APPROVED
Manufacturer's Pole Plan
Approved For Listing As A
Pre-Approved Drawing
WSDOT Bridge & Structures Office
By GB Date 11-9-09

THOMAS S. MACK
STATE OF WASHINGTON
42082
REGISTERED
PROFESSIONAL ENGINEER
11-5-09
EXPIRES 11-17-10

FOR APPROVAL ONLY

PRINT NAME: _____

SIGNATURE: _____

DATE: _____

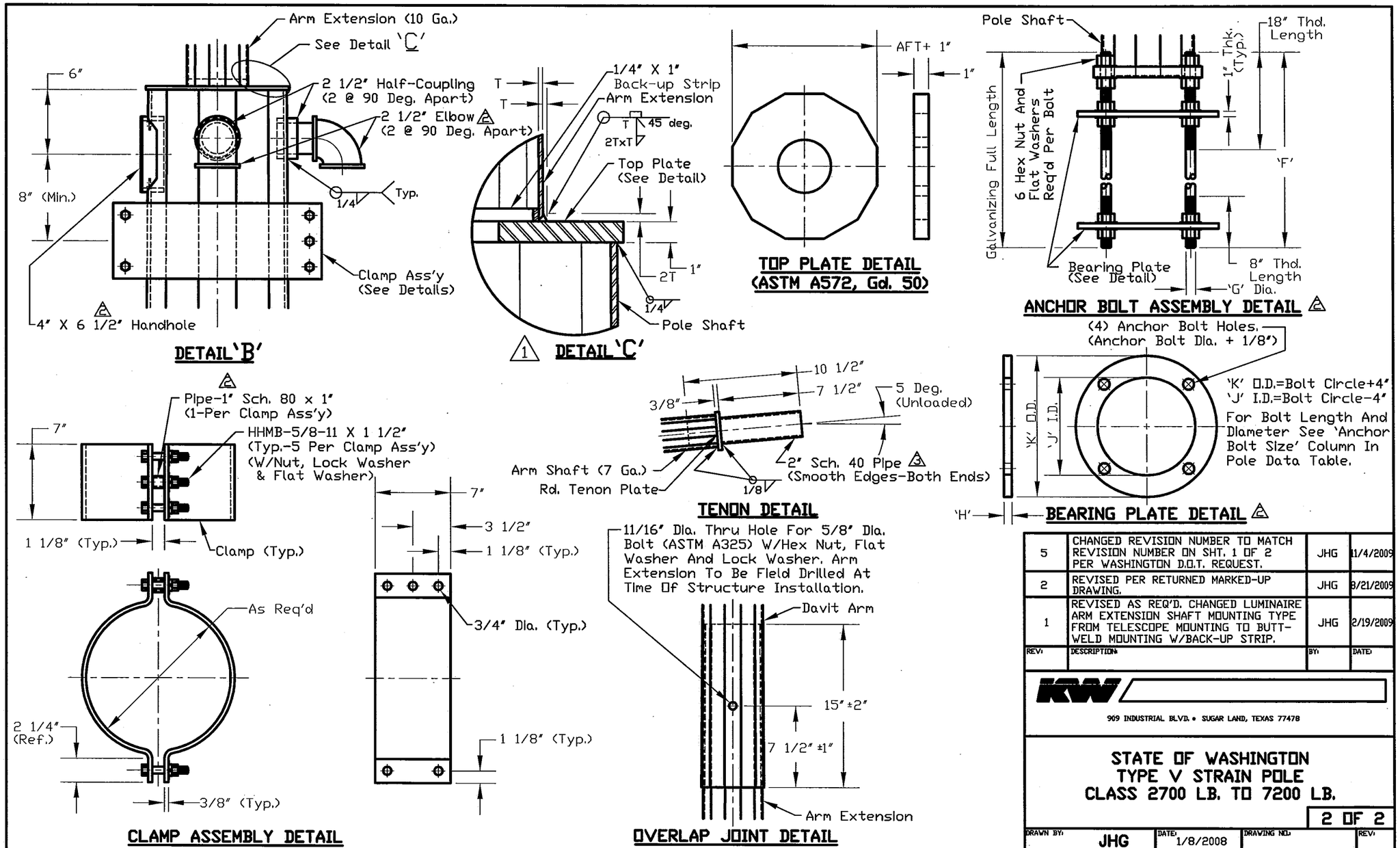

REV.	DESCRIPTION	BY	DATE
5	CHANGED REVISION NUMBER TO MATCH REVISION NUMBER ON SHT. 1 OF 2 PER WASHINGTON D.O.T. REQUEST.	JHG	11/4/2009
2	REVISED PER RETURNED MARKED-UP DRAWING.	JHG	8/21/2009
1	REVISED AS REQ'D. CHANGED LUMINAIRE ARM EXTENSION SHAFT MOUNTING TYPE FROM TELESCOPE MOUNTING TO BUTT-WELD MOUNTING W/BACK-UP STRIP.	JHG	2/19/2009

KW
909 INDUSTRIAL BLVD. • SUGAR LAND, TEXAS 77478

STATE OF WASHINGTON
TYPE V STRAIN POLE
CLASS 2700 LB. TO 7200 LB.

2 OF 2

DRAWN BY:	DATE:	DRAWING NO.	REV.
JHG	1/8/2008	10-200-SP-2	5
APPROVED BY:	DATE:		

E:\CAD\10 Submittal Drawings\10-200\10-200-SP-2-5 (2 OF 2) .dwg, 11/4/2009 3:03:06 PM, jim.grein