APPROVED
Manufacturer's Pole Plan
Approved For Listing As A
Pre-Approved Drawing
WSDOT Bridge & Structures Office
By GB Date 11-9-09

THOMAS S. MACH
STATE OF WASHINGTON
42082
REGISTERED
PROFESSIONAL ENGINEER
11-5-09

FOR APPROVAL ONLY

PRINT NAME: _____

SIGNATURE: _____

DATE: _____

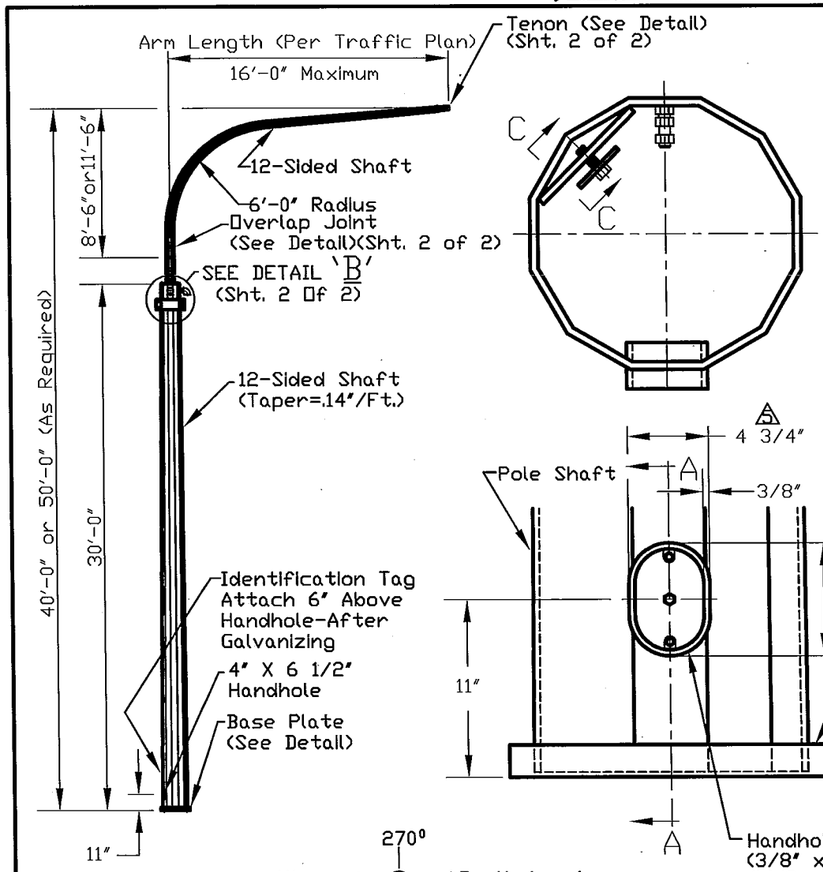

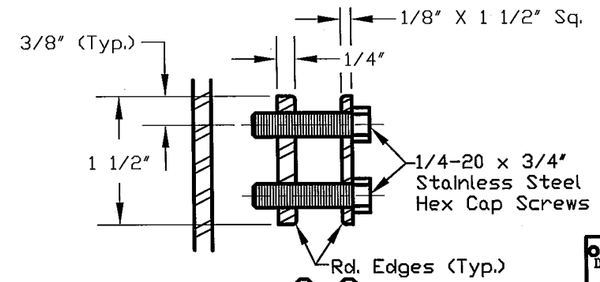

SECTION C-C
CONDUCTOR MTG. BRACKET

NOTES:

Weld: Welding Of Structures Shall Be In Accordance With The Current AWS Structural Welding Code D1.1: Longitudinal Seam Welds Are 60% Minimum Penetration Except In 6 Inches From End Of Flange Which Is To Be 100% Penetration. (4)

Finish: All Components To Be Hot Dip Galvanized As Per ASTM A123 & A153.

KW INDUSTRIES
DWG. NO. 10-200-SP-1
STRAIN POLE TYPE IV FAB.
LOAD CLASS XXXX LBS. MM/YY

I.D. TAG DETAIL

MAT'L-14 GA. ALUMINUM SECURE TO POLE WITH TWO 1/8" SS RIVETS OR SCREWS. LETTERS TO BE STAMPED OR ENGRAVED. MINIMUM LETTER HEIGHT=3/16".

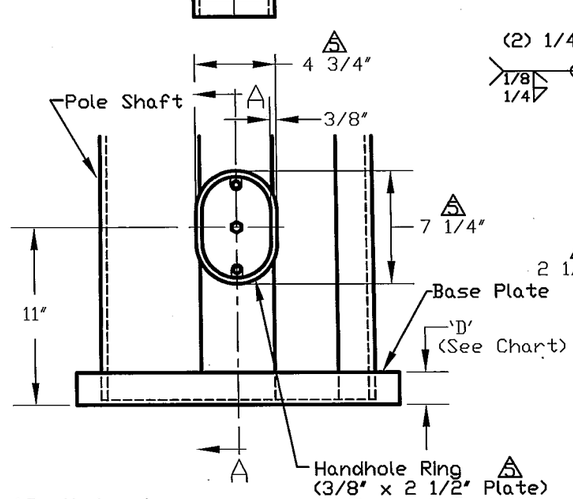

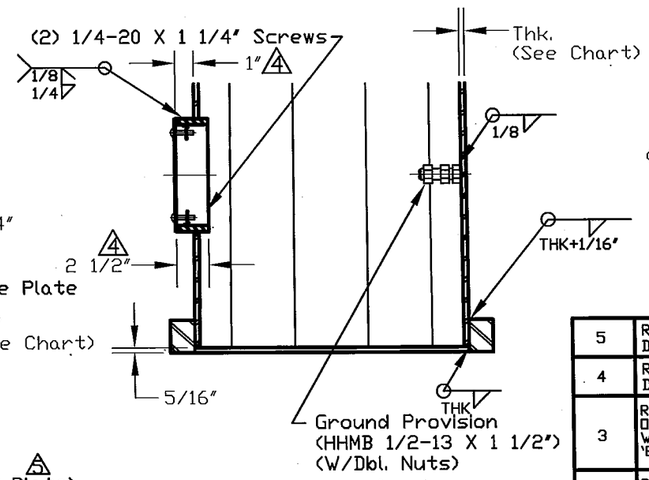

SECTION A-A

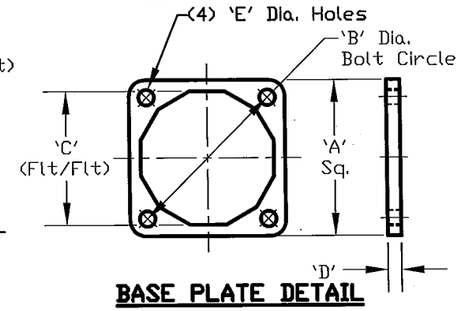

BASE PLATE DETAIL

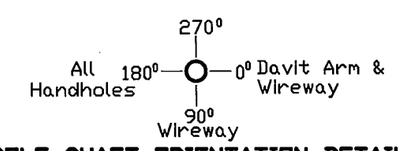

POLE SHAFT ORIENTATION DETAIL

Pole Class	POLE SHAFT AFB* (In.)	AFT* (In.)	THK (In.)	Shaft Length (Ft.)	BASE PLATE (3) (1) 'A' (In.)	'B' (In.)	'C' (In.)	'D' (In.)	'E' (In.)	ANCHOR BOLTS (1) 'F' Length (In.)	'G' Dia. (In.)	BEARING PLATE (4) 'H' (In.)	'J' I.D. (In.)	'K' O.D. (In.)
2700 LB	12.0	7.8125	.3125	30.0	15.5	16.5	12.125	1.75	1.625	60.0	1.375	1	12.5	20.5
3700 LB	14.0	9.8125	.3125	30.0	18.0	19.0	14.125	1.75	1.75	60.0	1.50	1	15.0	23.0
4800 LB	14.0	9.8125	.3125	30.0	19.0	20.0	14.125	2.00	2.00	66.0	1.75	1	16.0	24.0
5600 LB	15.0	10.8125	.3125	30.0	20.0	21.0	15.125	2.00	2.00	66.0	1.75	1	17.0	25.0
6300 LB	16.0	11.8125	.3125	30.0	20.0	22.0	16.125	2.25	2.00	66.0	1.75	1	18.0	26.0
7200 LB	17.0	12.8125	.3125	30.0	20.0	22.0	17.125	2.25	2.00	66.0	1.75	1	18.0	26.0

*-AFB Across Flats @ Base of Shaft.
*-AFT Across Flats @ Top of Shaft.

MATERIAL DATA (UNLESS OTHERWISE NOTED)	
COMPONENT	GRADE
HANDHOLE RING PLATE (3)	ASTM A36, Gd. 36
TAPERED TUBES (1) (2)	ASTM A-572, A-1011, A-606, Gd. 50 (MIN.)
BASE PLATE	ASTM A-572, Gd. 42 (MIN.)
STRAIN CLAMP	ASTM A-36
ANCHOR BOLTS	ASTM F1554, Gd 105
CLAMP BOLTS	ASTM A-325,TYPE 1
NUTS	ASTM A-563-DH
FLAT WASHERS	ASTM F436

REV.	DESCRIPTION	BY	DATE
5	REVISED PER RETURNED MARKED-UP DRAWING.	JHG	10/20/2009
4	REVISED PER RETURNED MARKED-UP DRAWING.	JHG	3/20/2009
3	REVISED PER LACH ENGINEERING REVISIONS. ON POLE CLASS 3700 LB. 'A' DIMENSION WAS 17.0". ON POLE CLASS 5600 LB. 'E' DIMENSION WAS 1.75".	JHG	3/13/2009
2	REVISED PER LACH ENGINEERING REVISIONS. A-606 WAS A-607.	JHG	2/19/2009
1	REVISED PER LACH ENGINEERING REVISIONS.	JHG	10/8/2008

KW
909 INDUSTRIAL BLVD. • SUGAR LAND, TEXAS 77478

STATE OF WASHINGTON
TYPE V STRAIN POLE
CLASS 2700 LB. TO 7200 LB.

1 OF 2

DRAWN BY:	DATE:	DRAWING NO:	REV:
JHG	1/8/2008	10-200-SP-2	5
APPROVED BY:	DATE:		

E:\CAD\10 Submittal Drawings\10-200\10-200-SP-2-5 (1 OF 2) .dwg, 10/20/2009 9:12:23 AM, jim.grein