THOMAS S. LACH
STATE OF WASHINGTON
42082
REGISTERED
PROFESSIONAL ENGINEER
3/15/2014
Expires 11/17/2014

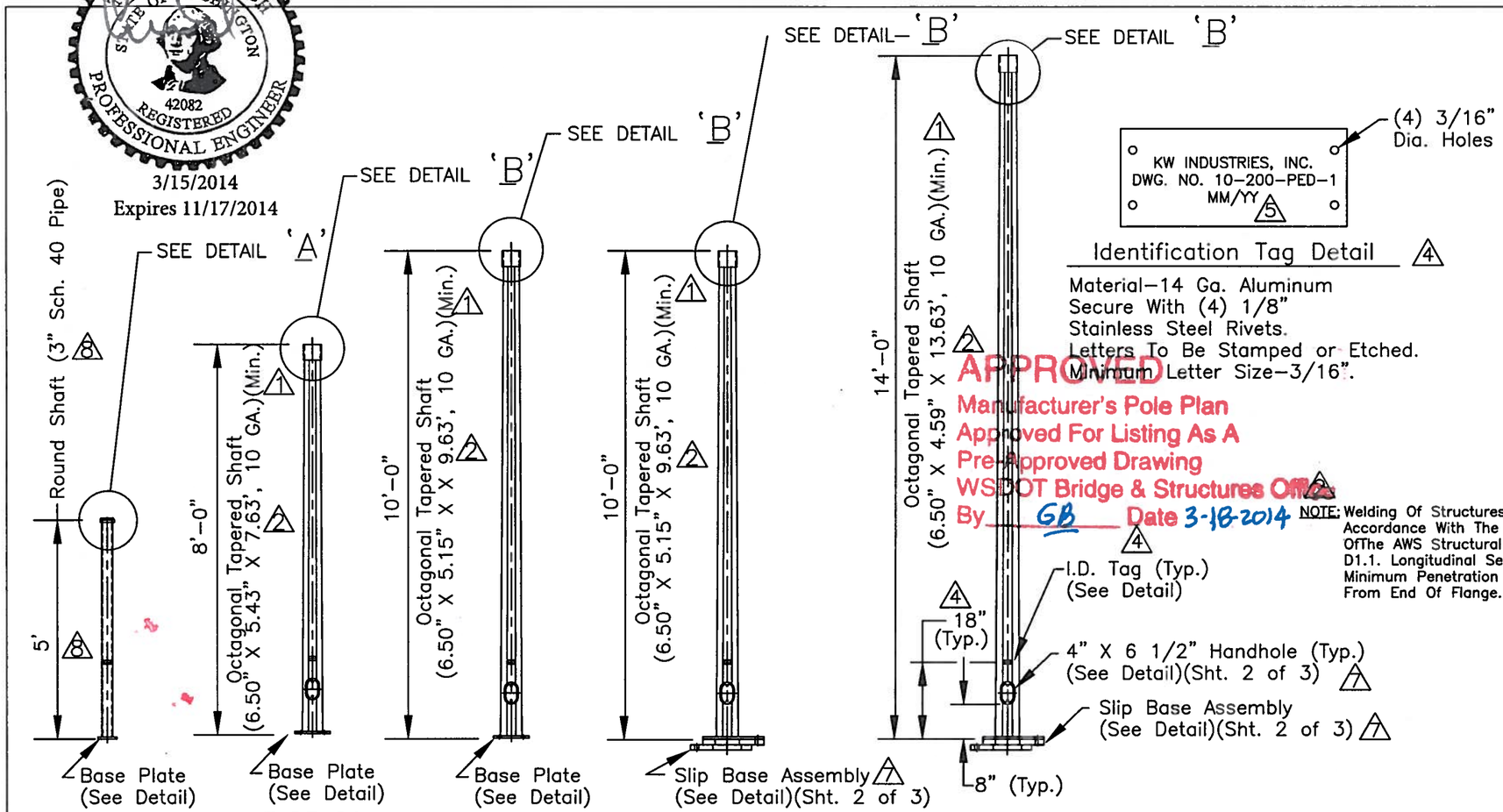

TYPE PPB STANDARD | TYPE PS STANDARD | TYPE I STANDARD | RAMP METER STANDARD | FLASHING BEACON STANDARD

Identification Tag Detail 4

Material–14 Ga. Aluminum
Secure With (4) 1/8" Stainless Steel Rivets.
Letters To Be Stamped or Etched.
Minimum Letter Size–3/16".

APPROVED
Manufacturer's Pole Plan
Approved For Listing As A
Pre-Approved Drawing
WSDOT Bridge & Structures Office
By GB Date 3-18-2014

NOTE: Welding Of Structures Shall Be In Accordance With The Latest Edition OfThe AWS Structural Welding Code D1.1. Longitudinal Seam Weld Is 60% Minimum Penetration Except 6 Inches From End Of Flange.

NOTES:
Galvanized As Per ASTM A123 & F2329. 8

MATERIAL DATA (UNLESS OTHERWISE NOTED)		
POLE TYPE	COMPONENT	GRADE
PPB POST	POLE SHAFT	ASTM A53, GR B ASTM A500, GR B
	BASE PLATE	ASTM A36
PS POLE	POLE SHAFT 1	ASTM A572, A1011 A606, GR 50 (MIN.)
	BASE PLATE	ASTM A36
TYPE I	POLE SHAFT 1	ASTM A572, A1011 A606, GR 50 (MIN.)
	BASE PLATE	ASTM A36
RAMP METER	POLE SHAFT 1	ASTM A572, A1011 A606, GR 50 (MIN.)
	BASE PLATE	ASTM A36
FLASHING BEACON	POLE SHAFT 1	ASTM A572, A1011 A606, GR 50 (MIN.)
	BASE PLATE	ASTM A36
3	HANDHOLE RING PLATE	ASTM A36, GR 36
	ANCHOR BOLTS	ASTM F1554, GR 55
	CLAMPING BOLTS	ASTM A325,TYPE 1
	NUTS	ASTM A563–DH
	FLAT WASHERS	ASTM F436
9	KEEPER PLATE	ASTM A563, GR. 33 (COATING: G90)

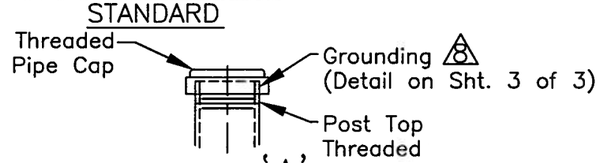

DETAIL 'A'
TYPE PPB POLE

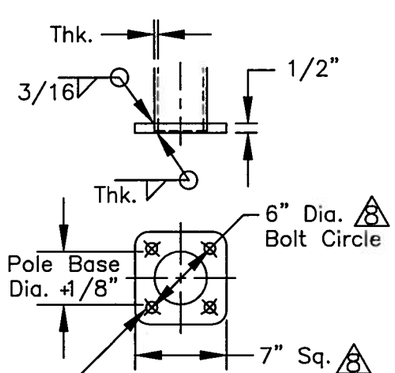

BASE PLATE DETAIL
(TYPE PPB POLE)

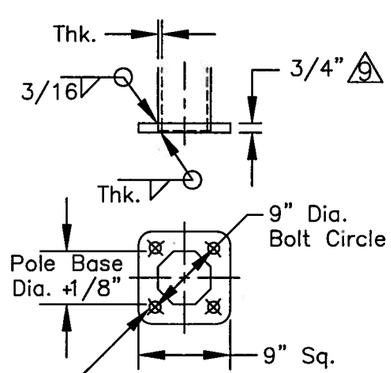

BASE PLATE DETAIL
(TYPE PS & TYPE I POLE)

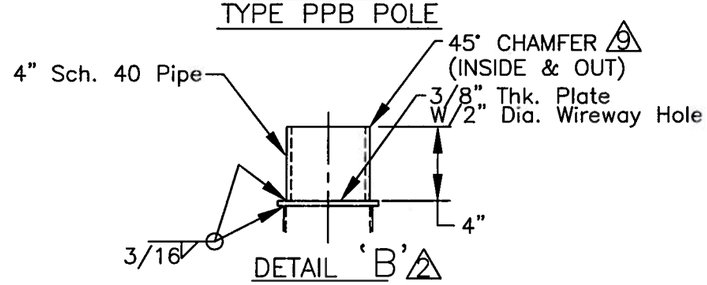

DETAIL 'B' 2
TYPE PS, I, RM & FLASHING BEACON POLE

REV:	DESCRIPTION:	BY:	DATE:
9	REVISED PER MARKUPS ON ERF# 12691	IF	3/6/2014
8	REVISED PER MARKUPS ON ERF# 12396	IF	12/12/2013
7	REVISED PER MARKUPS ON ERF# 8826	IF	6/15/2011
6	REVISED PER MARKUPS ON ERF# 8514	IF	3/23/2011
5	REVISED PER GARY BEDI E-MAIL.	JHG	12/1/2009
4	ADDED I.D. TAG	JHG	11/24/2009
3	REVISED PER RETURNED MARKED-UP DRAWING.	JHG	10/20/2009
2	REVISED PER RETURNED MARKED-UP DRAWING. INCREASED SHAFTS AS SHOWN TO ACCOMMODATE LARGER HANDHOLE. CHANGE DETAIL 'B' AS SHOWN.	JHG	8/19/2009
1	REVISED AS REQUIRED. A606 WAS A607. CHANGED WORDING OF THICKNESS OF SHAFTS–ADDED MINIMUM.	JHG	2/20/2009

KW
909 INDUSTRIAL BLVD. •SUGAR LAND, TEXAS 77478

STATE OF WASHINGTON
PEDESTRIAN POLES

1 OF 3

DRAWN BY:	DATE:	DRAWING NO.:	REV:
JHG	1/9/2008	10-200-PED-1	9
APPROVED BY:	DATE:		