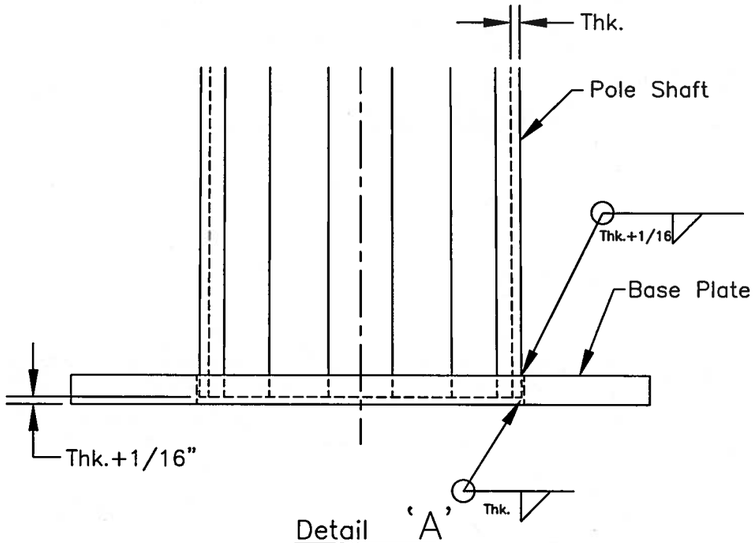

Detail 'A'

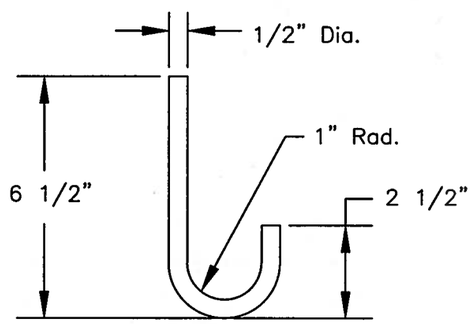

J–Hook Detail

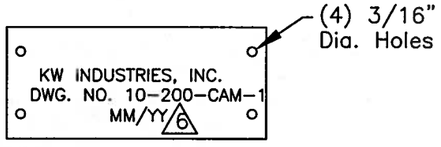

Identification Tag Detail 5

Material–14 Ga. Aluminum
Secure With (4) 1/8"
Stainless Steel Rivets.
Letters To Be Stamped or Etched.
Minimum Letter Size–3/16".

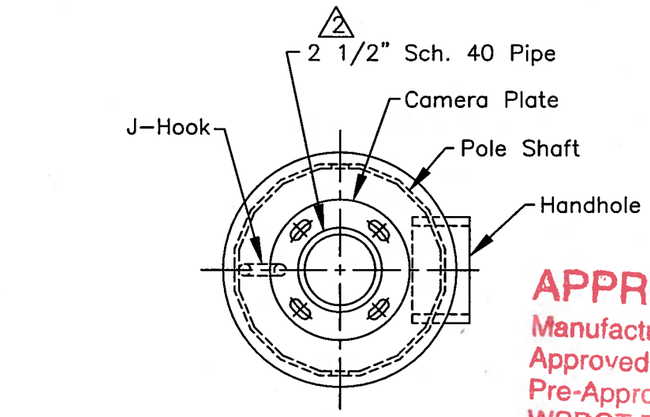

APPROVED
Manufacturer's Pole Plan
Approved For Listing As A
Pre-Approved Drawing
WSDOT Bridge & Structures Office
By GB Date 4-15-2014

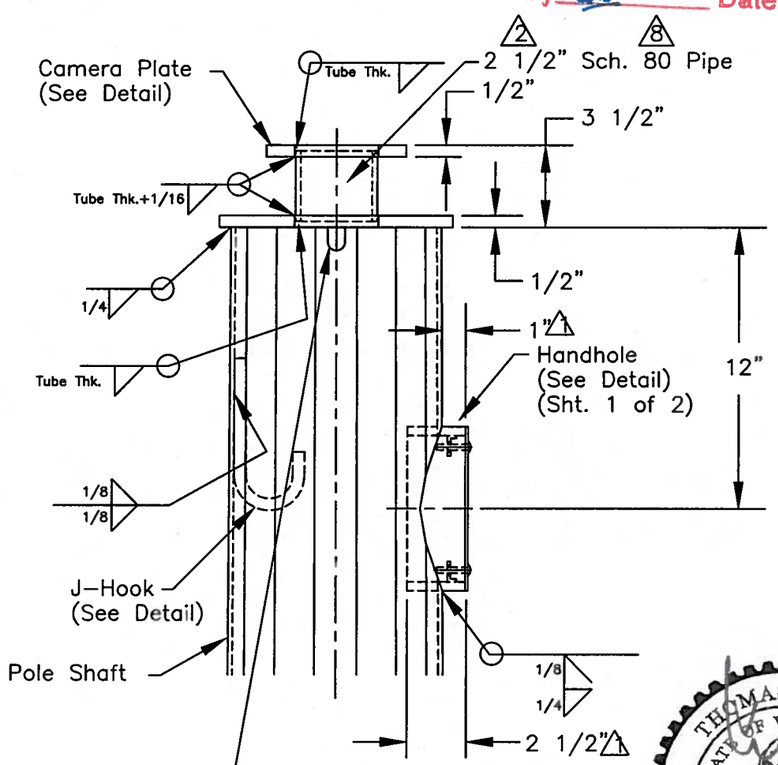

Detail 'B'

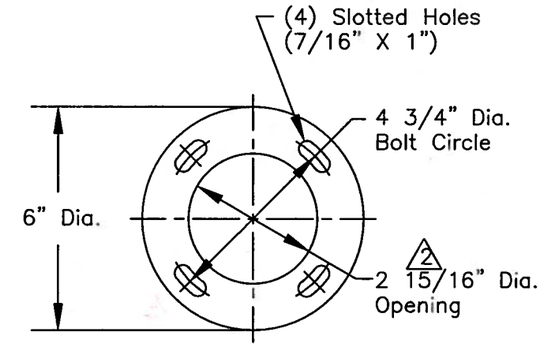

Camera Plate Detail

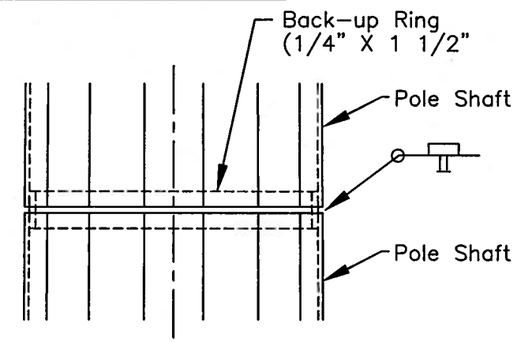

Butt Weld Detail 'C'
(No Splice In Bottom Third Of Pole Height)

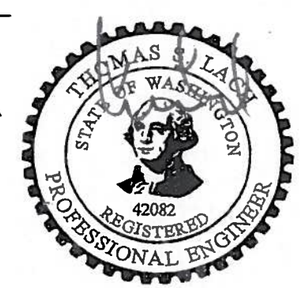

4/11/2014
Expires 11/17/2014

REV:	DESCRIPTION:	BY:	DATE:
8	REVISED DWG MARKUPS, ERF# 12404	IF	12/16/2013
7	REVISED DWG MARKUPS, ERF# 12394	IF	12/12/2013
6	REVISED PER GARY BEDI E–MAIL.	JHG	12/1/2009
5	ADDED I.D.TAG.	JHG	11/24/2009
4	CHANGED REVISION NUMBER TO MATCH REVISION NUMBER ON SHT. 1 OF 2 PER WASHINGTON D.O.T. REQUEST.	JHG	11/4/2009
2	REVISED PER RETURNED MARKED–UP DRAWING.	JHG	10/20/2009
1	REVISED PER RETURNED MARKED–UP DRAWING.	JHG	8/22/2009

KW
909 INDUSTRIAL BLVD. •SUGAR LAND, TEXAS 77478

STATE OF WASHINGTON
CAMERA POLE

SHT. 2 OF 2

DRAWN BY:	DATE:	DRAWING NO.:	REV:
JHG	1/15/2008	10–200–CAM–1	8
APPROVED BY:	DATE:		