STATION	SIGN NAME	STRUCTURE NAME	FOUNDATION TYPE
71+00	NB ADVANCED SIGN #1	CANTILEVER NO. 1	TYPE 1
96+00	NB DYNAMIC RATE SIGN #1	BRIDGE MOUNTED SIGN BRACKET NO. 1	N/A
140+25	NB ADVANCED SIGN #2	CANTILEVER NO. 2	TYPE 1
165+50	NB DYNAMIC RATE SIGN #2	CANTILEVER NO. 3	TYPE 1
219+05	NB ADVANCED SIGN #3	CANTILEVER NO. 4	TYPE 1
243+05	NB DYNAMIC RATE SIGN #3	CANTILEVER NO. 5	TYPE 1
264+30	NB TRANSPONDER READER #3	EXISTING BRIDGE MOUNTED SIGN BRACKET	N/A
313+30	NB ADVANCED SIGN #4	BRIDGE MOUNTED SIGN BRACKET NO. 2	N/A
350+20	NB DYNAMIC RATE SIGN #4	CANTILEVER NO. 6	TYPE 1
371+20	SB DYNAMIC RATE SIGN #1	CANTILEVER NO. 7	TYPE 1
371+20	NB TRANSPONDER READER #4	EXISTING SIGN BRIDGE	N/A
396+95	SB ADVANCED SIGN #1	CANTILEVER NO. 8	TYPE 1
411+00	NB ADVANCED SIGN #5	CANTILEVER NO. 9	TYPE 1
438+60	NB DYNAMIC RATE SIGN #5	CANTILEVER NO. 10	TYPE 1
469+95	SB DYNAMIC RATE SIGN #2	CANTILEVER NO. 11	TYPE 1
495+50	SB ADVANCED SIGN #2	CANTILEVER NO. 12	TYPE 1
549+00	NB ADVANCED SIGN #6	BRIDGE MOUNTED SIGN BRACKET NO. 3	N/A
575+60	NB DYNAMIC RATE SIGN #6	CANTILEVER NO. 13	TYPE 1
617+75	SB DYNAMIC RATE SIGN #3	CANTILEVER NO. 14	TYPE 1
642+75	SB ADVANCED SIGN #3	CANTILEVER NO. 15	TYPE 1
723+10	SB DYNAMIC RATE SIGN #4	CANTILEVER NO. 16	TYPE 1
748+15	SB ADVANCED SIGN #4	CANTILEVER NO. 17	TYPE 1

TYPE 1 FOUNDATION

STRUCTURE TYPE	SPAN LENGTH ("S")	SHAFT DIAMETER	DEPTH ("Z")	FOUNDATION REINFORCEMENT	
				SIZE ("X")	NUMBER "Y"
CANTILEVER	LESS THAN 20'-0"	4'-6"	12'-6"	9	12
	20'-0" TO 30'-0"	4'-6"	15'-0"	9	16
SIGN BRIDGE	LESS THAN 60'-0"	4'-6"	15'-6"	9	18
	60'-0" TO 90'-0"	4'-6"	19'-0"	9	20
	90'-0" TO 120'-0"	5'-0"	21'-9"	11	15 BUNDLED PAIRS
	120'-0" TO 150'-0"	5'-0"	23'-6"	11	17 BUNDLED PAIRS

TYPE 2 FOUNDATION

STRUCTURE TYPE	SHAFT DIAMETER	DEPTH ("Z")	FOUNDATION REINFORCEMENT		
			SIZE ("X")	SPACING ("Y1")	SPACING ("Y2")
CANTILEVER	LESS THAN 20'-0"	7'-3"	9	8	4
	20'-0" TO 30'-0"	9'-6"	9	12	8
SIGN BRIDGE	LESS THAN 60'-0"	9'-0"	9	12	8
	60'-0" TO 90'-0"	11'-0"	9	16	12
	90'-0" TO 120'-0"	12'-9"	11	14	10
	120'-0" TO 150'-0"	13'-6"	11	16	14

TYPE 3 FOUNDATION

STRUCTURE TYPE	SHAFT DIAMETER	DEPTH ("Z")	FOUNDATION REINFORCEMENT		
			SIZE ("X")	SPACING ("Y1")	SPACING ("Y2")
CANTILEVER	LESS THAN 20'-0"	11'-0"	9	8	4
	20'-0" TO 30'-0"	13'-9"	9	12	8
SIGN BRIDGE	LESS THAN 60'-0"	12'-9"	9	12	8
	60'-0" TO 90'-0"	15'-6"	9	16	12
	90'-0" TO 120'-0"	17'-9"	11	14	10
	120'-0" TO 150'-0"	19'-6"	11	16	14

CANTILEVER

SPAN LENGTH	POST Ⓥ				BEAM A Ⓥ				BEAM B Ⓥ					POST BASE					BOLTED SPLICE						MAXIMUM SIGN AREA
"S"	"H"	"A"	"B"	"T1"	"L1"	"B"	"C"	"T2"	"L2"	"B"	"C"	"T2"	CAMBER	"D1"	"S5"	"S6"	"T3"	"T6"	"S1"	"S2"	"S3"	"S4"	"T4"	"T5"	
LESS THAN 20'-0"	30'-0" OR LESS	1'-6"	2'-0"	3/8"	6'-0"	2'-0"	2'-0"	3/8"	14'-0"	2'-0"	2'-0"	3/8"	2"	1 1/2"	4	4	2"	3/4"	5	-	5	-	2"	-	168 SQ. FT.
20'-0" TO 30'-0"	30'-0" OR LESS	1'-6"	2'-0"	1/2"	6'-0"	2'-0"	2'-0"	3/8"	14'-0" TO 24'-0"	2'-0"	2'-0"	3/8"	3 1/2"	2"	4	4	2"	3/4"	4	2	4	2	2 1/2"	-	252 SQ. FT.

SIGN BRIDGE

SPAN LENGTH	POSTS				BEAM A Ⓥ				BEAM B Ⓥ				BEAM C Ⓥ					POST BASE					BOLTED SPLICE #1 L1 TO L2 AND L1 TO L3						BOLTED SPLICE #2 L2 TO L3						MAXIMUM SIGN AREA
"S"	"H"	"A"	"B"	"T1"	"L1"	"B"	"C"	"T2"	"L2"	"B"	"C"	"T2"	"L3"	"B"	"C"	"T2"	CAMBER	"D1"	"S5"	"S6"	"T3"	"T6"	"S1"	"S2"	"S3"	"S4"	"T4"	"T5"	"S1"	"S2"	"S3"	"S4"	"T4"	"T5"	
LESS THAN 60'-0"	30'-0" OR LESS	1'-6"	2'-0"	1/2"	6'-0"	2'-0"	2'-0"	3/8"	0'-0"	-	-	-	13'-0" TO 48'-0"	2'-0"	2'-0"	3/8"	2 3/4"	1/2"	4	4	2 1/4"	3/4"	5	-	5	-	2"	5/8"	-	-	-	-	-	-	500 SQ. FT.
60'-0" TO 75'-0"	30'-0" OR LESS	1'-6"	2'-3"	1/2"	6'-0"	2'-3"	2'-0"	3/8"	9'-0" TO 14'-0"	2'-3"	2'-0"	3/8"	30'-0" TO 35'-0"	2'-3"	2'-0"	3/8"	3 3/4"	3/4"	4	4	2 1/2"	3/4"	6	-	5	-	2"	5/8"	6	-	5	-	2 1/4"	3/4"	600 SQ. FT.
75'-0" TO 90'-0"	30'-0" OR LESS	1'-6"	2'-3"	5/8"	6'-0"	2'-3"	2'-0"	3/8"	14'-0" TO 19'-0"	2'-3"	2'-0"	3/8"	35'-0" TO 40'-0"	2'-3"	2'-0"	3/8"	5"	3/4"	4	4	2 1/2"	3/4"	6	-	5	-	2"	5/8"	6	-	5	-	2 1/4"	3/4"	750 SQ. FT.
90'-0" TO 105'-0"	30'-0" OR LESS	1'-9"	2'-6"	5/8"	6'-0"	2'-6"	2'-3"	1/2"	19'-0" TO 26'-6"	2'-6"	2'-3"	1/2"	40'-0"	2'-6"	2'-3"	1/2"	6"	3/4"	4	5	2 1/2"	1"	7	-	6	-	2"	5/8"	7	5	6	4	2 1/2"	1"	750 SQ. FT.
105'-0" TO 120'-0"	30'-0" OR LESS	1'-9"	2'-6"	5/8"	6'-0"	2'-6"	2'-3"	1/2"	26'-6" TO 34'-0"	2'-6"	2'-3"	1/2"	40'-0"	2'-6"	2'-3"	1/2"	7 1/2"	3/4"	4	5	2 1/2"	1"	7	-	6	-	2"	5/8"	7	5	6	4	2 1/2"	1"	850 SQ. FT.
120'-0" TO 135'-0"	30'-0" OR LESS	2'-0"	2'-6"	5/8"	6'-0"	2'-6"	2'-6"	1/2"	34'-0" TO 41'-6"	2'-6"	2'-6"	1/2"	40'-0"	2'-6"	2'-6"	1/2"	8 1/2"	2"	4	5	2 1/2"	1"	7	-	7	-	2"	5/8"	7	5	7	5	2 1/2"	1"	800 SQ. FT.
135'-0" TO 150'-0"	30'-0" OR LESS	2'-0"	2'-6"	5/8"	6'-0"	2'-6"	2'-6"	1/2"	41'-6" TO 49'-0"	2'-6"	2'-6"	1/2"	40'-0"	2'-6"	2'-6"	1/2"	10 1/2"	2"	4	5	2 1/2"	1"	7	-	7	-	2"	5/8"	7	5	7	5	2 1/2"	1"	800 SQ. FT.

FILE NAME				
TIME				
DATE				
PLOTTED BY				
DESIGNED BY				
ENTERED BY				
CHECKED BY				
PROJ. ENGR.				
REGIONAL ADM.	REVISION	DATE	BY	

REGION NO.	STATE	FED.AID PROJ.NO.
10	WASH	
JOB NUMBER		
CONTRACT NO.		LOCATION NO.

P.E. STAMP BOX DATE

P.E. STAMP BOX DATE

HNTB

Perteet Inc.
425-252-7700 | 1-800-615-9900
2707 Colby Avenue, Suite 900
Everett, Washington 98201

SR 167 MP ??.?? TO MP ??.??
SR167
HOT LANES
KING COUNTY JUNE 2006

FOUNDATION AND STRUCTURE SCHEDULES

S2

SHEET OF SHEETS

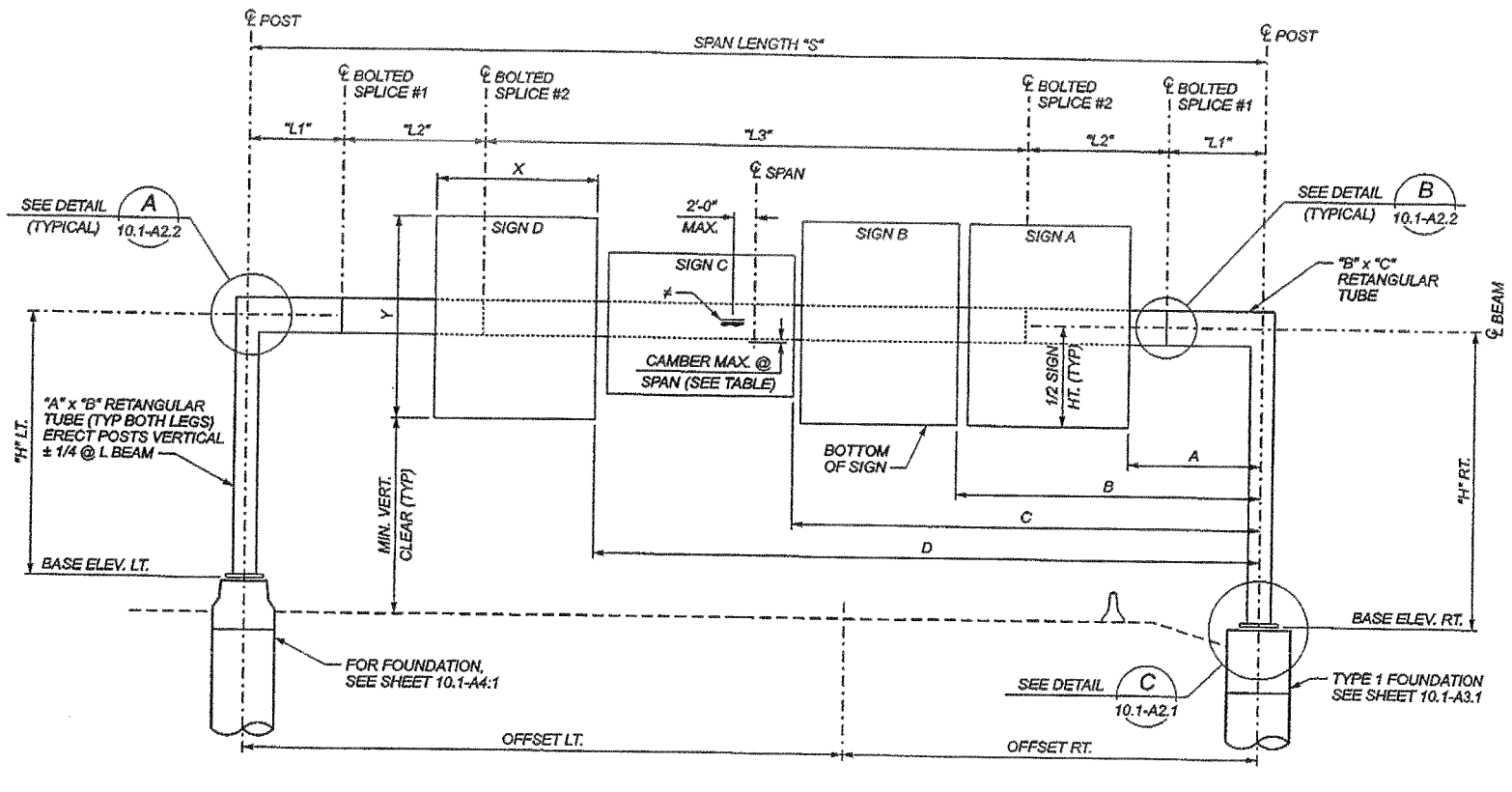

≠ STOCKBRIDGE TYPE 31 LBS. VIBRATION DAMPER. MOUNT ON BACKSIDE OF BEAM.

ELEVATION

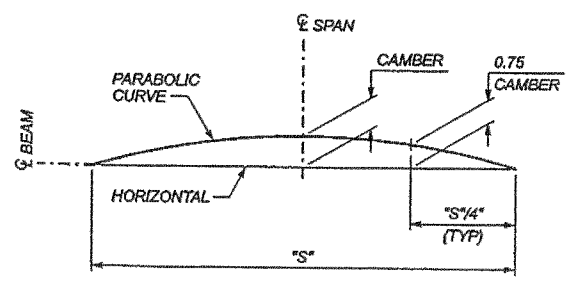

BEAM CAMBER DIAGRAM

LEGEND

B / 15 — IDENTIFIES SECTION, VIEW OR DETAIL
TAKEN OR SHOWN ON BRIDGE SHEET 15

B / — TAKEN OR SHOWN ON THE SAME SHEET

GENERAL NOTES

1. ALL MATERIAL AND WORKMANSHIP SHALL BE IN ACCORDANCE WITH THE REQUIREMENTS OF THE WASHINGTON STATE DEPARTMENT OF TRANSPORTATION STANDARD SPECIFICATIONS FOR ROAD, BRIDGE AND MUNICIPAL CONSTRUCTION (ENGLISH) DATED 2002 AND AMENDMENTS.
2. ALL BUTT JOINT WELDS SHALL BE FULL PENETRATION GROOVE WELDS WITH BACK-UP PLATES OF ¼" MIN. THICKNESS.
3. THE BACK-UP PLATES FOR ALL FULL PENETRATION WELDS SHALL BE WELDED CONTINUOUSLY TO THE JOINED PIECES. THIS CAN BE DONE BY EITHER A CONTINUOUS FILLET WELD ON THE BACK SIDE OF THE PIECE, OR BY A CONTINUOUS WELD IN THE ROOT OF THE FULL PENETRATION WELD.
4. ALL BOLTS, RODS AND RELATED HARDWARE SHALL BE GALVANIZED AFTER FABRICATION PER AASHTO M 232.
5. STEEL SURFACES SHALL BE GALVANIZED AFTER FABRICATION IN ACCORDANCE WITH AASHTO M 111. ALL EXTERIOR STEEL SURFACES SHALL BE PAINTED IN ACCORDANCE WITH THE SPECIAL PROVISIONS.
6. SIGN PANELS AS SHOWN IN THE CONTRACT PLANS SHALL BE INSTALLED WITH THE SIGN STRUCTURE OR IMMEDIATELY AFTER THE SIGN IS ERECTED.
7. FABRICATE BEAM TO PROVIDE SMOOTH PARABOLIC CAMBER CURVE. SEE CAMBER DIAGRAM. DO NOT SHIM AT BOLTED SPLICES.
8. FABRICATE POSTS STRAIGHT.
9. MATERIALS SPECIFICATIONS:

ALL STRUCTURAL STEEL	ASTM A572 GR. 50 OR ASTM A 588
ANCHOR RODS	ASTM F 1554 GR. 105
HANDHOLE COVER SCREWS	ASTM F 593 GR. 1
SPLICE BOLTS	AASHTO M 164
SIGN BRACKET BOLTS	ASTM A 307
MOUNTING BEAM BOLTS	AASHTO M 164
COVER PLATES	ASTM A36

10. BASE ELEVATIONS AND POST HEIGHTS SHOWN ARE APPROXIMATE. THE CONTRACTOR SHALL FIELD MEASURE ANCHOR BOLT LOCATIONS, ELEVATIONS AND ALL STEEL STRUCTURE DIMENSIONS PRIOR TO THE FABRICATION OF THE STRUCTURAL STEEL AND NOTIFY THE ENGINEER OF ANY DISCREPANCIES. FINAL VALUES WILL BE FURNISHED BY THE ENGINEER PRIOR TO FABRICATION.
11. SEE OTHER PLANS FOR CONDUIT LOCATIONS, CONDUCTOR PENETRATIONS AND ADDITIONAL HAND HOLES.
12. POSTS, BASE PLATES, BEAMS AND SPLICE PLATES ARE MAIN LOAD CARRYING TENSILE MEMBERS OR TENSION COMPONENTS OF FLEXURAL MEMBERS AND SHALL MEET THE LONGITUDINAL CHARPY V-NOTCH TESTS AS DESCRIBED IN SECTION 6-03.2 FOR AASHTO M 270 MATERIAL. NON-DESTRUCTIVE TEST ACCEPTANCE CRITERIA TO CONFORM TO TENSILE MEMBERS WITH CYCLIC LOAD.

DESIGN CRITERIA

1. THE SIGN STRUCTURE DESIGN AND ANALYSIS HAS BEEN DONE IN ACCORDANCE WITH AASHTO STANDARD SPECIFICATIONS FOR STRUCTURAL SUPPORTS FOR HIGHWAY SIGNS, LUMINAIRES AND TRAFFIC SIGNALS - FOURTH EDITION - DATED 2001. 90MPH BASIC WIND SPEED AND 50 YEAR DESIGN LIFE WERE ASSUMED. THE STRUCTURE CONFORMS TO FATIGUE DESIGN, CATEGORY 1.
2. THE MAXIMUM SIGN AREA ON A STRUCTURE SHALL BE AS NOTED.

FILE NAME					
TIME					
DATE					
PLOTTED BY					
DESIGNED BY					
ENTERED BY					
CHECKED BY					
PROJ. ENGR.					
REGIONAL ADM.	REVISION	DATE	BY		

REGION NO.	STATE	FED.AID PROJ.NO.
10	WASH	
JOB NUMBER		
CONTRACT NO.		LOCATION NO.

P.E. STAMP BOX — DATE

P.E. STAMP BOX — DATE

HNTB

Perteet Inc.
425-252-7700 | 1-800-615-9900
2707 Colby Avenue, Suite 900
Everett, Washington 98201

SR 167 MP ??.?? TO MP ??.??
SR167
HOT LANES
KING COUNTY JUNE 2006

EXISTING SIGN BRIDGE - LAYOUT

S3

SHEET OF SHEETS

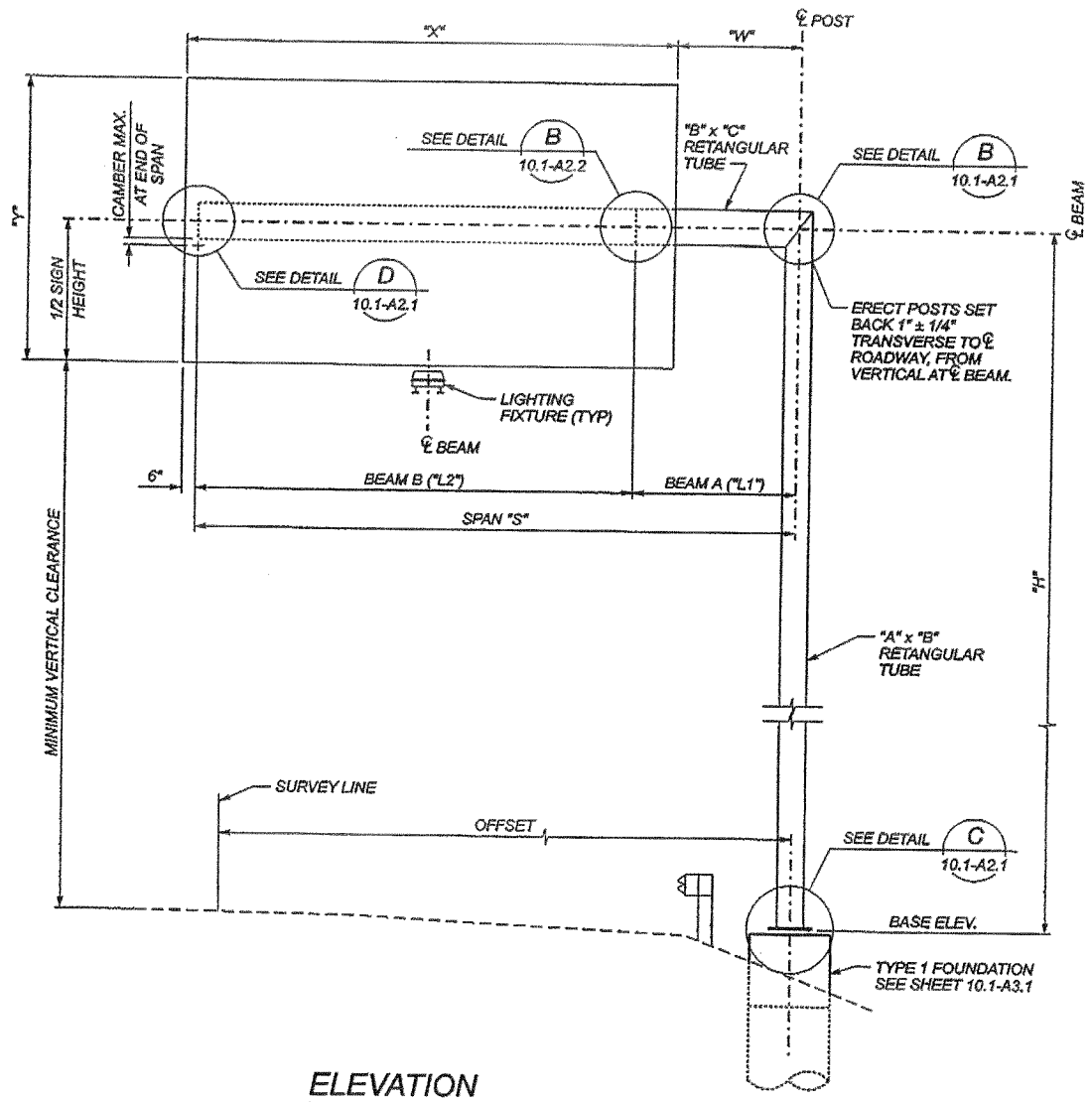

ELEVATION

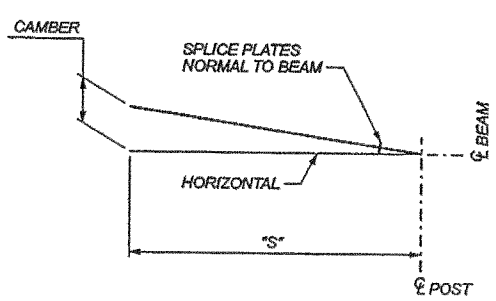

BEAM CAMBER DIAGRAM

LEGEND

B / 15 — IDENTIFIES SECTION, VIEW OR DETAIL; TAKEN OR SHOWN ON BRIDGE SHEET 15

B / — TAKEN OR SHOWN ON THE SAME SHEET

GENERAL NOTES

1. ALL MATERIAL AND WORKMANSHIP SHALL BE IN ACCORDANCE WITH THE REQUIREMENTS OF THE WASHINGTON STATE DEPARTMENT OF TRANSPORTATION STANDARD SPECIFICATIONS FOR ROAD, BRIDGE AND MUNICIPAL CONSTRUCTION (ENGLISH) DATED 2002 AND AMENDMENTS.
2. ALL BUTT JOINT WELDS SHALL BE FULL PENETRATION GROOVE WELDS WITH BACK-UP PLATES OF ¼" MIN. THICKNESS.
3. THE BACK-UP PLATES FOR ALL FULL PENETRATION WELDS SHALL BE WELDED CONTINUOUSLY TO THE JOINED PIECES. THIS CAN BE DONE BY EITHER A CONTINUOUS FILLET WELD ON THE BACK SIDE OF THE PIECE, OR BY A CONTINUOUS WELD IN THE ROOT OF THE FULL PENETRATION WELD.
4. ALL BOLTS, RODS AND RELATED HARDWARE SHALL BE GALVANIZED AFTER FABRICATION PER AASHTO M 232.
5. STEEL SURFACES SHALL BE GALVANIZED AFTER FABRICATION IN ACCORDANCE WITH AASHTO M 111. ALL EXTERIOR STEEL SURFACES SHALL BE PAINTED IN ACCORDANCE WITH THE SPECIAL PROVISIONS.
6. SIGN PANELS AS SHOWN IN THE CONTRACT PLANS SHALL BE INSTALLED WITH THE SIGN STRUCTURE OR IMMEDIATELY AFTER THE SIGN IS ERECTED.
7. FABRICATE BEAM TO PROVIDE SMOOTH PARABOLIC CAMBER CURVE. SEE CAMBER DIAGRAM. DO NOT SHIM AT BOLTED SPLICES.
8. FABRICATE POSTS STRAIGHT.
9. MATERIALS SPECIFICATIONS:

ALL STRUCTURAL STEEL	ASTM A572 GR. 50 OR ASTM A 588
ANCHOR RODS	ASTM F 1554 GR. 105
HANDHOLE COVER SCREWS	ASTM F 593 GR. 1
SPLICE BOLTS	AASHTO M 164
SIGN BRACKET BOLTS	ASTM A 307
MOUNTING BEAM BOLTS	AASHTO M 164
COVER PLATES	ASTM A36

10. BASE ELEVATIONS AND POST HEIGHTS SHOWN ARE APPROXIMATE. THE CONTRACTOR SHALL FIELD MEASURE ANCHOR BOLT LOCATIONS, ELEVATIONS AND ALL STEEL STRUCTURE DIMENSIONS PRIOR TO THE FABRICATION OF THE STRUCTURAL STEEL AND NOTIFY THE ENGINEER OF ANY DISCREPANCIES. FINAL VALUES WILL BE FURNISHED BY THE ENGINEER PRIOR TO FABRICATION.
11. SEE OTHER PLANS FOR CONDUIT LOCATIONS, CONDUCTOR PENETRATIONS AND ADDITIONAL HAND HOLES.
12. POSTS, BASE PLATES, BEAMS AND SPLICE PLATES ARE MAIN LOAD CARRYING TENSILE MEMBERS OR TENSION COMPONENTS OF FLEXURAL MEMBERS AND SHALL MEET THE LONGITUDINAL CHARPY V-NOTCH TESTS AS DESCRIBED IN SECTION 6-03.2 FOR AASHTO M 270 MATERIAL. NON-DESTRUCTIVE TEST ACCEPTANCE CRITERIA TO CONFORM TO TENSILE MEMBERS WITH CYCLIC LOAD.

DESIGN CRITERIA

1. THE DESIGN AND ANALYSIS OF THE SIGN STRUCTURES HAS BEEN DONE IN ACCORDANCE WITH AASHTO STANDARD SPECIFICATIONS FOR STRUCTURAL SUPPORTS FOR HIGHWAY SIGNS, LUMINAIRES AND TRAFFIC SIGNALS - FOURTH EDITIN - DATED 2001, USING BASIC WIND SPEED OF 90 MPH AND 50 YEARS OF DESIGN LIFE. FATIGUE DESIGN OF THE STRUCTURE CONFORMS TO FATIGUE CATEGORY 1 OF THE SPECIFIED AASHTO STANDARD SPECIFICATIONS.
2. THE MAXIMUM SIGN AREA ON A STRUCTURE SHALL BE AS NOTED.

FILE NAME						
TIME						
DATE				REGION NO. 10	STATE WASH	FED.AID PROJ.NO.
PLOTTED BY				JOB NUMBER		
DESIGNED BY						
ENTERED BY						
CHECKED BY				CONTRACT NO.		LOCATION NO.
PROJ. ENGR.						
REGIONAL ADM.	REVISION	DATE	BY			

P.E. STAMP BOX DATE

P.E. STAMP BOX DATE

HNTB

Perteet Inc.
425-252-7700 | 1-800-615-9900
2707 Colby Avenue, Suite 900
Everett, Washington 98201

SR 167 MP ??.?? TO MP ??.??
SR167
HOT LANES
KING COUNTY JUNE 2006

CANTILEVER 1, 2 & 4 - LAYOUT

S4

SHEET OF SHEETS

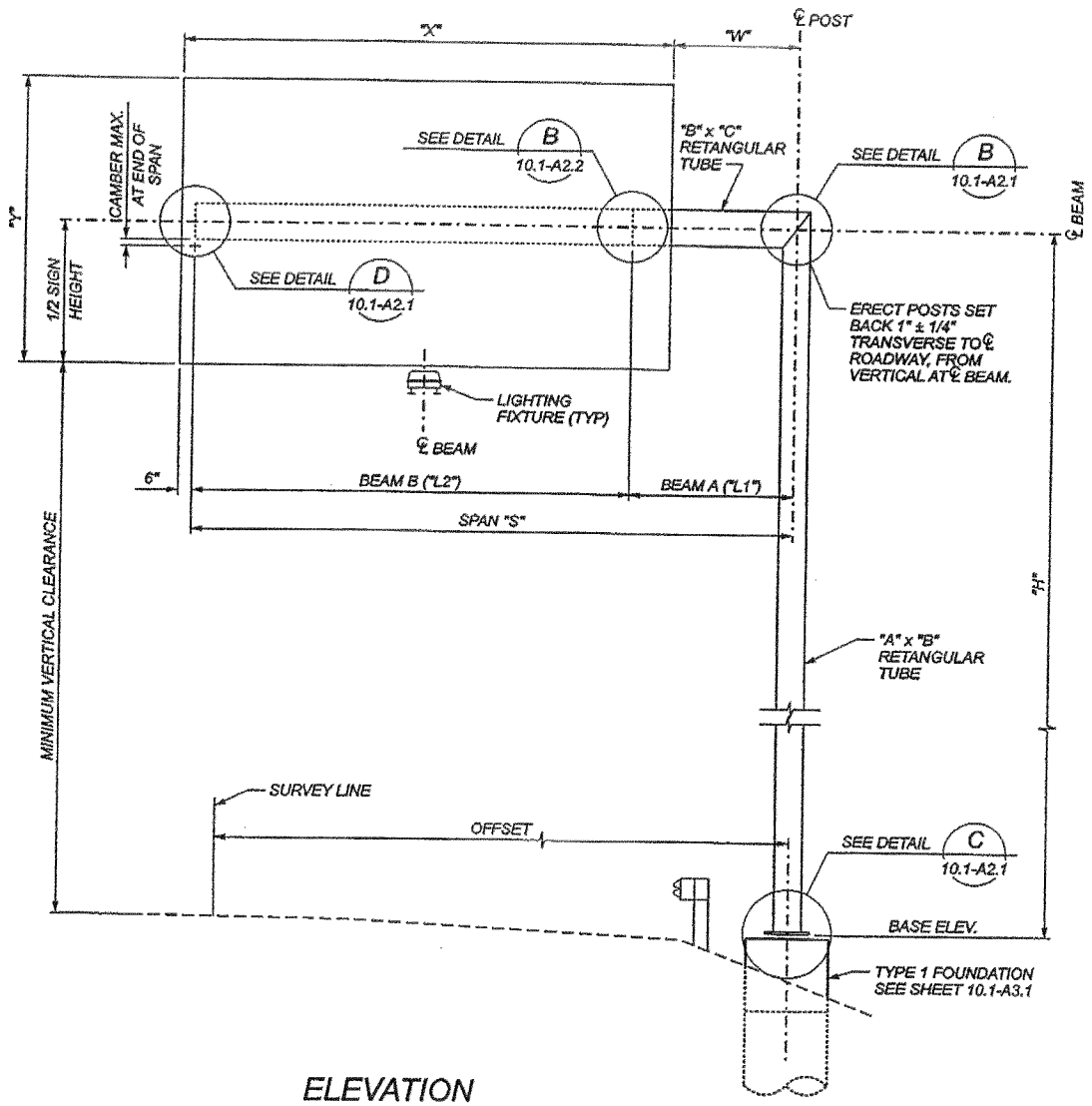

ELEVATION

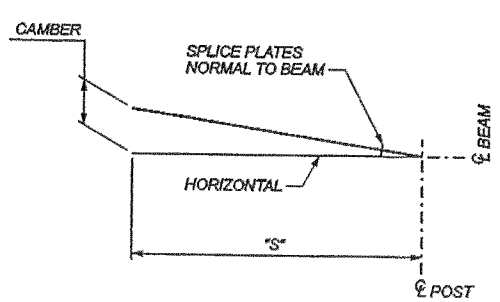

BEAM CAMBER DIAGRAM

LEGEND

B / 15 — IDENTIFIES SECTION, VIEW OR DETAIL; TAKEN OR SHOWN ON BRIDGE SHEET 15

B / — TAKEN OR SHOWN ON THE SAME SHEET

GENERAL NOTES

1. ALL MATERIAL AND WORKMANSHIP SHALL BE IN ACCORDANCE WITH THE REQUIREMENTS OF THE WASHINGTON STATE DEPARTMENT OF TRANSPORTATION STANDARD SPECIFICATIONS FOR ROAD, BRIDGE AND MUNICPAL CONSTRUCTION (ENGLISH) DATED 2002 AND AMENDMENTS.
2. ALL BUTT JOINT WELDS SHALL BE FULL PENETRATION GROOVE WELDS WITH BACK-UP PLATES OF 1/4" MIN. THICKNESS.
3. THE BACK-UP PLATES FOR ALL FULL PENETRATION WELDS SHALL BE WELDED CONTINUOUSLY TO THE JOINED PIECES. THIS CAN BE DONE BY EITHER A CONTINUOUS FILLET WELD ON THE BACK SIDE OF THE PIECE, OR BY A CONTINUOUS WELD IN THE ROOT OF THE FULL PENETRATION WELD.
4. ALL BOLTS, RODS AND RELATED HARDWARE SHALL BE GALVANIZED AFTER FABRICATION PER AASHTO M 232.
5. STEEL SURFACES SHALL BE GALVANIZED AFTER FABRICATION IN ACCORDANCE WITH AASHTO M 111. ALL EXTERIOR STEEL SURFACES SHALL BE PAINTED IN ACCORDANCE WITH THE SPECIAL PROVISIONS.
6. SIGN PANELS AS SHOWN IN THE CONTRACT PLANS SHALL BE INSTALLED WITH THE SIGN STRUCTURE OR IMMEDIATELY AFTER THE SIGN IS ERECTED.
7. FABRICATE BEAM TO PROVIDE SMOOTH PARABOLIC CAMBER CURVE. SEE CAMBER DIAGRAM. DO NOT SHIM AT BOLTED SPLICES.
8. FABRICATE POSTS STRAIGHT.
9. MATERIALS SPECIFICATIONS:

ALL STRUCTURAL STEEL	ASTM A572 GR. 50 OR ASTM A 588
ANCHOR RODS	ASTM F 1554 GR. 105
HANDHOLE COVER SCREWS	ASTM F 593 GR. 1
SPLICE BOLTS	AASHTO M 164
SIGN BRACKET BOLTS	ASTM A 307
MOUNTING BEAM BOLTS	AASHTO M 164
COVER PLATES	ASTM A36

10. BASE ELEVATIONS AND POST HEIGHTS SHOWN ARE APPROXIMATE. THE CONTRACTOR SHALL FIELD MEASURE ANCHOR BOLT LOCATIONS, ELEVATIONS AND ALL STEEL STRUCTURE DIMENSIONS PRIOR TO THE FABRICATION OF THE STRUCTURAL STEEL AND NOTIFY THE ENGINEER OF ANY DISCREPANCIES. FINAL VALUES WILL BE FURNISHED BY THE ENGINEER PRIOR TO FABRICATION.
11. SEE OTHER PLANS FOR CONDUIT LOCATIONS, CONDUCTOR PENETRATIONS AND ADDITIONAL HAND HOLES.
12. POSTS, BASE PLATES, BEAMS AND SPLICE PLATES ARE MAIN LOAD CARRYING TENSILE MEMBERS OR TENSION COMPONENTS OF FLEXURAL MEMBERS AND SHALL MEET THE LONGITUDINAL CHARPY V-NOTCH TESTS AS DESCRIBED IN SECTION 6-03.2 FOR AASHTO M 270 MATERIAL. NON-DESTRUCTIVE TEST ACCEPTANCE CRITERIA TO CONFORM TO TENSILE MEMBERS WITH CYCLIC LOAD.

DESIGN CRITERIA

1. THE DESIGN AND ANALYSIS OF THE SIGN STRUCTURES HAS BEEN DONE IN ACCORDANCE WITH AASHTO STANDARD SPECIFICATIONS FOR STRUCTURAL SUPPORTS FOR HIGHWAY SIGNS, LUMINAIRES AND TRAFFIC SIGNALS - FOURTH EDITIN - DATED 2001, USING BASIC WIND SPEED OF 90 MPH AND 50 YEARS OF DESIGN LIFE. FATIGUE DESIGN OF THE STRUCTURE CONFORMS TO FATIGUE CATEGORY 1 OF THE SPECIFIED AASHTO STANDARD SPECIFICATIONS.
2. THE MAXIMUM SIGN AREA ON A STRUCTURE SHALL BE AS NOTED.

FILE NAME						
TIME				REGION NO. 10	STATE WASH	FED.AID PROJ.NO.
DATE						
PLOTTED BY				JOB NUMBER		
DESIGNED BY						
ENTERED BY						
CHECKED BY				CONTRACT NO.		LOCATION NO.
PROJ. ENGR.						
REGIONAL ADM.	REVISION	DATE	BY			

P.E. STAMP BOX DATE

P.E. STAMP BOX DATE

HNTB

Perteet Inc.
425-252-7700 | 1-800-615-9900
2707 Colby Avenue, Suite 900
Everett, Washington 98201

SR 167 MP ??.?? TO MP ??.??
SR167
HOT LANES
KING COUNTY JUNE 2006

CANTILEVER 3 & 5 - LAYOUT

S5

SHEET OF SHEETS

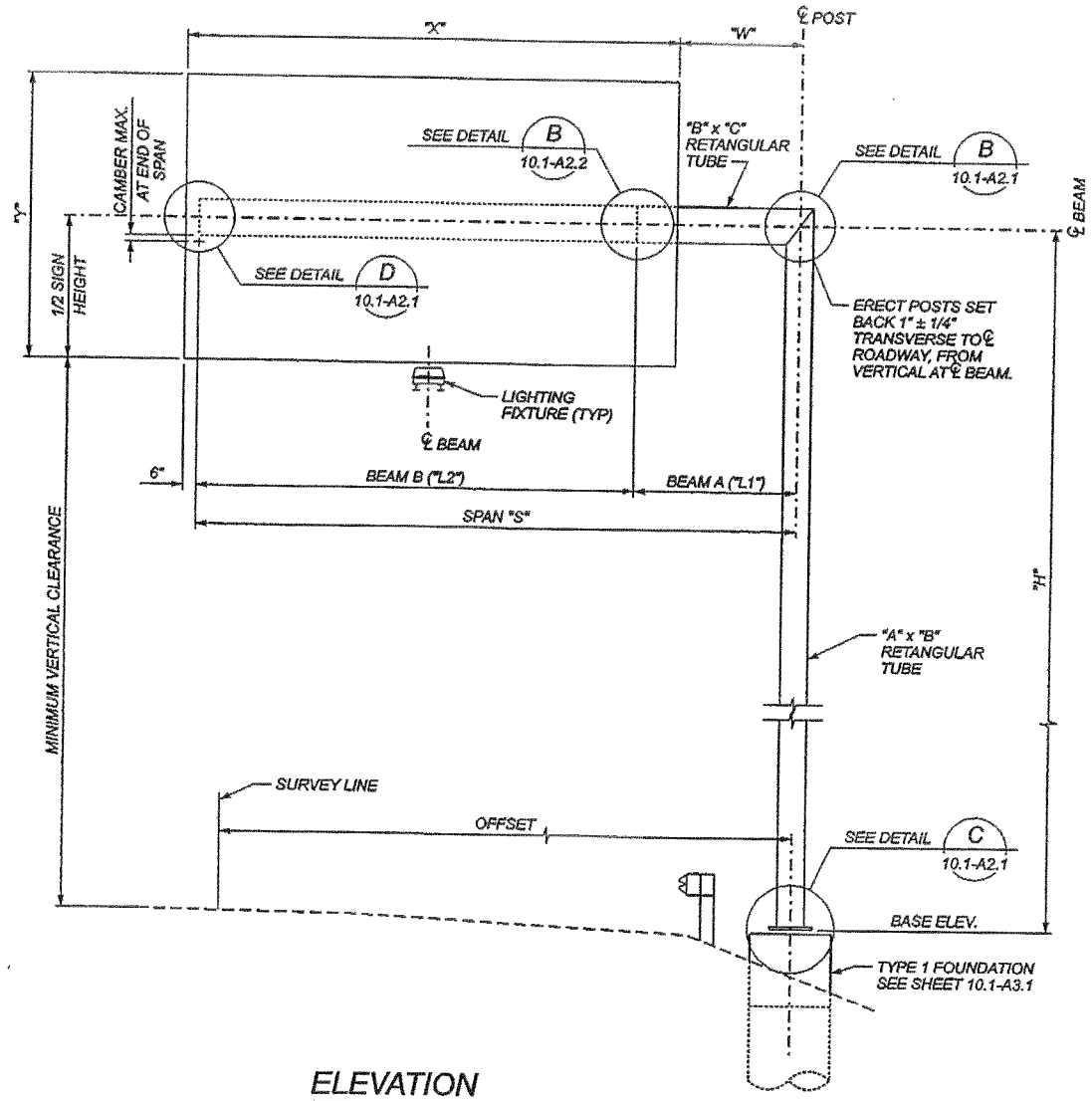

ELEVATION

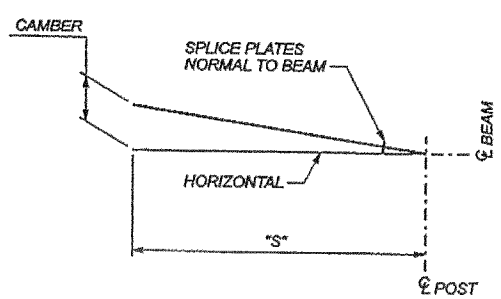

BEAM CAMBER DIAGRAM

LEGEND

B / 15 — IDENTIFIES SECTION, VIEW OR DETAIL; TAKEN OR SHOWN ON BRIDGE SHEET 15

B / — TAKEN OR SHOWN ON THE SAME SHEET

GENERAL NOTES

1. ALL MATERIAL AND WORKMANSHIP SHALL BE IN ACCORDANCE WITH THE REQUIREMENTS OF THE WASHINGTON STATE DEPARTMENT OF TRANSPORTATION STANDARD SPECIFICATIONS FOR ROAD, BRIDGE AND MUNICPAL CONSTRUCTION (ENGLISH) DATED 2002 AND AMENDMENTS.
2. ALL BUTT JOINT WELDS SHALL BE FULL PENETRATION GROOVE WELDS WITH BACK--UP PLATES OF ¼" MIN. THICKNESS.
3. THE BACK-UP PLATES FOR ALL FULL PENETRATION WELDS SHALL BE WELDED CONTINUOUSLY TO THE JOINED PIECES. THIS CAN BE DONE BY EITHER A CONTINUOUS FILLET WELD ON THE BACK SIDE OF THE PIECE, OR BY A CONTINUOUS WELD IN THE ROOT OF THE FULL PENETRATION WELD.
4. ALL BOLTS, RODS AND RELATED HARDWARE SHALL BE GALVANIZED AFTER FABRICATION PER AASHTO M 232.
5. STEEL SURFACES SHALL BE GALVANIZED AFTER FABRICATION IN ACCORDANCE WITH AASHTO M 111. ALL EXTERIOR STEEL SURFACES SHALL BE PAINTED IN ACCORDANCE WITH THE SPECIAL PROVISIONS.
6. SIGN PANELS AS SHOWN IN THE CONTRACT PLANS SHALL BE INSTALLED WITH THE SIGN STRUCTURE OR IMMEDIATELY AFTER THE SIGN IS ERECTED.
7. FABRICATE BEAM TO PROVIDE SMOOTH PARABOLIC CAMBER CURVE. SEE CAMBER DIAGRAM. DO NOT SHIM AT BOLTED SPLICES.
8. FABRICATE POSTS STRAIGHT.
9. MATERIALS SPECIFICATIONS:

ALL STRUCTURAL STEEL	ASTM A572 GR. 50 OR ASTM A 588
ANCHOR RODS	ASTM F 1554 GR. 105
HANDHOLE COVER SCREWS	ASTM F 593 GR. 1
SPLICE BOLTS	AASHTO M 164
SIGN BRACKET BOLTS	ASTM A 307
MOUNTING BEAM BOLTS	AASHTO M 164
COVER PLATES	ASTM A36

10. BASE ELEVATIONS AND POST HEIGHTS SHOWN ARE APPROXIMATE. THE CONTRACTOR SHALL FIELD MEASURE ANCHOR BOLT LOCATIONS, ELEVATIONS AND ALL STEEL STRUCTURE DIMENSIONS PRIOR TO THE FABRICATION OF THE STRUCTURAL STEEL AND NOTIFY THE ENGINEER OF ANY DISCREPANCIES. FINAL VALUES WILL BE FURNISHED BY THE ENGINEER PRIOR TO FABRICATION.
11. SEE OTHER PLANS FOR CONDUIT LOCATIONS, CONDUCTOR PENETRATIONS AND ADDITIONAL HAND HOLES.
12. POSTS, BASE PLATES, BEAMS AND SPLICE PLATES ARE MAIN LOAD CARRYING TENSILE MEMBERS OR TENSION COMPONENTS OF FLEXURAL MEMBERS AND SHALL MEET THE LONGITUDINAL CHARPY V-NOTCH TESTS AS DESCRIBED IN SECTION 6-03.2 FOR AASHTO M 270 MATERIAL. NON-DESTRUCTIVE TEST ACCEPTANCE CRITERIA TO CONFORM TO TENSILE MEMBERS WITH CYCLIC LOAD.

DESIGN CRITERIA

1. THE DESIGN AND ANALYSIS OF THE SIGN STRUCTURES HAS BEEN DONE IN ACCORDANCE WITH AASHTO STANDARD SPECIFICATIONS FOR STRUCTURAL SUPPORTS FOR HIGHWAY SIGNS, LUMINAIRES AND TRAFFIC SIGNALS - FOURTH EDITIN - DATED 2001, USING BASIC WIND SPEED OF 90 MPH AND 50 YEARS OF DESIGN LIFE. FATIGUE DESIGN OF THE STRUCTURE CONFORMS TO FATIGUE CATEGORY 1 OF THE SPECIFIED AASHTO STANDARD SPECIFICATIONS.
2. THE MAXIMUM SIGN AREA ON A STRUCTURE SHALL BE AS NOTED.

FILE NAME						
TIME				REGION NO.	STATE	FED.AID PROJ.NO.
DATE				10	WASH	
PLOTTED BY				JOB NUMBER		
DESIGNED BY						
ENTERED BY				CONTRACT NO.		LOCATION NO.
CHECKED BY						
PROJ. ENGR.						
REGIONAL ADM.	REVISION	DATE	BY			

P.E. STAMP BOX DATE

P.E. STAMP BOX DATE

HNTB

Perteet Inc.
425-252-7700 | 1-800-615-9900
2707 Colby Avenue, Suite 900
Everett, Washington 98201

SR 167 MP ??.?? TO MP ??.??
SR167
HOT LANES
KING COUNTY JUNE 2006

CANTILEVER 8, 9, 12, 15 & 17 - LAYOUT

S6

SHEET OF SHEETS

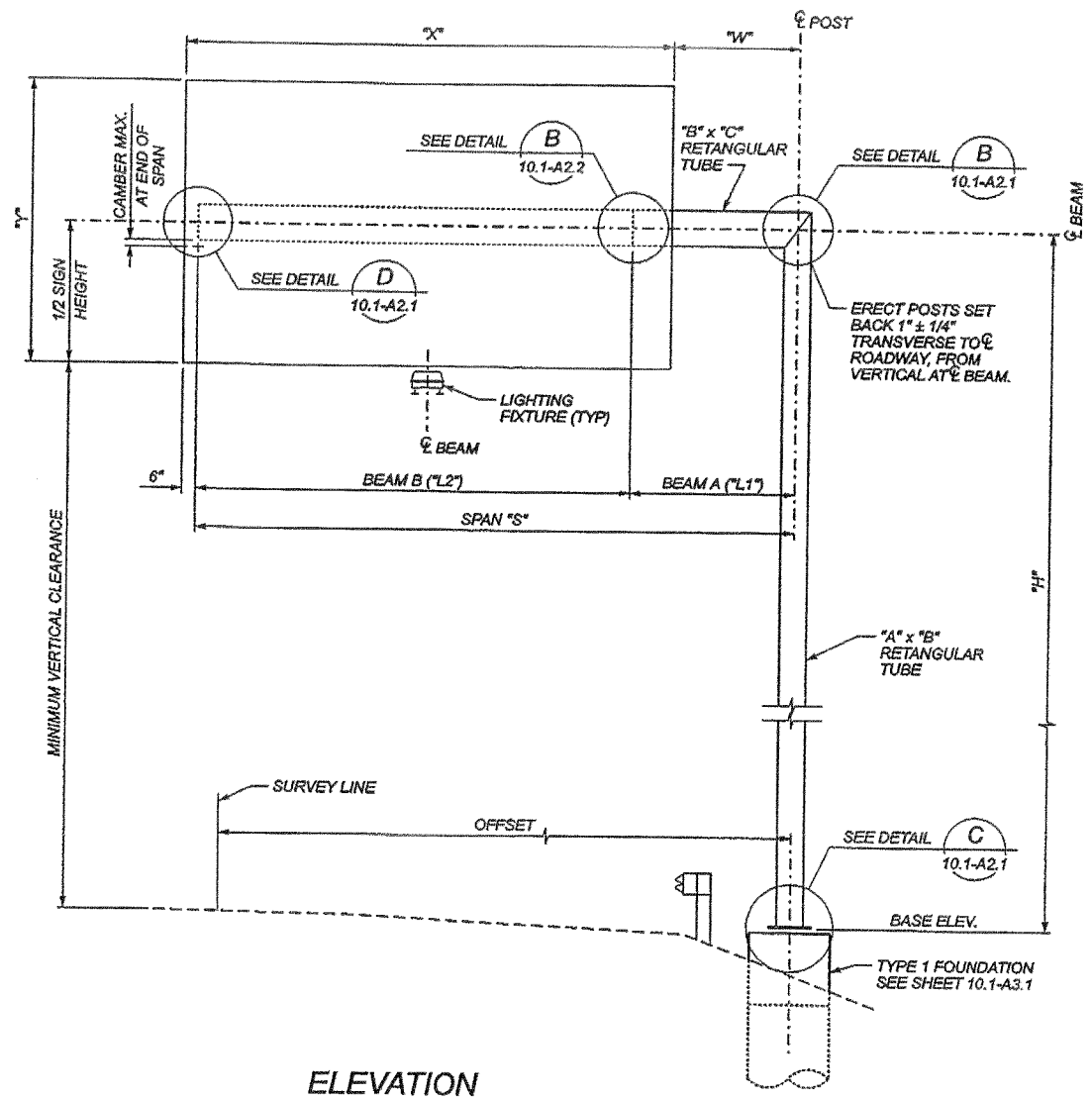

ELEVATION

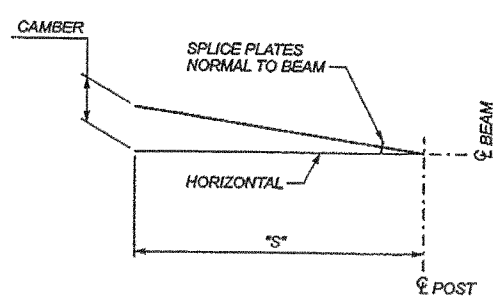

BEAM CAMBER DIAGRAM

LEGEND

B / 15 — IDENTIFIES SECTION, VIEW OR DETAIL; TAKEN OR SHOWN ON BRIDGE SHEET 15

B / — TAKEN OR SHOWN ON THE SAME SHEET

GENERAL NOTES

1. ALL MATERIAL AND WORKMANSHIP SHALL BE IN ACCORDANCE WITH THE REQUIREMENTS OF THE WASHINGTON STATE DEPARTMENT OF TRANSPORTATION STANDARD SPECIFICATIONS FOR ROAD, BRIDGE AND MUNICPAL CONSTRUCTION (ENGLISH) DATED 2002 AND AMENDMENTS.
2. ALL BUTT JOINT WELDS SHALL BE FULL PENETRATION GROOVE WELDS WITH BACK--UP PLATES OF 1/4" MIN. THICKNESS.
3. THE BACK-UP PLATES FOR ALL FULL PENETRATION WELDS SHALL BE WELDED CONTINUOUSLY TO THE JOINED PIECES. THIS CAN BE DONE BY EITHER A CONTINUOUS FILLET WELD ON THE BACK SIDE OF THE PIECE, OR BY A CONTINUOUS WELD IN THE ROOT OF THE FULL PENETRATION WELD.
4. ALL BOLTS, RODS AND RELATED HARDWARE SHALL BE GALVANIZED AFTER FABRICATION PER AASHTO M 232.
5. STEEL SURFACES SHALL BE GALVANIZED AFTER FABRICATION IN ACCORDANCE WITH AASHTO M 111. ALL EXTERIOR STEEL SURFACES SHALL BE PAINTED IN ACCORDANCE WITH THE SPECIAL PROVISIONS.
6. SIGN PANELS AS SHOWN IN THE CONTRACT PLANS SHALL BE INSTALLED WITH THE SIGN STRUCTURE OR IMMEDIATELY AFTER THE SIGN IS ERECTED.
7. FABRICATE BEAM TO PROVIDE SMOOTH PARABOLIC CAMBER CURVE. SEE CAMBER DIAGRAM. DO NOT SHIM AT BOLTED SPLICES.
8. FABRICATE POSTS STRAIGHT.
9. MATERIALS SPECIFICATIONS:

ALL STRUCTURAL STEEL	ASTM A572 GR. 50 OR ASTM A 588
ANCHOR RODS	ASTM F 1554 GR. 105
HANDHOLE COVER SCREWS	ASTM F 593 GR. 1
SPLICE BOLTS	AASHTO M 164
SIGN BRACKET BOLTS	ASTM A 307
MOUNTING BEAM BOLTS	AASHTO M 164
COVER PLATES	ASTM A36

10. BASE ELEVATIONS AND POST HEIGHTS SHOWN ARE APPROXIMATE. THE CONTRACTOR SHALL FIELD MEASURE ANCHOR BOLT LOCATIONS, ELEVATIONS AND ALL STEEL STRUCTURE DIMENSIONS PRIOR TO THE FABRICATION OF THE STRUCTURAL STEEL AND NOTIFY THE ENGINEER OF ANY DISCREPANCIES. FINAL VALUES WILL BE FURNISHED BY THE ENGINEER PRIOR TO FABRICATION.
11. SEE OTHER PLANS FOR CONDUIT LOCATIONS, CONDUCTOR PENETRATIONS AND ADDITIONAL HAND HOLES.
12. POSTS, BASE PLATES, BEAMS AND SPLICE PLATES ARE MAIN LOAD CARRYING TENSILE MEMBERS OR TENSION COMPONENTS OF FLEXURAL MEMBERS AND SHALL MEET THE LONGITUDINAL CHARPY V-NOTCH TESTS AS DESCRIBED IN SECTION 6-03.2 FOR AASHTO M 270 MATERIAL. NON-DESTRUCTIVE TEST ACCEPTANCE CRITERIA TO CONFORM TO TENSILE MEMBERS WITH CYCLIC LOAD.

DESIGN CRITERIA

1. THE DESIGN AND ANALYSIS OF THE SIGN STRUCTURES HAS BEEN DONE IN ACCORDANCE WITH AASHTO STANDARD SPECIFICATIONS FOR STRUCTURAL SUPPORTS FOR HIGHWAY SIGNS, LUMINAIRES AND TRAFFIC SIGNALS - FOURTH EDITIN - DATED 2001, USING BASIC WIND SPEED OF 90 MPH AND 50 YEARS OF DESIGN LIFE. FATIGUE DESIGN OF THE STRUCTURE CONFORMS TO FATIGUE CATEGORY 1 OF THE SPECIFIED AASHTO STANDARD SPECIFICATIONS.
2. THE MAXIMUM SIGN AREA ON A STRUCTURE SHALL BE AS NOTED.

FILE NAME					
TIME					
DATE					
PLOTTED BY					
DESIGNED BY					
ENTERED BY					
CHECKED BY					
PROJ. ENGR.					
REGIONAL ADM.	REVISION	DATE	BY		

REGION NO.	STATE	FED.AID PROJ.NO.
10	WASH	
JOB NUMBER		
CONTRACT NO.		LOCATION NO.

P.E. STAMP BOX — DATE

P.E. STAMP BOX — DATE

HNTB

Perteet Inc.
425-252-7700 | 1-800-615-9900
2707 Colby Avenue, Suite 900
Everett, Washington 98201

SR 167 MP ??.?? TO MP ??.??
SR167
HOT LANES
KING COUNTY JUNE 2006

CANTILEVER 6, 7, 10, 11, 13, 14 & 16 - LAYOUT

S7

SHEET OF SHEETS

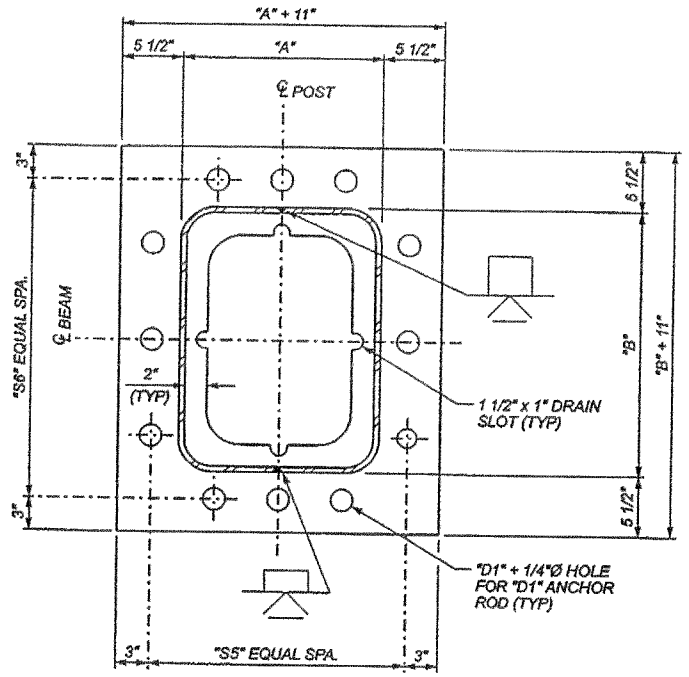

SECTION E

SEE OTHER SHEETS FOR BASES ON BARRIER FOUNDATIONS

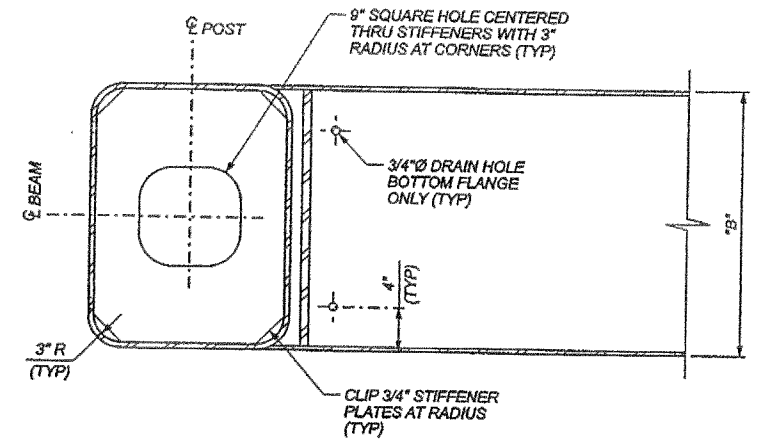

SECTION F

DIAGONAL STIFFENER NOT SHOWN

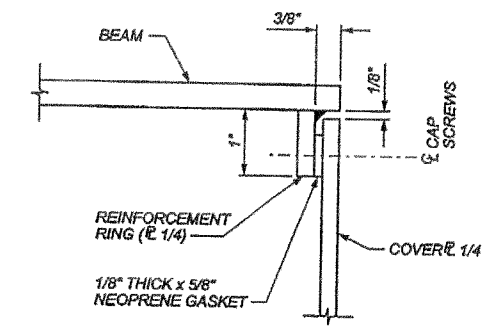

DETAIL D

10.1-A1.2

FOR CANTILEVER STRUCTURES ONLY. 1/4" CAP SCREWS ASTM F-593 ~ TAP REINFORCEMENT RING WITH 8 TOTAL EQUALLY SPACED AROUND COVER ℄

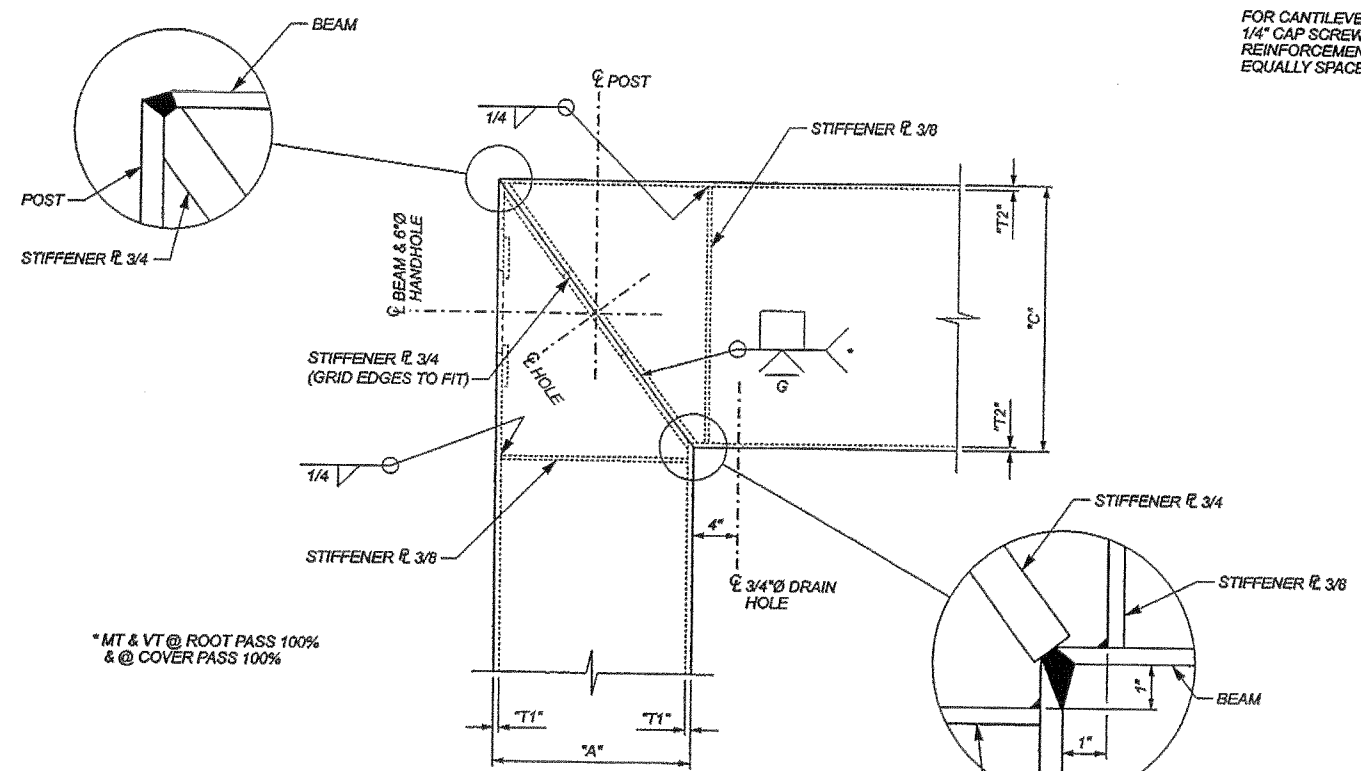

* MT & VT @ ROOT PASS 100% & @ COVER PASS 100%

DETAIL A

10.1-A1.1 & 10.1-A1.2

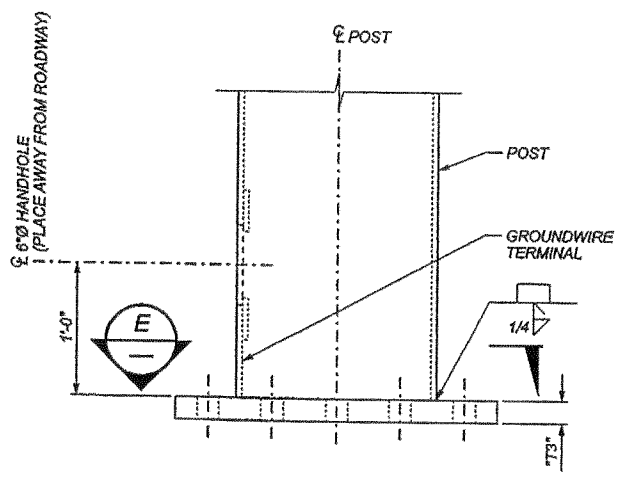

POST BASE DETAIL C

10.1-A1.1 & 10.1-A1.2

FILE NAME							
TIME							
DATE				REGION NO. 10	STATE WASH	FED.AID PROJ.NO.	
PLOTTED BY							
DESIGNED BY				JOB NUMBER			
ENTERED BY							
CHECKED BY				CONTRACT NO.		LOCATION NO.	
PROJ. ENGR.							
REGIONAL ADM.	REVISION	DATE	BY				

P.E. STAMP BOX DATE

P.E. STAMP BOX DATE

HNTB

Perteet Inc.
425-252-7700 | 1-800-615-9900
2707 Colby Avenue, Suite 900
Everett, Washington 98201

SR 167 MP ??.?? TO MP ??.??
SR167
HOT LANES
KING COUNTY JUNE 2006

CANTILEVER 1 to 17 - STRUCTURAL DETAILS 1

S8

SHEET OF SHEETS

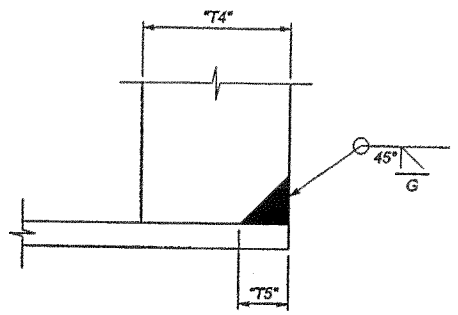

DETAIL H

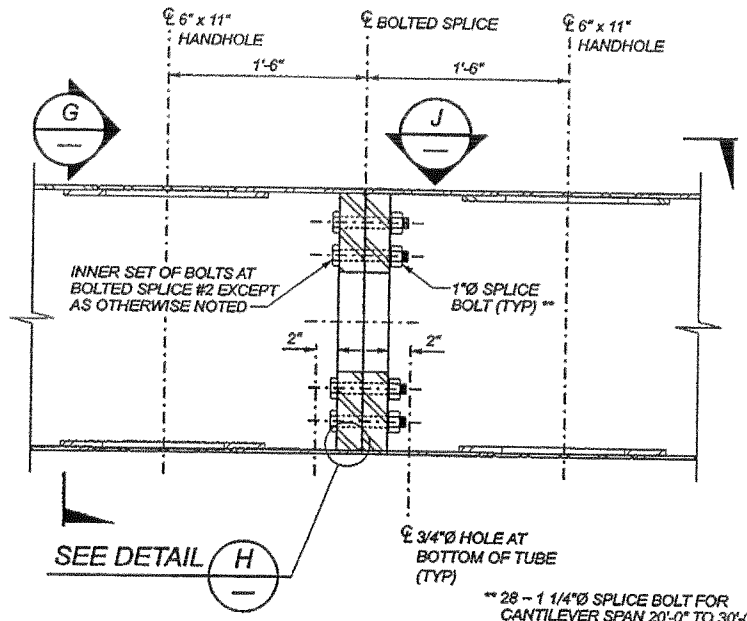

** 28 – 1 1/4"Ø SPLICE BOLT FOR CANTILEVER SPAN 20'-0" TO 30'-0" EXCEPT AS NOTED.

DETAIL B

10.1-A1.1 & 10.1-A1.2

SECTION THRU BEAM BOLTED #2 SHOWN. BOLTED SPLICE #1 SIMILAR.

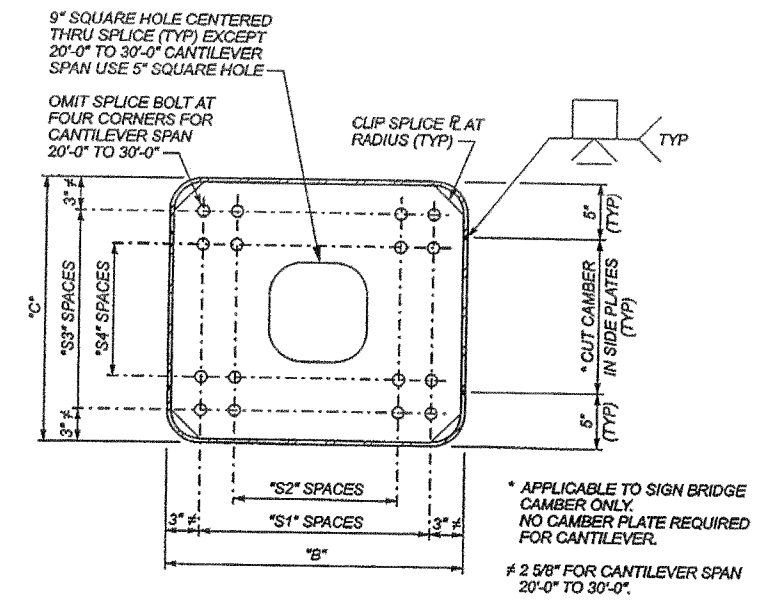

* APPLICABLE TO SIGN BRIDGE CAMBER ONLY. NO CAMBER PLATE REQUIRED FOR CANTILEVER.

≠ 2 5/8" FOR CANTILEVER SPAN 20'-0" TO 30'-0".

SECTION G

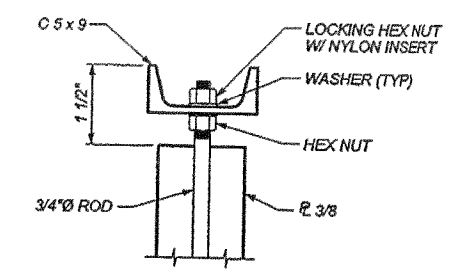

SECTION M

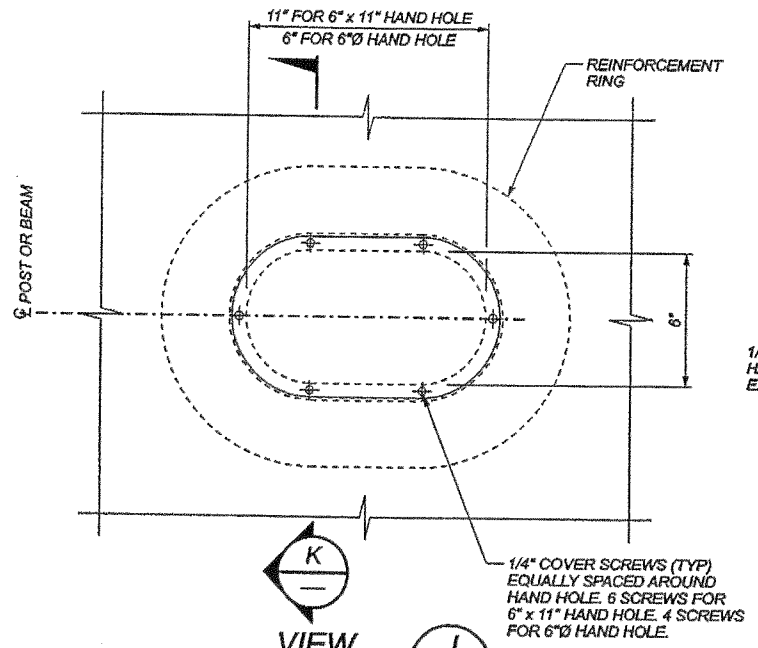

VIEW J

6" x 11" HAND HOLE SHOWN. 6"Ø HAND HOLE SIMILAR EXCEPT AS NOTED.

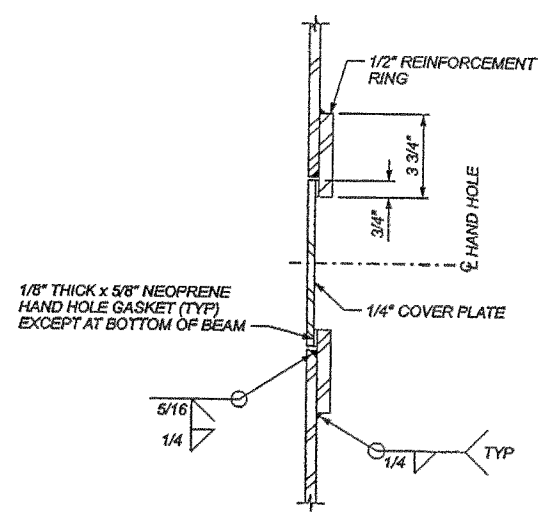

SECTION K

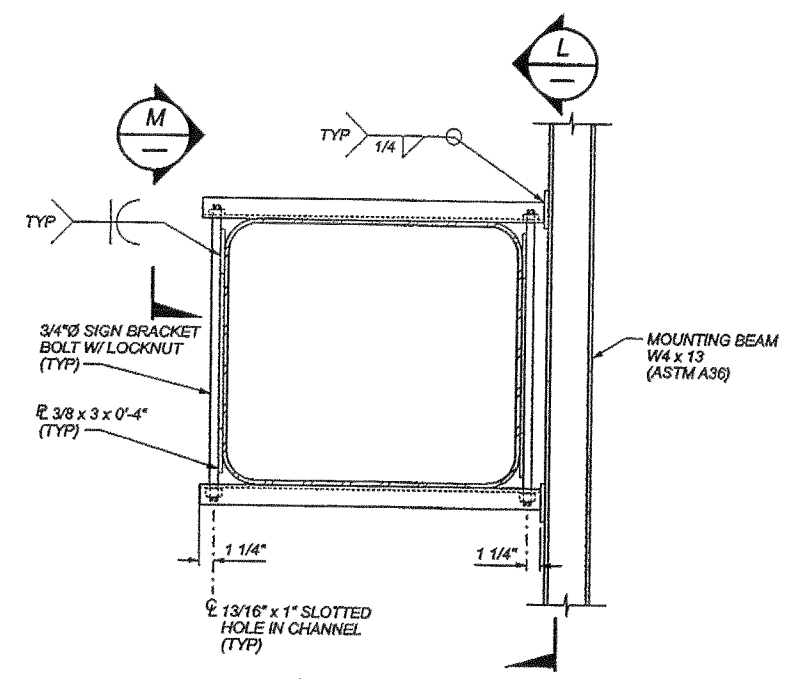

ATTACHMENT BRACKET DETAIL

PAINT ENTIRE ATTACHMENT BRACKET TO MATCH EXISTING STRUCTURE EXCEPT FOR MOUNTING BEAM. SIGN, LIGHT, BEAM LENGTHS, SIZE AND SPACING SHALL BE DETERMINED FROM THE CONTRACT PLANS OR THE STANDARD PLANS. VARIABLE MESSAGE SIGNS SHALL HAVE MOUNTING BEAMS @ 3'-0" MAXIMUM.

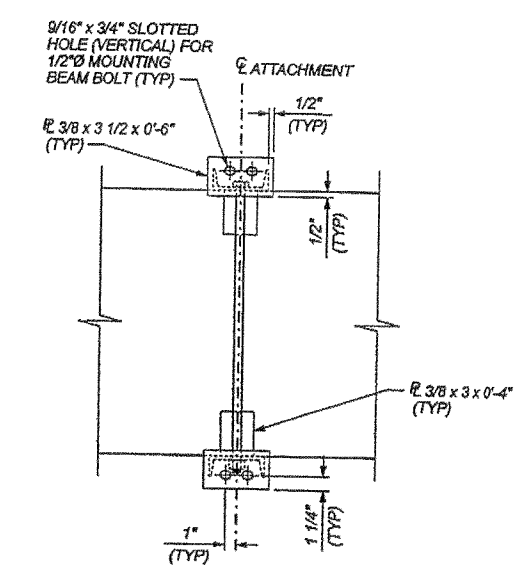

SECTION L

FILE NAME						
TIME				REGION NO. 10	STATE WASH	FED.AID PROJ.NO.
DATE				JOB NUMBER		
PLOTTED BY						
DESIGNED BY						
ENTERED BY				CONTRACT NO.		LOCATION NO.
CHECKED BY						
PROJ. ENGR.						
REGIONAL ADM.	REVISION	DATE	BY			

P.E. STAMP BOX DATE

P.E. STAMP BOX DATE

HNTB

Perteet Inc.
425-252-7700 | 1-800-615-9900
2707 Colby Avenue, Suite 900
Everett, Washington 98201

SR 167 MP ??.?? TO MP ??.??
SR167
HOT LANES
KING COUNTY JUNE 2006

CANTILEVER 1 to 17 - STRUCTURAL DETAILS 2

S9

SHEET OF SHEETS

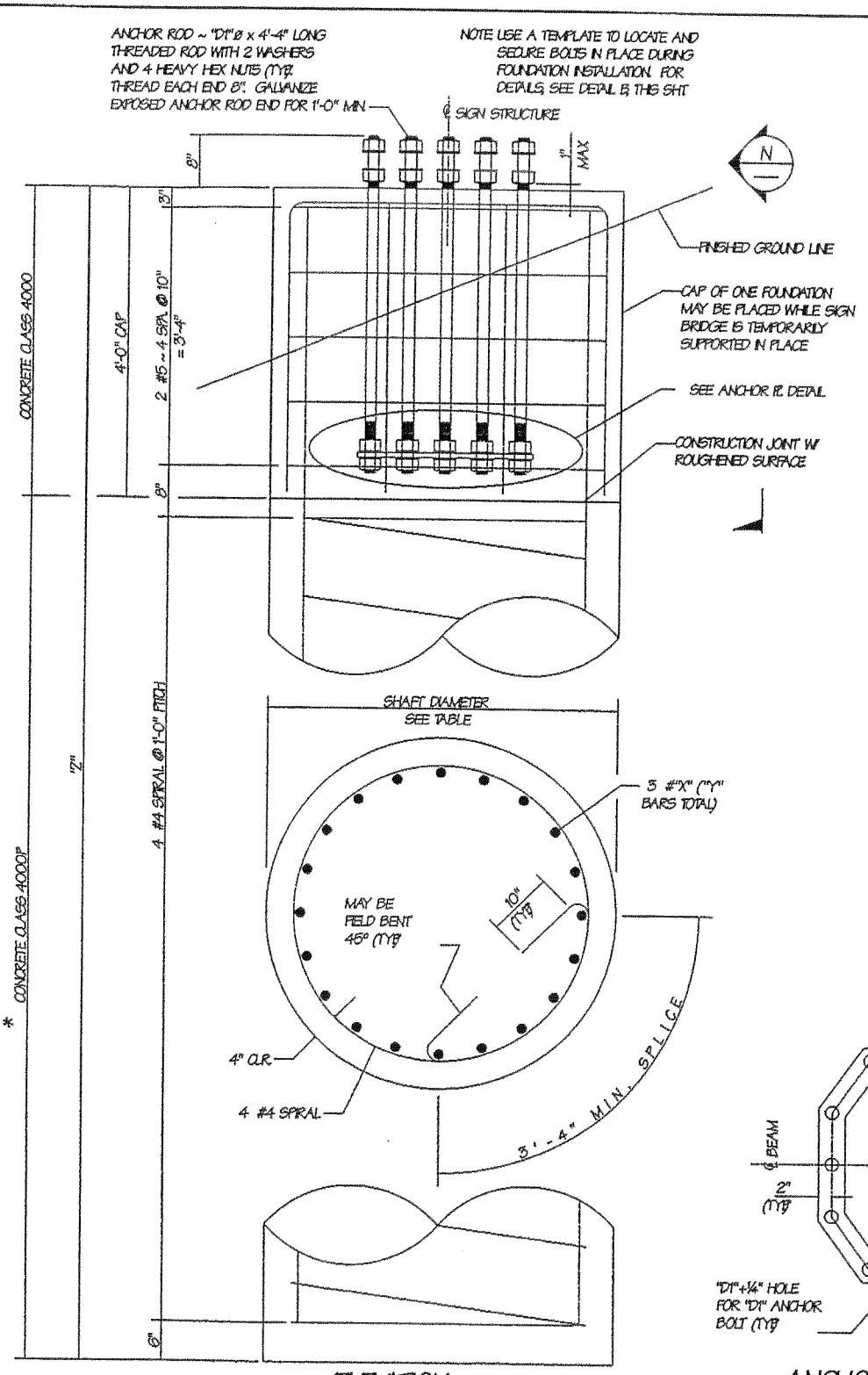

ELEVATION

*USE CONCRETE CLASS 4000W WHEN WATER IS PRESENT IN THE EXCAVATION

TYPE 1 FOUNDATION TABLE

	SPAN LENGTH ("S")	SHAFT DIAMETER	DEPTH ("Z")	FOUNDATION REINFORCEMENT SIZE ("X")	FOUNDATION REINFORCEMENT NUMBER ("Y")
CANTILEVER SIGN	LESS THAN 20'-0"	4'-6"	12'-6"	9	12
	20'-0" TO 30'-0"	4'-6"	15'-0"	9	16
SIGN BRIDGE	LESS THAN 60'-0"	4'-6"	15'-6"	9	18
	60'-0" TO 90'-0"	4'-6"	19'-0"	9	20
	90'-0" TO 120'-0"	5'-0"	21'-9"	11	15 BUNDLED PAIRS
	120'-0" TO 150'-0"	5'-0"	23'-6"	11	17 BUNDLED PAIRS

SHAFT DEPTH "Z" IS BASED ON ALLOWABLE LATERAL BEARING PRESSURE OF 2500 PSF OR MORE

BAR LIST

MARK	LOCATION	SIZE	NO. REQ'D	LENGTH	
1	CAP VERTICAL	4	4	3'-9"	STR.
2	CAP HOOPS	5	5	"A"	
3	SHAFT VERTICAL	"X"	"Y"	"Z"-6"	STR.
4	SHAFT SPIRAL	4	1	"A"	
5	CAP TOP	5	4	"A"	

AASHTO M 31 GR. 60

"A" ~ DETERMINE FROM PLANS

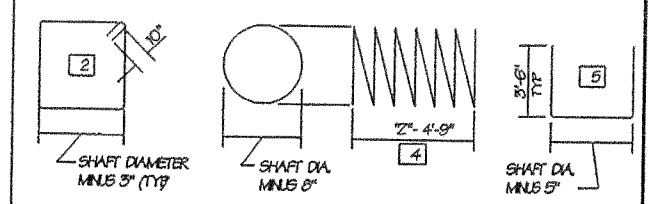

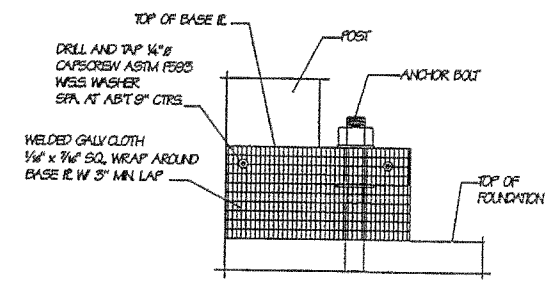

SCREEN DETAIL

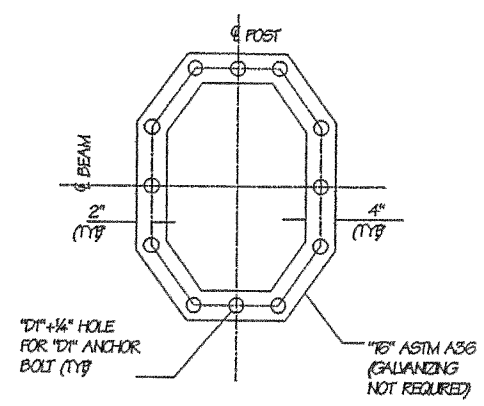

ANCHOR PL DETAIL

MATCH ANCHOR BOLT SIZE, NUMBER & PATTERN

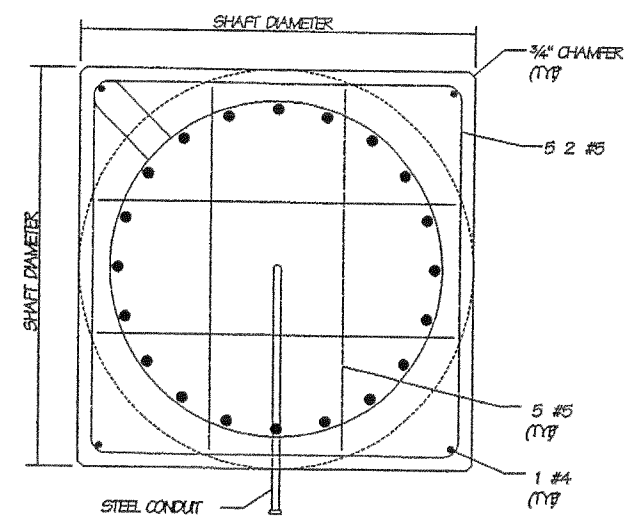

PLAN

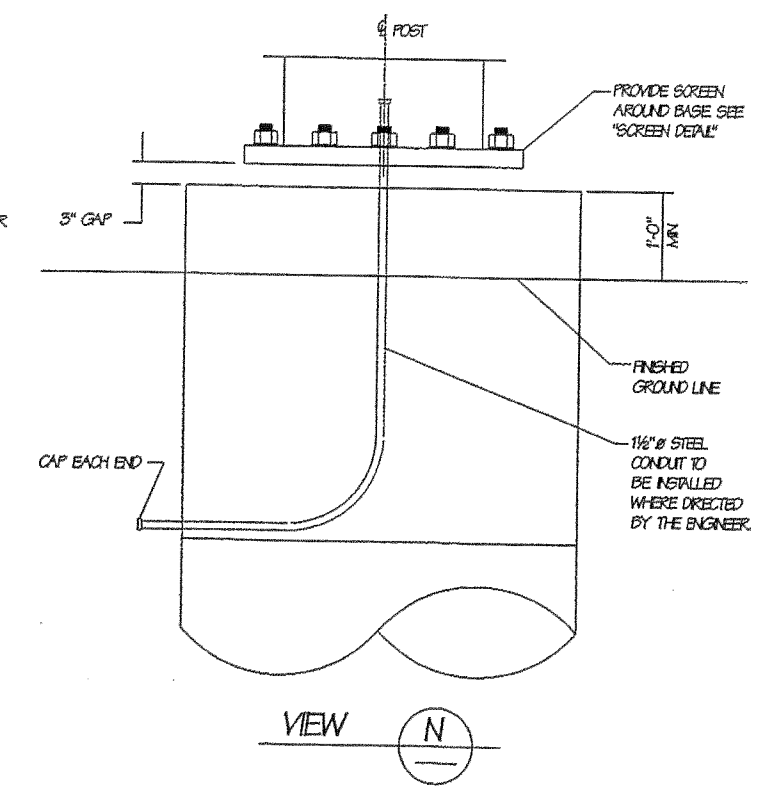

VIEW

N

FILE NAME			
TIME			
DATE			
PLOTTED BY			
DESIGNED BY			
ENTERED BY			
CHECKED BY			
PROJ. ENGR.			
REGIONAL ADM.	REVISION	DATE	BY

REGION NO.	STATE	FED.AID PROJ.NO.
10	WASH	
JOB NUMBER		
CONTRACT NO.		LOCATION NO.

P.E. STAMP BOX DATE

P.E. STAMP BOX DATE

HNTB

Perteet Inc.
425-252-7700 | 1-800-615-9900
2707 Colby Avenue, Suite 900
Everett, Washington 98201

SR 167 MP ??.?? TO MP ??.??
SR167
HOT LANES
KING COUNTY JUNE 2006

CANTILEVER 1 to 17 - FOUNDATION
TYPE 1

S10

SHEET OF SHEETS

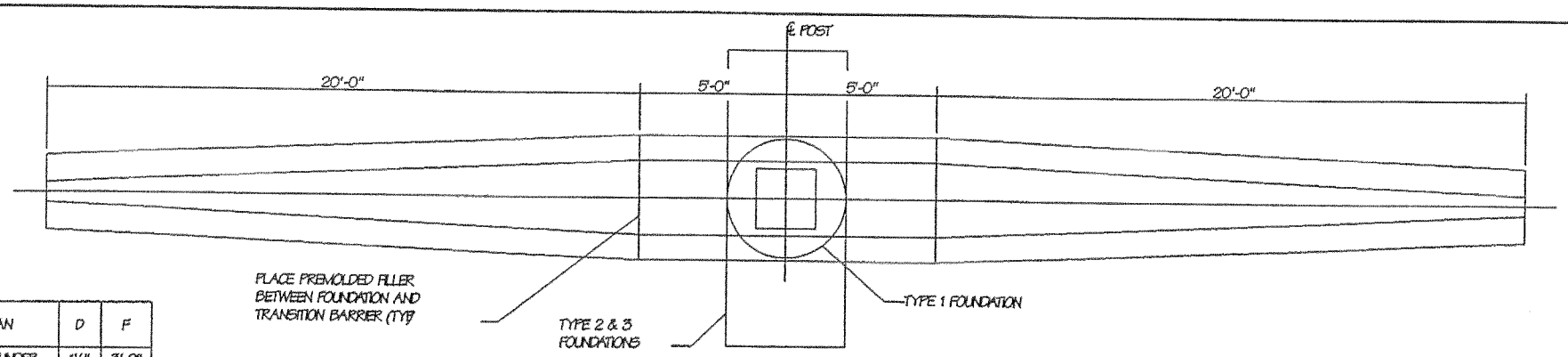

SPAN	D	F
60' & UNDER	1½"	3'-2"
60' TO 90'	2"	3'-5"
90' TO 120'	2¼"	3'-5"
120' & OVER	N/A	N/A

PLAN
BARRIER TRANSITION

BAR LIST

MARK	LOCATION	SIZE	NO. REQ'D	LENGTH	
21	MEDIAN BARRIER HORIZONTAL	5	10	9'-9"	STR.
22	MEDIAN BARRIER VERTICAL	5	14	6'-8"	
23	MEDIAN BARRIER VERTICAL	5	28	5'-10"	

AASHTO M 31 GR. 60

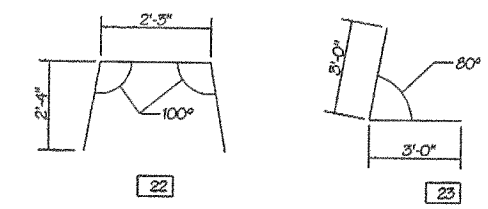

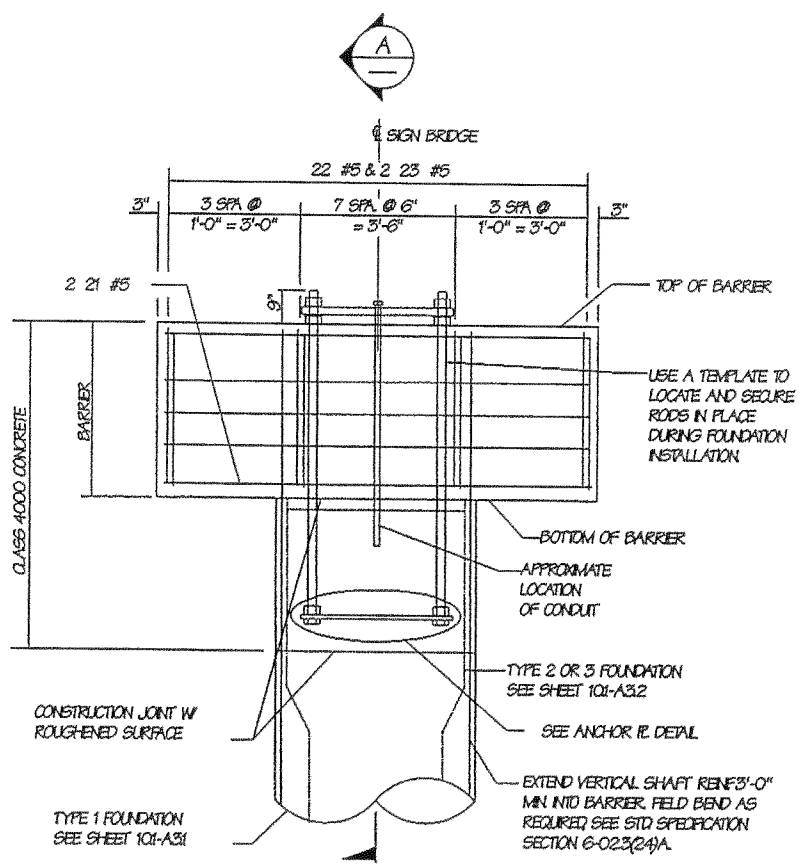

ELEVATION

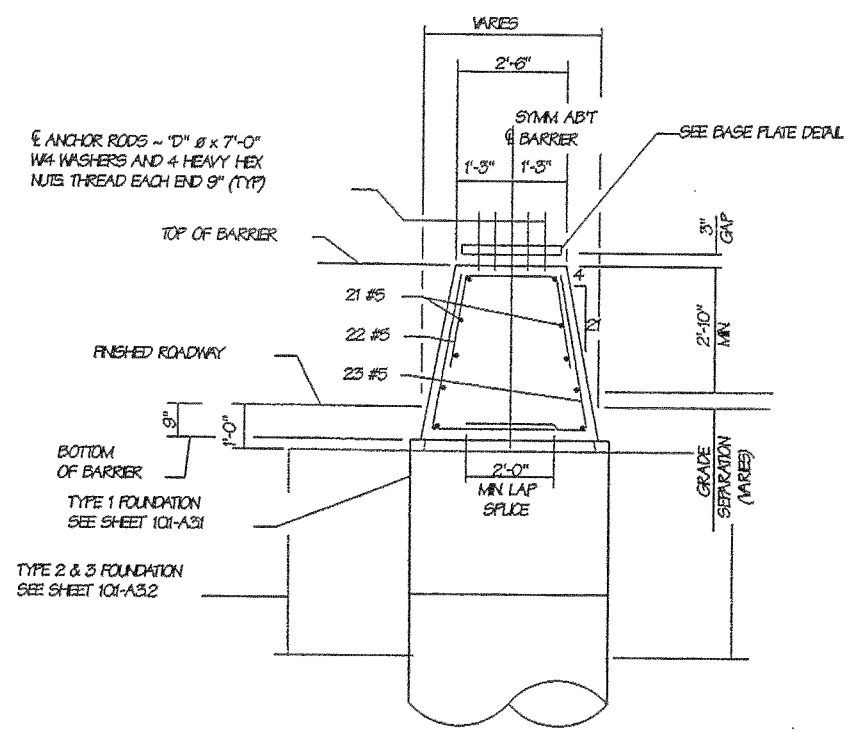

SECTION A

NOTE
TYPE 1 FOUNDATION SHOWN
TYPE 2 & 3 FOUNDATIONS SHOWN DASHED
FOR VALUES OF "D" AND "F" SEE TABLE THIS SHEET

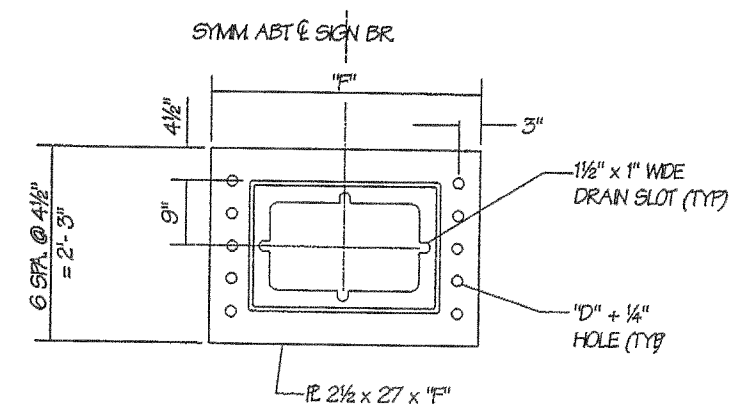

BASE PLATE

FOR INFORMATION NOT SHOWN
SEE DETAIL C, SHEET 101-A2.2

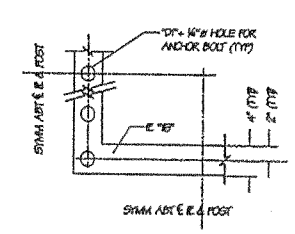

ANCHOR PL DETAIL

FILE NAME			
TIME			
DATE			
PLOTTED BY			
DESIGNED BY			
ENTERED BY			
CHECKED BY			
PROJ. ENGR.			
REGIONAL ADM.	REVISION	DATE	BY

REGION NO.	STATE	FED.AID PROJ.NO.
10	WASH	
JOB NUMBER		
CONTRACT NO.		LOCATION NO.

P.E. STAMP BOX — DATE

P.E. STAMP BOX — DATE

HNTB

Perteet Inc.
425-252-7700 | 1-800-615-9900
2707 Colby Avenue, Suite 900
Everett, Washington 98201

SR 167 MP ??.?? TO MP ??.??
SR167
HOT LANES
KING COUNTY JUNE 2006

CANTILEVER 6 to 17 - SINGLE SLOPE BARRIER FOUNDATION

S11

SHEET OF SHEETS

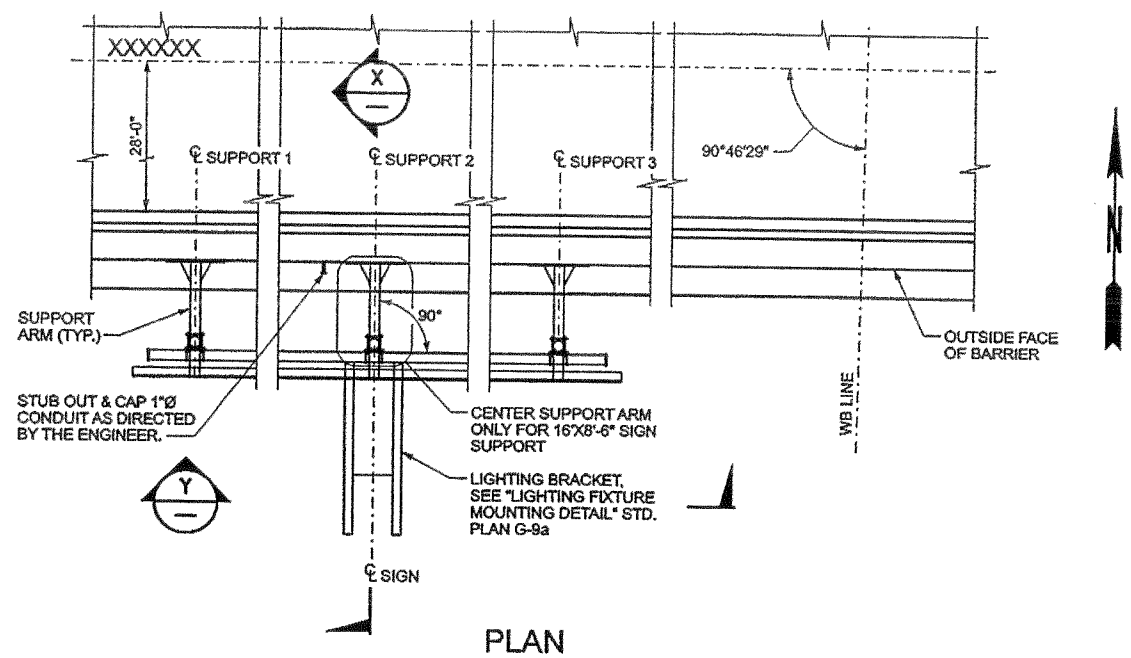

PLAN

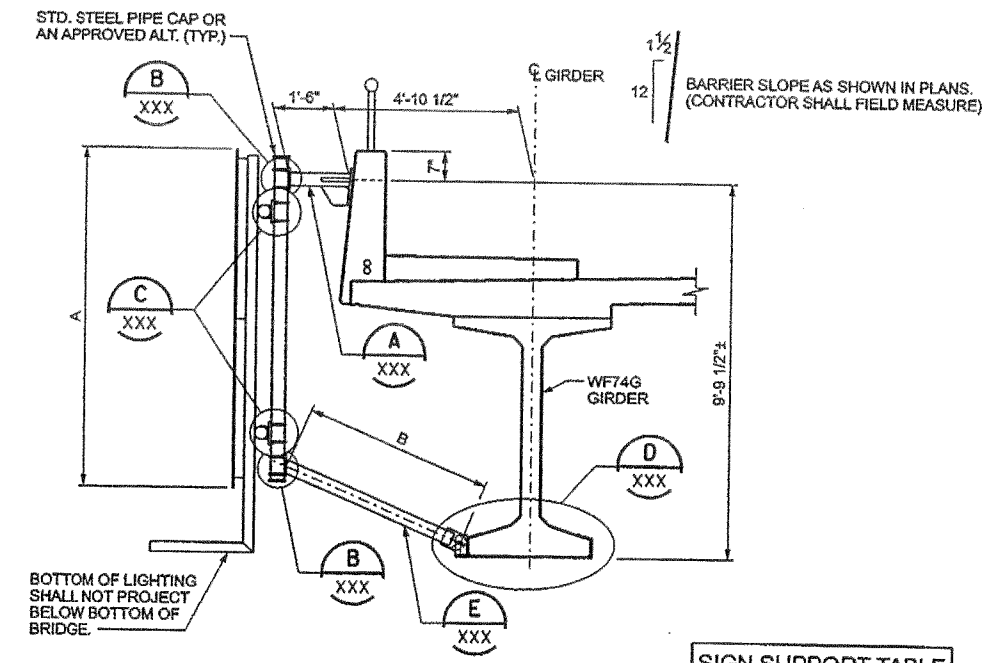

VIEW (X / —)

DETAILS ARE SAME FOR SUPPORTS 1, 2 AND 3

SIGN SUPPORT TABLE		
16' x 8'-6"	8'-6"	5'-0 5/8"
9'-7"	7'-0"	5'-10 1/4"

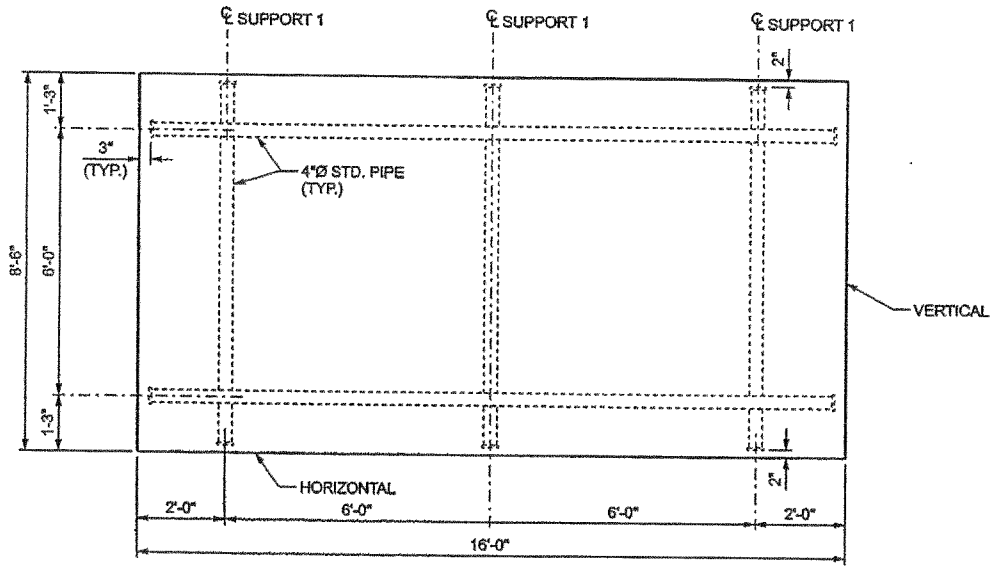

VIEW-16' x 8'-6" SIGN (Y / —) SIMILAR

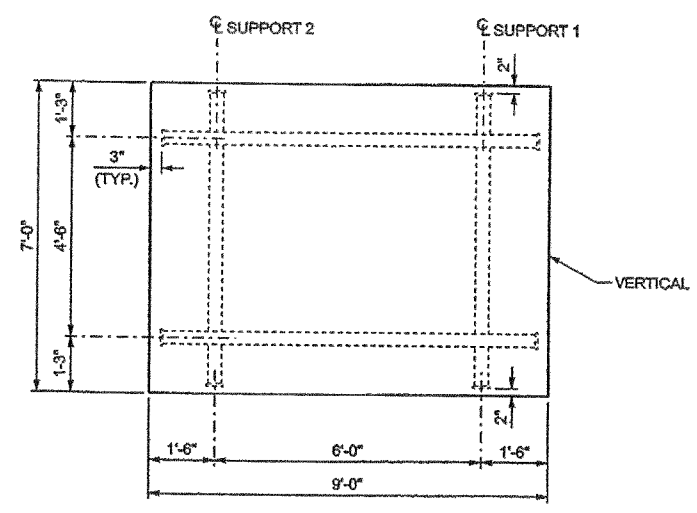

VIEW-9'X7' SIGN (Y / —) SIMILAR

2 REQUIRED

NOTES:
1. DIMENSIONS SHOWN ARE AT CENTERLINE OF SIGN. CONTRACTOR SHALL FIELD MEASURE TO VERIFY DIMENSIONS. CONTRACTOR SHALL ADJUST DIMENSIONS FOR LONGITUDINAL SLOPE SO SIGN IS VERTICAL AND HORIZONTAL.
2. STRUCTURAL CARBON STEEL SHALL CONFORM TO AASHTO M270, GRADE 36.
3. U-BOLTS, NUTS AND WASHERS SHALL BE ASTM F593 AND ASTM F594, TYPE 304.
4. PIPES SHALL BE ASTM A53 GRADE B OR ASTM A500 GRADE B.
5. ALL NON-STAINLESS STEEL PARTS SHALL BE GALVANIZED IN ACCORDANCE WITH AASHTO M111 AFTER FABRICATION.
6. EPOXY RESIN IN ACCORDANCE WITH SECTION 9-26.1.

FILE NAME			
TIME			
DATE			
PLOTTED BY			
DESIGNED BY			
ENTERED BY			
CHECKED BY			
PROJ. ENGR.			
REGIONAL ADM.	REVISION	DATE	BY

REGION NO.	STATE	FED.AID PROJ.NO.
10	WASH	
JOB NUMBER		
CONTRACT NO.		LOCATION NO.

P.E. STAMP BOX DATE

P.E. STAMP BOX DATE

HNTB

Perteet Inc.
425-252-7700 | 1-800-615-9900
2707 Colby Avenue, Suite 900
Everett, Washington 98201

SR 167 MP ??.?? TO MP ??.??
SR167
HOT LANES
KING COUNTY JUNE 2006

EXISTING BRIDGE MOUNTED SIGN BRACKET - LAYOUT

S12

SHEET OF SHEETS

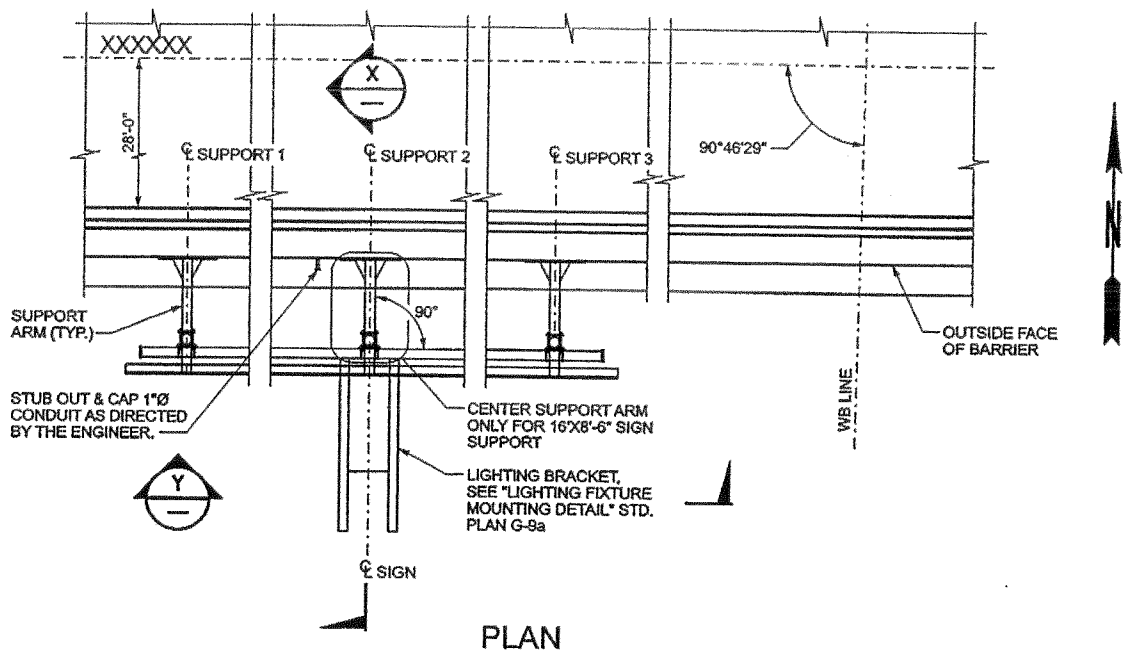

PLAN

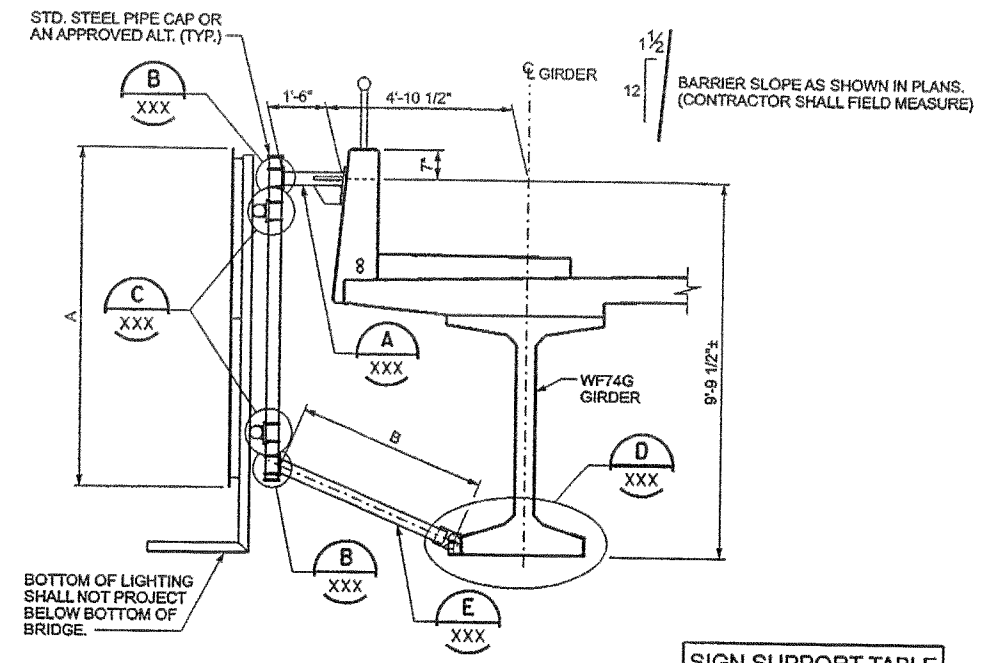

VIEW X

DETAILS ARE SAME FOR SUPPORTS 1, 2 AND 3

SIGN SUPPORT TABLE		
16' x 8'-6"	8'-6"	5'-0 5/8"
9'-7"	7'-0"	5'-10 1/4"

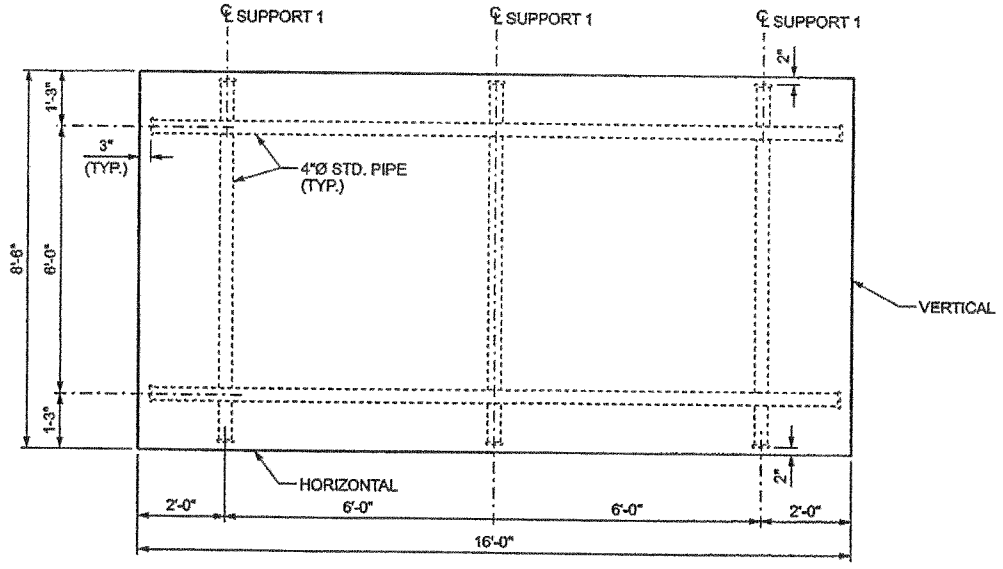

VIEW-16' x 8'-6" SIGN Y SIMILAR

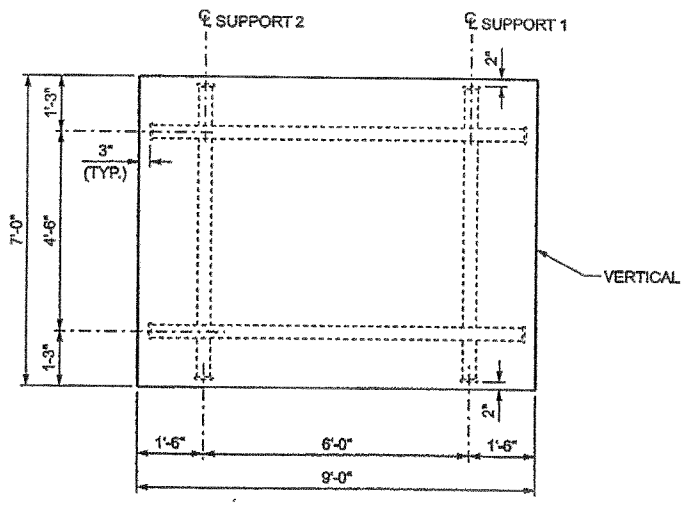

VIEW-9'X7' SIGN Y SIMILAR

2 REQUIRED

NOTES:
1. DIMENSIONS SHOWN ARE AT CENTERLINE OF SIGN. CONTRACTOR SHALL FIELD MEASURE TO VERIFY DIMENSIONS. CONTRACTOR SHALL ADJUST DIMENSIONS FOR LONGITUDINAL SLOPE SO SIGN IS VERTICAL AND HORIZONTAL.
2. STRUCTURAL CARBON STEEL SHALL CONFORM TO AASHTO M270, GRADE 36.
3. U-BOLTS, NUTS AND WASHERS SHALL BE ASTM F593 AND ASTM F594, TYPE 304.
4. PIPES SHALL BE ASTM A53 GRADE B OR ASTM A500 GRADE B.
5. ALL NON-STAINLESS STEEL PARTS SHALL BE GALVANIZED IN ACCORDANCE WITH AASHTO M111 AFTER FABRICATION.
6. EPOXY RESIN IN ACCORDANCE WITH SECTION 9-26.1.

FILE NAME			
TIME			
DATE			
PLOTTED BY			
DESIGNED BY			
ENTERED BY			
CHECKED BY			
PROJ. ENGR.			
REGIONAL ADM.	REVISION	DATE	BY

REGION NO.	STATE	FED.AID PROJ.NO.
10	WASH	
JOB NUMBER		
CONTRACT NO.		LOCATION NO.

P.E. STAMP BOX DATE

P.E. STAMP BOX DATE

HNTB

Perteet Inc.
425-252-7700 | 1-800-615-9900
2707 Colby Avenue, Suite 900
Everett, Washington 98201

SR 167 MP ??.?? TO MP ??.??
SR167
HOT LANES
KING COUNTY JUNE 2006

BRIDGE MOUNTED SIGN BRACKET
NO. 1 - LAYOUT

S13

SHEET OF SHEETS

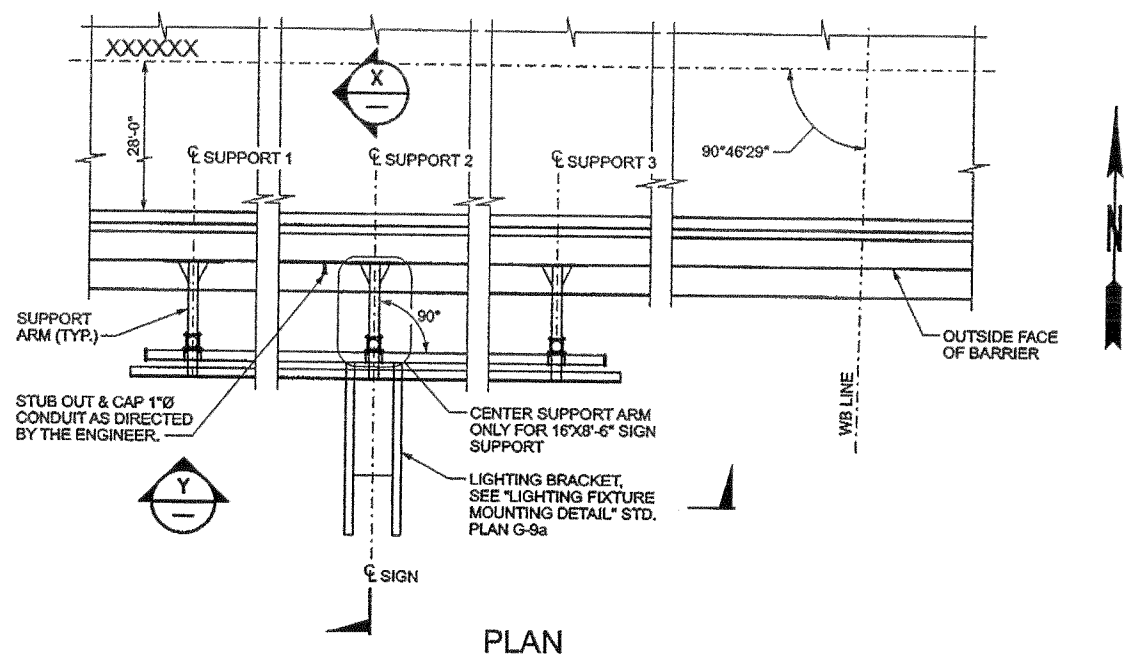

PLAN

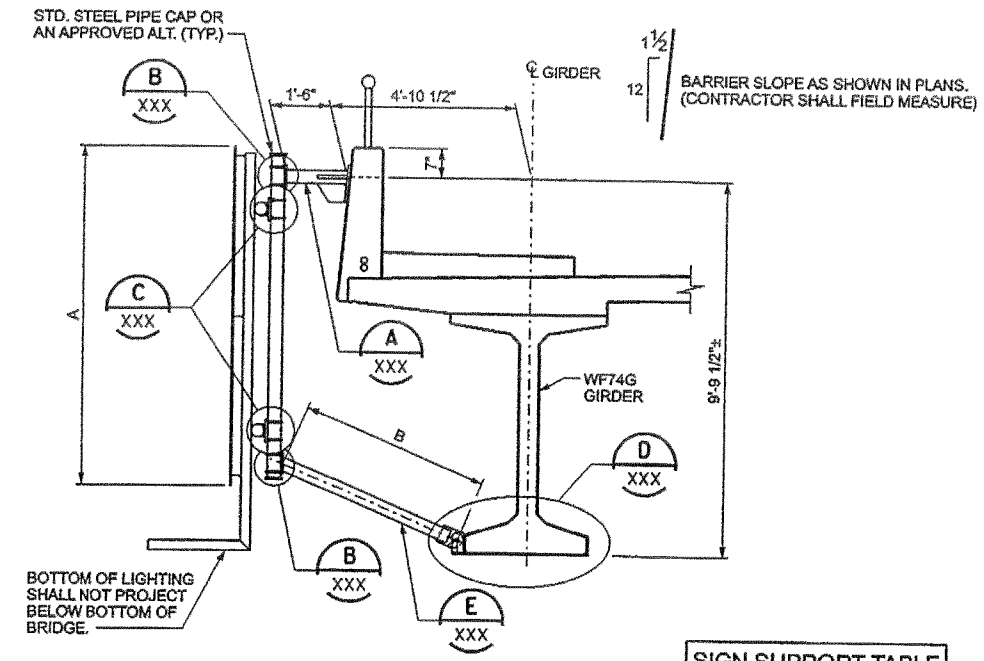

VIEW X

DETAILS ARE SAME FOR SUPPORTS 1, 2 AND 3

SIGN SUPPORT TABLE		
16' x 8'-6"	8'-6"	5'-0 5/8"
9'-7"	7'-0"	5'-10 1/4"

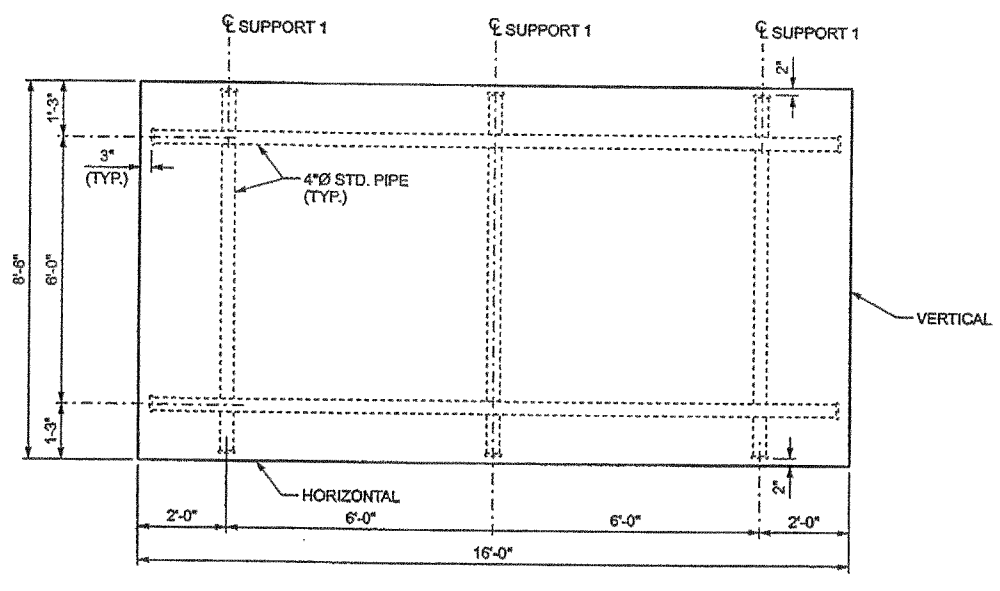

VIEW-16' x 8'-6" SIGN Y SIMILAR

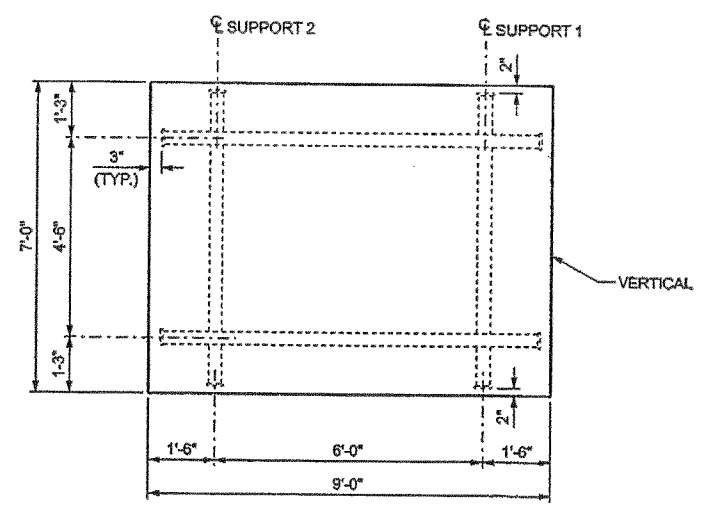

VIEW-9'X7' SIGN Y SIMILAR

2 REQUIRED

NOTES:
1. DIMENSIONS SHOWN ARE AT CENTERLINE OF SIGN. CONTRACTOR SHALL FIELD MEASURE TO VERIFY DIMENSIONS. CONTRACTOR SHALL ADJUST DIMENSIONS FOR LONGITUDINAL SLOPE SO SIGN IS VERTICAL AND HORIZONTAL.
2. STRUCTURAL CARBON STEEL SHALL CONFORM TO AASHTO M270, GRADE 36.
3. U-BOLTS, NUTS AND WASHERS SHALL BE ASTM F593 AND ASTM F594, TYPE 304.
4. PIPES SHALL BE ASTM A53 GRADE B OR ASTM A500 GRADE B.
5. ALL NON-STAINLESS STEEL PARTS SHALL BE GALVANIZED IN ACCORDANCE WITH AASHTO M111 AFTER FABRICATION.
6. EPOXY RESIN IN ACCORDANCE WITH SECTION 9-26.1.

FILE NAME			
TIME			
DATE			
PLOTTED BY			
DESIGNED BY			
ENTERED BY			
CHECKED BY			
PROJ. ENGR.			
REGIONAL ADM.	REVISION	DATE	BY

REGION NO.	STATE	FED.AID PROJ.NO.
10	WASH	
JOB NUMBER		
CONTRACT NO.		LOCATION NO.

P.E. STAMP BOX DATE

P.E. STAMP BOX DATE

HNTB

Perteet Inc.
425-252-7700 | 1-800-615-9900
2707 Colby Avenue, Suite 900
Everett, Washington 98201

SR 167 MP ??.?? TO MP ??.??
SR167
HOT LANES
KING COUNTY JUNE 2006

BRIDGE MOUNTED SIGN BRACKET
NO. 2 - LAYOUT

S14

SHEET OF SHEETS

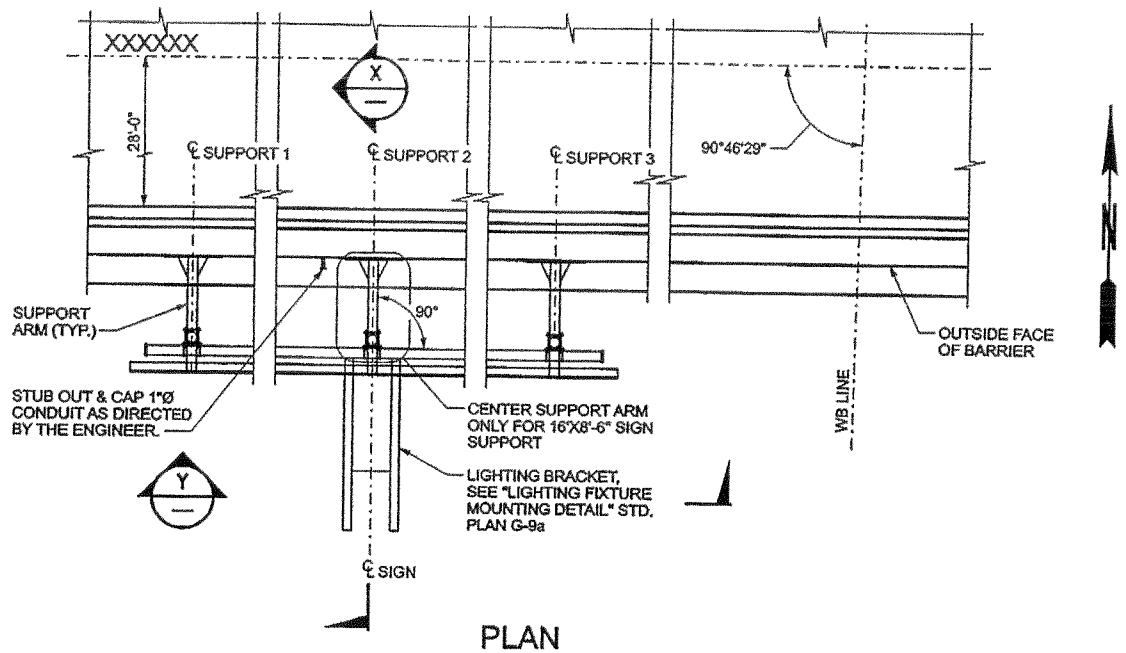

PLAN

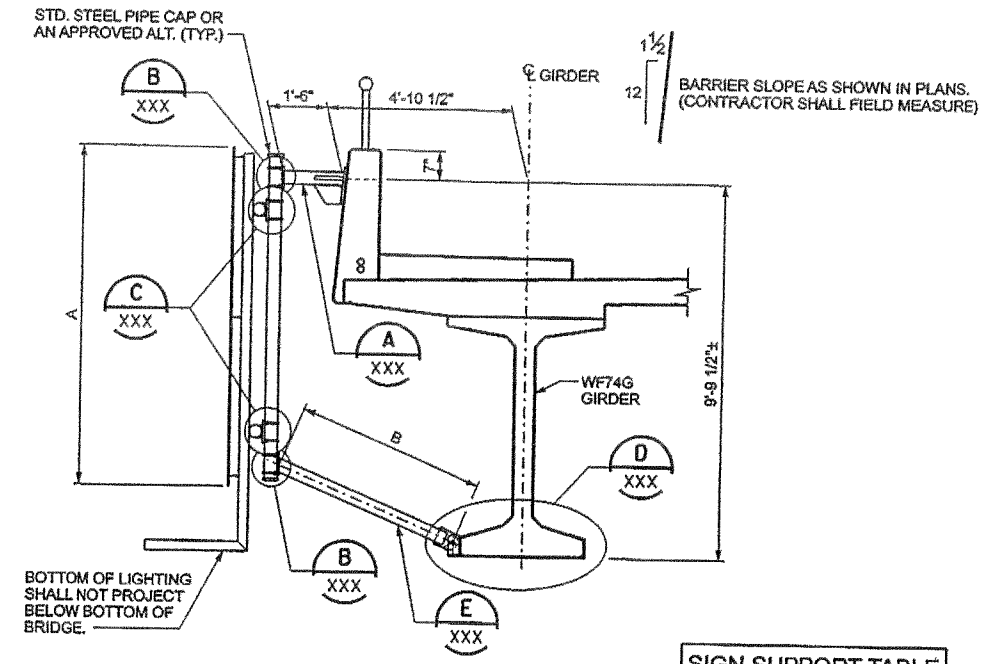

VIEW X

DETAILS ARE SAME FOR SUPPORTS 1, 2 AND 3

SIGN SUPPORT TABLE		
16' x 8'-6"	8'-6"	5'-0 5/8"
9'-7"	7'-0"	5'-10 1/4"

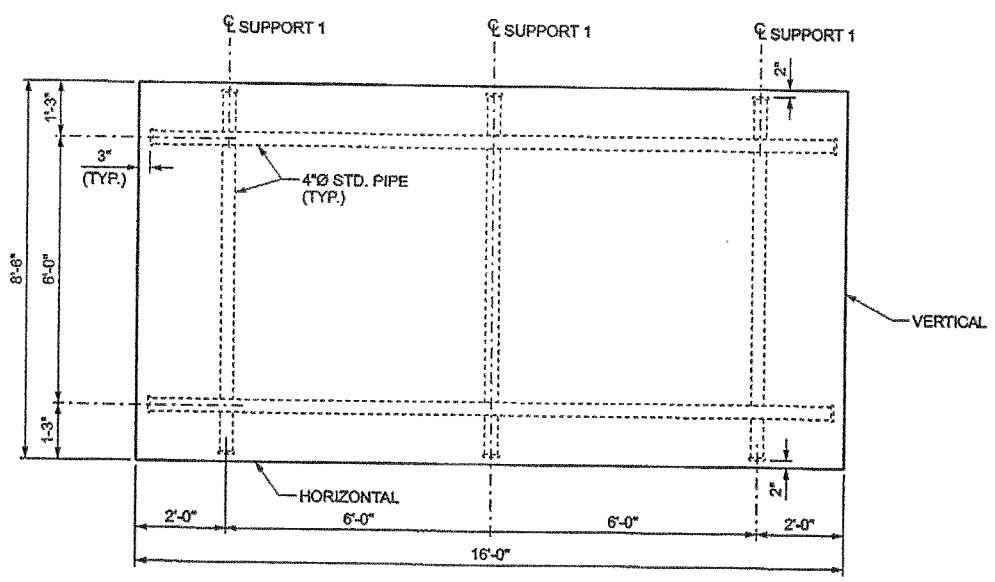

VIEW-16' x 8'-6" SIGN Y

SIMILAR

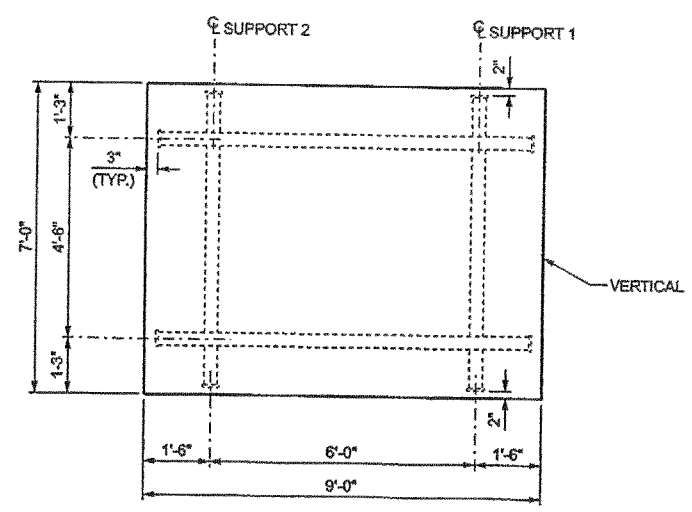

VIEW-9'X7' SIGN Y

2 REQUIRED

SIMILAR

NOTES:
1. DIMENSIONS SHOWN ARE AT CENTERLINE OF SIGN. CONTRACTOR SHALL FIELD MEASURE TO VERIFY DIMENSIONS. CONTRACTOR SHALL ADJUST DIMENSIONS FOR LONGITUDINAL SLOPE SO SIGN IS VERTICAL AND HORIZONTAL.
2. STRUCTURAL CARBON STEEL SHALL CONFORM TO AASHTO M270, GRADE 36.
3. U-BOLTS, NUTS AND WASHERS SHALL BE ASTM F593 AND ASTM F594, TYPE 304.
4. PIPES SHALL BE ASTM A53 GRADE B OR ASTM A500 GRADE B.
5. ALL NON-STAINLESS STEEL PARTS SHALL BE GALVANIZED IN ACCORDANCE WITH AASHTO M111 AFTER FABRICATION.
6. EPOXY RESIN IN ACCORDANCE WITH SECTION 9-26.1.

FILE NAME			
TIME			
DATE			
PLOTTED BY			
DESIGNED BY			
ENTERED BY			
CHECKED BY			
PROJ. ENGR.			
REGIONAL ADM.	REVISION	DATE	BY

REGION NO.	STATE	FED.AID PROJ.NO.
10	WASH	
JOB NUMBER		
CONTRACT NO.		LOCATION NO.

P.E. STAMP BOX DATE

P.E. STAMP BOX DATE

HNTB

Perteet Inc.
425-252-7700 | 1-800-615-9900
2707 Colby Avenue, Suite 900
Everett, Washington 98201

SR 167 MP ??.?? TO MP ??.??
SR167
HOT LANES
KING COUNTY JUNE 2006

BRIDGE MOUNTED SIGN BRACKET
NO. 3 - LAYOUT

S15

SHEET OF SHEETS

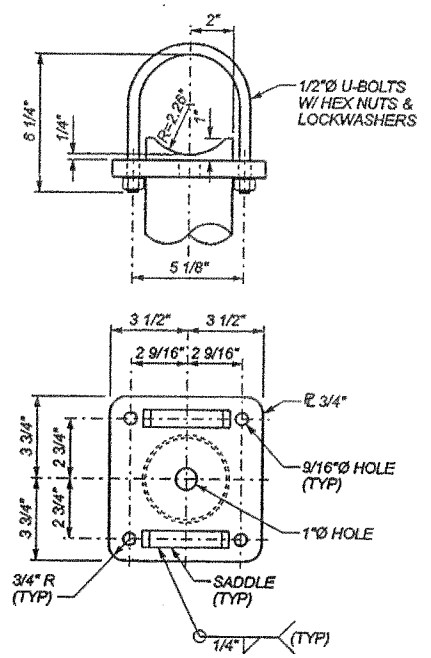

DETAIL B XXX

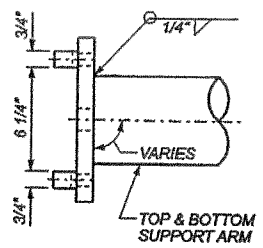

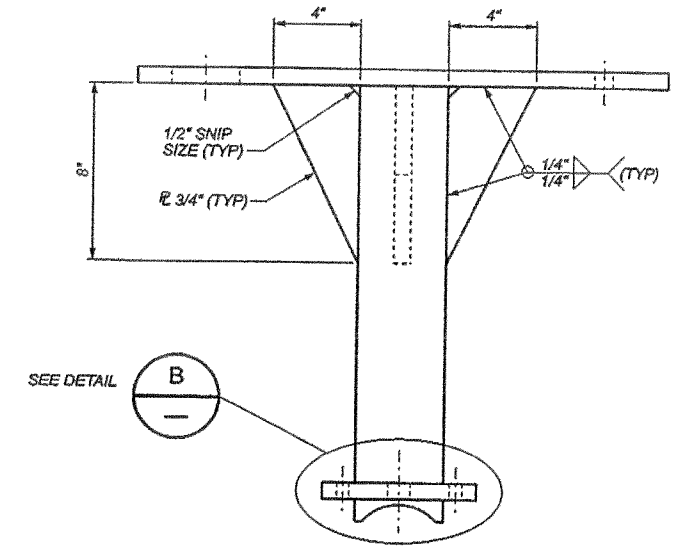

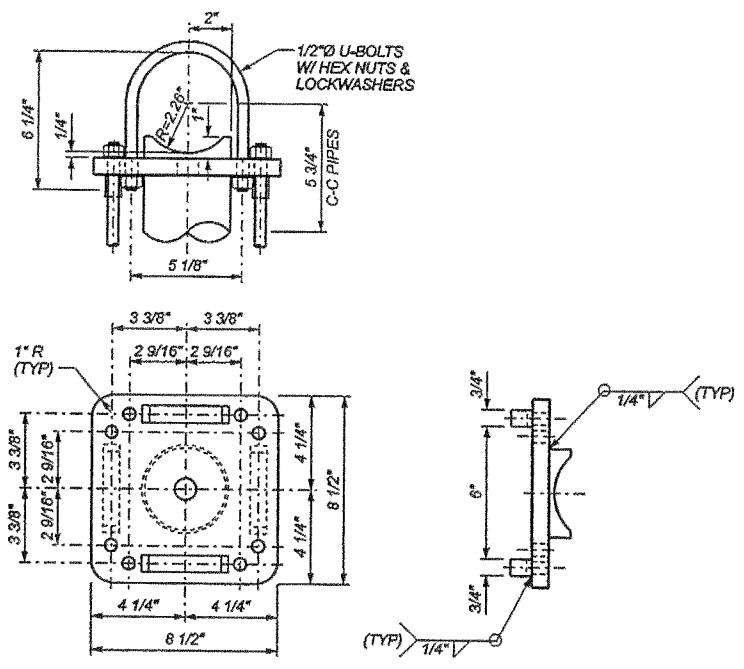

DETAIL C XXX

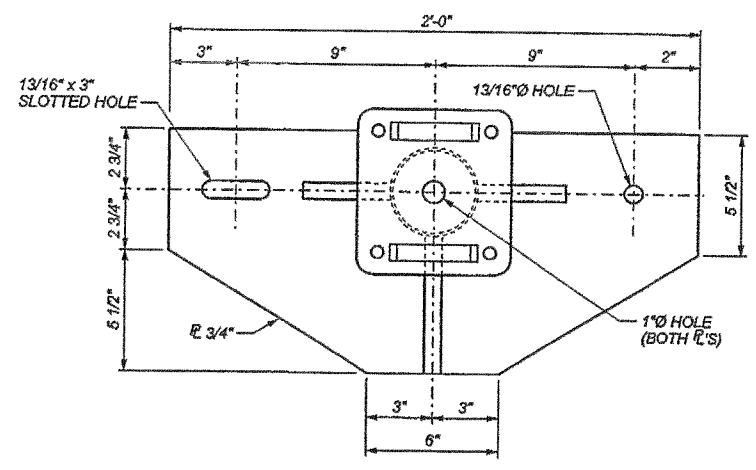

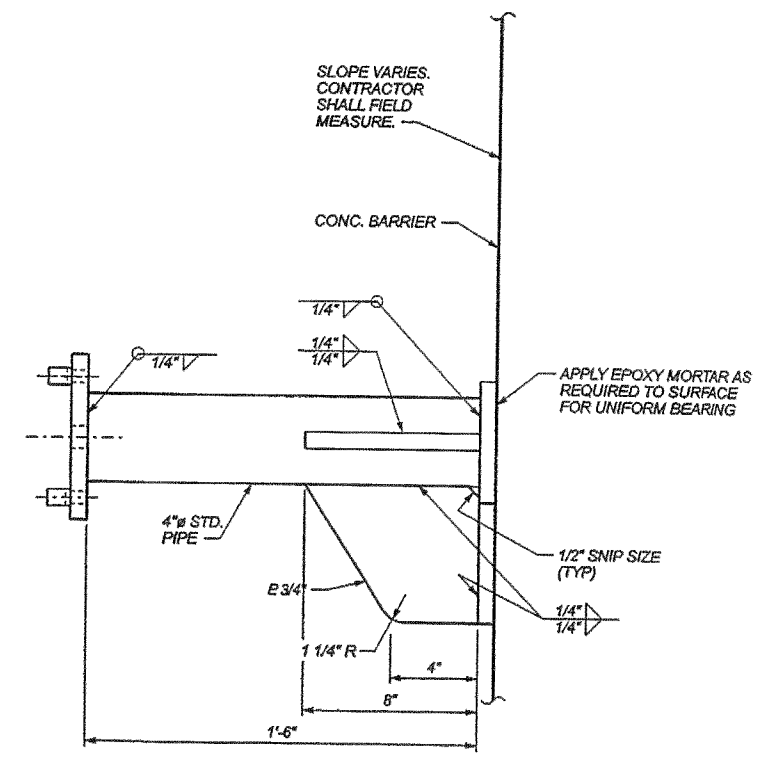

DETAIL A XXX

FILE NAME						
TIME				REGION NO.	STATE	FED.AID PROJ.NO.
DATE				10	WASH	
PLOTTED BY				JOB NUMBER		
DESIGNED BY						
ENTERED BY						
CHECKED BY				CONTRACT NO.		LOCATION NO.
PROJ. ENGR.						
REGIONAL ADM.	REVISION	DATE	BY			

P.E. STAMP BOX DATE

P.E. STAMP BOX DATE

HNTB

Perteet Inc.
425-252-7700 | 1-800-615-9900
2707 Colby Avenue, Suite 900
Everett, Washington 98201

SR 167 MP ??.?? TO MP ??.??
SR167
HOT LANES
KING COUNTY JUNE 2006

BRIDGE MOUNTED SIGN BRACKETS
1, 2 & 3 - DETAILS 1

S16

SHEET OF SHEETS

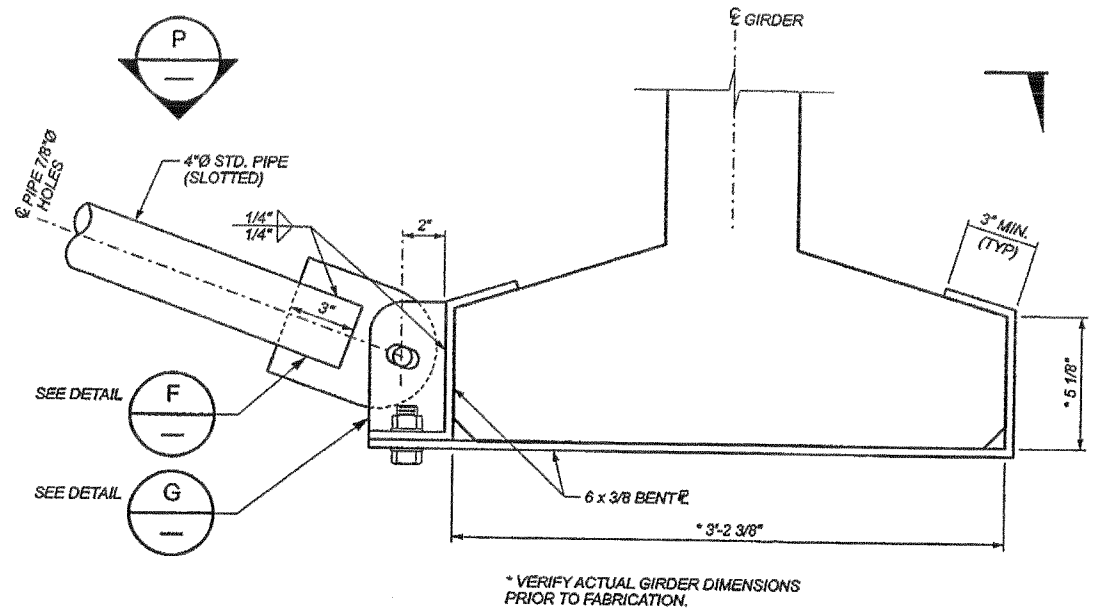

DETAIL D XXX

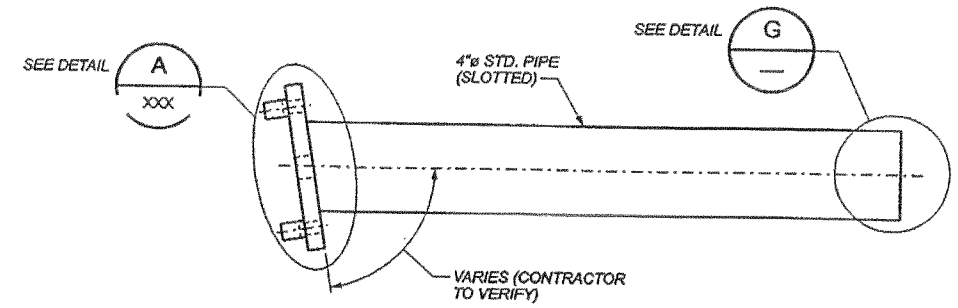

BOTTOM SUPPORT ARM

DETAIL E XXX

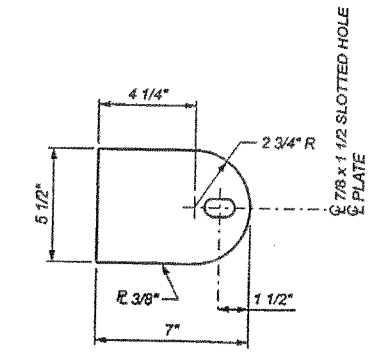

DETAIL F

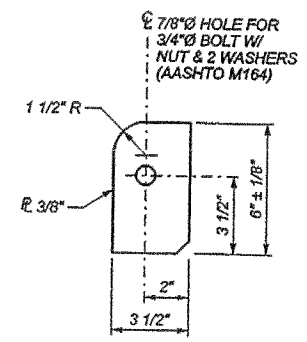

DETAIL G

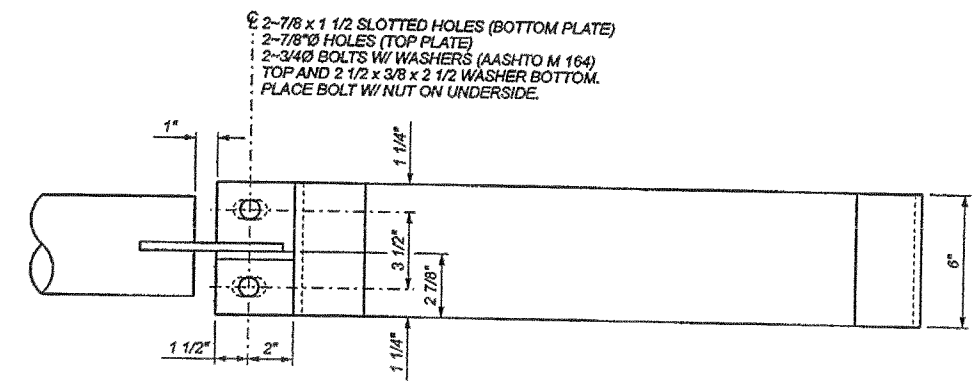

VIEW P

FILE NAME						
TIME						
DATE				REGION NO. 10	STATE WASH	FED.AID PROJ.NO.
PLOTTED BY				JOB NUMBER		
DESIGNED BY						
ENTERED BY						
CHECKED BY				CONTRACT NO.	LOCATION NO.	
PROJ. ENGR.						
REGIONAL ADM.	REVISION	DATE	BY			

P.E. STAMP BOX DATE

P.E. STAMP BOX DATE

HNTB

Perteet Inc.
425-252-7700 | 1-800-615-9900
2707 Colby Avenue, Suite 900
Everett, Washington 98201

SR 167 MP ??.?? TO MP ??.??
SR167
HOT LANES
KING COUNTY JUNE 2006

BRIDGE MOUNTED SIGN BRACKETS
1, 2 & 3 - DETAILS 2

S17

SHEET OF SHEETS

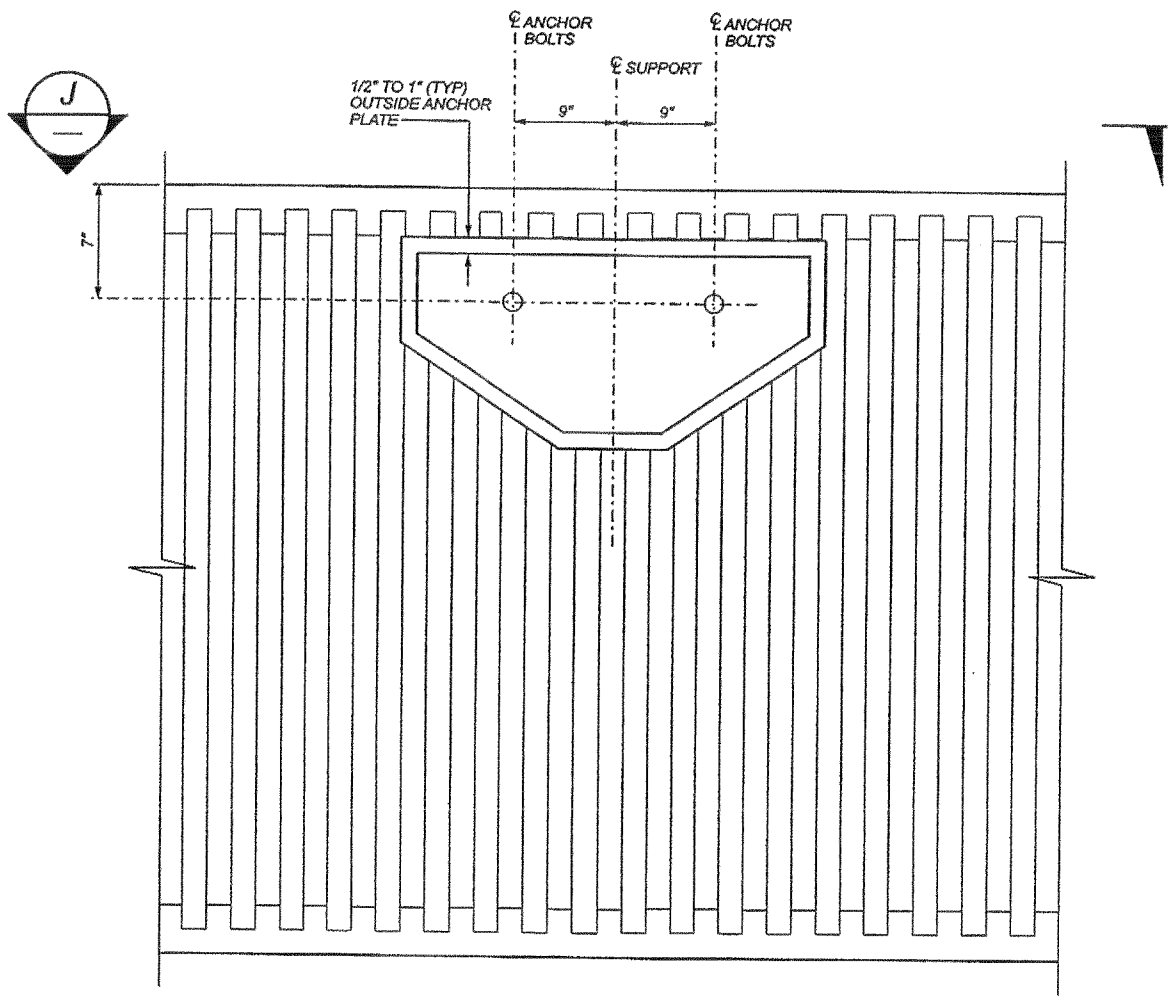

ANCHORAGE IN FRACTURE FIN AREA

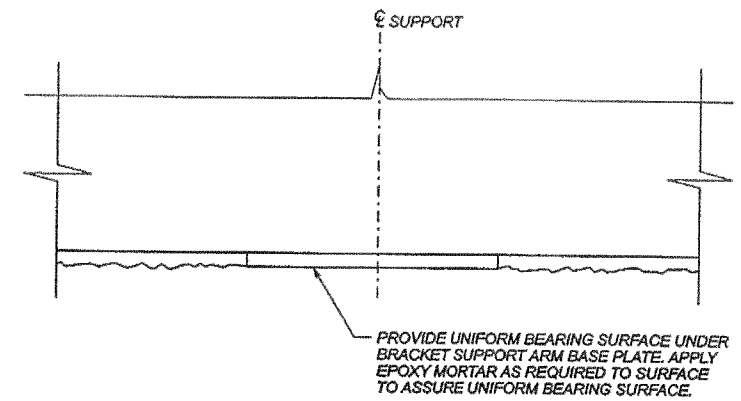

SECTION J

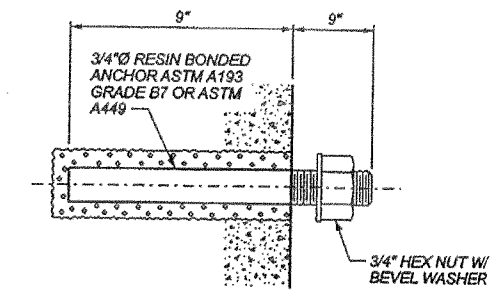

ANCHORAGE BOLT DETAIL

FILE NAME						
TIME				REGION NO. 10	STATE WASH	FED.AID PROJ.NO.
DATE				JOB NUMBER		
PLOTTED BY						
DESIGNED BY						
ENTERED BY				CONTRACT NO.	LOCATION NO.	
CHECKED BY						
PROJ. ENGR.						
REGIONAL ADM.	REVISION	DATE	BY			

P.E. STAMP BOX DATE

P.E. STAMP BOX DATE

HNTB

Perteet Inc.
425-252-7700 | 1-800-615-9900
2707 Colby Avenue, Suite 900
Everett, Washington 98201

SR 167 MP ??.?? TO MP ??.??
SR167
HOT LANES
KING COUNTY JUNE 2006

BRIDGE MOUNTED SIGN BRACKETS
1, 2 & 3 - DETAILS 3

S18

SHEET OF SHEETS