INTERSTATE 405 Corridor Program
Congestion Relief & Bus Rapid Transit Projects

APPENDIX U1

King County Sewer As-Builts

I-405, SR520 to SR522 Stage 1 (Kirkland Stage 1)

Request For Proposal
July 15, 2005
Revised, Addendum 2
August 5, 2005

Washington State Department of Transportation

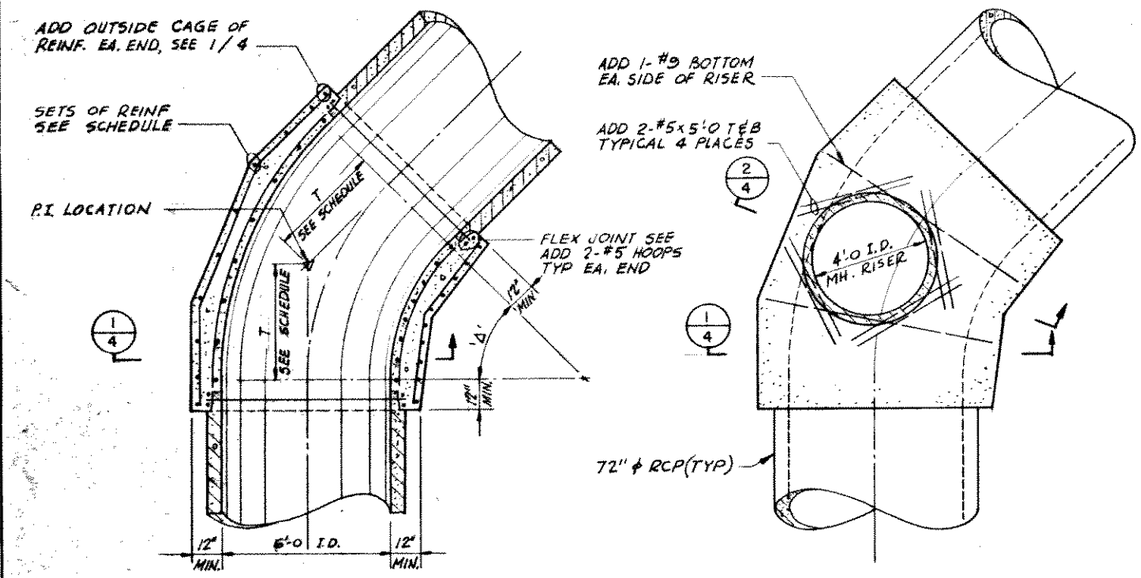

BOTTOM PLAN

TOP PLAN

TYPICAL ANGLE STRUCTURE AND MANHOLE (A/VAR)

SCALE: 3/8" = 1'-0

ANGLE STRUCTURE AND MANHOLE SCHEDULE			
SIZE OF RCP	DEFLECTION ANGLE	T	NO. OF SETS OF REINF.
72" I.D.	LESS THAN 35°	3'-0	7
	35° TO 65°	4'-0	8
	65° TO 82°	5'-0	9
	82° & LARGER	6'-0	10

M LOAD RCP DESIGN ASSUMPTIONS

1. DESIGN METHOD SHALL BE ULTIMATE STRENGTH DESIGN IN ACCORDANCE WITH A.C.I. CODE.
2. LOAD FACTOR K = 1.8.
3. +M DENOTES TENSION ON INSIDE FACE.
4. +N DENOTES AXIAL COMPRESSION.
5. fc = 4,000 PSI MIN. AND 6,000 PSI MAX.
6. fy = 40,000 PSI.
7. STRESS DISTRIBUTION ON CONCRETE SHALL BE ASSUMED TO BE RECTANGULAR.
8. EFFECT OF COMPRESSIVE REINFORCEMENT SHALL BE NEGLECTED IN DESIGN OF SECTION.
9. CROWN OF PIPE SHALL HAVE SAME AMOUNT OF REINFORCEMENT AS THE INVERT.
10. CIRCUMFERENTIAL STEEL SHALL HAVE ONE-INCH MINIMUM COVER.
11. IF TWO LAYERS OR MORE THAN ONE SIZE OF RE-STEEL ARE USED, d USED IN DESIGN COMPUTATIONS SHALL BE THE EFFECTIVE d TO THE CENTROID OF THE STEEL GROUP.
12. Pu SHALL NOT EXCEED Pb AS COMPUTED BY THE A.C.I. CODE.
13. ϕ AS DEFINED BY PAR. 1900, ACI 318-63 SHALL EQUAL 1.0.

M LOAD RCP					
R.C.P.		FORCES ACTING ON SIDE		FORCES ACTING ON BOTTOM	
I.D.	TYPE	M-KIP FT	N-KIPS	M-KIP FT	N-KIPS
72"	M60	-6.0	7.5	6.0	0
72"	M110	-11.0	13.0	11.0	0

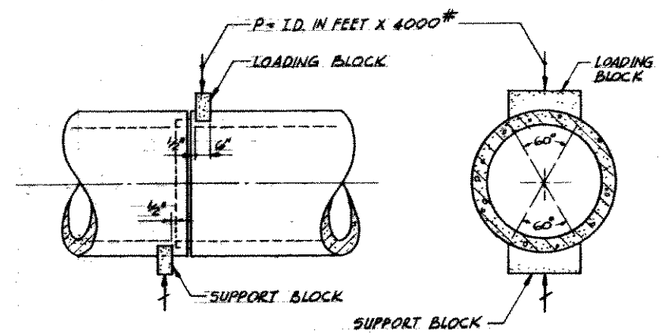

JOINT SHEAR TEST DETAIL (F/4)

NO SCALE

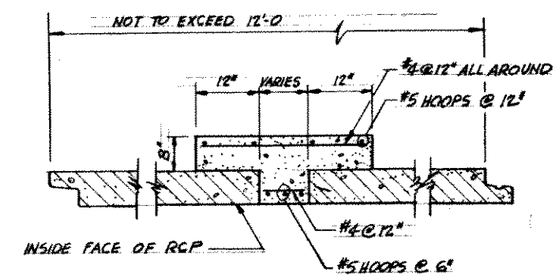

CLOSURE DETAIL (G/4)

NO SCALE

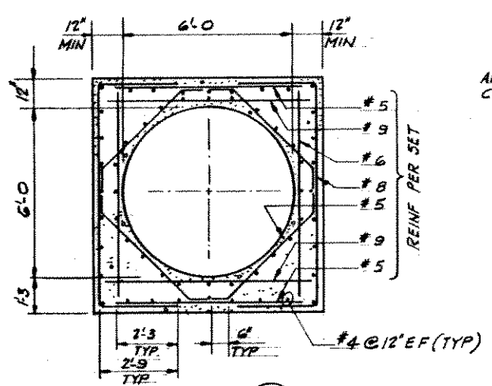

SECTION (1/4)

SCALE: 3/8" = 1'-0

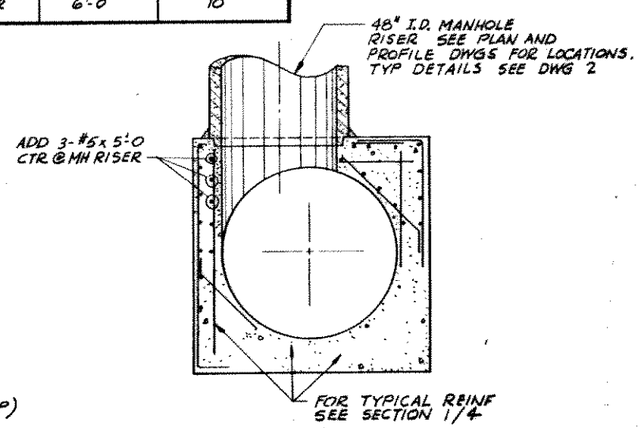

SECTION (2/4)

SCALE: 3/8" = 1'-0

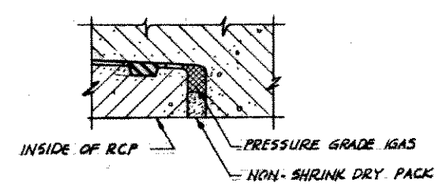

JOINT FILL DETAIL (H/4)

NO SCALE

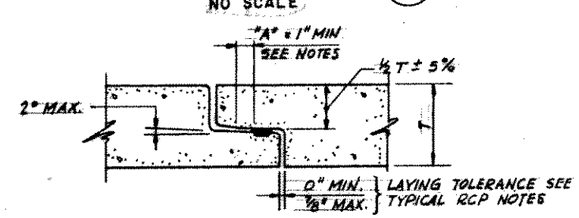

TYPICAL RCP JOINT DETAIL (J/4)

NO SCALE

TYPICAL RCP NOTES

1. JOINT GAPS EXCEEDING 7/8" WILL BE TREATED AS "DEFECTIVE WORKMANSHIP," AS PER SPECS.
2. JOINT GAPS EXCEEDING 1-1/4" OR THE ACTUAL "A" DIMENSION MINUS 1/4", WHICHEVER IS SMALLER, SHALL BE FILLED AS SHOWN IN DETAIL H/4.
3. ANY JOINT WHERE LEAKAGE EXCEEDS THE ALLOWABLE SHALL BE FILLED AS SHOWN.
4. DURING THE PIPE LAYING OPERATION, WHEN DIRECTED BY THE ENGINEER, THE CONTRACTOR SHALL ADJUST OR REPOSITION THE PIPE BEING LAID IN ORDER TO CORRECT A DEFECTIVE JOINT AS DEFINED ABOVE.
5. JOINT GAPS TO BE FILLED SHALL BE SAND-BLASTED TO REMOVE ALL LAITANCE PRIOR TO FILLING.

AS CONSTRUCTED

DATE AUG. 1970

104316

MARTIN C. DIRKS — STATE OF WASHINGTON — REGISTERED PROFESSIONAL ENGINEER

ROGER F. WILCOX — STATE OF WASHINGTON — REGISTERED PROFESSIONAL ENGINEER

DESIGNED MCD DRAWN WG CHECKED RFS	METROPOLITAN ENGINEERS BROWN AND CALDWELL — CAREY AND KRAMER HILL AND INGMAN — R W BECK AND ASSOCIATES	MUNICIPALITY OF METROPOLITAN SEATTLE SUBMITTED Design Engineer - Metropolitan Engineers RECOMMENDED Project Engineer - Metropolitan Engineers APPROVED Chief Engineer - Metropolitan Engineers APPROVED For Metropolitan Engineers APPROVED For Municipality of Metropolitan Seattle	SCALE AS NOTED DATE JULY 1969	FILE R 202R	RENTON SYSTEM	REDMOND INTERCEPTOR SECTION 1B TYPICAL ANGLE STRUCTURES, MANHOLES AND MISCELLANEOUS RCP DETAILS	DRAWING NUMBER C 4 SHEET NUMBER 4 OF 7

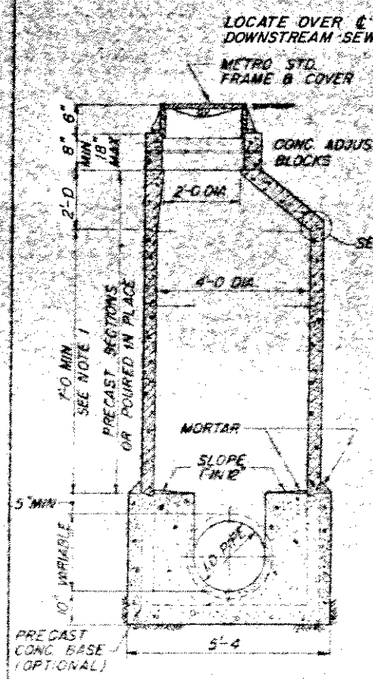

STANDARD TYPE A PRECAST MANHOLE
6" TO 21" (INCLUSIVE)

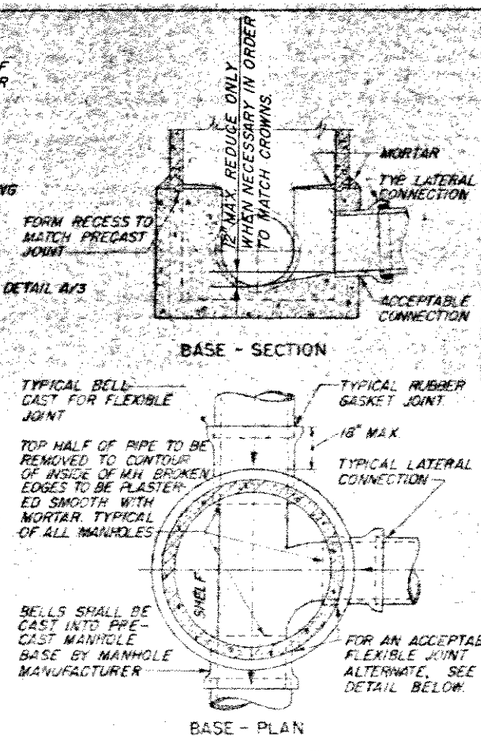

TYPICAL CONNECTION DETAIL

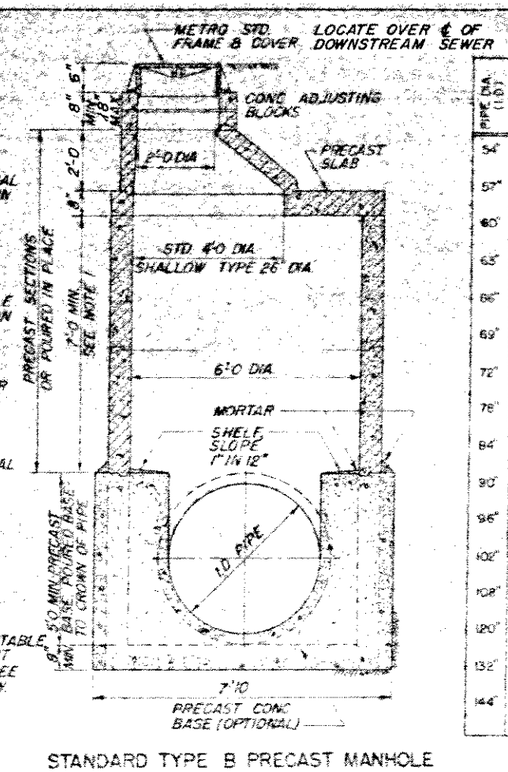

STANDARD TYPE B PRECAST MANHOLE
24" TO 48" (INCLUSIVE)

DIMENSIONS & REINFORCING STEEL FOR STANDARD TYPE C MANHOLES

PIPE DIA. (I.D.)	DEPTH OF INVERT	CONC. DIMENSIONS A	B	E	F	G	J	REINFORCING BARS: BOTTOM SLAB NO. & *	LENGTH	SIDE WALLS NO. & *	LENGTH	NO. & *	LENGTH	TOP SLAB NO. & *	LENGTH	NO. & *	LENGTH	NO. & *	LENGTH	NO. & *	LENGTH	NO. & *	LENGTH
										W				S				X				Z	
54"	10'-30"	6'-1	7'-4	12"	14"	12"	8"	9#5	4'-11	6#4		6'-1		16#5	4'-11	6#5		6'-1		2#5	5'-1	4#5	17
	31'-50"	6'-6	7'-7			15"		9#6				6'-1		22#5				8'-11			3'-10		17
57"	10'-30"	6'-9	7'-7			12"		8#5				6'-4		20#5				5'-6			4'-2		18
	31'-50"	6'-9	7'-10			15"		9#5				6'-4		22#5				8'-4			4'-2		18
60"	10'-30"	7'-0	7'-10			12"		8#5				6'-7		20#5				5'-7			4'-6		19
	31'-50"	7'-0	8'-1			15"		10#6				6'-7		26#5				8'-7			4'-6		19
63"	10'-30"	7'-3	8'-1			12"		9#5				6'-10		22#5				5'-10			4'-10		20
	31'-50"	7'-3	8'-4			15"		10#6				6'-10		24#5				8'-10			4'-10		20
66"	10'-30"	7'-6	8'-4			12"		10#5				7'-1		22#5				5'-1			5'-3		21
	31'-50"	7'-6	8'-7			15"		11#6				7'-1		26#5				8'-1			5'-8		21
69"	10'-30"	7'-9	8'-7			12"		10#5				7'-4		24#5				5'-4			5'-7		22
	31'-50"	7'-9	8'-10			15"		12#6				7'-4		26#5				8'-4			5'-7		22
72"	10'-30"	8'-0	8'-10			12"		10#5				7'-7		24#5				5'-7			5'-11		23
	31'-50"	8'-0	9'-1	12"	14"	15"	8"	12#6	4'-11			7'-7		26#5	4'-11	10#4		8'-8			5'-11		23
78"	10'-30"	8'-8	9'-7	13"	15"	14"	12"	10#5	5'-7			8'-3		30#5	5'-7	12#4		9'-2			7'-3		24
	31'-50"	8'-8	9'-8			15"		12#6		6#4		8'-3		30#5				9'-3			7'-3	4#5	24
84"	10'-30"	9'-2	10'-1			14"		10#5		7#4		8'-9		32#5				9'-8			7'-11	6#5	26
	31'-50"	9'-2	10'-2	13"	15"	15"		12#6				8'-9		32#5				9'-9					26
90"	10'-30"	9'-10	10'-9	14"	16"	14"		10#5				9'-5		26#6				10'-4			8'-5		28
	31'-50"	9'-10	10'-10			15"		12#6				9'-5		26#6				10'-5			8'-5		28
96"	10'-30"	10'-4	11'-3			14"		11#5				9'-11		28#6				10'-10			8'-11		30
	31'-50"	10'-4	11'-4	14"	16"	15"		12#6				9'-11		28#6				10'-11			8'-11		30
102"	10'-30"	11'-0	11'-10	15"	17"	14"		11#5				10'-7		32#6				11'-5			10'-7		32
	31'-50"	11'-0	11'-11			15"		14#6		7#4		10'-7		32#6		12#4		11'-6			10'-7		32
108"	10'-30"	11'-6	12'-4			14"		12#5		5#5		11'-4		36#6		14#4		11'-11			11'-4		34
	31'-50"	11'-6	12'-5	15"	17"	15"		16#6				11'-4		36#6				12'-0			11'-4		34
120"	10'-30"	12'-8	13'-6	16"	18"	14"		13#5				12'-3		42#6				13'-1			12'-3		37
	31'-50"	12'-8	13'-7	16"	18"	15"		15#6		8#5		12'-3		42#6		14#4		13'-2			12'-3		37
132"	10'-30"	13'-10	14'-8	17"	19"	14"		16#5		6#5		13'-6		50#6		16#4		14'-3			13'-5		41
	31'-50"	13'-10	14'-9	17"	19"	15"		16#6				13'-5		50#6				14'-3			13'-5		41
144"	10'-30"	15'-0	15'-10	18"	20"	14"		15#5				14'-7		40#6				15'-5			14'-7		45
	31'-50"	15'-0	15'-11	18"	20"	15"	12"	17#6	5'-7	6#5		14'-7		40#7	5'-7	16#4		15'-6		13#6	5'-7	4#5	14'-7	2#5	7'-11	2#5	4'-3	6#5	45

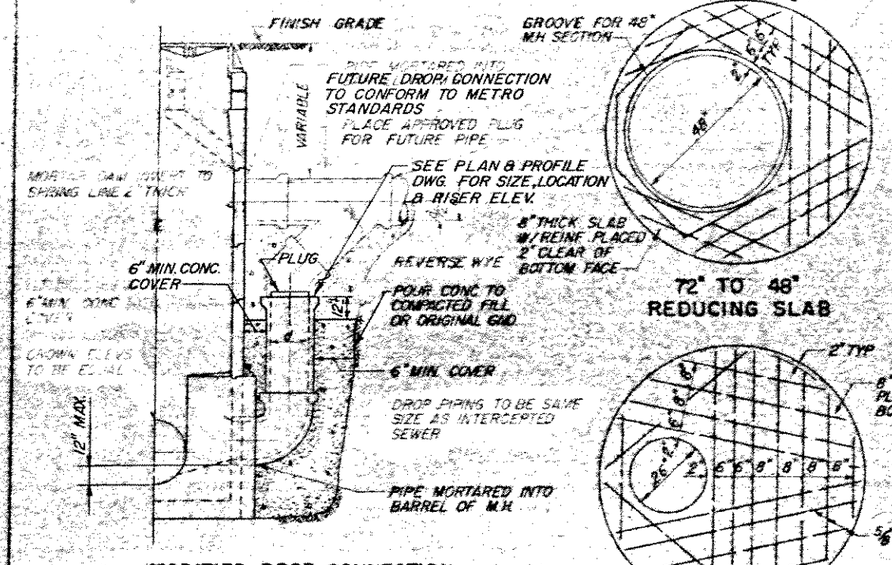

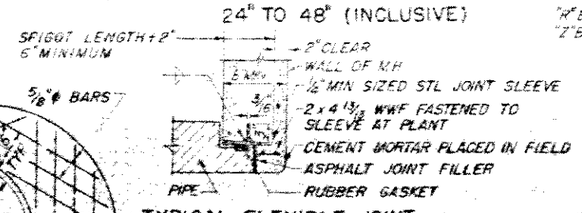

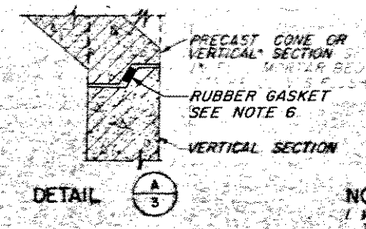

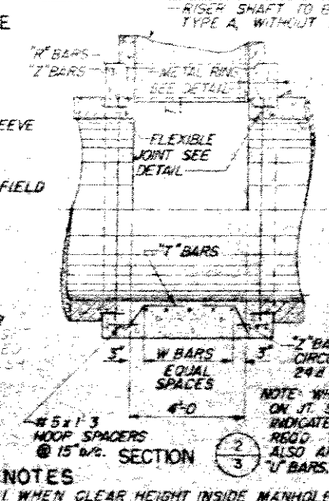

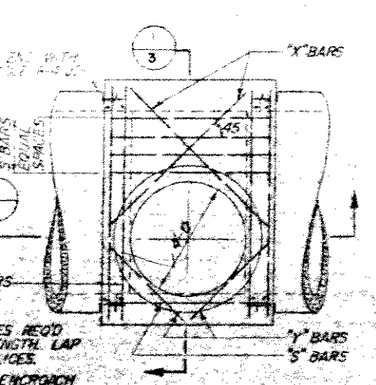

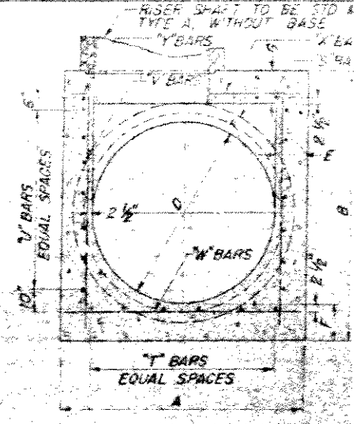

STANDARD TYPE C MANHOLE
54" TO 144" (INCLUSIVE)

NOTES

1. WHEN CLEAR HEIGHT INSIDE MANHOLE IS LESS THAN 7 FEET, PLACE ADJUSTING BLOCKS DIRECTLY ON THE REDUCING SLAB. WHERE CLEAR HEIGHT IS LESS THAN 3 FEET, MANHOLE SHALL BE CONSTRUCTED AS DIRECTED BY THE ENGINEER.
2. MANHOLE STEPS ARE NOT REQUIRED.
3. PRECAST VERTICAL SECTIONS SHALL CONFORM TO CPAW 102 EXCEPT WHERE OTHERWISE NOTED. CONTRACTOR SHALL SUBMIT DESIGN DRAWINGS FOR APPROVAL.
4. ALL PIPES SHALL BE CONNECTED TO MANHOLES WITH FLEXIBLE JOINTS PER TYPICAL DETAIL. [illegible]
5. METAL SURFACES OF THE TYPICAL FLEXIBLE JOINT NOT PERMANENTLY EMBEDDED IN CONCRETE SHALL BE BLAST CLEANED AND COATED WITH 2 COATS OF COAL TAR, EPOXY RESIN COATING, PITT CHEM. TARSET OR INERTOL POXITAR, 15 MIL MIN THICKNESS.
6. ALL MANHOLE RISER JOINTS SHALL BE A RUBBER GASKET TYPE. DETAILS OF THE JOINT AND GASKET SHALL BE SUBMITTED TO THE ENGINEER FOR APPROVAL PRIOR TO FABRICATION.

AS CONSTRUCTED
DATE AUG. 1970

104315

ROGER F. WILLCOX — STATE OF WASHINGTON — REGISTERED PROFESSIONAL ENGINEER

REV.	METROPOLITAN ENGINEERS	MUNICIPALITY OF METROPOLITAN SEATTLE	R202R	RENTON SYSTEM	REDMOND INTERCEPTOR SECTION 1B	C3
RFS		Ray F. Sheffield · Ray F. Sheffield · Roger F. Willcox · R. F. Willcox · Charles W. Ebb	JULY 1969		SANITARY SEWER MANHOLES	3 7

NO SCALE

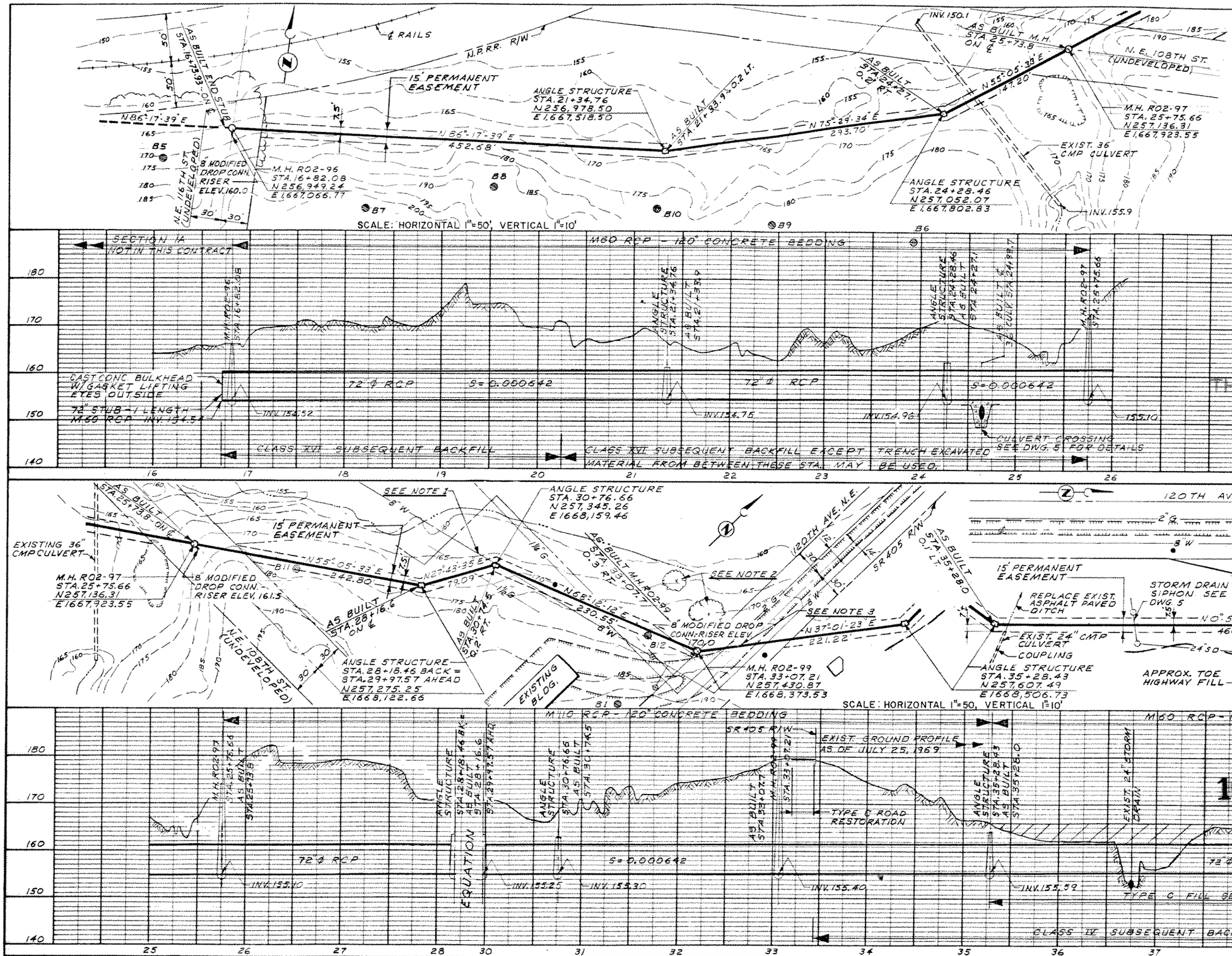

SPECIAL CONSTRUCTION NOTES

1. VERIFY LOCATION OF 8" AC WATER LINE PRIOR TO CONSTRUCTION & RELOCATE AS NECESSARY.
2. EXISTING TREES NOT TO BE DAMAGED DURING CONSTRUCTION.
3. CONTRACTOR SHALL MAINTAIN ACCESS TO PROPERTY SERVED BY 120TH AVE. N.E. SOUTH OF INTERCEPTOR CROSSING.
4. EXISTING 8" CONCRETE CULVERT. REPLACE IF DAMAGED DURING CONSTRUCTION & DITCH TO DRAIN DURING CLEAN UP OPERATIONS.
5. CONTRACTOR SHALL REMOVE & REPLANT EXISTING SHRUBBERY AS DIRECTED BY PROPERTY OWNER.
6. EXISTING CESSPOOL AT STA. 45+42 NOT TO BE REPLACED OR REPAIRED.
7. CONTRACTOR SHALL NOT REMOVE ANY GRAVEL OR FILL MATERIAL FROM THE PROPERTY BETWEEN STA. 16+82.08 TO STA. 33+07.21. EXCESS EXCAVATED MATERIAL SHALL BE DISPOSED OF ON THE PROPERTY BY SPREADING & COMPACTING WITH TWO COMPLETE PASSES BY HAULING EQUIPMENT.

THE MUNICIPALITY OF METROPOLITAN SEATTLE DOES NOT WARRANT OR GUARANTEE THE ACCURACY OR COMPLETENESS OF THE DATA SHOWN HEREON

THIS DRAWING REDUCED TO HALF SIZE

DESIGNED RFS DRAWN DLO CHECKED RFS	METROPOLITAN ENGINEERS BROWN AND CALDWELL — CAREY AND KRAMER HILL AND INGMAN — R W BECK AND ASSOCIATES	MUNICIPALITY OF METROPOLITAN SEATTLE SUBMITTED Ray F. Duffield, Design Engineer - Metropolitan Engineers; RECOMMENDED Ray F. Duffield, Project Engineer - Metropolitan Engineers; APPROVED Chief Engineer - Metropolitan Engineers; APPROVED For Metropolitan Engineers; APPROVED Charles O. Gill, For Municipality of Metropolitan Seattle	SCALE AS NOTED	FILE R202R DATE JULY 1969	RENTON SYSTEM	REDMOND INTERCEPTOR SECTION 1B STA. 16+82.08 TO STA. 40+00	DRAWING NUMBER 6 SHEET NUMBER 6 OF 7

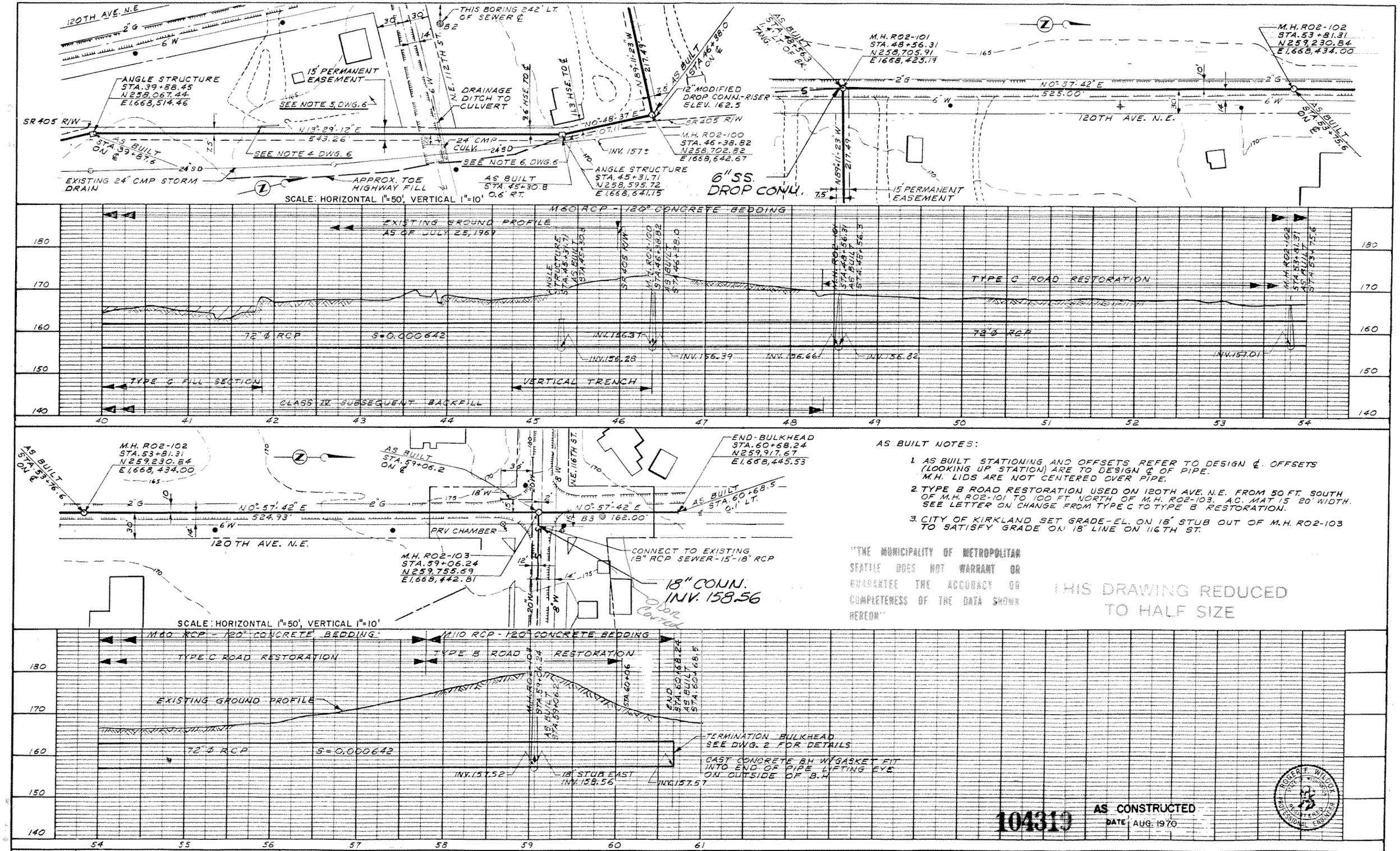

AS BUILT NOTES:

1. AS BUILT STATIONING AND OFFSETS REFER TO DESIGN ℄. OFFSETS (LOOKING UP STATION) ARE TO DESIGN ℄ OF PIPE. M.H. LIDS ARE NOT CENTERED OVER PIPE.
2. TYPE B ROAD RESTORATION USED ON 120TH AVE. N.E. FROM 50 FT. SOUTH OF M.H. R02-101 TO 100 FT. NORTH OF M.H. R02-103. A.C. MAT 15' 20' WIDTH. SEE LETTER ON CHANGE FROM TYPE C TO TYPE B RESTORATION.
3. CITY OF KIRKLAND SET GRADE-EL. ON 18" STUB OUT OF M.H. R02-103 TO SATISFY GRADE ON 18" LINE ON 116TH ST.

"THE MUNICIPALITY OF METROPOLITAN SEATTLE DOES NOT WARRANT OR GUARANTEE THE ACCURACY OR COMPLETENESS OF THE DATA SHOWN HEREON"

THIS DRAWING REDUCED TO HALF SIZE

104319

AS CONSTRUCTED
DATE AUG. 1970

ROGER F. WILCOX — REGISTERED PROFESSIONAL ENGINEER

DESIGNED RFS DRAWN DLO CHECKED RFS	METROPOLITAN ENGINEERS BROWN AND CALDWELL — CAREY AND KRAMER HILL AND INGMAN — R.W. BECK AND ASSOCIATES	MUNICIPALITY OF METROPOLITAN SEATTLE SUBMITTED Design Engineer — RECOMMENDED Project Engineer — APPROVED Chief Engineer — APPROVED Manager — APPROVED For Municipality of Metropolitan Seattle	SCALE AS NOTED	FILE R202R DATE JULY 1969	RENTON SYSTEM	REDMOND INTERCEPTOR SECTION IB STA. 40+00 TO STA. 60+68.24 END	DRAWING NUMBER 7 SHEET NUMBER 7 OF 7

AERIAL PHOTOGRAPHY PERFORMED OCTOBER, 1987, AND DOES NOT REFLECT TOPOGRAPHY CHANGES SINCE THAT DATE.

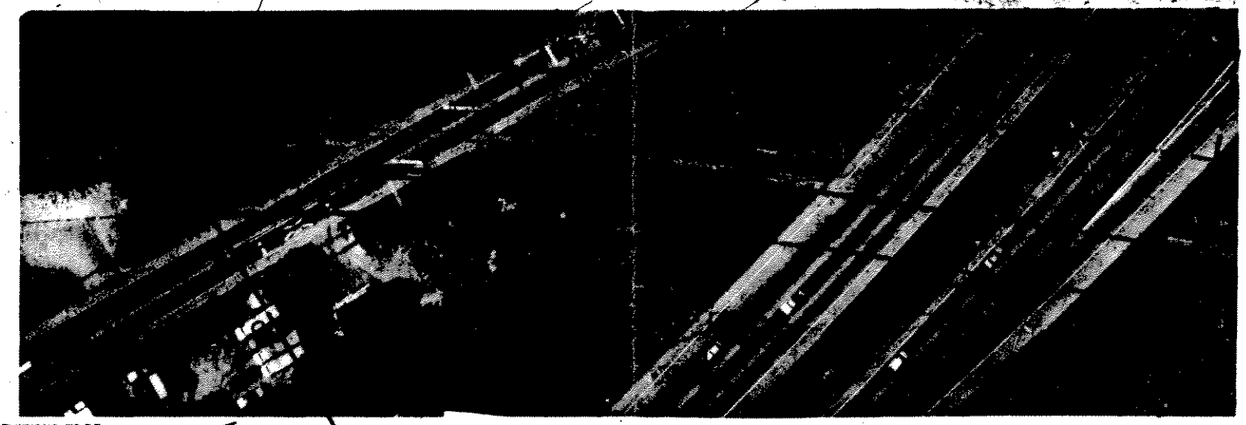

THIS PHOTO WAS NOT REPRINTED TO SCALE IS APPROXIMATE

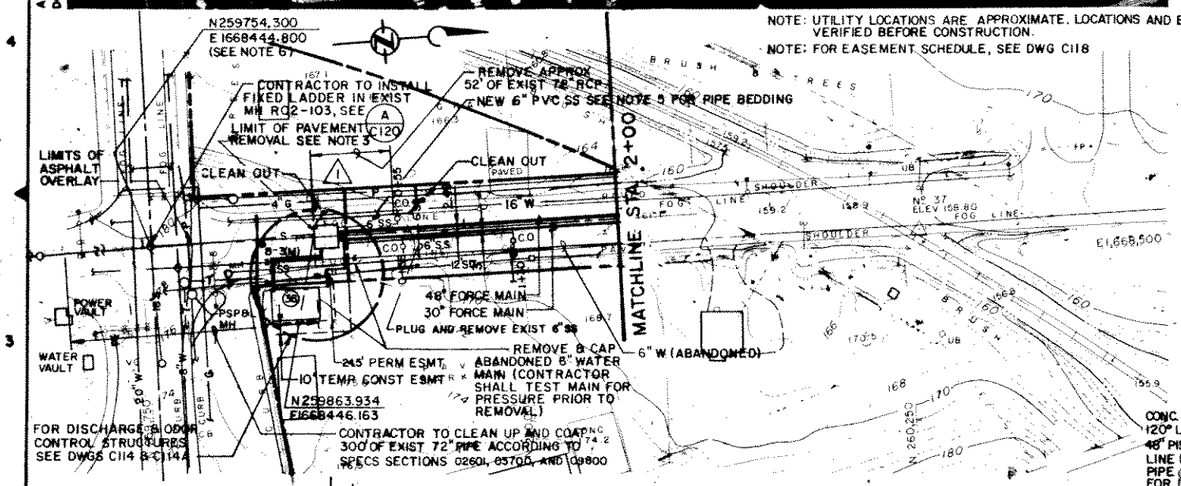

NOTE: UTILITY LOCATIONS ARE APPROXIMATE. LOCATIONS AND ELEVATIONS TO BE VERIFIED BEFORE CONSTRUCTION.

NOTE: FOR EASEMENT SCHEDULE, SEE DWG C118

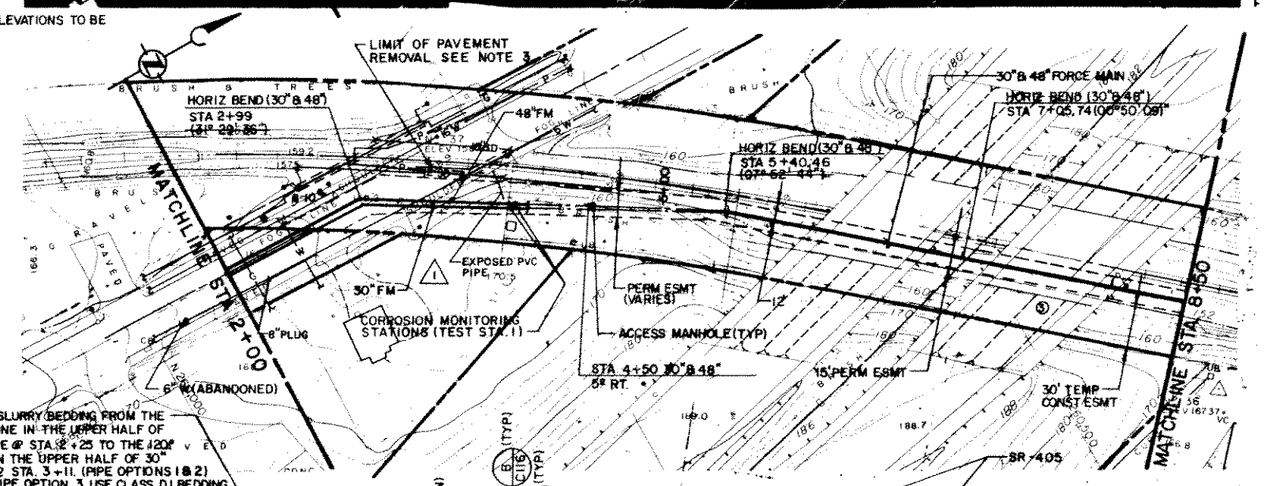

CONC. SLURRY BEDDING FROM THE 120° LINE IN THE UPPER HALF OF 48" PIPE @ STA. 2+25 TO THE 120° LINE IN THE UPPER HALF OF 30" PIPE @ STA. 3+11. (PIPE OPTIONS 1 & 2) FOR PIPE OPTION 3, USE CLASS D1 BEDDING FROM THE SPRING LINE OF 48" PIPE @ STA. 2+25 TO THE SPRINGLINE OF 30" PIPE @ 3+11.

NOTE: ALL HORIZ STA ARE ℄ OF 48" FORCE MAIN

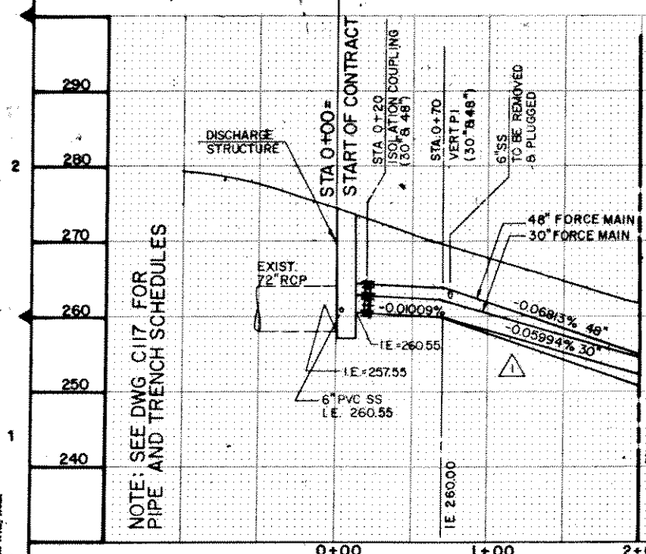

NOTES

1. FOR TRENCH SECTIONS BTWN STA 5+40.46 & STA. 9+00 SEE 2 C117
2. FOR X-SECTIONS BTWN STA 2+00 & STA 12+00, SEE DWGS C110 & C111.
3. CONTRACTOR SHALL REMOVE AND REPLACE PAVEMENT ON 120TH AVE N.E. @ TRENCH LOCATION FOR TYPICAL PAVEMENT X-SECTION SEE DETAIL 4/C120, REMAINING PAVEMENT @ 120TH AVE. N.E. OVERLAY W/ 2" ASPHALT PAVEMENT.
4. CONTRACTOR SHALL REMOVE AND REPLACE EXISTING TRAFFIC DETECTORS WITHIN THE CONSTRUCTION LIMITS AT THE INTERSECTION OF N.E. 116TH ST AND 120TH AVE N.E. TRAFFIC DETECTORS LOCATED WITHIN THE DISCHARGE STRUCTURE LIMITS SHALL BE RELOCATED FIVE (5) FEET SOUTH OF THE SOUTHERN EDGE OF THE DISCHARGE STRUCTURE OR AS DIRECTED BY THE ENGINEER.
5. BEDDING FOR 6" ∅ AND SMALLER PIPE SHALL BE CLASS D1, MIN 12" ALL AROUND.
6. EXISTING METRO MH RO2-103 AND 72" SEWER ARE SHOWN PER FIELD LOCATION BY BENCHMARK ASSOC. AND RECORD INFORMATION BY METRO. CONTRACTOR SHALL EXPOSE AND VERIFY LOCATION OF 72" SEWER AT DISCHARGE STRUCTURE.
7. CONTRACTOR SHALL REVIEW AND BECOME AWARE OF THE WSDOT PERMIT IN SPECIFICATIONS SECTION 01062.

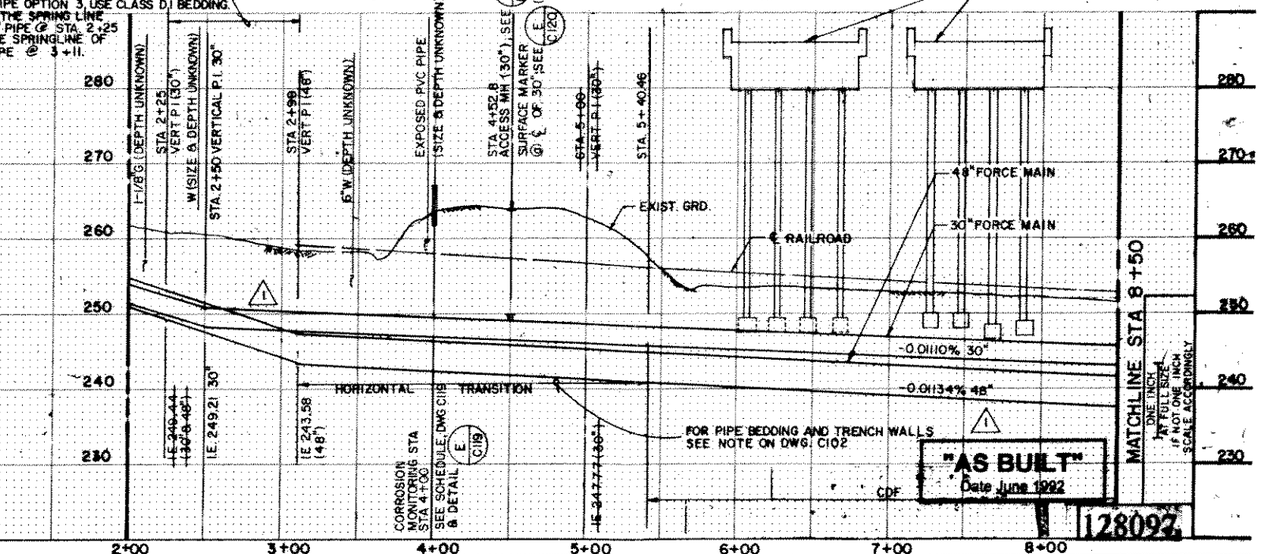

"AS BUILT"
Date June 1992

128092

NO.	REVISION	BY	DATE
1	ASBUILT	RK	6-92

HNTB
HOWARD NEEDLES TAMMEN & BERGENDOFF
• CENTRAC •
• CONVERSE CONSULTANTS NW • BENCHMARK ASSOCIATES INC •
• STREETER DERMANIS • OSBORN & RAY PLANNERS •
• LOUIS WARNER CO •

DATUM

ELEVATION 0 □, OR 100 ⊠, EQUALS MEAN SEA LEVEL, U.S.C.&G.S. 1929, (1947 ADJUSTMENT)

COORDINATES & BEARINGS ARE BASED ON WASHINGTON COORDINATE SYSTEM, NORTH ZONE.

DESIGNED: SNN
DRAWN: WP/JW
CHECKED: GAG
RECOMMENDED:
APPROVED:

SCALES: HORIZ. 1" = 50' VERT. 1" = 10'
CONTRACT NO. W/F 11-90

METRO Municipality of Metropolitan Seattle

YORK FORCE MAINS
PLAN & PROFILE
STA. 0+00 TO STA 8+50

DATE: OCT. 1990
FILE NO.
DWR NO.
DRAWING NUMBER: C101
SHEET 4 OF 34

PHOTOGRAMMETRY BY CROSSWINDS-GREEN EMPIRE, INC. Eugene, Oregon 503-343-3877

THE COMPLETE LINE/ 99187

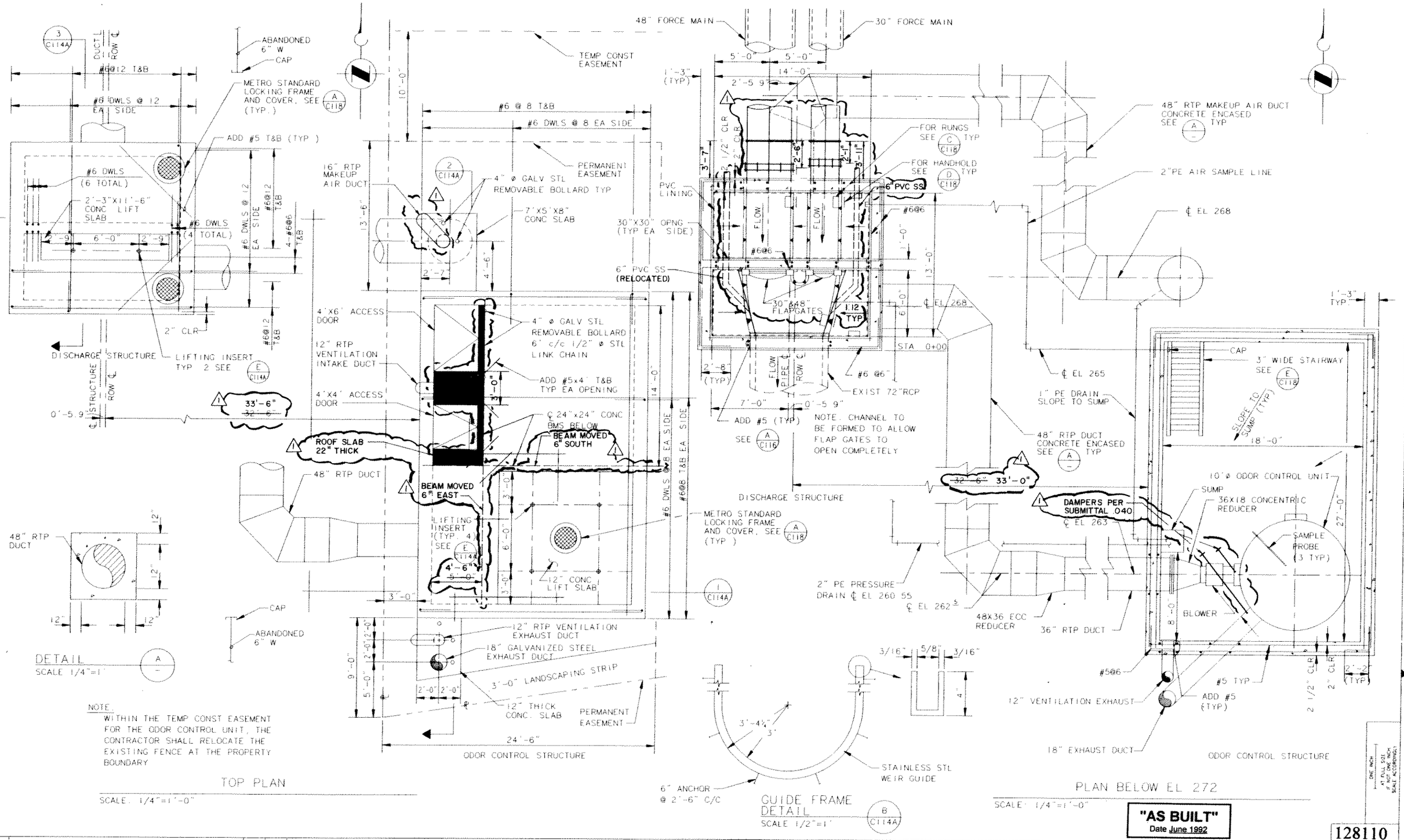

"AS BUILT"
Date June 1992

No	REVISION	BY	DATE
1	ASBUILT	RK	7-92

HNTB
HOWARD NEEDLES TAMMEN & BERGENDOFF
CENTRAC
CONVERSE CONSULTANTS NW · BENCHMARK ASSOCIATES INC
STREETER DERMANIS · OSBORN & RAY PLANNERS
LOUIS WARNER CO

DESIGNED: GAC
DRAWN: JED CHECKED: SNN
RECOMMENDED:
APPROVED:
SCALE: AS SHOWN
CONTRACT NO. W/F 11-90

METRO Municipality of Metropolitan Seattle

YORK FORCE MAINS
DISCHARGE & ODOR CONTROL STRUCTURES
SECTIONS & DETAILS

128110
DATE OCT 1990
FILE NO.
DRAWING NO. C114
SHEET NO. 17 OF 34

ONE INCH AT FULL SIZE IF NOT ONE INCH SCALE ACCORDINGLY

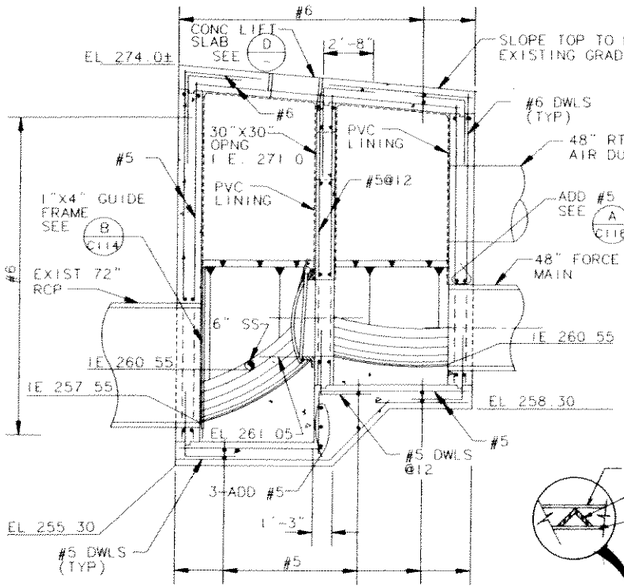

SECTION 3 C114
SCALE 1/4"=1'

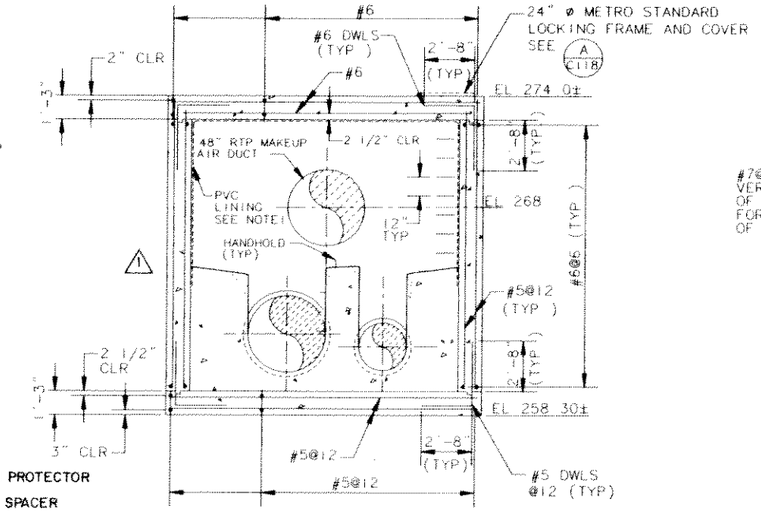

DISCHARGE STRUCTURE

NOTE 1 DISCHARGE STRUCTURE INTERIOR SURFACES SHALL BE LINED W/PVC LINING PER SPECIFICATIONS SECTION 09960

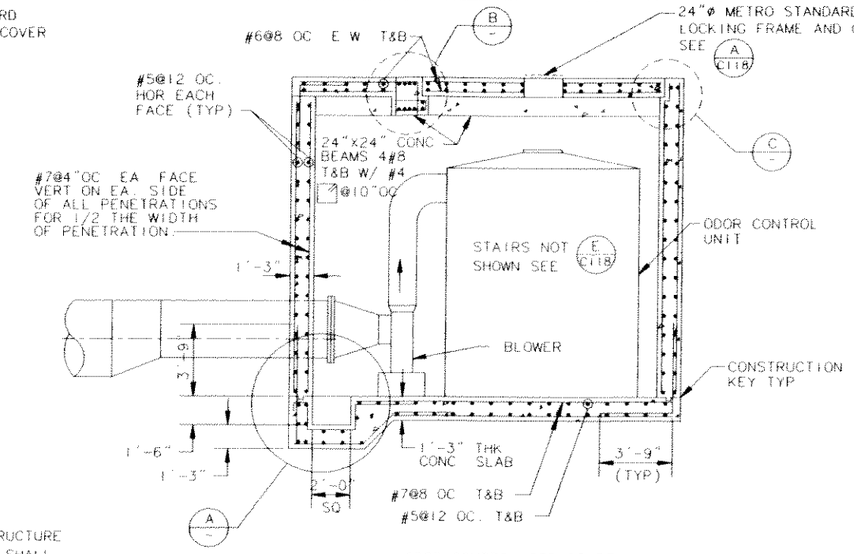

ODOR CONTROL STRUCTURE

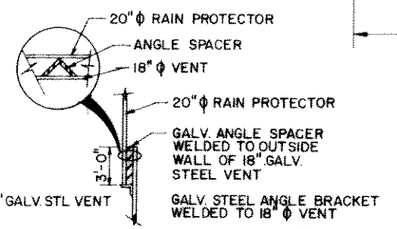

DETAIL F 1

SECTION 1 C114
SCALE 1/4"=1'

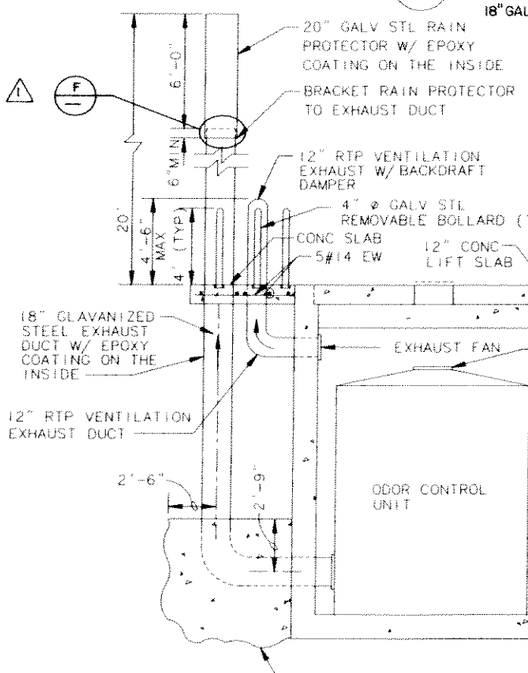

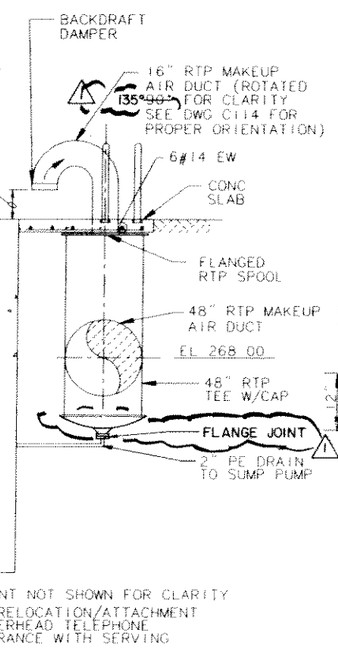

NOTE REINFORCEMENT NOT SHOWN FOR CLARITY

NOTE COORDINATE RELOCATION/ATTACHMENT OF EXIST OVERHEAD TELEPHONE SERVICE ENTRANCE WITH SERVING UTILITY.

SECTION 2 C114
SCALE 1/4"=1'

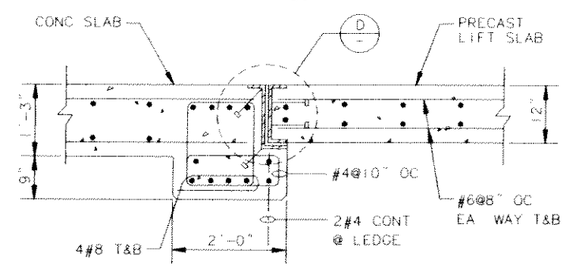

DETAIL B
SCALE 3/4"=1'

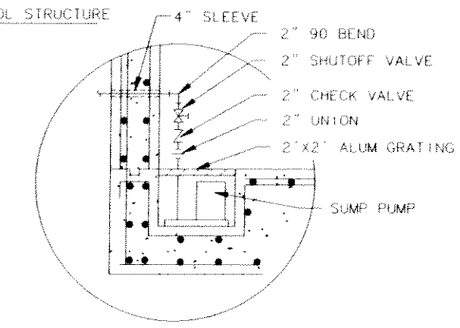

DETAIL A
SCALE 1/2"=1'

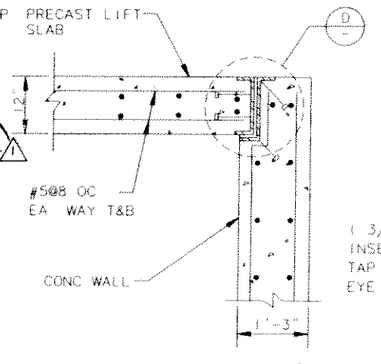

DETAIL C
SCALE 3/4"=1'

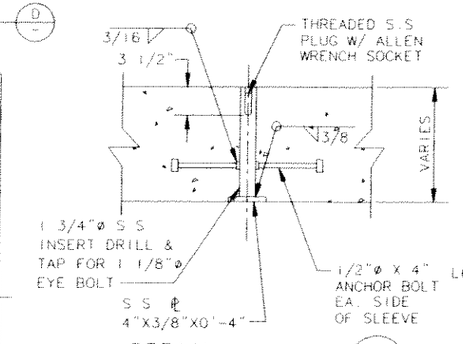

DETAIL E C114
SCALE 1 1/2"=1'

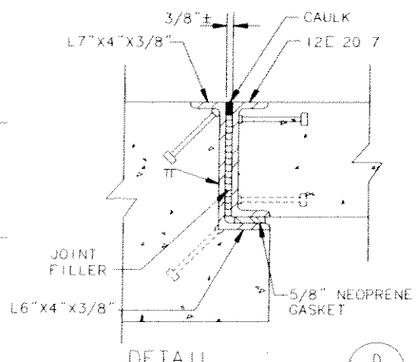

DETAIL D
SCALE 1 1/2"=1'

ONE INCH — AT FULL SIZE, IF NOT ONE INCH SCALE ACCORDINGLY

"AS BUILT"
Date June 1992

No	REVISION	BY	DATE
1	ASBUILT	RK	7-92

HNTB
HOWARD NEEDLES TAMMEN & BERGENDOFF
◇CENTRAC◇
◇ CONVERSE CONSULTANTS NW ◇ BENCHMARK ASSOCIATES INC ◇
◇ STREETER DERMANIS ◇ OSBORN & RAY PLANNERS ◇
◇ LOUIS WARNER CO ◇

DESIGNED: CAC
DRAWN: JED CHECKED: SNN
RECOMMENDED:
APPROVED:
SCALE: AS SHOWN
CONTRACT NO: W/F 11-90

METRO Municipality of Metropolitan Seattle

YORK FORCE MAINS
DISCHARGE & ODOR CONTROL STRUCTURES
SECTIONS & DETAILS

128111
DATE: OCT 1990
FILE NO.
DRAWING NO: C114A
SHEET NO: 18 OF 34

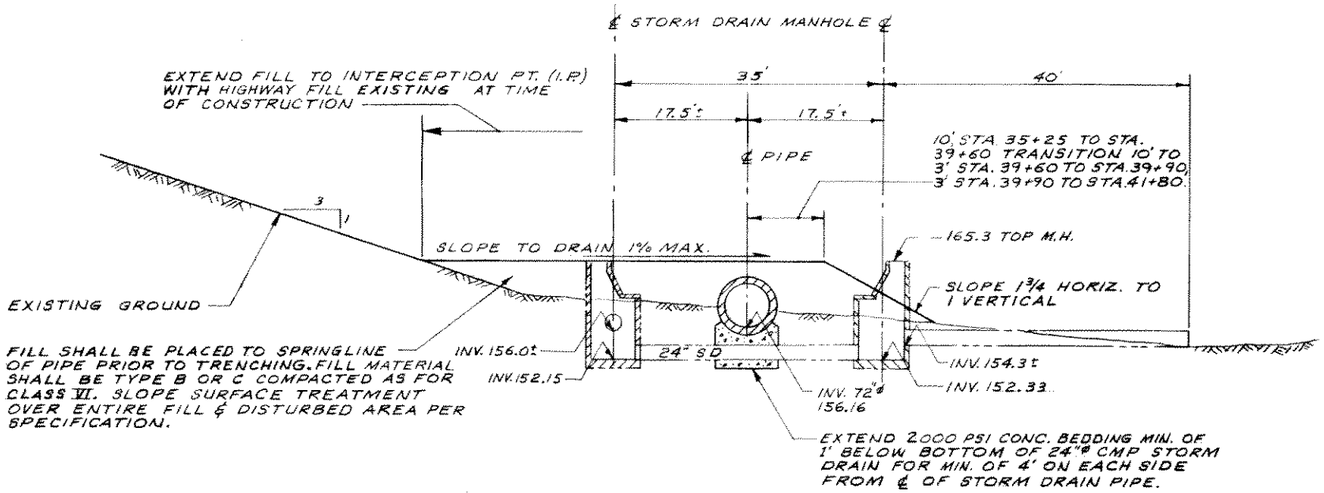

SECTION - STORM DRAIN SIPHON STRUCTURE
TYPE C FILL SECTION

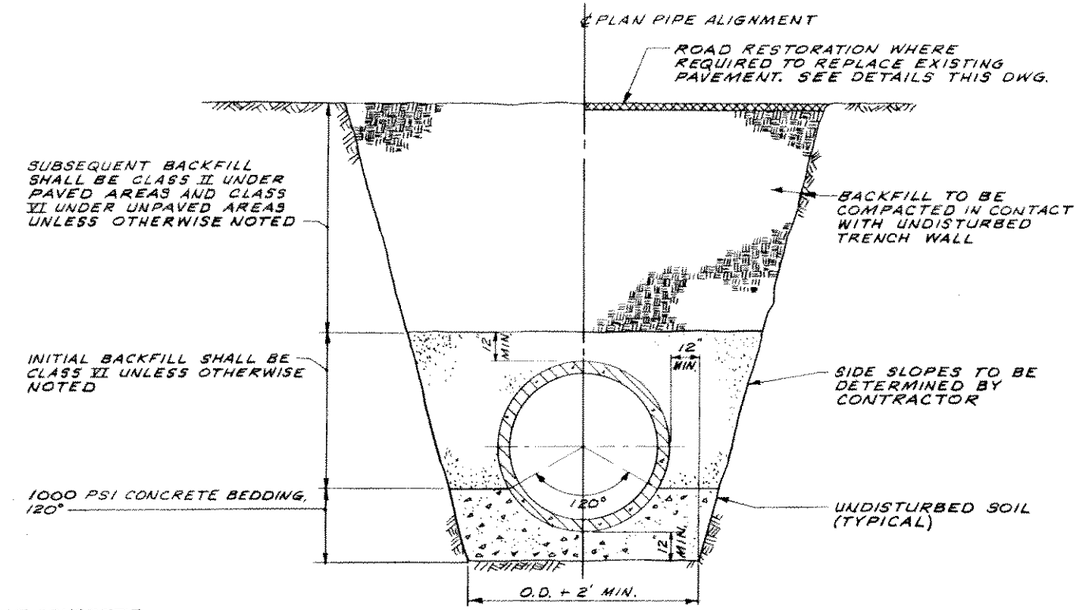

TYPICAL TRENCH SECTION 72" Ø R.C.P.
120° BEDDING DETAIL

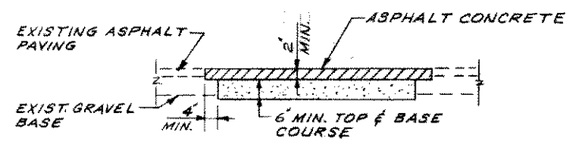

TYPE B ROAD RESTORATION

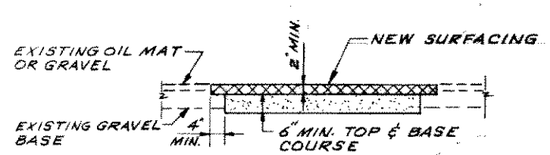

TYPE C ROAD RESTORATION

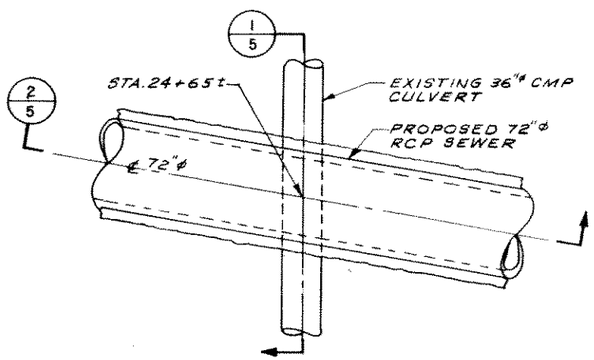

PLAN

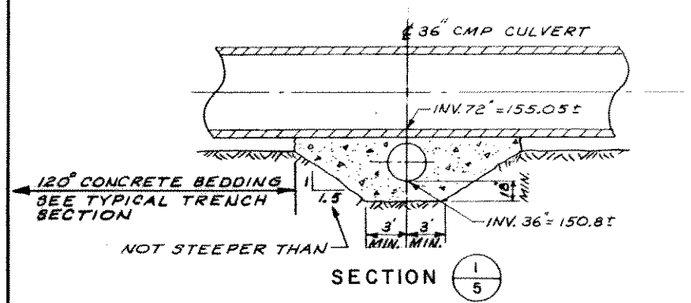

SECTION 1/5

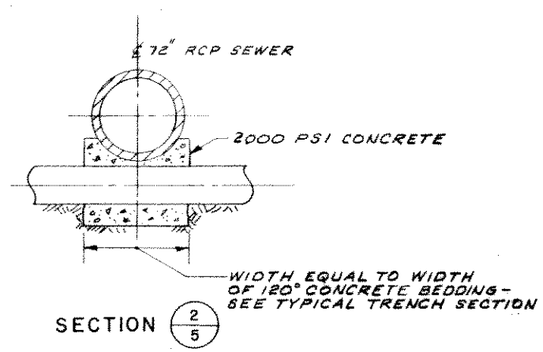

SECTION 2/5

DETAIL - CULVERT CROSSING

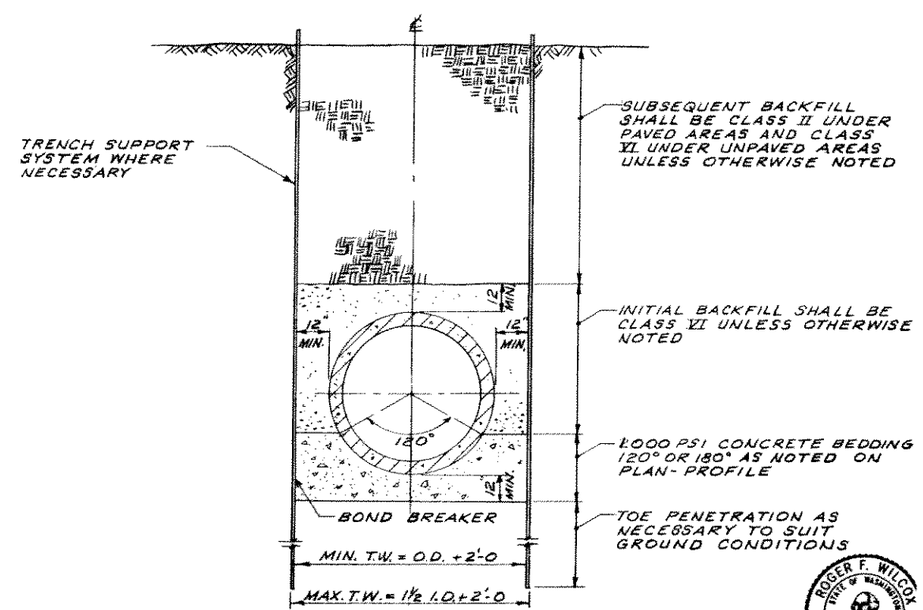

TYPICAL VERTICAL TRENCH SECTION - 72" Ø R.C.P.

ROGER F. WILCOX
STATE OF WASHINGTON
REGISTERED PROFESSIONAL ENGINEER

AS CONSTRUCTED 104317
DATE AUG. 1970

DESIGNED RFS DRAWN DLO CHECKED RFS	METROPOLITAN ENGINEERS BROWN AND CALDWELL CAREY AND KRAMER HILL AND INGMAN R.W. BECK AND ASSOCIATES	MUNICIPALITY OF METROPOLITAN SEATTLE SUBMITTED Design Engineer - Metropolitan Engineers; RECOMMENDED Project Engineer - Metropolitan Engineers; APPROVED Chief Engineer - Metropolitan Engineers; APPROVED For Metropolitan Engineers; APPROVED For Municipality of Metropolitan Seattle	SCALE NO SCALE	FILE R202R DATE JULY 1969	RENTON SYSTEM	REDMOND INTERCEPTOR SECTION 1B TYPICAL SECTION & DETAILS	DRAWING NUMBER C 5 SHEET NUMBER 5 OF 7