INTERSTATE 405 Corridor Program
Congestion Relief & Bus Rapid Transit Projects

APPENDIX T5

Northwest Region Illumination and Signal Details

I-405, SR520 to SR522 Stage 1 (Kirkland Stage 1)

Request For Proposal
July 15, 2005

Washington State Department of Transportation

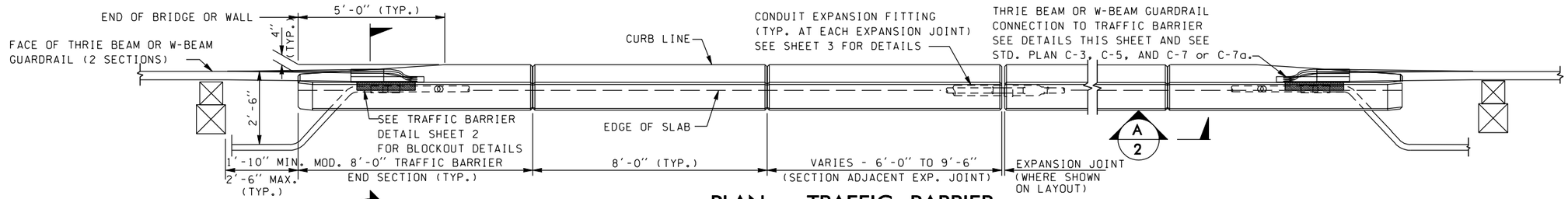

PLAN – TRAFFIC BARRIER

BARRIER CONTINUOUS BETWEEN ROADWAY EXPANSION JOINTS.
CONSTRUCTION JOINTS WITH SHEAR KEYS ARE PERMISSIBLE AT DUMMY JOINT LOCATIONS.
FORM JOINTS BETWEEN DUMMY JOINTS SHALL NOT BE PERMITTED.

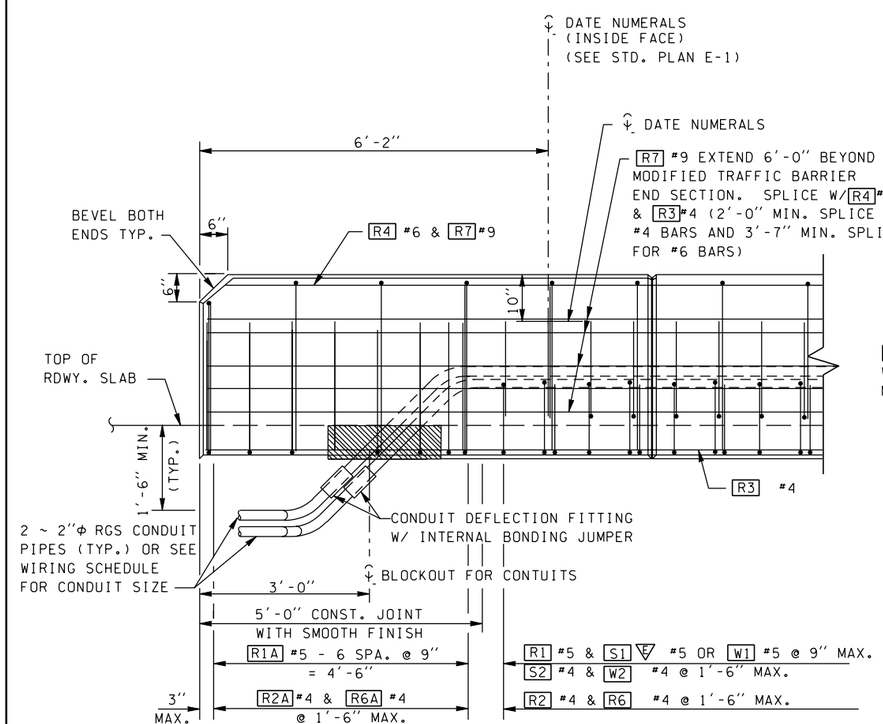

OUTSIDE ELEVATION END OF MODIFIED TRAFFIC BARRIER

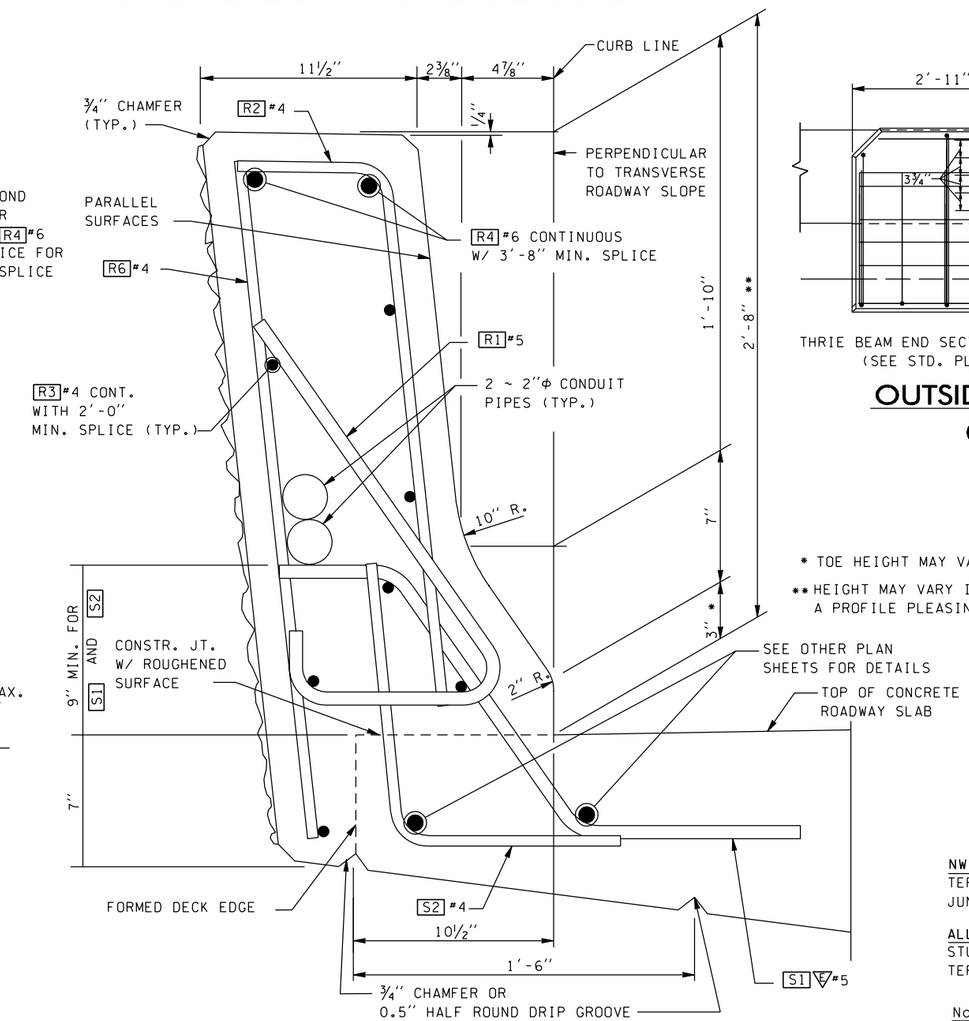

* TOE HEIGHT MAY VARY, 2" MIN. TO 6" MAX.
** HEIGHT MAY VARY IF REQUIRED TO PROVIDE A PROFILE PLEASING TO THE EYE

TYPICAL SECTION – TRAFFIC BARRIER

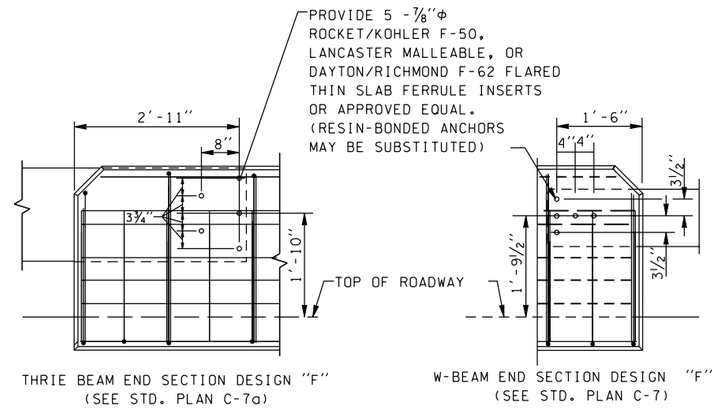

THRIE BEAM END SECTION DESIGN "F" (SEE STD. PLAN C-7a)

W-BEAM END SECTION DESIGN "F" (SEE STD. PLAN C-7)

OUTSIDE ELEVATION TRAFFIC BARRIER GUARDRAIL CONNECTION

(WHERE SHOWN ON LAYOUT)

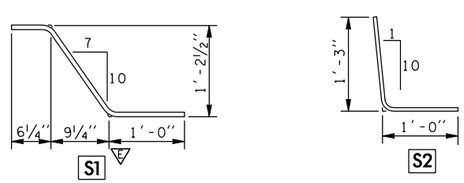

NW REGION:
TERMINATE EACH CONDUIT PIPE AT SEPARATE TYPE 1 JUNCTION BOXES OFF END OF BRIDGE AS SHOWN ON LAYOUT.

ALL OTHER REGIONS:
STUB OUT & CAP 3'-4" FROM END OF BRIDGE BARRIER, EXCEPT TERMINATE IN JUNCTION BOX WHERE AND WHEN SHOWN ON LAYOUT.

Note to Designer: The non-applicable text should be removed from the actual bridge plans.

	DATE	DATE	REVISION	BY
DESIGNED BY				
ENTERED BY J. HARVEY				
CHECKED BY				
PROJ. ENGR.				
REGIONAL ADM.		4-4-01	NEW BARRIER SHEET	JH

REGION NO.	STATE	FED.AID PROJ.NO.
10	WASH	
JOB NUMBER		
CONTRACT NO.		

Washington State Department of Transportation

STANDARD TRAFFIC BARRIERS ENGLISH

TYPE F - TRAFFIC BARRIER DETAIL 1 OF 3

1.01E

SHEET 1 OF 3 SHEETS

s:\414126\Electrical\Web\dgn\barcondjb.dgn
PLOT1 06:50:54 AM 06/18/2002 MbuthN

PLOT2 s:\414126\Electrical\MASTER_FILES\DETAILS\barcondjb.dgn
08/13/2002 10:45:37 AM
MButhN

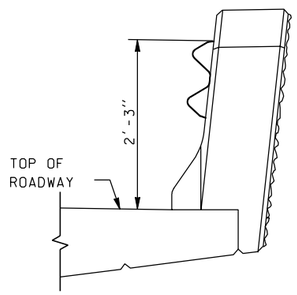

END VIEW

WBEAM SHOWN
WITH "D" CONNECTION

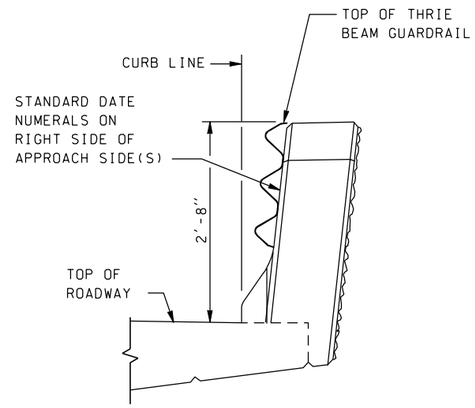

END VIEW

THRIE BEAM SHOWN
WITH "D" CONNECTION

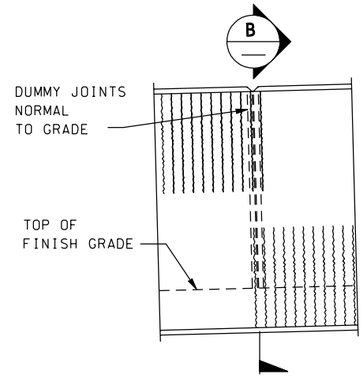

VIEW A/1

ALL CHAMFERS ¾"

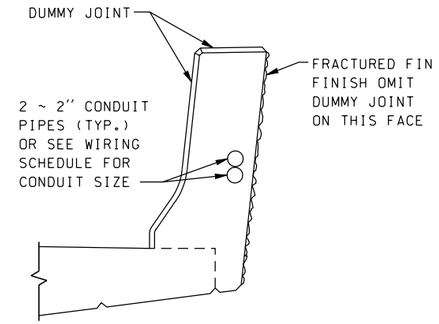

SECTION B

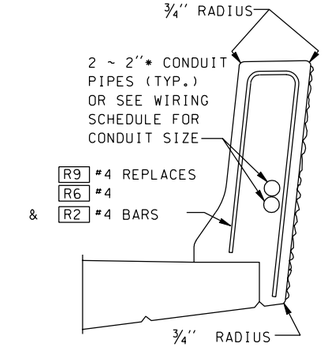

SLIPFORM ALTERNATE

SEE "TYPICAL SECTION - TRAFFIC BARRIER"
FOR ADDITIONAL DETAILS

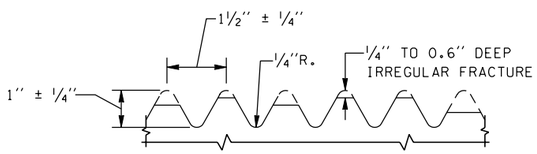

FRACTURED FIN FINISH

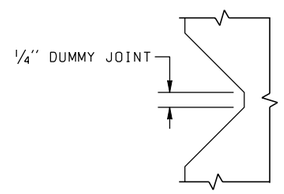

DUMMY JOINT DETAIL

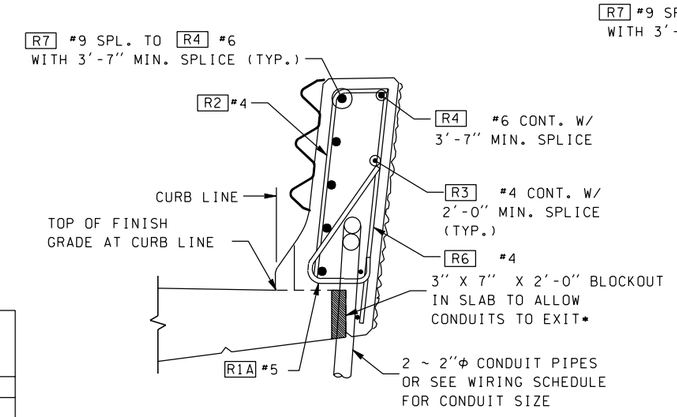

SECTION C/? BRIDGE

FOR DETAILS NOT SHOWN SEE "OUTSIDE ELEVATION"
AND "TYPICAL SECTION - TRAFFIC BARRIER"

* BLOCKOUT WIDTH MAY BE INCREASED TO 6" TO ALLOW CONDUITS OF A LARGER DIAMETER THAN 2" TO EXIT BARRIER OR WALL WITHOUT REBAR STEEL CONFLICT

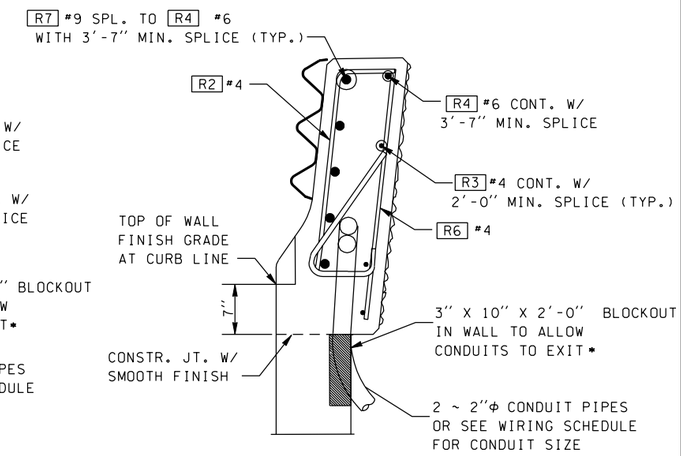

SECTION C/? WALL

DETAIL FOR RETAINING WALL OR
WINGWALL. FOR REINFORCING NOT
SHOWN SEE STD. PLAN D-1a & D-1b
OR WINGWALL PLAN. FOR DETAILS
NOT SHOWN SEE SECTION C/? BRIDGE

JUNCTION BOX LOCATIONS

STATION	OFFSET

TRAFFIC BARRIER BAR LIST

ALL REINFORCING SHALL BE AASHTO M31, GR. 60.

MARK	SIZE	LENGTH	BENDING DIAGRAM (ALL DIMENSIONS ARE OUT TO OUT)
R1	5	3'-8"	
R1A	5	(A)	
R2	4	2'-11"	
R2A	4	3'-5"	
R3	4	(A)	STR.
R4	6	(A)	STR.
R6	4	3'-0"	STR.
R7	9	14'-0"	STR.
R9	4	5'-11"	

(A) DETERMINE FROM PLANS

FOR W1 & W2 BARS SEE WINGWALL
OR RETAINING WALL PLANS.
FOR S1 & S2 BARS SEE BARLIST

≈ DIMENSIONS TO POINTS OF INTERSECTION

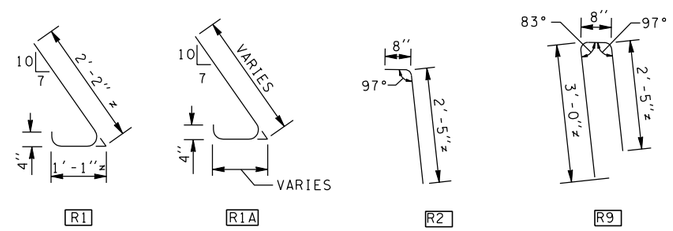

					REGION NO.	STATE	FED.AID PROJ.NO.
					10	WASH	
DESIGNED BY					JOB NUMBER		
ENTERED BY J. HARVEY							
CHECKED BY							
PROJ. ENGR.							
REGIONAL ADM.		4-4-01	NEW BARRIER SHEET	JH	CONTRACT NO.		
	DATE	DATE	REVISION	BY			

Washington State Department of Transportation

STANDARD
TRAFFIC BARRIERS
ENGLISH

TRAFFIC BARRIER- F-SHAPE
DETAIL 2 OF 3

1.02E

SHEET 2 OF 3 SHEETS

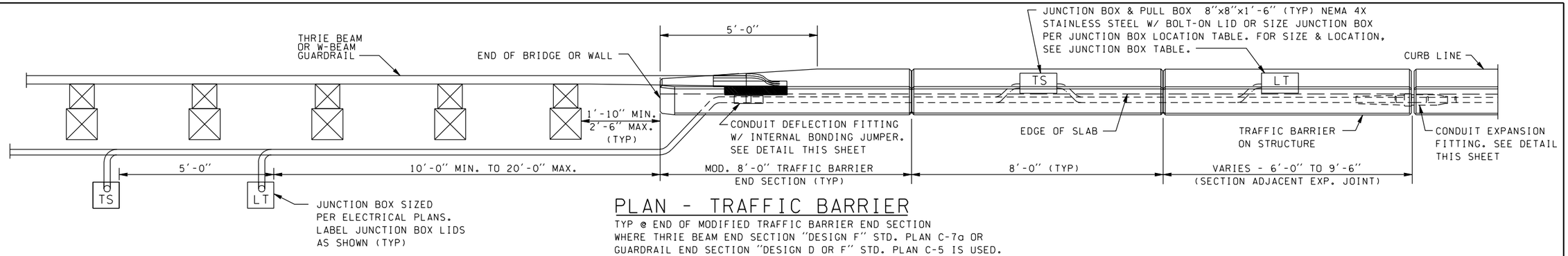

PLAN - TRAFFIC BARRIER

TYP @ END OF MODIFIED TRAFFIC BARRIER END SECTION WHERE THRIE BEAM END SECTION "DESIGN F" STD. PLAN C-7a OR GUARDRAIL END SECTION "DESIGN D OR F" STD. PLAN C-5 IS USED.

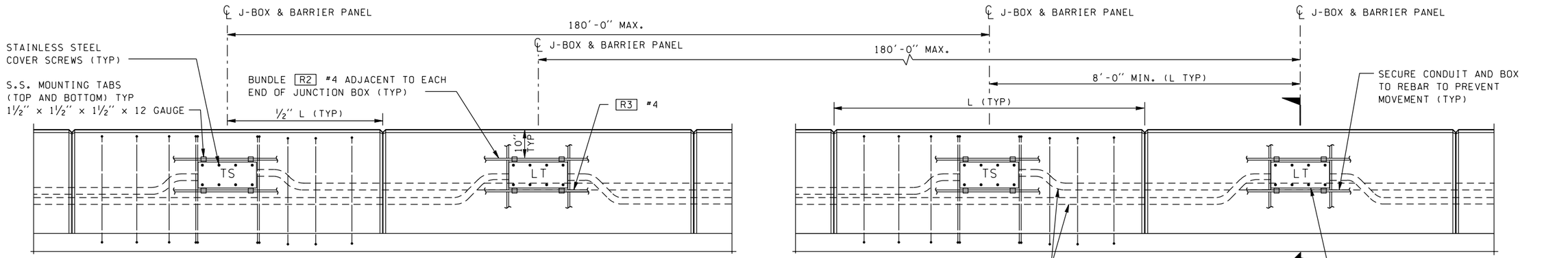

ELEVATION - CONDUITS & J-BOX IN TRAFFIC BARRIER

LABEL JUNCTION BOX COVER IN ACCORDANCE WITH STANDARD PLAN J-11a AND SPECIAL PROVISIONS. ADJACENT JUNCTION BOXES ARE SHOWN CENTERED BETWEEN ADJACENT DUMMY JOINTS. IF THE DISTANCE BETWEEN ADJACENT DUMMY JOINTS IS 16'-0" OR GREATER, PLACE ADJACENT BOXES SYMMETRICALLY ON EITHER SIDE OF THE CENTER OF ONE DUMMY PANEL WHILE MAINTAINING A 8'-0" MINIMUM BETWEEN CENTER LINES OF THE JUNCTION BOXES.

JUNCTION BOX LOCATIONS

STATION	OFFSET

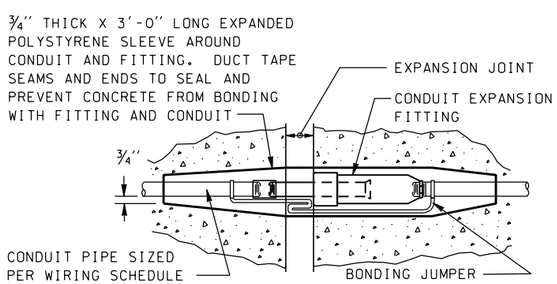

CONDUIT EXPANSION FITTING

CONDUIT FITTING- (TYPE AX FOR MOVEMENT OF ± 2") AT BRIDGE EXPANSION JOINTS

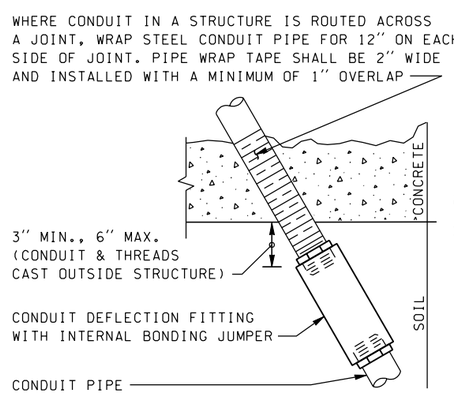

CONDUIT DEFLECTION FITTING A

CONDUIT FITTING- TYPE DX FOR DEFLECTION OF 30° AND ¾" MOVEMENT. PLACE AT CONDUIT PIPE EXIT FROM STRUCTURE

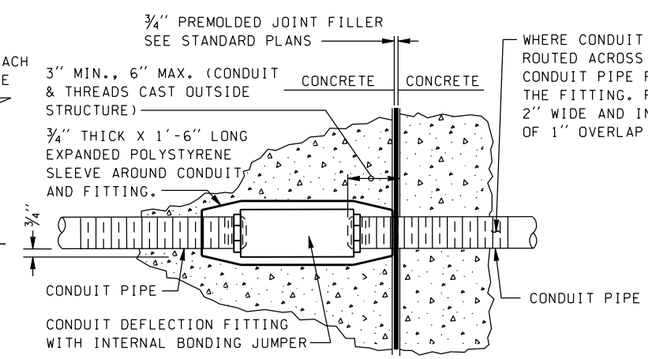

CONDUIT DEFLECTION FITTING B

CONDUIT FITTING- TYPE DX FOR DEFLECTION OF 30° AND ¾" MOVEMENT. CONDUIT PIPES PLACED THROUGH RETAINING WALL TRAFFIC BARRIER SHALL BE FITTED WITH DEFLECTION FITTINGS AT A MAXIMUM SPACING OF 120 FEET. THE DEFLECTION FITTINGS SHALL BE PLACED AT THE TRAFFIC BARRIER OPEN JOINT THAT COINCIDES WITH THE RETAINING WALL STEM EXPANSION JOINT NEAREST TO THE TRANSVERSE CONSTRUCTION JOINT IN THE WALL FOOTING.

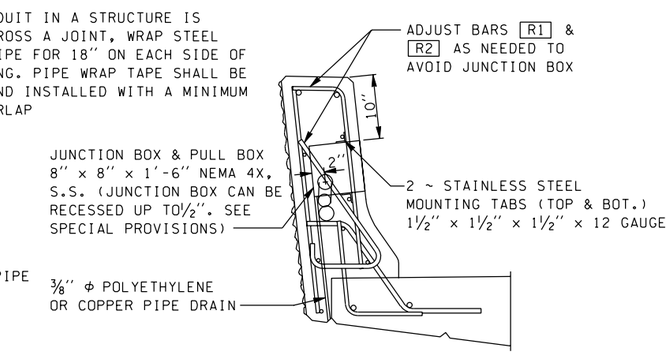

SECTION A

SECURE CONDUIT & JUNCTION BOX TO REBAR CAGE USING S.S. TABS TO PREVENT MOVEMENT

NOTE:
FOR JUNCTION BOX & PULL BOX SEE DETAIL SHEET
FLUSH MOUNT S-S J-BOX

	DATE	DATE	REVISION	BY
DESIGNED BY				
ENTERED BY J. HARVEY				
CHECKED BY				
PROJ. ENGR.		1-10-02	deflection fitting revision	JH
REGIONAL ADM.		4-4-01	NEW BARRIER SHEET	JH

REGION NO.	STATE	FED.AID PROJ.NO.
10	WASH	

JOB NUMBER

CONTRACT NO.

Washington State Department of Transportation

STANDARD TRAFFIC BARRIERS ENGLISH

TRAFFIC BARRIER- F SHAPE DETAIL 3 OF 3

1.03E

SHEET 3 OF 3 SHEETS

s:\414126\Electrical\Web\dgn\barcondjb.dgn
PLOT3 06:53:53 AM 06/18/2002 MDuthN

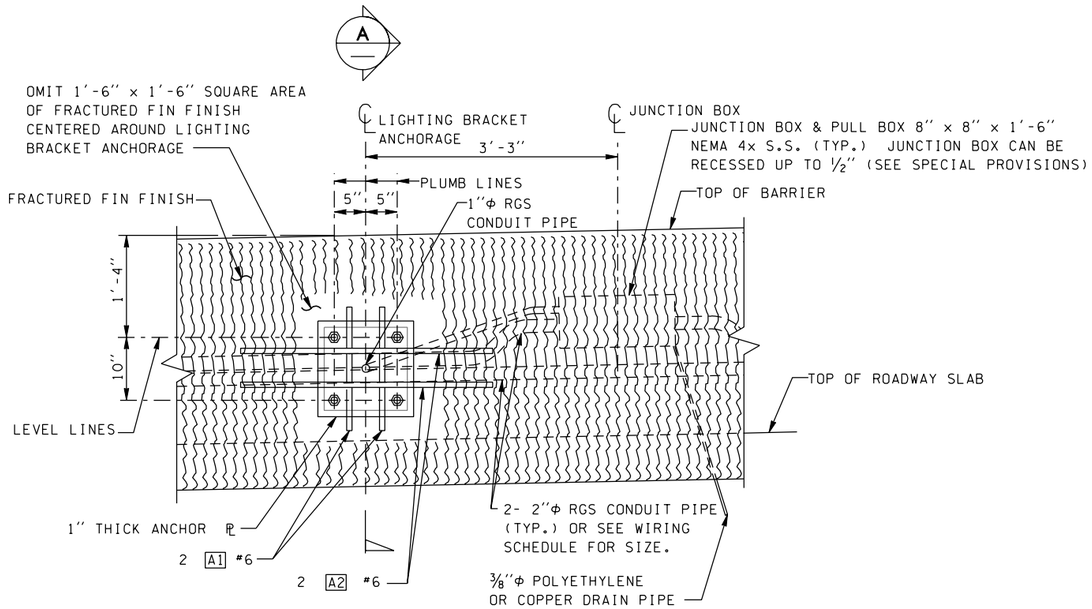

ELEVATION

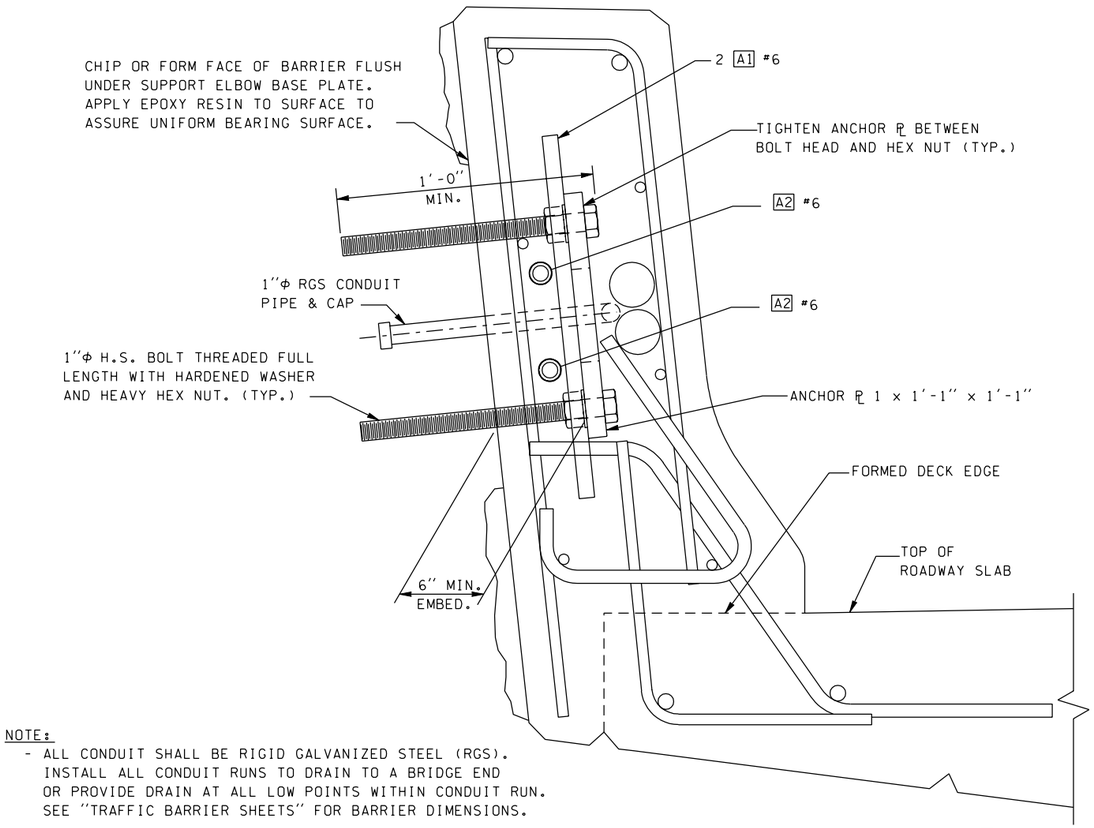

SECTION A

NOTE:

- ALL CONDUIT SHALL BE RIGID GALVANIZED STEEL (RGS). INSTALL ALL CONDUIT RUNS TO DRAIN TO A BRIDGE END OR PROVIDE DRAIN AT ALL LOW POINTS WITHIN CONDUIT RUN. SEE "TRAFFIC BARRIER SHEETS" FOR BARRIER DIMENSIONS.
- ALL HIGH STRENGTH (H.S.) BOLTS SHALL BE AASHTO M164. HARDENED WASHERS SHALL CONFORM TO ASTM F 436.

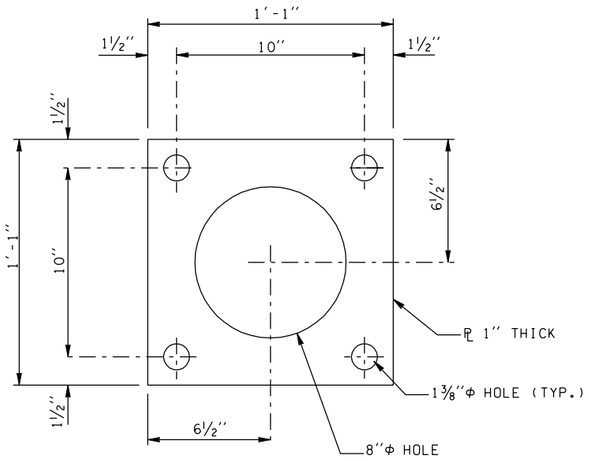

ANCHOR PLATE

GALVANIZE PER AASHTO M 111

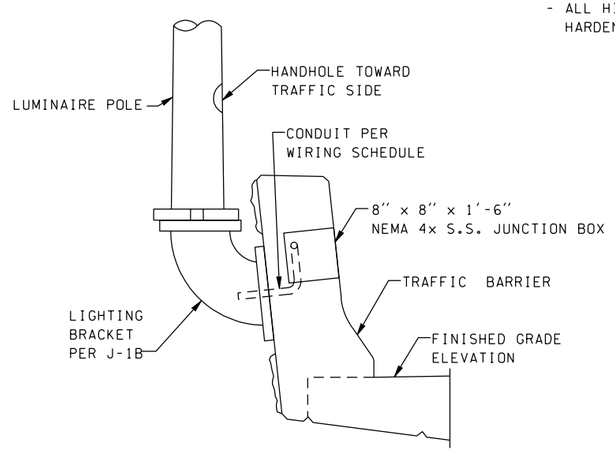

ELEVATION PROFILE LUMINAIRE SUPPORT

(SHOWN FOR BRIDGE, SIMILAR FOR WALLS)

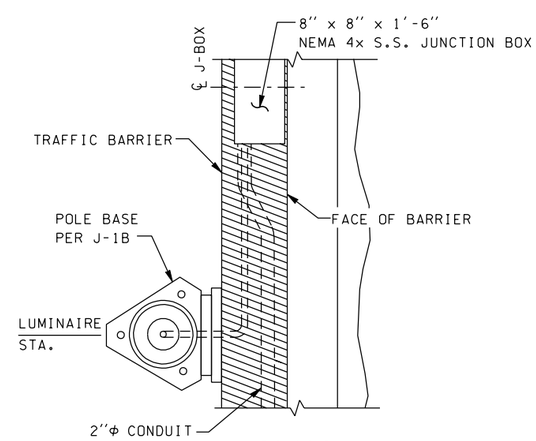

PLAN

LUMINAIRE POLE LOCATIONS ON BRIDGE & WALLS	
STATION	OFFSET
XXX 0+000.000	0.000 RT.
XXX 0+000.000	0.000 RT.

ANCHORAGE BARLIST			
ALL REINF. SHALL BE AASHTO M31, GRADE 60.			
MARK #	SIZE	LENGTH	BEND TYPE
A1	6	1'-9"	STRAIGHT
A2	6	5'-0"	STRAIGHT

					REGION NO.	STATE	FED.AID PROJ.NO.
					10	WASH	
DESIGNED BY					JOB NUMBER		
ENTERED BY							
CHECKED BY							
PROJ. ENGR.							
REGIONAL ADM.					CONTRACT NO.		
	DATE	DATE	REVISION	BY			

Washington State Department of Transportation

STANDARD TRAFFIC BARRIERS

LUMINAIRE BRACKET ANCHORAGE DETAILS ON F SHAPE TRAFFIC BARRIER

1.04E

SHEET OF SHEETS

s:\414126\Electrical\Web\dgn\barcondjb.dgn
PLOT4 06/18/2002 06:54:32 AM
MbuthN

PLOT1 06/18/2002 \414126\Electrical\Web\dgn\bar_tex_e.DGN MbuthN

DETAIL D

TRANSITIONAL SECTION CONCRETE BARRIER LIGHT STANDARD DETAIL

LUMINAIRE NO#	STATION
33A,33B	L 38+535

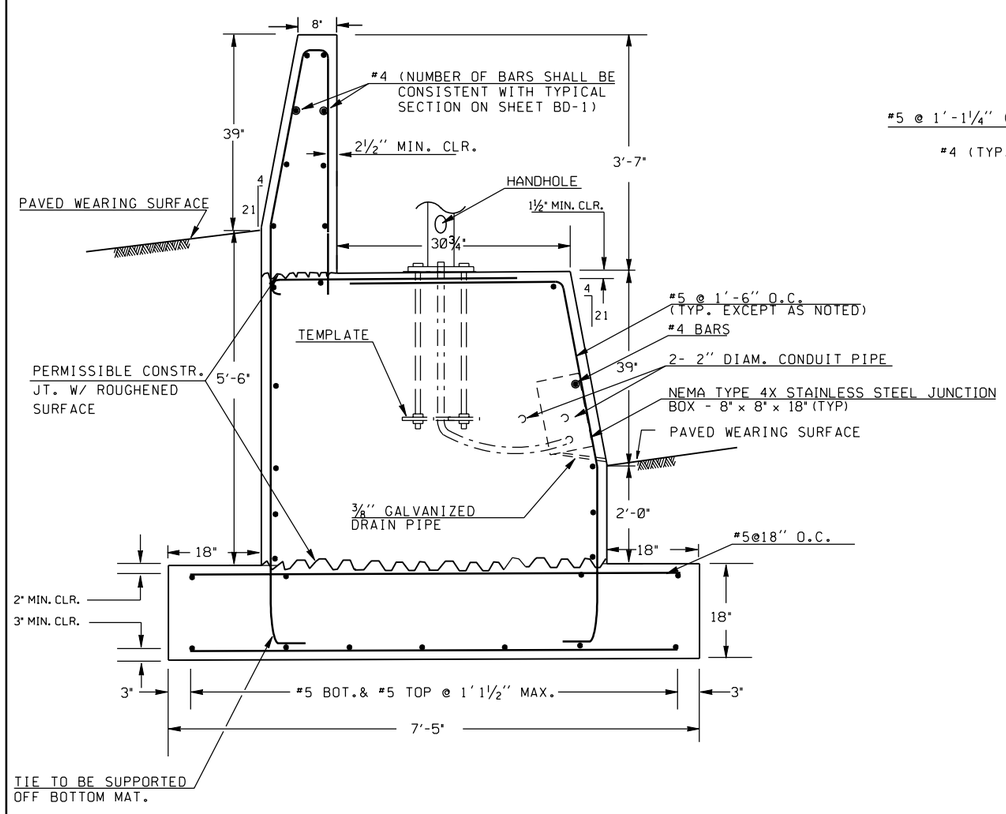

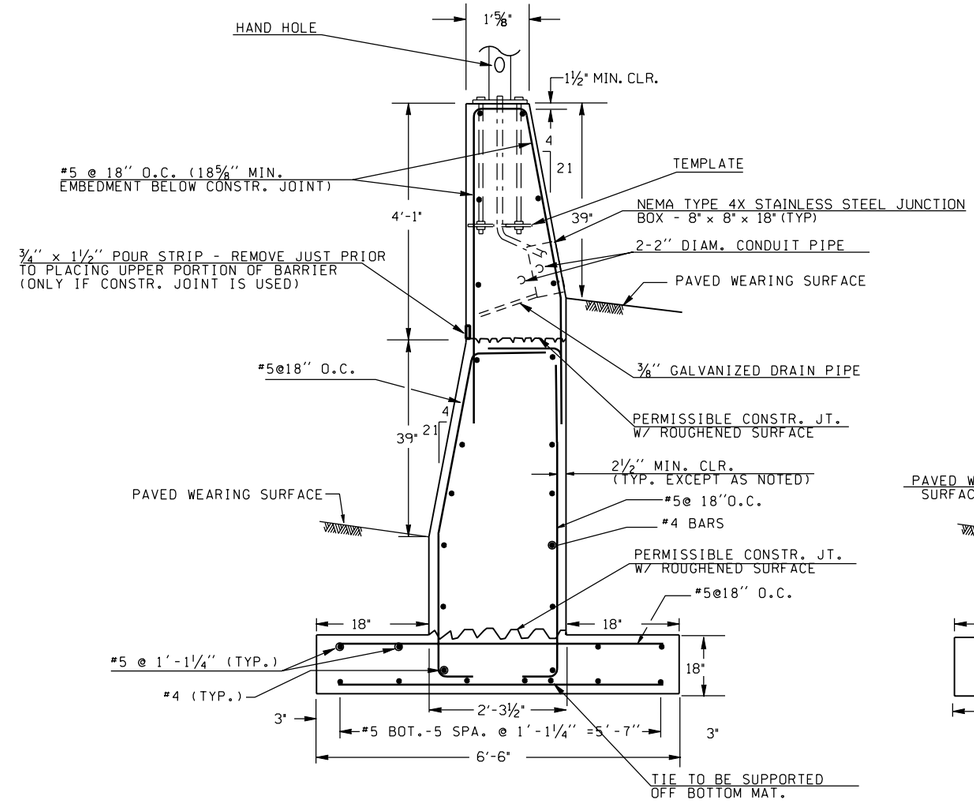

LUMINAIRE NO#	STATION
44A,44B	L 39+244

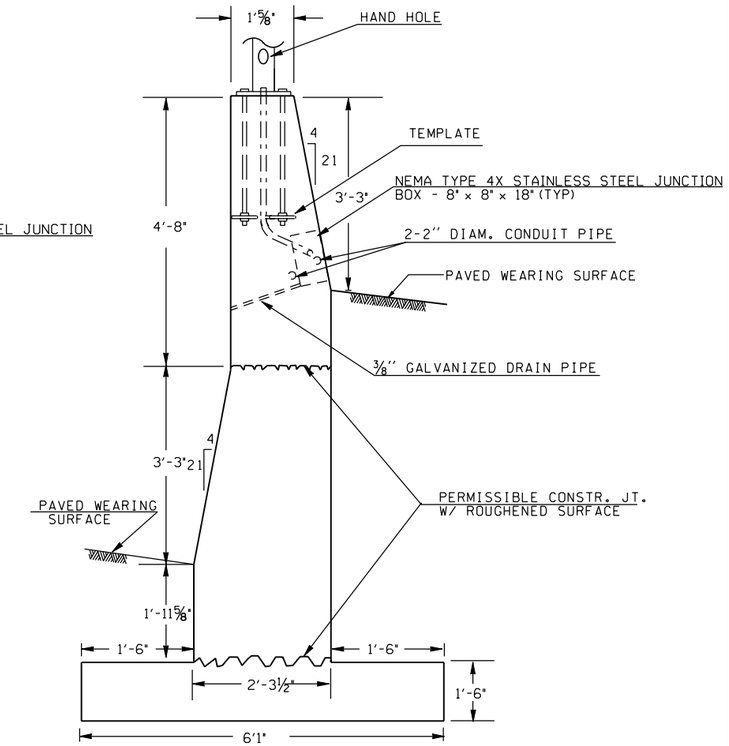

LUMINAIRE NO#	STATION
45A,45B	L 39+310

DETAIL E

ELEVATED SECTION CONCRETE BARRIER LIGHT STANDARD DETAIL

					REGION NO.	STATE	FED.AID PROJ.NO.
					10	WASH	
DESIGNED BY					JOB NUMBER		
ENTERED BY							
CHECKED BY							
PROJ. ENGR.		10-6-99	TEXT EDITS	JH	CONTRACT NO.		
REGIONAL ADM.		2-9-99	NEW ENGLISH SHEET	JH			
	DATE	DATE	REVISION	BY			

ENVIRONMENTAL AND ENGINEERING SERVICE CENTER

Washington State Department of Transportation

ENGLISH

ILLUMINATION DETAILS

1.10E

SHEET OF SHEETS

06/18/2002 \414126\Electrical\Web\dgn\bar_tex_e.DGN MbuthN

PLOT2

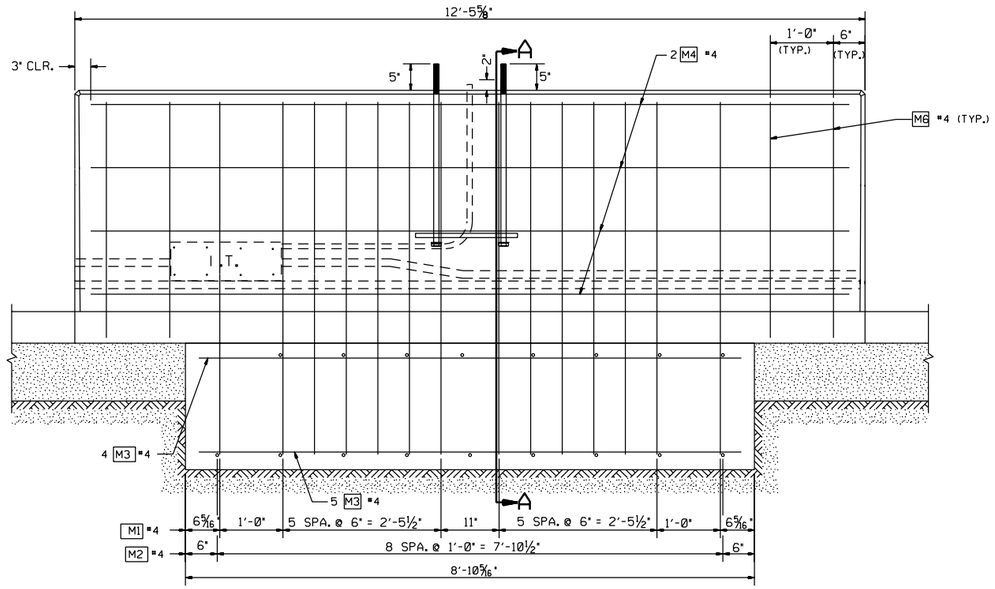

ELEVATION

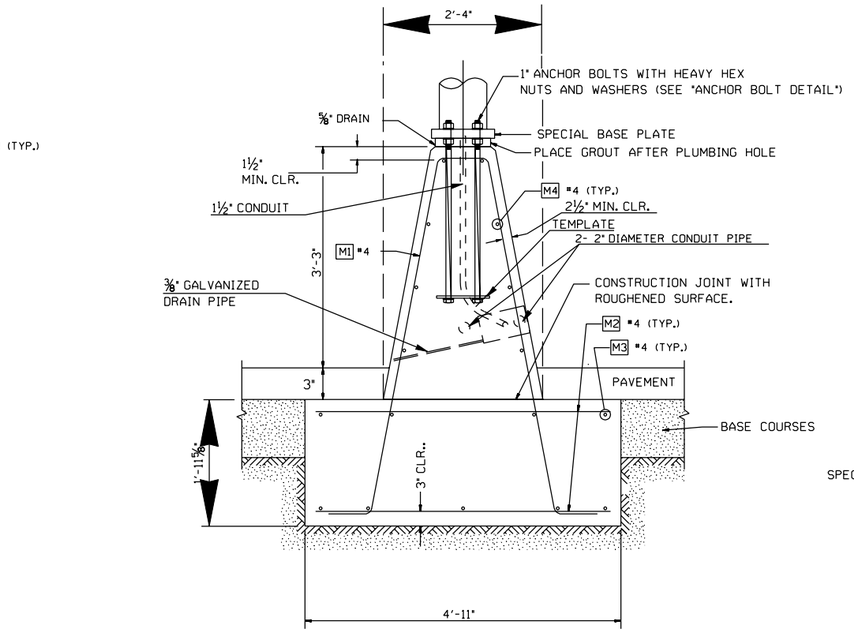

SECTION A-A

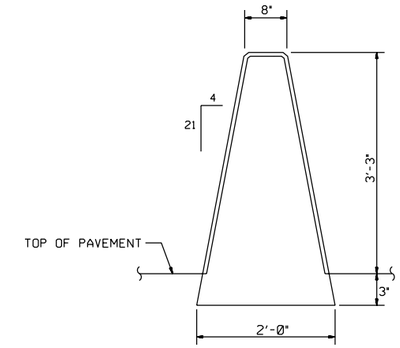

END VIEW

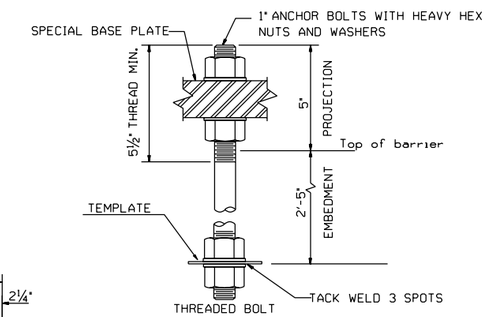

ANCHOR BOLT DETAIL

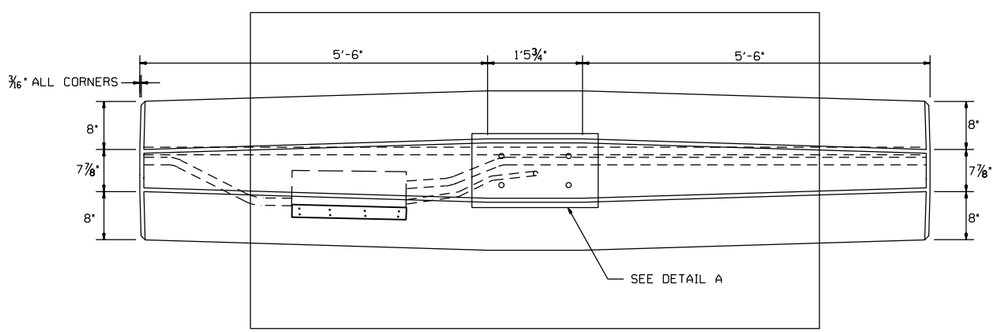

PLAN

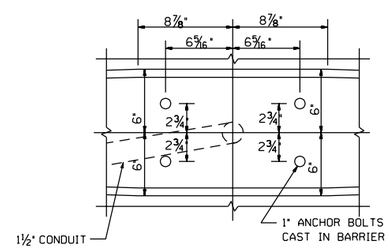

DETAIL A

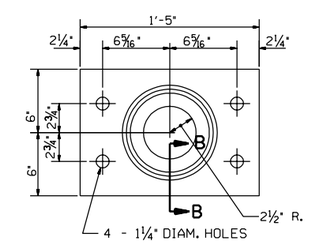

SPECIAL BASE PLATE

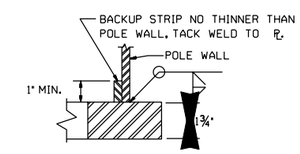

SECTION B-B

NOTE: ALL REINFORCEMENT LISTED BELOW IS PER INSTALLATION

BAR LIST — ALL DIMENSIONS ARE OUT TO OUT — ALL REINFORCEMENT SHALL CONFORM TO AASHTO M31 GR.60.

MARK	LOCATION	NO.	SIZE	A	B		D	LENGTH	BENDING DIAGRAM
M1	FOOTING-DOWEL	14	4	70 TO 170	1.580		150	3.710 TO 3.785	
M2	FOOTING	18	4		STRAIGHT			1.400	
M3	FOOTING	9	4		STRAIGHT			2.600	
M4	CONCRETE BARRIER	8	4	450	1.600			3.650	
M6	CONCRETE BARRIER	4	4	70 TO 95	985			2.130 to 2.155	

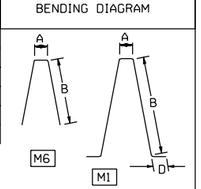

NOTES:

1 ANCHOR BOLTS SHALL BE ACCURATELY LOCATED AND SECURED IN PLACE WITH TEMPLATE PRIOR TO POURING CONCRETE.

2 ANCHOR BOLT MATERIALS: BOLT - ASTM A449; NUTS - ASTM A563; WASHERS - ASTM F436M. GALVANIZE PER ASTM A153.

3 THIS PLAN SHALL BE USED FOR 40' AND 50' LIGHT STANDARDS WITH 12' MAXIMUM LENGTH DOUBLE MAST ARMS.

4 REFER TO APPLICABLE STANDARDS PLANS FOR OTHER DETAILS ON LIGHT STANDARDS.

SINGLE SLOPE CAST IN PLACE CONCRETE BARRIER LIGHT STANDARD DETAIL

					REGION NO.	STATE	FED.AID PROJ.NO.
					10	WASH	
DESIGNED BY					JOB NUMBER		
ENTERED BY							
CHECKED BY							
PROJ. ENGR.					CONTRACT NO.		
REGIONAL ADM.		2-9-99	NEW ENGLISH SHEET	JH			
	DATE	DATE	REVISION	BY			

ENVIRONMENTAL AND ENGINEERING SERVICE CENTER

Washington State Department of Transportation

ENGLISH

BARRIER W / LT. STD. (SHEET 1 OF 2)

1.11E

SHEET OF SHEETS

06/18/2002\414126\Electrical\Web\dgn\bar_tex_e.DGN MbuthN
PLOT3

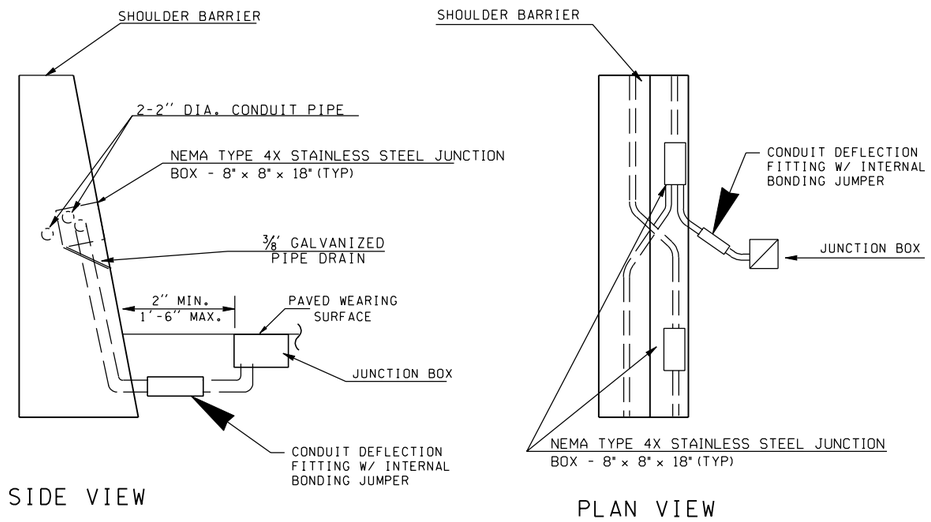

DETAIL C

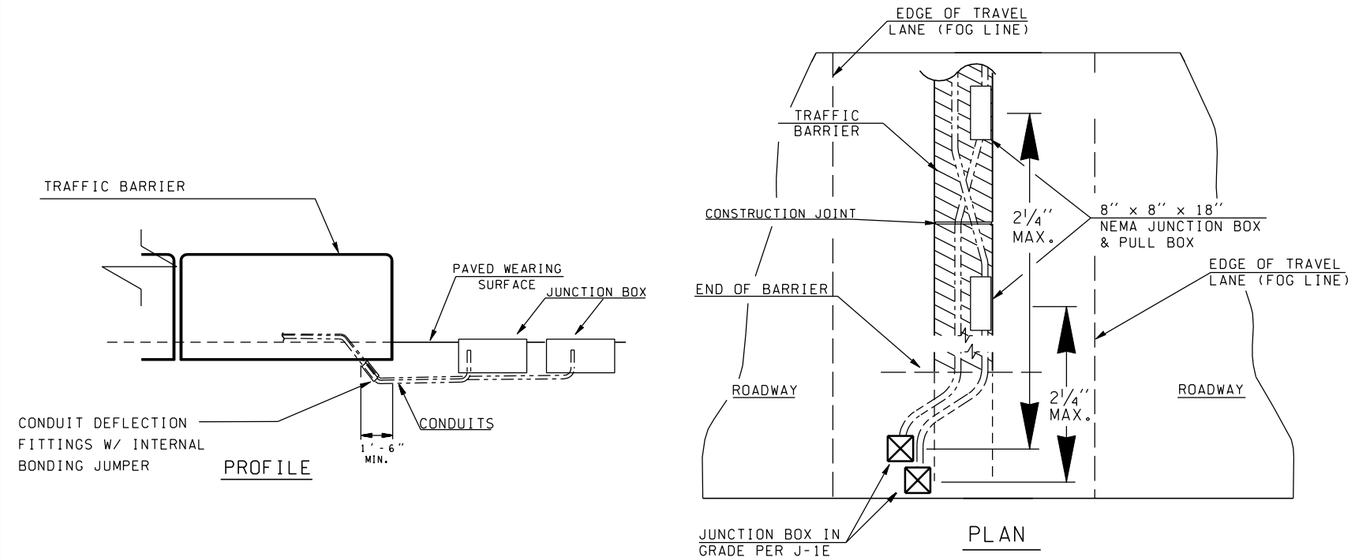

CONDUIT TRANSITION FROM BARRIER TO GRADE

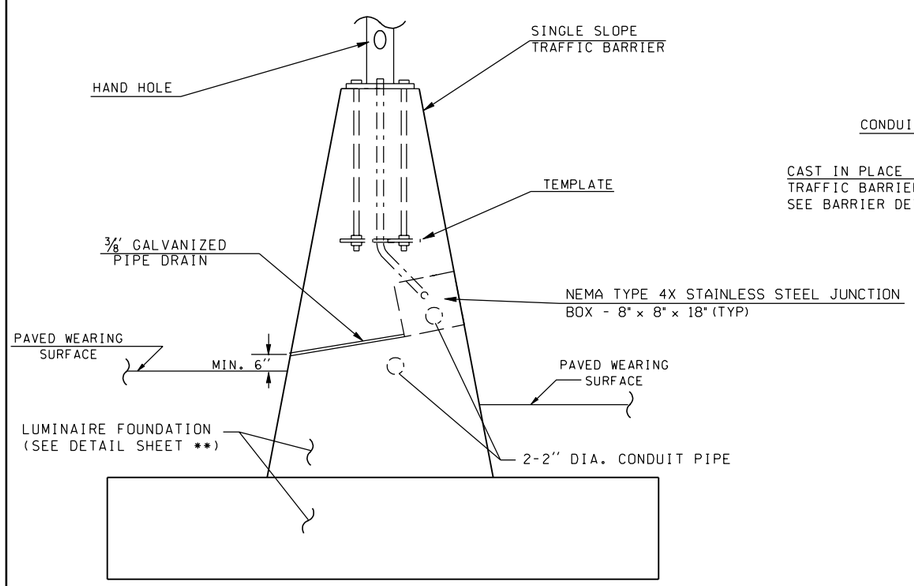

CAST IN PLACE CONC. BARRIER LIGHT STANDARD SECTION ANCHORAGE (TYPICAL)

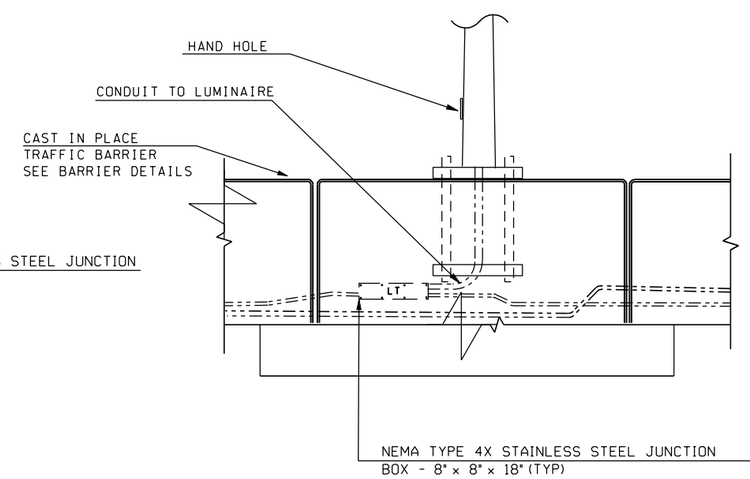

ELEVATION
TRAFFIC BARRIER WITH
CONDUIT AND JUNCTION BOX

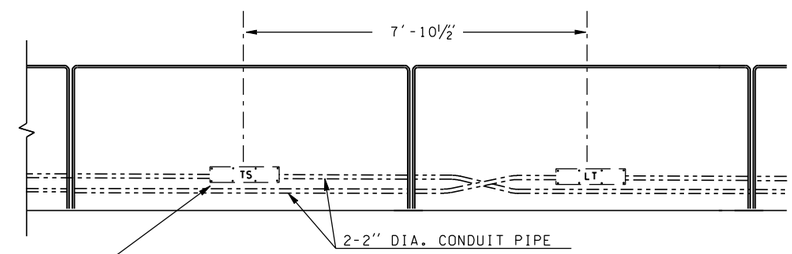

USE STAINLESS COVER SCREWS(TYP)

LABEL JUNCTION BOX LIDS AS SHOWN. SEE STANDARD PLAN J-11a FOR SIZING AND LETTERING.

ELEVATION CONDUIT AND
JUNCTION BOX IN TRAFFIC BARRIER

					REGION NO.	STATE	FED.AID PROJ.NO.
					10	WASH	
DESIGNED BY					JOB NUMBER		
ENTERED BY							
CHECKED BY							
PROJ. ENGR.		10-6-99	TEXT EDITS	JH	CONTRACT NO.		
REGIONAL ADM.		2-9-99	NEW ENGLISH SHEET	JH			
	DATE	DATE	REVISION	BY			

ENVIRONMENTAL AND ENGINEERING SERVICE CENTER

Washington State Department of Transportation

ENGLISH

BARRIER W / LT. STD. (SHEET 2 OF 2)

1.12E

SHEET OF SHEETS

PLOT4 06/18/2002 \414126\Electrical\Web\dgn\bar_tex_e.DGN MbuthN

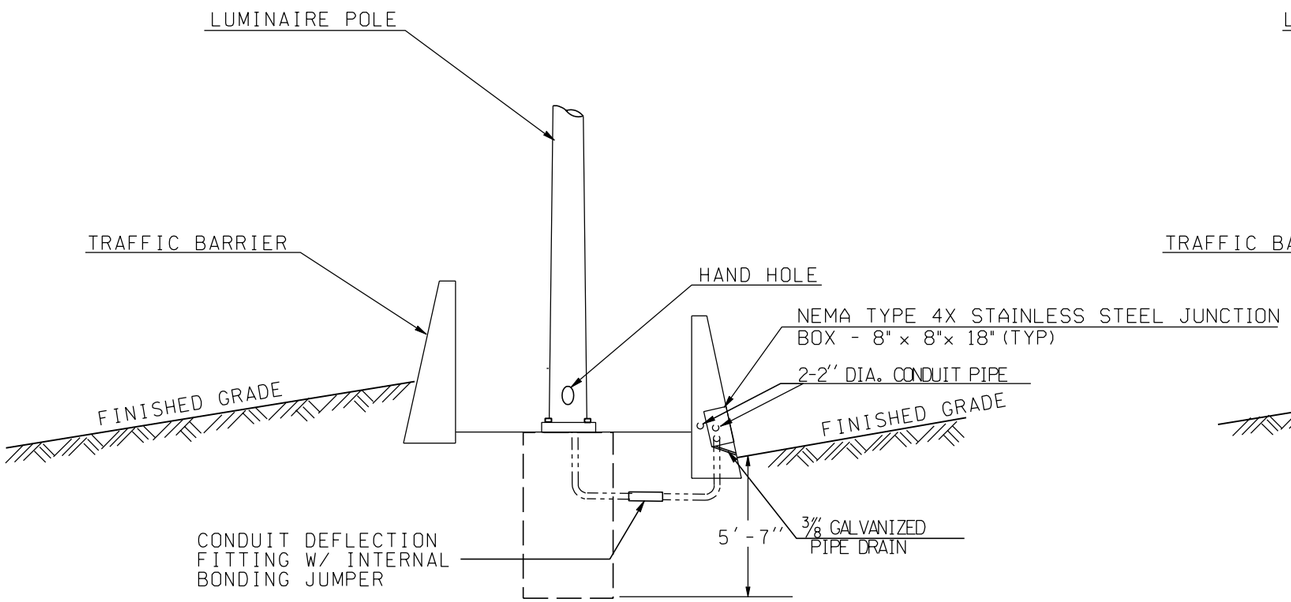

SEE STANDARD PLAN J-1b AND ROADWAY SECTION (FILL IN) FOR APPLICABLE DETAILS

LUMINAIRE NO.	STATION
(FILL IN)	(FILL IN)
(FILL IN)	(FILL IN)

DETAIL A

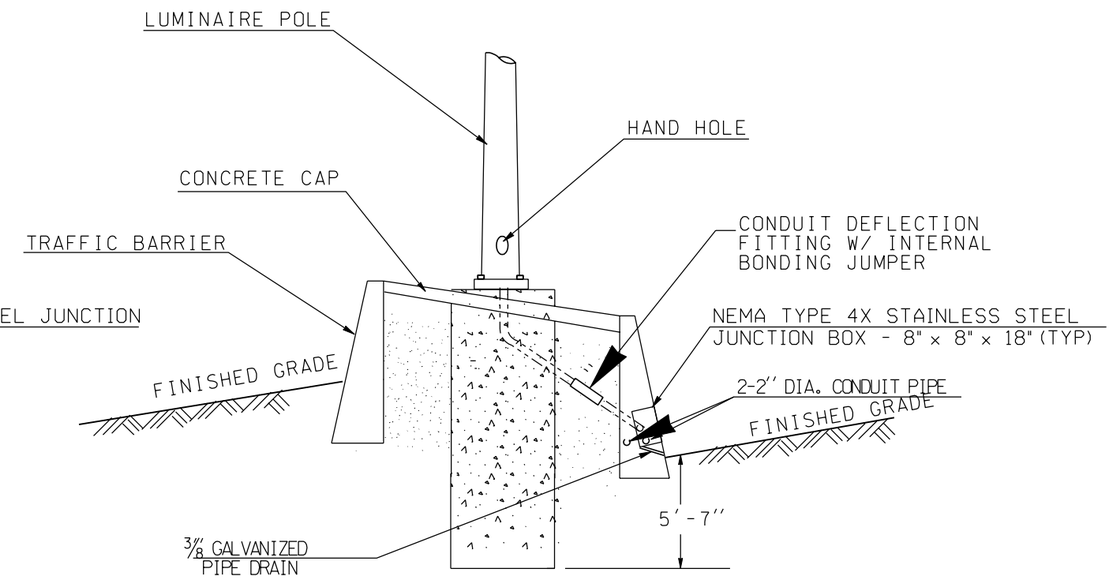

SEE STANDARD PLAN J-1b AND ROADWAY SECTION A FOR APPLICABLE DETAILS

LUMINAIRE NO.	STATION
(FILL IN)	(FILL IN)

DETAIL B

LIGHT STANDARD BARRIER FOUNDATION DETAIL

(FOR BARRIER RAIL DETAILS SEE SHEET XXX-XXX)

	DATE	DATE	REVISION	BY
DESIGNED BY				
ENTERED BY				
CHECKED BY				
PROJ. ENGR.		10-6-99	TEXT EDITS	JH
REGIONAL ADM.		2-9-99	NEW ENGLISH SHEET	JH

REGION NO.	STATE	FED.AID PROJ.NO.
10	WASH	

JOB NUMBER

CONTRACT NO.

ENVIRONMENTAL AND ENGINEERING SERVICE CENTER

Washington State Department of Transportation

ENGLISH

ILLUMINATION DETAILS

1.13E

SHEET OF SHEETS

FOUNDATION DEPTH TABLE							
ALLOWABLE LATERAL BEARING PRESSURE (psf)	FOUNDATION TYPE	XYZ (CUBIC FEET) TYPE II, III AND SD MAST ARM STANDARDS					
		600	900	1,200	1,500	1,900	2,300
1,000	3' ROUND	10'	10'	11'	11'	13'	15'
	3' SQUARE	8'	8'	9'	9'	10'	11'
	4' ROUND	8'	8'	9'	9'	10'	11'
1,500	3' ROUND	8'	8'	9'	11'	13'	15'
	3' SQUARE	7'	7'	7'	8'	8'	9'
	4' ROUND	7'	7'	7'	8'	8'	9'
2,500	3' ROUND	6'	6'	7'	11'	13'	15'
	3' SQUARE	6'	6'	6'	6'	7'	7'
	4' ROUND	6'	6'	6'	6'	7'	7'

THIS TABLE BASED ON A Ø VALUE OF 26°. FOR DOUBLE MAST ARM STANDARDS WITH 90° BETWEEN ARMS, USE THE LARGER XYZ VALUE FOR FOUNDATION DEPTH SELECTION. A SPECIAL FOUNDATION DESIGN IS REQUIRED FOR DOUBLE ARM STANDARDS IF THE ANGLE IS NOT 90°.

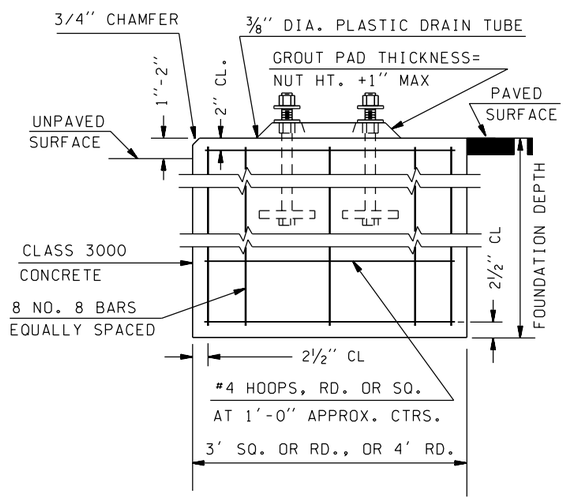

FOUNDATION DETAIL

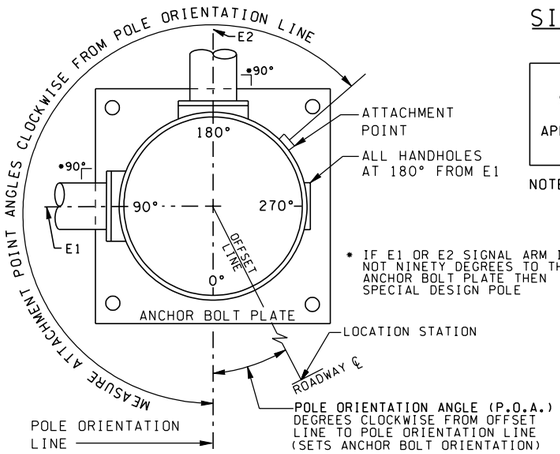

* IF E1 OR E2 SIGNAL ARM IS NOT NINETY DEGREES TO THE ANCHOR BOLT PLATE THEN SPECIAL DESIGN POLE

POLE ORIENTATION AND ATTACHMENT POINT DETAIL

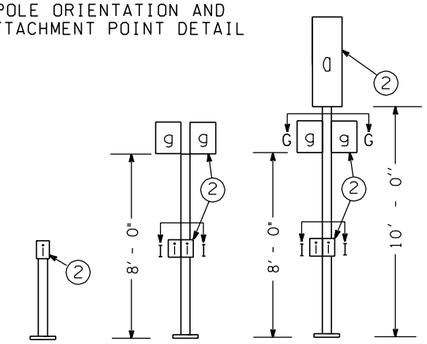

TYPE PPB
PPB POST

TYPE PS
PED. HEAD STANDARD

TYPE I
VEHICLE HEAD STANDARD

SIGNAL STANDARD IDENTIFICATION TAG DETAIL

		EXAMPLE
STD. NO. XX	SIGNAL STANDARD NO.	STD. NO. 02
SRXXX, MP XXX.XX	STATE ROUTE AND MILE POST NO.	SR97, MP 069.09
MANUFACTURER		MANUFACTURER
APPROVED DWG. XXXXXX	APPROVED DRAWING NO.	APPROVED DWG. AB12345
FAB. X/XX/XXXX	FABRICATION DATE	FAB. 6/14/2002

NOTE: CORROSION RESISTANT METAL TAG SECURED WITH (2) 0.125" RIVETS AS FOLLOWS: POLE SHAFT - LOCATED WITHIN 6" ABOVE HAND HOLE, SIGNAL AND LUMINAIRE MAST ARM - LOCATED WITHIN 6" OF THE POLE SHAFT CONNECTION POINT. TEXT SHALL BE A MINIMUM OF 3/16" HIGH, STAMPED OR EMBOSSED.

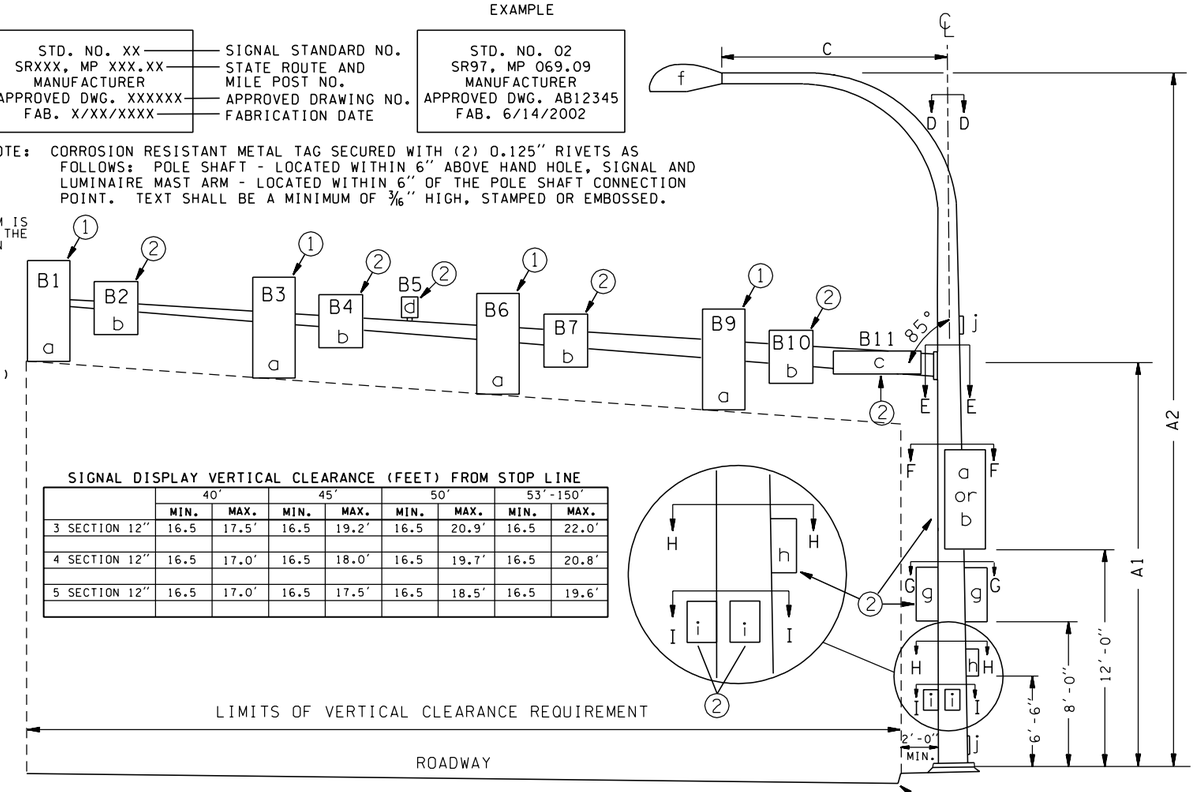

SIGNAL DISPLAY VERTICAL CLEARANCE (FEET) FROM STOP LINE

	40'		45'		50'		53'-150'	
	MIN.	MAX.	MIN.	MAX.	MIN.	MAX.	MIN.	MAX.
3 SECTION 12"	16.5	17.5'	16.5	19.2'	16.5	20.9'	16.5	22.0'
4 SECTION 12"	16.5	17.0'	16.5	18.0'	16.5	19.7'	16.5	20.8'
5 SECTION 12"	16.5	17.0'	16.5	17.5'	16.5	18.5'	16.5	19.6'

TYPE II
MAST ARM SIGNAL STANDARD

TYPE III
COMBINATION LIGHTING AND MAST ARM SIGNAL STANDARD

TYPE IV
STRAIN POLE STANDARD

TYPE V
COMBINATION LIGHTING AND STRAIN POLE STANDARD

TYPE SD
SPECIAL DESIGN STANDARD

SIGNAL STANDARD DETAIL CHART

STD. No.	SR No.	SR MILE POST	FIELD LOCATION STATION	OFFSET	LT.	RT.	P.O.A.	TYPE	MOUNTING HEIGHT(FT) A1	A2	SIGNAL MAST ARM DATA: OFFSET DISTANCES (FT) (Z) (POLE ℄ TO ATTACHMENT POINT) B1	B2	B3	B4	B5	B6	B11	WINDLOAD AREAS (FT)² (X)(Y) B1	B2	B3	B4	B6	B11	(X)(Y)(Z) TOTAL(FT)³	LUMINAIRE ARM(FT) C	POLE ATTACHMENT POINT ANGLES (deg) D	E1	E2	F	G1	G2	H	I1	I2	FOUNDATION DEPTHS(FT) 3' RD.	3' SQ.	4' RD.	REMARKS

LEGEND

a. Vehicle Display
b. Sign
c. Street Name Sign
d. Pre-Empt Detector
e. Deleted (10/22/90)
f. Luminaire
g. Pedestrian Display
h. Cabinet
i. PPB-M
j. Handhole

NOTES

(1) MOUNTING COUPLING INSTALLED AT OFFSET DISTANCE INDICATED IN CHART.

ALTERNATE NOTE 1
FOR TYPE N MOUNT ONLY
DRILL 1" HOLE IN MAST ARM AND INSTALL PLASTIC SPLIT BUSHING FOR CABLE ENTRANCE.

(2) FIELD INSTALLED.

FILE NAME	s:\414126\Electrical\MASTER_FILES\DETAILS\SIGNAL_E.DGN						
TIME	07:21:04 AM				REGION NO.	STATE	FED.AID PROJ.NO.
DATE	08/14/2002	SIGNAL STANDARD INDENT. TAG DETAIL	7-15-02	JH	10	WASH	
		P.O.A. & attachment point detail	7-23-01	JH	JOB NUMBER		
DESIGNED BY	WSDOT	signal standard det chart- text	5-9-00	JH			
ENTERED BY	WSDOT	POLE OR. DET/VERT.CL.	3-14-00	JH			
CHECKED BY	WSDOT	POLE OR. DET/VERT.CL.	3-6-00	JH	CONTRACT NO.		LOCATION NO.
PROJ. ENGR.		NEW SHEET DESIGNATION	6/24/97	BK			
REGIONAL ADM.		REVISION	DATE	BY			

DATE
P.E. STAMP BOX

DATE
P.E. STAMP BOX

Washington State Department of Transportation

ENGLISH

SIGNAL STANDARD

PLOT1
2.01E
SHEET OF SHEETS

FOUNDATION DEPTH TABLE							
ALLOWABLE LATERAL BEARING PRESSURE (psf)	FOUNDATION TYPE	XYZ (CUBIC FEET) TYPE II, III AND SD MAST ARM STANDARDS					
		600	900	1,200	1,500	1,900	2,300
1,000	3' ROUND	10'	10'	11'	11'	13'	15'
	3' SQUARE	8'	8'	9'	9'	10'	11'
	4' ROUND	8'	8'	9'	9'	10'	11'
1,500	3' ROUND	8'	8'	9'	11'	13'	15'
	3' SQUARE	7'	7'	7'	8'	8'	9'
	4' ROUND	7'	7'	7'	8'	8'	9'
2,500	3' ROUND	6'	6'	7'	11'	13'	15'
	3' SQUARE	6'	6'	6'	6'	7'	7'
	4' ROUND	6'	6'	6'	6'	7'	7'

THIS TABLE BASED ON A Ø VALUE OF 26°. FOR DOUBLE MAST ARM STANDARDS WITH 90° BETWEEN ARMS, USE THE LARGER XYZ VALUE FOR FOUNDATION DEPTH SELECTION. A SPECIAL FOUNDATION DESIGN IS REQUIRED FOR DOUBLE ARM STANDARDS IF THE ANGLE IS NOT 90°.

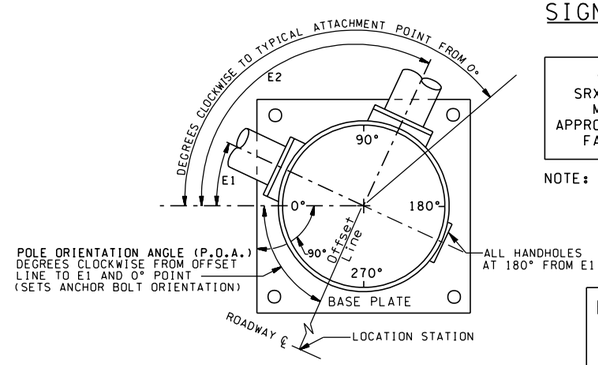

POLE ORIENTATION AND ATTACHMENT POINT DETAIL

SIGNAL STANDARD IDENTIFICATION TAG DETAIL

STD. NO. XX	SIGNAL STANDARD NO.	
SRXXX, MP XXX.XX	STATE ROUTE AND MILE POST NO.	
MANUFACTURER		
APPROVED DWG. XXXXXX	APPROVED DRAWING NO.	
FAB. X/XX/XXXX	FABRICATION DATE	

EXAMPLE

STD. NO. 02
SR97, MP 069.09
MANUFACTURER
APPROVED DWG. AB12345
FAB. 6/14/2002

NOTE: CORROSION RESISTANT METAL TAG SECURED WITH (2) 0.125" RIVETS AS FOLLOWS: POLE SHAFT - LOCATED WITHIN 6" ABOVE HAND HOLE, SIGNAL AND LUMINAIRE MAST ARM - LOCATED WITHIN 6" OF THE POLE SHAFT CONNECTION POINT. TEXT SHALL BE A MINIMUM OF 3/16" HIGH, STAMPED OR EMBOSSED.

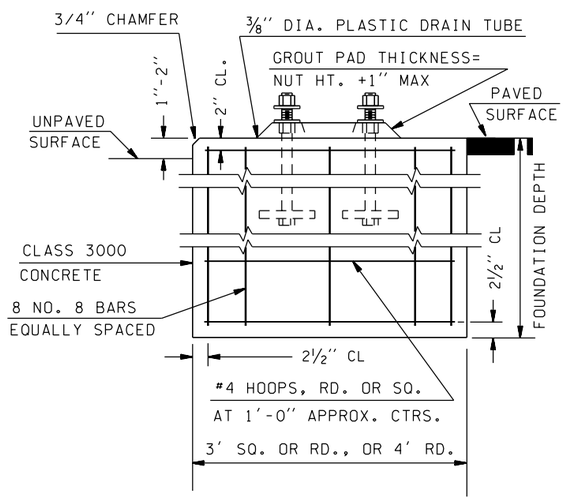

FOUNDATION DETAIL

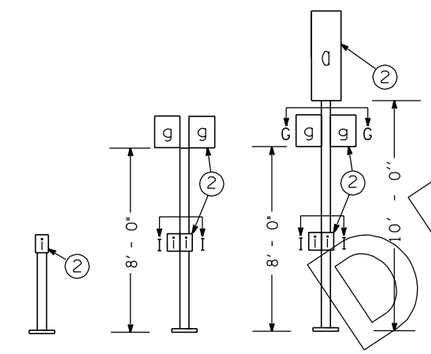

TYPE PPB
PPB POST

TYPE PS
PED. HEAD STANDARD

TYPE I
VEHICLE HEAD STANDARD

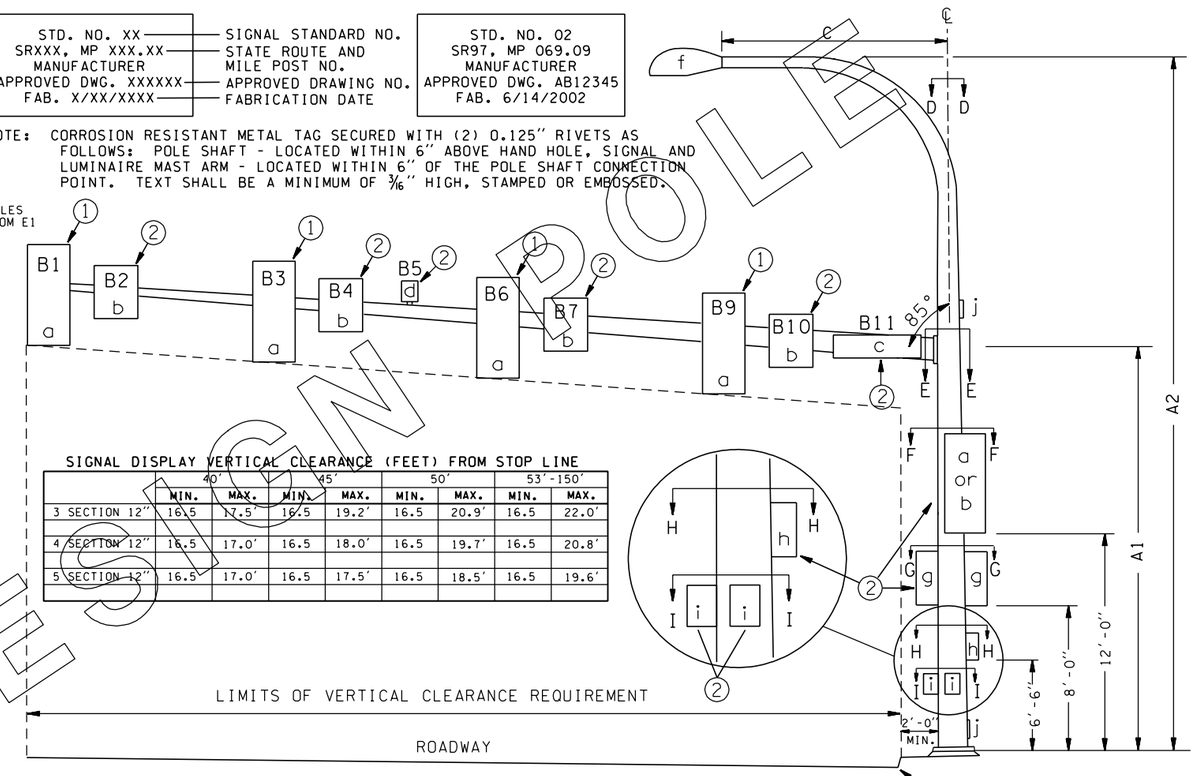

SIGNAL DISPLAY VERTICAL CLEARANCE (FEET) FROM STOP LINE

	40'		45'		50'		53'-150'	
	MIN.	MAX.	MIN.	MAX.	MIN.	MAX.	MIN.	MAX.
3 SECTION 12"	16.5	17.5'	16.5	19.2'	16.5	20.9'	16.5	22.0'
4 SECTION 12"	16.5	17.0'	16.5	18.0'	16.5	19.7'	16.5	20.8'
5 SECTION 12"	16.5	17.0'	16.5	17.5'	16.5	18.5'	16.5	19.6'

TYPE II
MAST ARM SIGNAL STANDARD

TYPE III
COMBINATION LIGHTING AND MAST ARM SIGNAL STANDARD

TYPE IV
STRAIN POLE STANDARD

TYPE V
COMBINATION LIGHTING AND STRAIN POLE STANDARD

TYPE SD
SPECIAL DESIGN STANDARD

SPECIAL DESIGN POLE

SIGNAL STANDARD DETAIL CHART

STD. No.	SR No.	SR MILE POST	FIELD LOCATION STATION	OFFSET	LT.	RT.	P.O.A.	TYPE	MOUNTING HEIGHT(FT) A1	A2	SIGNAL MAST ARM DATA: OFFSET DISTANCES (FT) (Z) (POLE ℄ TO ATTACHMENT POINT) B1	B2	B3	B4	B5	B6	B11	WINDLOAD AREAS (FT)² (X)(Y) B1	B2	B3	B4	B6	B11	(X)(Y)(Z) TOTAL(FT)³	LUMINAIRE ARM(FT) C	POLE ATTACHMENT POINT ANGLES (deg) D	E1	E2	F	G1	G2	H	I1	I2	FOUNDATION DEPTHS(FT) 3' RD.	3' SQ.	4' RD.	REMARKS

LEGEND

a. Vehicle Display
b. Sign
c. Street Name Sign
d. Pre-Empt Detector
e. Deleted (10/22/90)
f. Luminaire
g. Pedestrian Display
h. Cabinet
i. PPB-M
j. Handhole

NOTES

(1) MOUNTING COUPLING INSTALLED AT OFFSET DISTANCE INDICATED IN CHART.

ALTERNATE NOTE 1
FOR TYPE N MOUNT ONLY
DRILL 1" HOLE IN MAST ARM AND INSTALL PLASTIC SPLIT BUSHING FOR CABLE ENTRANCE.

(2) FIELD INSTALLED.

FILE NAME	s:\414126\Electrical\MASTER_FILES\DETAILS\SIGNAL_E.DGN				
TIME	07:28:35 AM				
DATE	08/14/2002				
DESIGNED BY					
ENTERED BY		SIGNAL STANDARD INDENT. TAG DETAIL	7-15-02	JH	
CHECKED BY		signal standard det chart- text	5-9-00	JH	
PROJ. ENGR.		NEW SHEET W/SPECIAL POL OR. DET.	3-6-00	JH	
REGIONAL ADM.		REVISION	DATE	BY	

REGION NO.	STATE	FED.AID PROJ.NO.
10	WASH	
JOB NUMBER		
CONTRACT NO.		LOCATION NO.

P.E. STAMP BOX — DATE

P.E. STAMP BOX — DATE

Washington State Department of Transportation

ENGLISH

SIGNAL STANDARD

PLOT11

2.01E

SHEET OF SHEETS

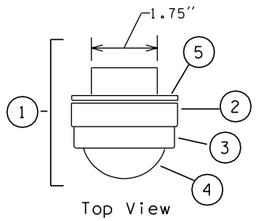

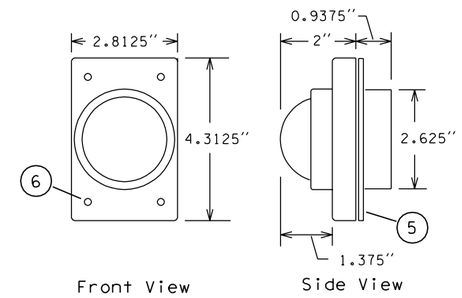

PUSHBUTTON

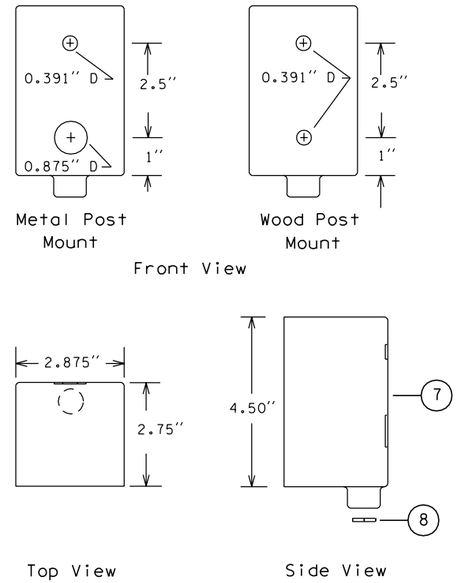

CONDULET DRILLING DETAIL

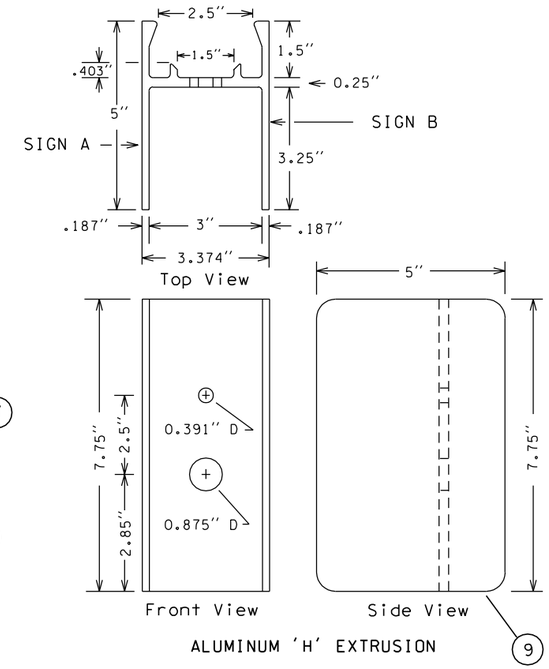

ALUMINUM 'H' EXTRUSION
DRILLING DETAIL

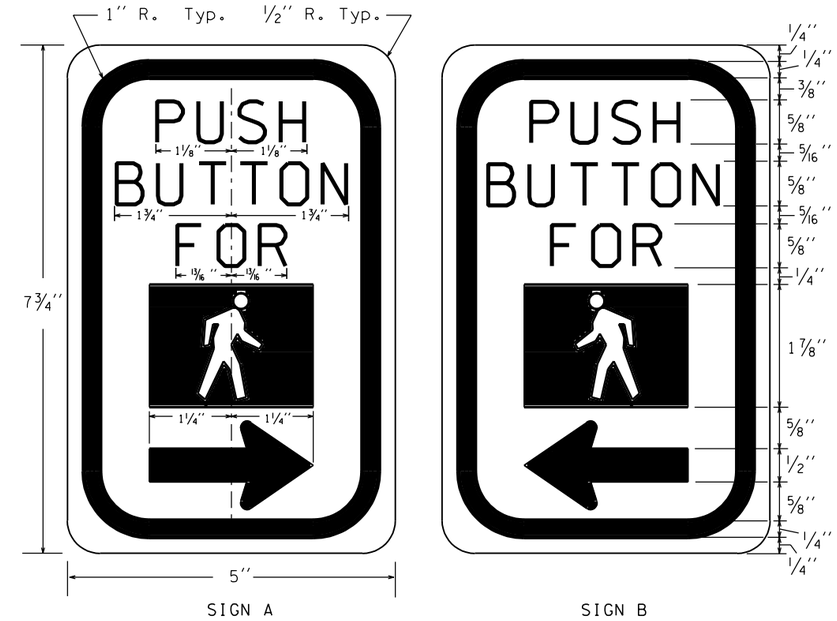

SIGN R10-4b

LETTERS SHALL BE 1/8'' STROKE NON-REFLECTORIZED BLACK ENAMEL
BORDER, ARROW AND BOX SHALL BE NON-REFLECTORIZED BLACK ENAMEL
BACKGROUND AND PEDESTRIAN SHALL BE NON-REFLECTORIZED WHITE ENAMEL

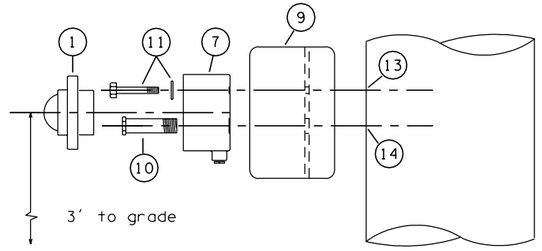

PPB-M
(PED PUSHBUTTON - METAL POLE)
METAL POLE INSTALLATION DETAIL

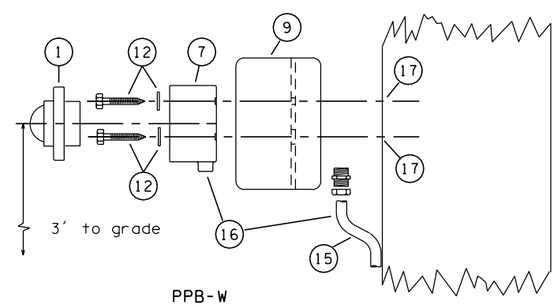

PPB-W
(PED PUSHBUTTON - WOOD POLE)
WOOD POLE INSTALLATION DETAIL (BOTTOM FEED)

NOTE: '' PPB-MR'' AND ''PPB-WR'' MEANS SIGNS ''A'' AND ''B'' ARE REVERSED.

KEY

1. PUSHBUTTON SWITCH ASSEMBLY
2. CAST METAL HOUSING
3. PROTECTIVE COLLAR
4. 2 1/4'' DIA CHROME MUSHROOM PUSHBUTTON SWITCH WITH MOMENTARY CONTACTS
5. GASKET
6. STAINLESS STEEL FASTENER (TYPICAL)
7. CAST ALUMINUM CONDULET
8. ALUMINUM PLUG WITH #30 DRILLED WEEP HOLE. REMOVE TO PROVIDE WIRE ENTRANCE ON TIMBER POLE INSTALLATION
9. ALUMINUM 'H' EXTRUSION
10. CHASE NIPPLE - 7/8'' HEX HEAD X 1/2'' PIPE THREAD X 2 1/2'' LONG
11. 3/8'' - 16 X 2 1/2'' STAINLESS STEEL BOLT WITH WASHER
12. 3/8'' X 4'' LAG BOLT WITH WASHER
13. DRILL & TAP SHAFT FOR 3/8'' - 16 BOLT
14. DRILL & TAP SHAFT FOR 1/2'' NIPPLE
15. CONDUIT & FITTINGS AS REQUIRED FOR TIMBER POLE INSTALLATION (BOTTOM FEED)
16. REVERSE CONDULET AND CONDUIT FOR TOP FEED
17. DRILL PILOT HOLE FOR 3/8'' LAG BOLT

FILE NAME	s:\414126\Electrical\MASTER_FILES\DETAILS\SIGNAL_E.DGN							PLOT2
TIME	07:24:20 AM				REGION NO. 10	STATE WASH	FED.AID PROJ.NO.	2.02E
DATE	08/14/2002				JOB NUMBER			SHEET OF SHEETS
DESIGNED BY	WSDOT							
ENTERED BY	WSDOT							
CHECKED BY	WSDOT				CONTRACT NO.		LOCATION NO.	
PROJ. ENGR.		NEW SHEET DESIGNATION	6/24/97	BK				
REGIONAL ADM.		REVISION	DATE	BY				

P.E. STAMP BOX DATE

P.E. STAMP BOX DATE

Washington State Department of Transportation

ENGLISH

PED BUTTON DETAILS

FIELD WIRE TERMINATIONS

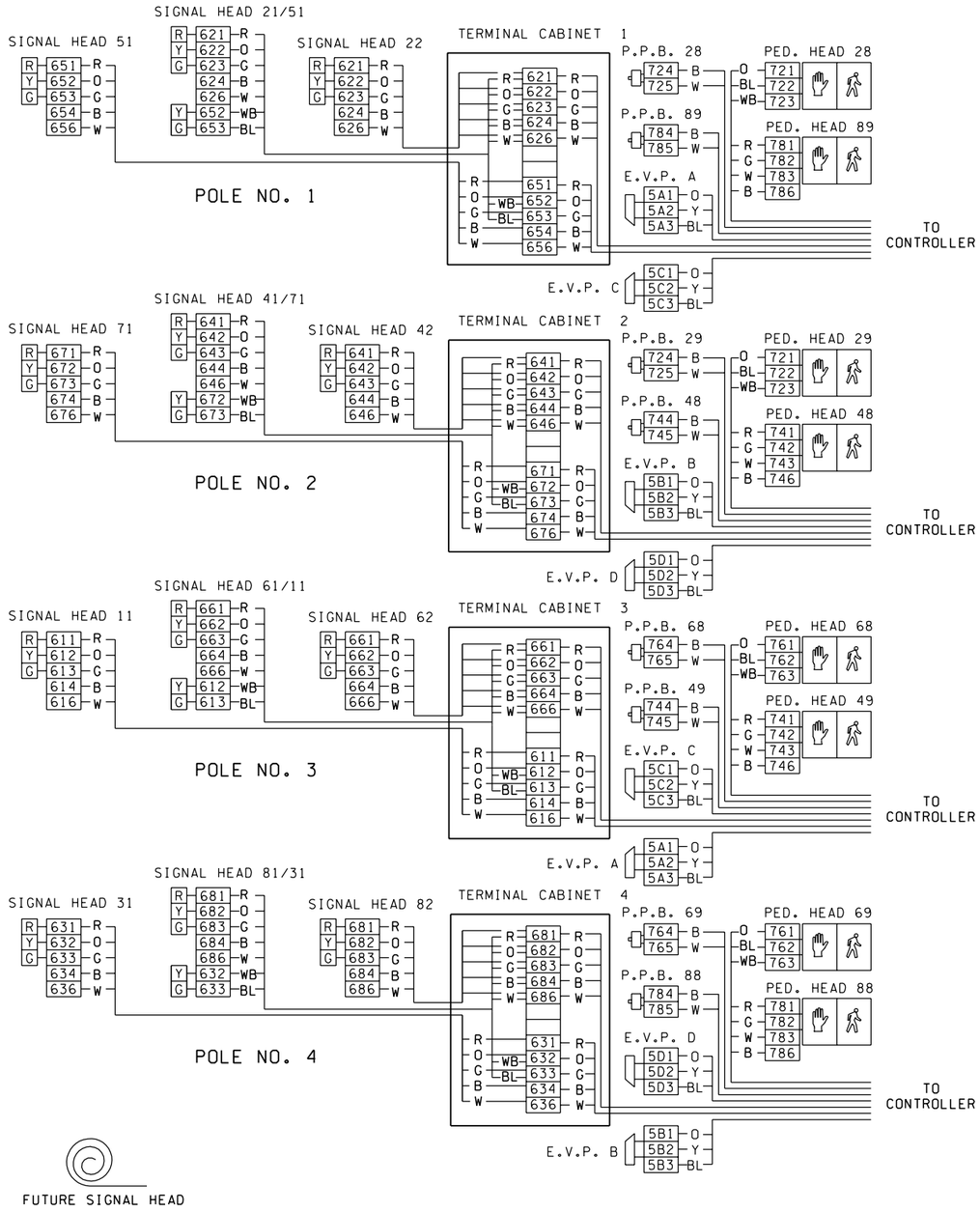

CABINET WIRE TERMINATIONS

DETECTION INPUT TERMINALS

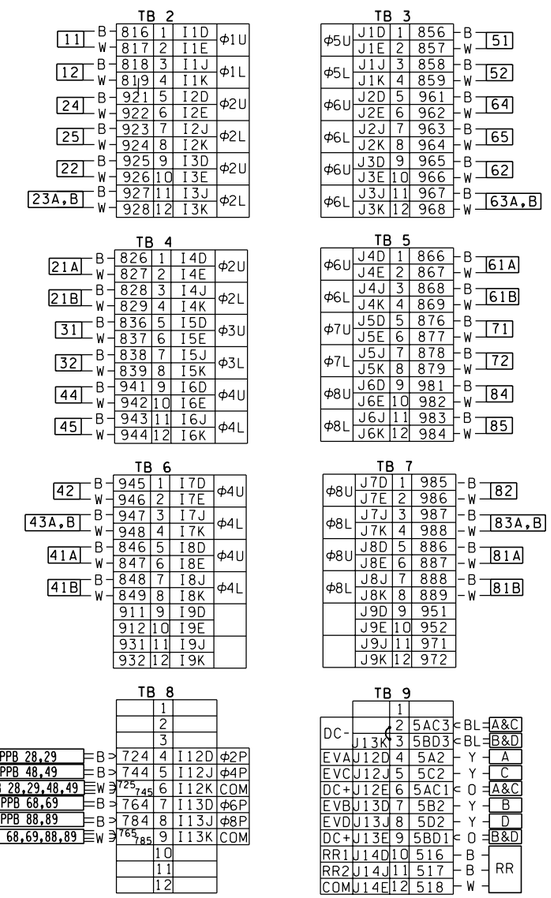

DISPLAY OUTPUT TERMINALS

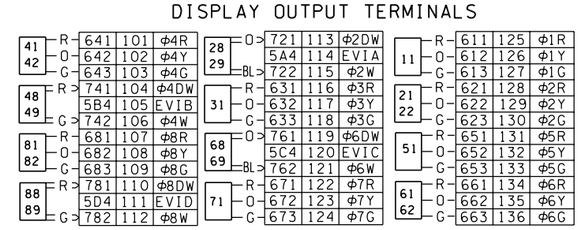

COORDINATION

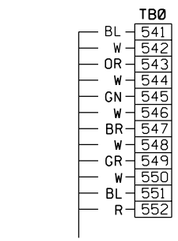

SERVICE PANEL

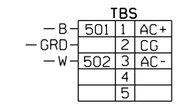

AUXILIARY PREEMPTION

(CONNECTED VIA 262W WIRE HARNESS TO M262 DISCRIMINATOR)

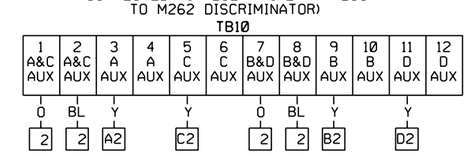

NOTE: TERMINATE ALL WIRING IDENTIFIED AS AC- (6*6 AND 7*3) AT THE AC-BUSS.

SEAL AND COIL ALL SPARE CONDUCTORS AND STORE NEATLY ON THE CABINET FLOOR.

AFTER FIELD WIRES ARE INSTALLED, INSTALL 2C(SH) JUMPER WIRES BETWEEN THE FOLLOWING INPUT TERMINAL PAIRS:

816 --B-- 967
817 --W-- 968

856 --B-- 927
857 --W-- 928

876 --B-- 947
877 --W-- 948

836 --B-- 987
837 --W-- 988

DELETE THIS SECTION IF THE 239 PROGRAM IS SPECIFIED

FILE NAME	s:\414126\Electrical\MASTER_FILES\DETAILS\SIGNAL_E.DGN						PLOT13
TIME	07:25:15 AM	LOOP TERMINATIONS FOR *2 & *5 LOOPS	8/21/01	KC	REGION NO. 10 / STATE WASH	FED.AID PROJ.NO.	2.03E
DATE	08/14/2002	PHASE SYMB. REPLACED TO CAB. WIRE TERM.	6/26/01	TC			
		TB2-TB7 DET.INPUT CHANGES	4/19/01	JH	JOB NUMBER		SHEET OF SHEETS
DESIGNED BY	WSDOT	CHANGED FONTS	7/09/99	JH			
ENTERED BY	WSDOT	NEW SHEET DESIGNATION	6/24/97	BK			
CHECKED BY	WSDOT	SERVICE PANEL "GRD"	6/13/97	BK	CONTRACT NO.	LOCATION NO.	
PROJ. ENGR.		TERMINAL CAB. NOS.	4/29/97	BK			
REGIONAL ADM.		REVISION	DATE	BY			

P.E. STAMP BOX DATE

P.E. STAMP BOX DATE

Washington State Department of Transportation

ENGLISH

WIRING TERMINATIONS

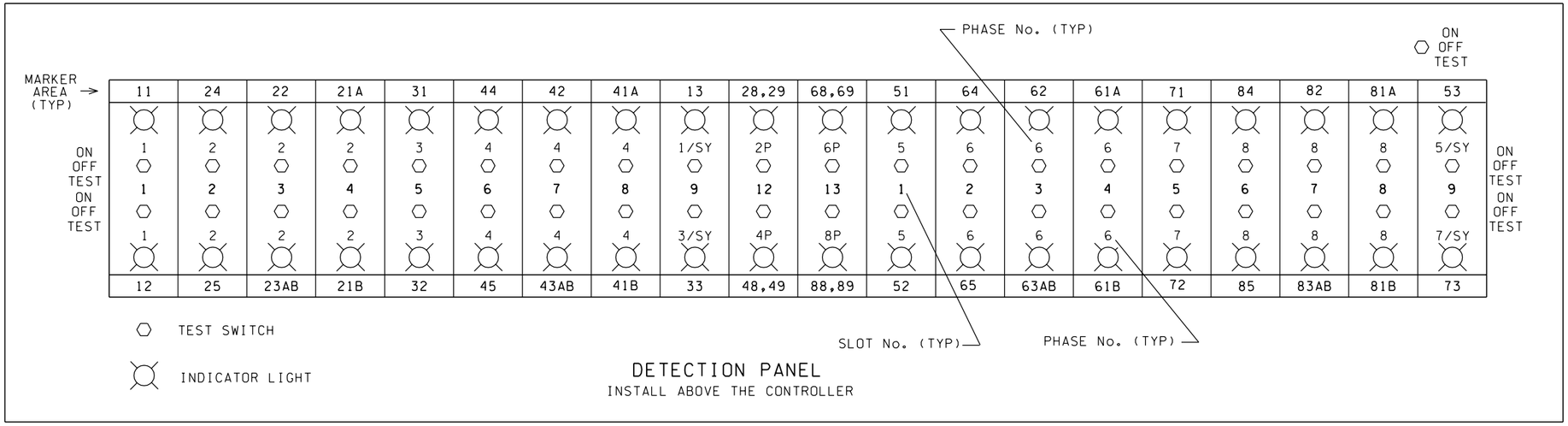

DETECTION PANEL
INSTALL ABOVE THE CONTROLLER

PREEMPTION SCHEDULE

CIRCUIT	PHASE(S)
A	2 & 5
B	4 & 7
C	1 & 6
D	3 & 8

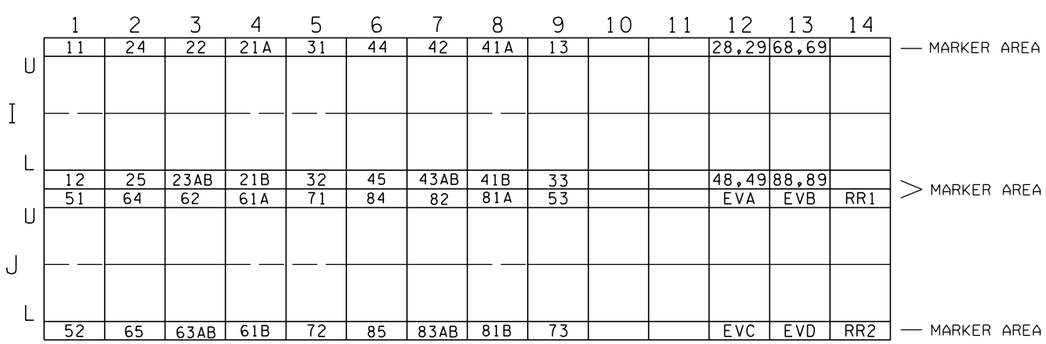

INPUT FILE MARKING DETAIL

PHASE DIAGRAM

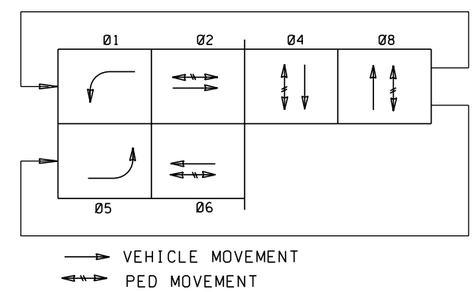

DISPLAY PANEL

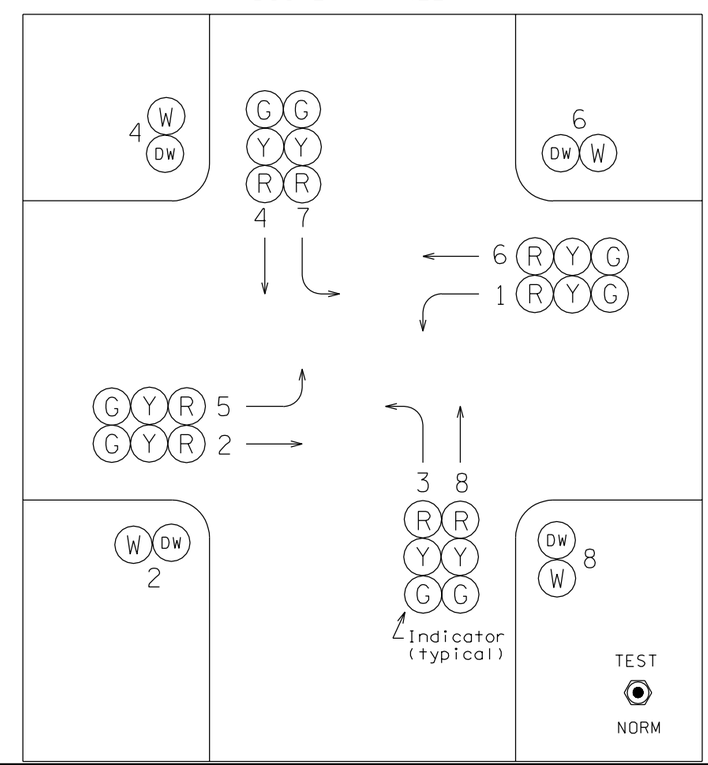

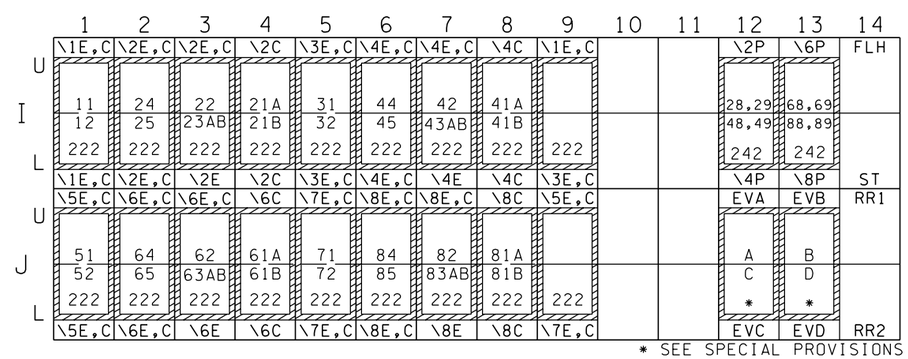

* SEE SPECIAL PROVISIONS

INPUT FILE LAYOUT - PROGRAM WAPITI W4IKS

MODULE
XX-XX INPUT NO.
XX-XX INPUT NO.
XXX MODEL TYPE

E = EXTENSION
C = CALL

PHASE DIAGRAM

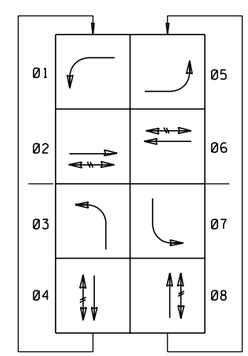

FILE NAME	s:\414126\Electrical\MASTER_FILES\DETAILS\SIGNAL_E.DGN						
TIME	07:26:07 AM	LOOP POSITIONS FOR •2 & •5 LOOPS	8/21/01	KC	REGION NO. 10	STATE WASH	FED.AID PROJ.NO.
DATE	08/14/2002	INDICATOR LT/INPUT FILE # CHNGS	4/19/01	JH			
		•ADDED NOTE	9/22/99	JH	JOB NUMBER		
DESIGNED BY	WSDOT	TEXT EDIT	3/24/99	JH			
ENTERED BY	WSDOT	ADD "WAPITI W4IKS"	1/28/99	JH			
CHECKED BY	WSDOT	DELETE MOD. # 262, 521	1/28/98	BK	CONTRACT NO.		LOCATION NO.
PROJ. ENGR.		NEW SHEET DESIGNATION	6/24/97	BK			
REGIONAL ADM.		REVISION	DATE	BY			

DATE
P.E. STAMP BOX

DATE
P.E. STAMP BOX

Washington State Department of Transportation

ENGLISH

INPUT FILE AND DISLAY PANEL

PLOT4

2.04E

SHEET OF SHEETS

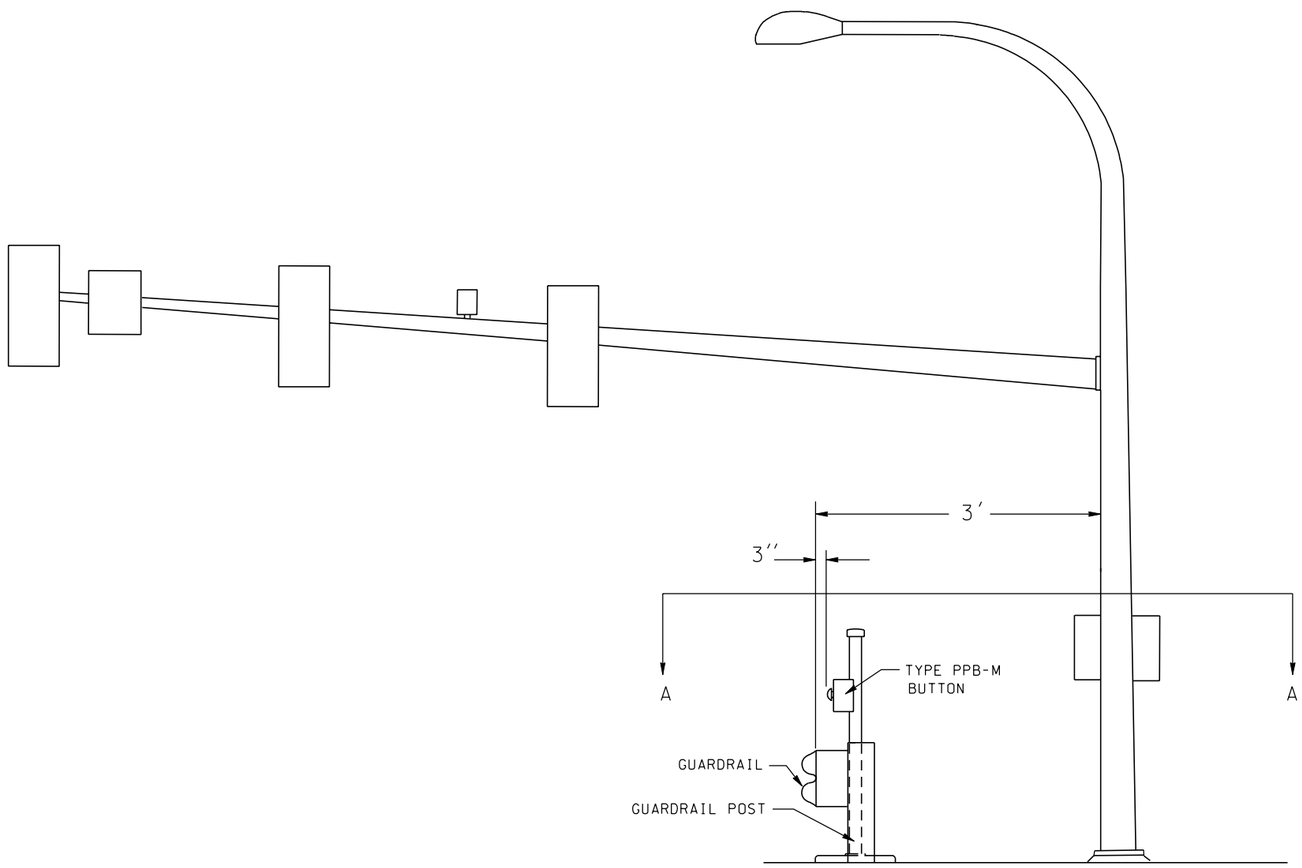

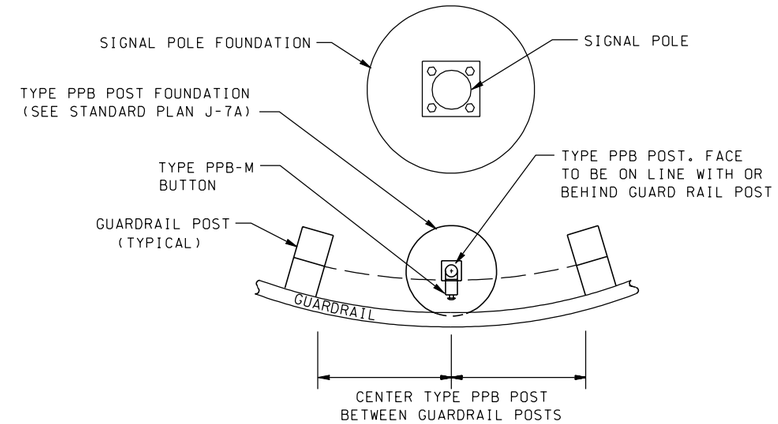

SECTION A-A
(ON CURVE)

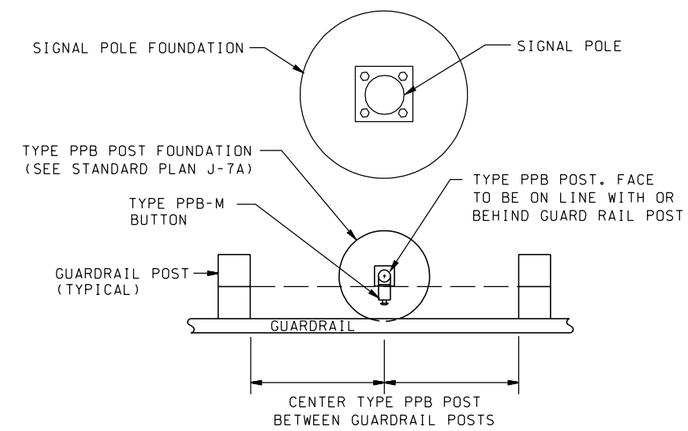

SECTION A-A

SIGNAL POLE, PEDESTRIAN PUSHBUTTON POST INSTALLATION DETAIL

FILE NAME	s:\414126\Electrical\MASTER_FILES\DETAILS\SIGNAL_E.DGN						PLOT5
TIME	07:26:56 AM			REGION NO.	STATE	FED.AID PROJ.NO.	2.05E
DATE	08/14/2002			10	WASH		
DESIGNED BY				JOB NUMBER			SHEET
ENTERED BY	WSDOT						OF
CHECKED BY		FIXED TEXT	2/2/99	JH	CONTRACT NO.	LOCATION NO.	SHEETS
PROJ. ENGR.		NEW SHEET DESIGNATION	6/24/97	BK			
REGIONAL ADM.		REVISION	DATE	BY			

P.E. STAMP BOX DATE

P.E. STAMP BOX DATE

Washington State Department of Transportation

ENGLISH

SIGNAL & PED PUSHBUTTON POLES

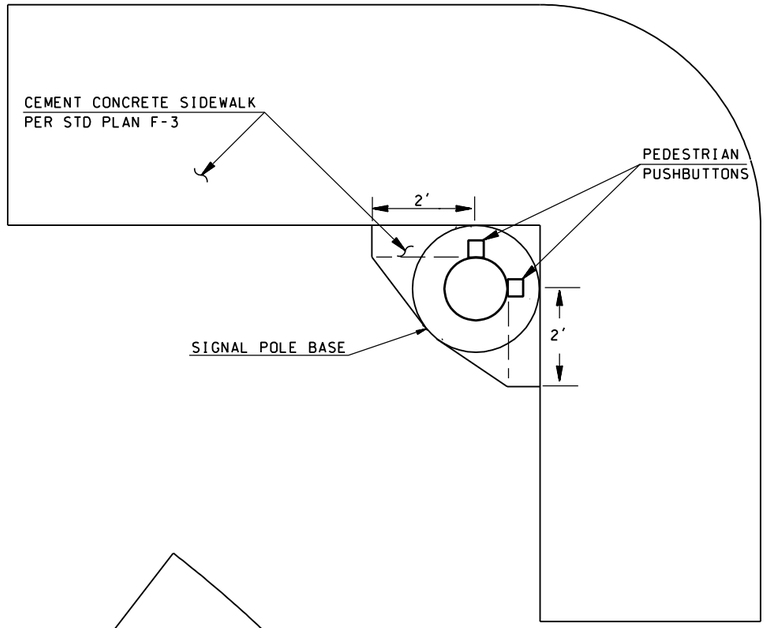

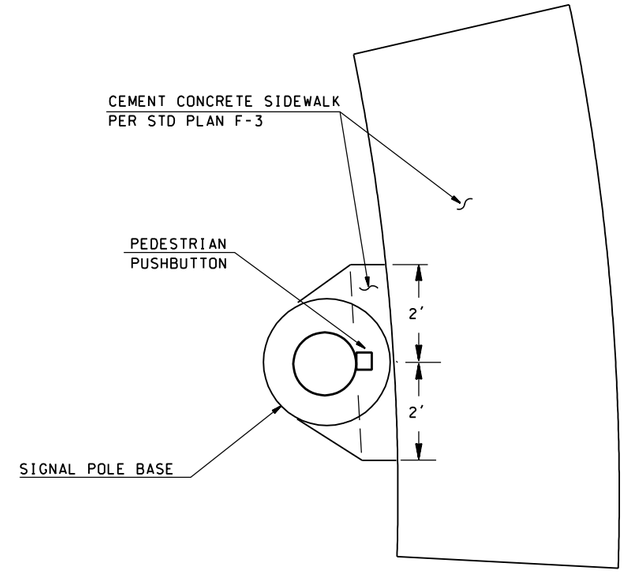

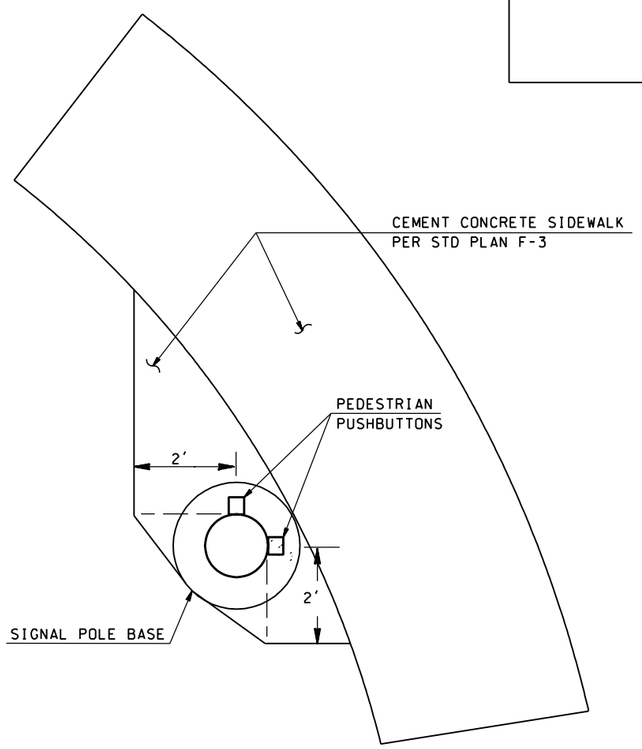

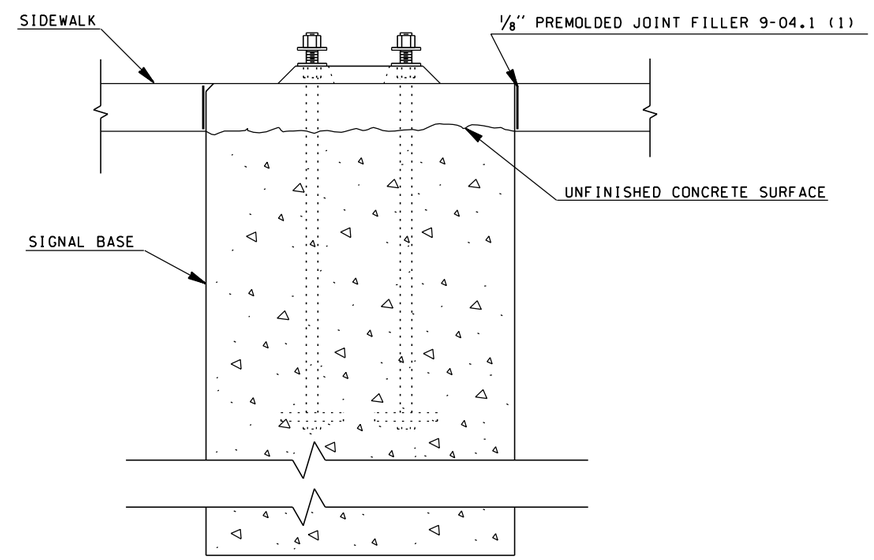

FILE NAME	s:\414126\Electrical\MASTER_FILES\DETAILS\SIGNAL_E.DGN					
TIME	07:27:49 AM			REGION NO.	STATE	FED.AID PROJ.NO.
DATE	08/14/2002			10	WASH	
				JOB NUMBER		
DESIGNED BY	WSDOT					
ENTERED BY	WSDOT					
CHECKED BY	WSDOT	NEW SHEET DESIGNATION	6/24/97	TEV	CONTRACT NO.	LOCATION NO.
PROJ. ENGR.		SIGNAL BASE DETAIL	3/19/97	TEV		
REGIONAL ADM.		REVISION	DATE	BY		

DATE
P.E. STAMP BOX

DATE
P.E. STAMP BOX

Washington State
Department of Transportation

ENGLISH

PLOT7

2.07E

SHEET
OF
SHEETS

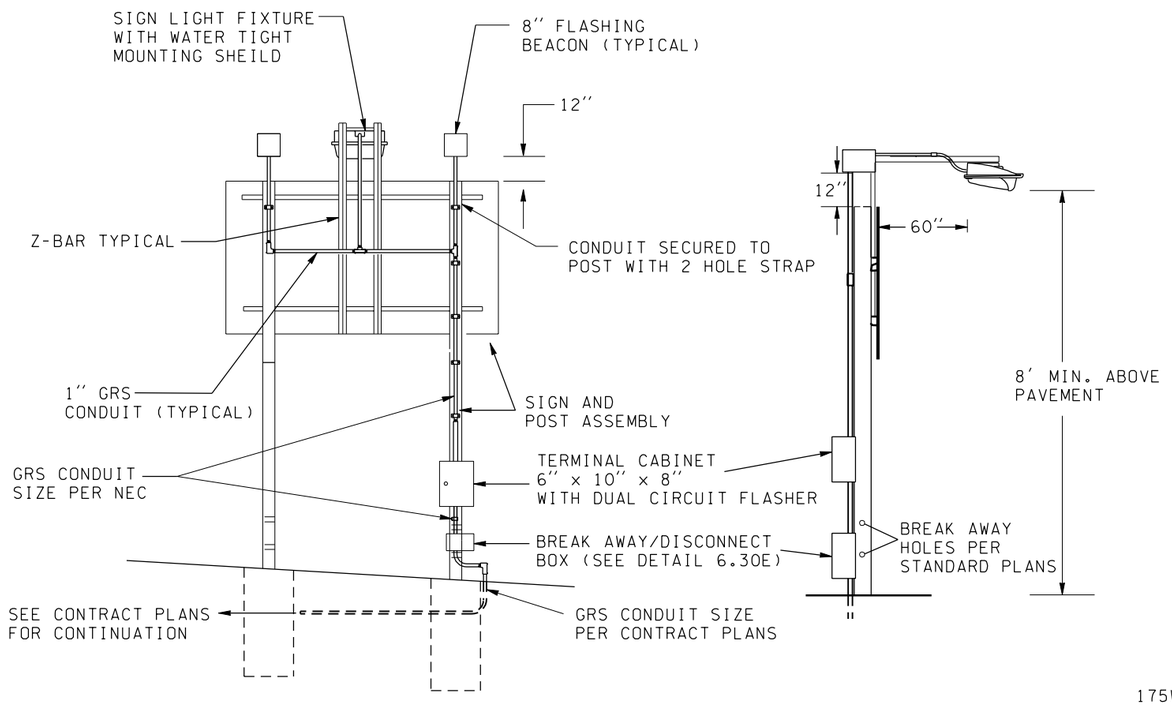

FLASHING BEACON/SIGN LIGHT DETAIL

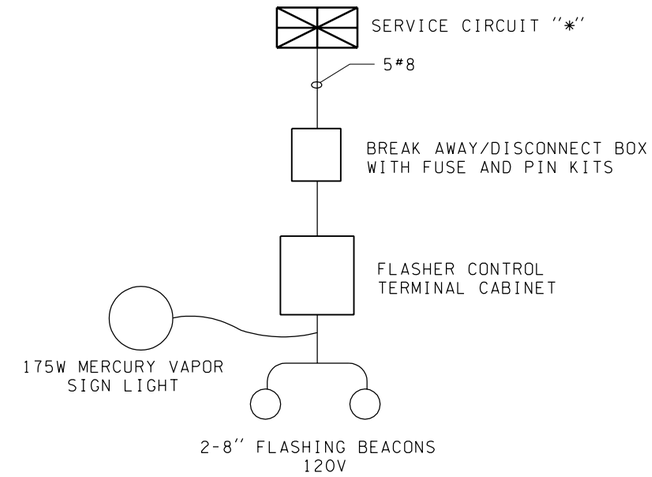

WIRING/SCHEMATIC DIAGRAM

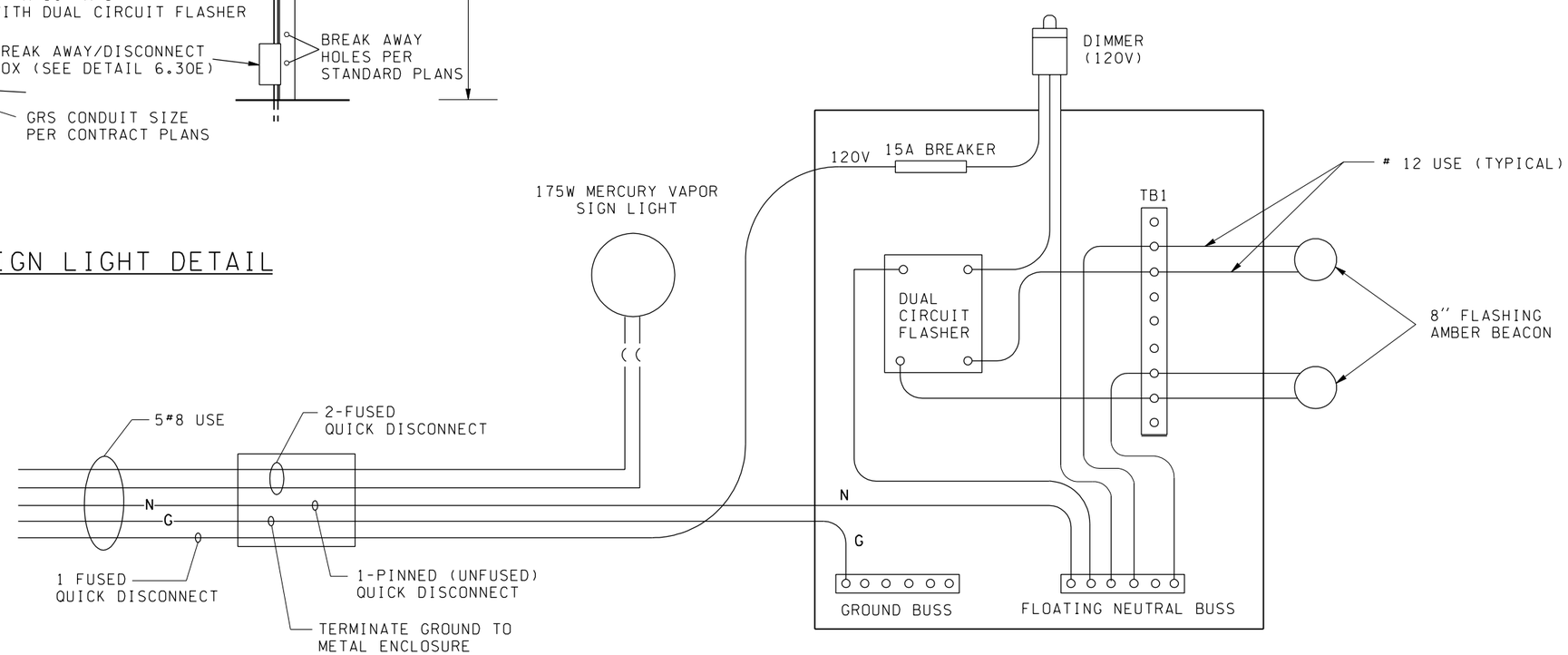

NOTE:

SEE PLANS FOR SIGN LIGHT VOLTAGE.

FILE NAME	S:\414126\Electrical\MASTER_FILES\DETAILS V8\flashing_beacon.dgn						
TIME	08:47:44 AM				REGION NO. 10	STATE WASH	FED.AID PROJ.NO.
DATE	10/08/2003				JOB NUMBER		
DESIGNED BY							
ENTERED BY	K NGUYEN						
CHECKED BY					CONTRACT NO.		LOCATION NO.
PROJ. ENGR.		SIGN LIGHTER VOLT TO 240V/480V	10-06-03	KN			
REGIONAL ADM.		REVISION	DATE	BY			

P.E. STAMP BOX DATE

P.E. STAMP BOX DATE

Washington State Department of Transportation

ENGLISH

FLASHING BEACON DETAIL

PLOT1

2.08E

SHEET 1 OF 1 SHEETS

SIGNAL HEAD DISPLAY NOTES

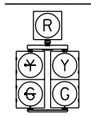

VEHICLE
SIGNAL HEADS
11/61,51/21
31/81,71/41

PEDESTRIAN
SIGNAL HEADS
28,29,48,49
68,69,88,89

1 ALL VEHICLE HEADS SHALL HAVE 12" LENSES. ALL YELLOW VEHICLE HEADS SHALL BE THE CONVENTIONAL TYPE. ALL RED AND GREEN VEHICLE HEADS SHALL HAVE LED LIGHT SOURCES.

2 ALL VEHICLE HEADS SHALL BE INSTALLED ON TYPE "M" MOUNTING.

3 ALL PED HEADS SHALL BE THE LED TYPE.

4 DOUBLE PED HEADS SHALL BE INSTALLED ON TYPE "A" MOUNTING. SINGLE PED HEADS SHALL BE INSTALLED ON TYPE "B" MOUNTING.

5 ALL VEHICLE HEADS SHALL HAVE BACKPLATES.

SIGNAL HEAD DISPLAY NOTES

VEHICLE
SIGNAL HEADS
21,22,41,42
61,62,81,82

VEHICLE
SIGNAL HEADS
11,31
51,71

PEDESTRIAN
SIGNAL HEADS
28,29,48,49
68,69,88,89

1 ALL VEHICLE HEADS SHALL HAVE 12" LENSES. ALL YELLOW VEHICLE HEADS SHALL BE THE CONVENTIONAL TYPE. ALL RED AND GREEN VEHICLE HEADS SHALL HAVE LED LIGHT SOURCES.

2 ALL VEHICLE HEADS SHALL BE INSTALLED ON TYPE "M" MOUNTING.

3 ALL PED HEADS SHALL BE THE LED TYPE.

4 DOUBLE PED HEADS SHALL BE INSTALLED ON TYPE "A" MOUNTING. SINGLE PED HEADS SHALL BE INSTALLED ON TYPE "B" MOUNTING.

5 ALL VEHICLE HEADS SHALL HAVE BACKPLATES.

SIGNAL HEAD DISPLAY NOTES

VEHICLE
SIGNAL HEADS
22,42,62,82

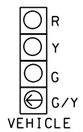

VEHICLE
SIGNAL HEADS
11/61,51/21
31/81,71/41

PEDESTRIAN
SIGNAL HEADS
28,29,48,49
68,69,88,89

1 ALL VEHICLE HEADS SHALL HAVE 12" LENSES. ALL YELLOW VEHICLE HEADS SHALL BE THE CONVENTIONAL TYPE. ALL RED AND GREEN VEHICLE HEADS SHALL HAVE LED LIGHT SOURCES. THE G/Y FOURTH SECTION LENSE SHALL BE FIBER OPTIC.

2 ALL VEHICLE HEADS SHALL BE INSTALLED ON TYPE "M" MOUNTING.

3 ALL PED HEADS SHALL BE THE LED TYPE.

4 DOUBLE PED HEADS SHALL BE INSTALLED ON TYPE "A" MOUNTING. SINGLE PED HEADS SHALL BE INSTALLED ON TYPE "B" MOUNTING.

5 ALL VEHICLE HEADS SHALL HAVE BACKPLATES.

GENERAL NOTE:
1. ALL NUTS, BOLTS, WASHERS, AND OTHER HARDWARE SHALL BE STAINLESS STEEL.
2. IF THE SIGN STRUCTURE INCLUDES A MAINTENANCE WALKWAY, THE LUMINAIRE MOUNTING PLATE SHALL BE BOLTED TO THE WALKWAY GRATING.
3. SEE ALSO SHEET "MONOTUBE SIGN STRUCTURE WIRING DETAILS" FOR CONDUIT, ROUTING, HARDWARE, AND OTHER DETAILS.

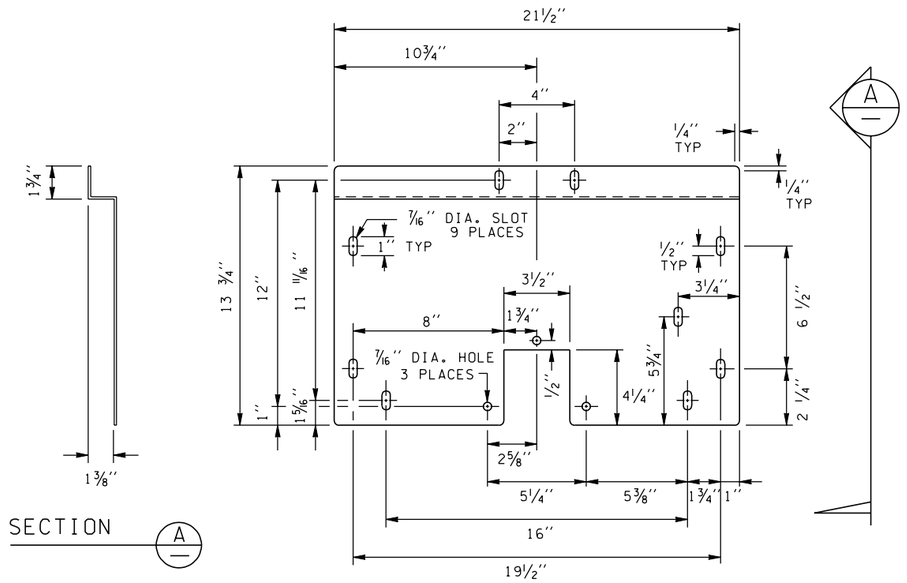

SIGN LIGHTING FIXTURE MOUNTING PLATE DETAIL

ITEM AVAILABLE FROM FIXTURE MANUFACTURER.
MATERIAL IS GALV. 10 GAGE STEEL PLATE.

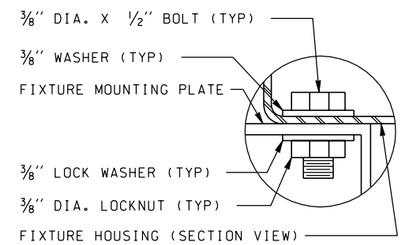

DETAIL A

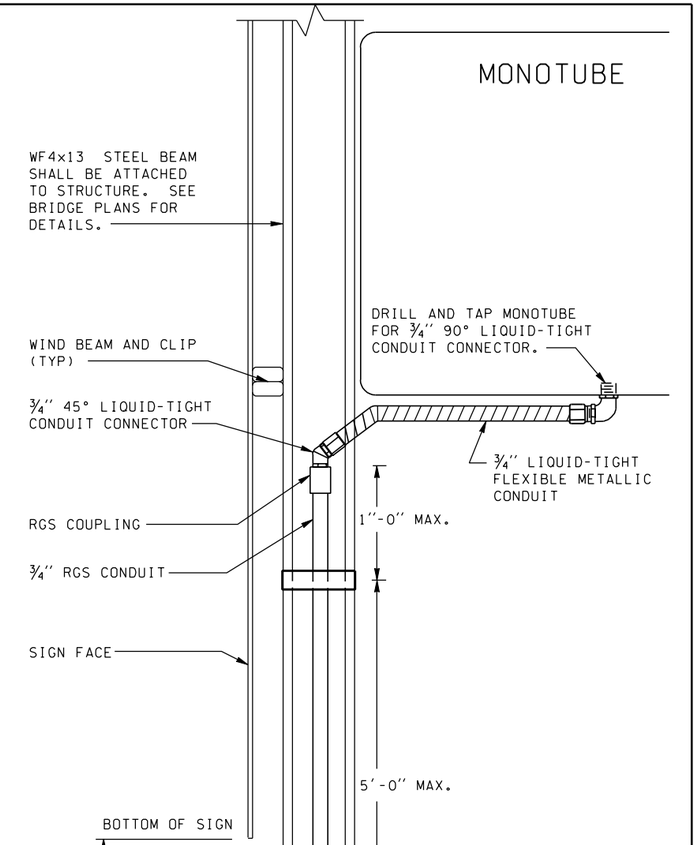

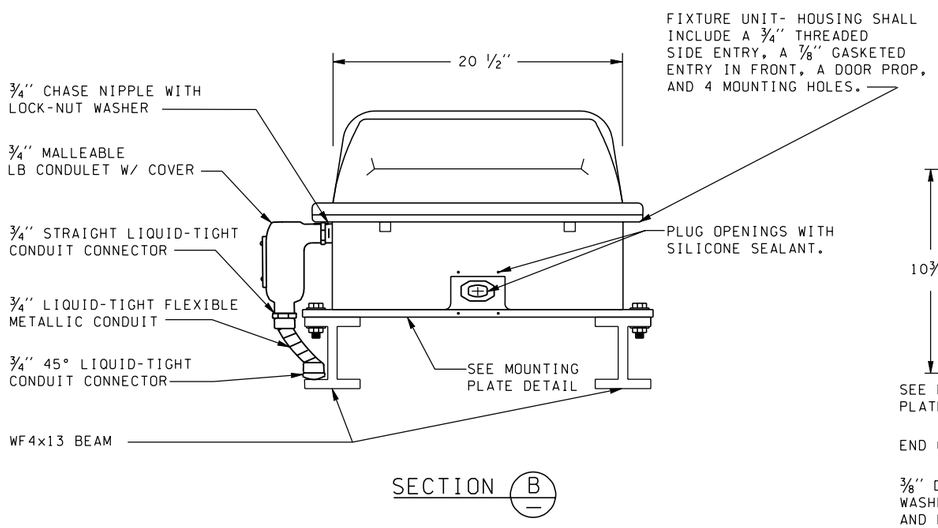

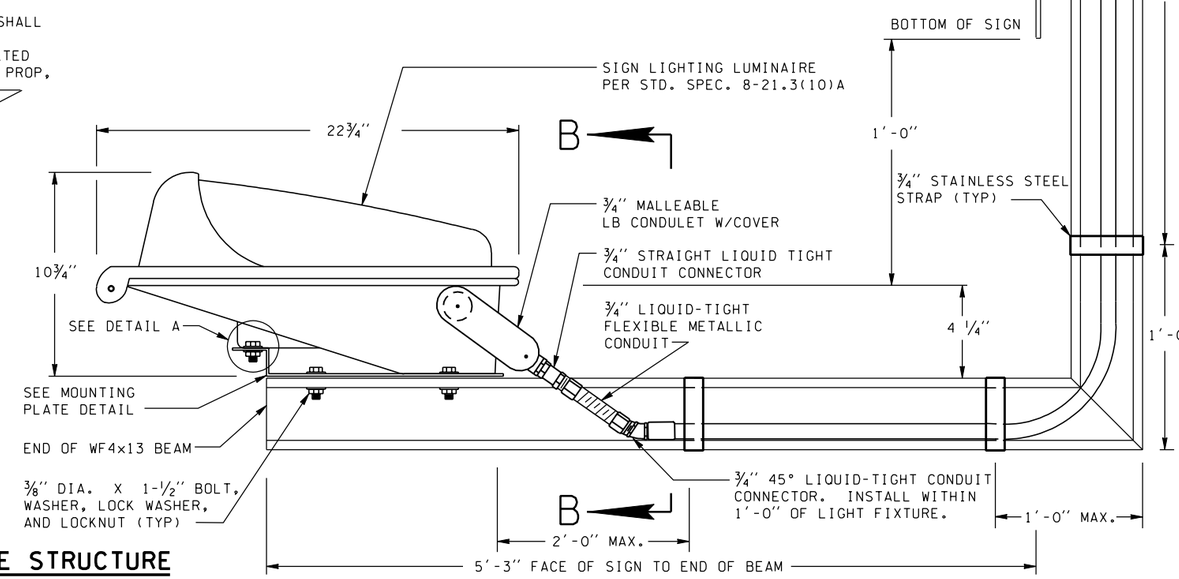

SIGN LIGHT MOUNTING DETAILS FOR MONOTUBE STRUCTURE

(NOT TO SCALE)

FILE NAME	s:\414126\Electrical\MASTER_FILES\DETAILS\signlighters_e.dgn					
TIME	10:50:01 AM			REGION NO.	STATE	FED.AID PROJ.NO.
DATE	09/11/2002			10	WASH	
DESIGNED BY				JOB NUMBER		
ENTERED BY		5-15-02				
CHECKED BY	¾" CONDUIT CONNECT. ADDED	1-08-01	JH	CONTRACT NO.		LOCATION NO.
PROJ. ENGR.	DIM. CHNG TO SIGN	12-12-00	JH			
REGIONAL ADM.	REVISION	DATE	BY			

P.E. STAMP BOX DATE

P.E. STAMP BOX DATE

Washington State Department of Transportation

ENGLISH

SIGN LIGHT MOUNTING DETAILS FOR MONOTUBE STRUCTURE

SHEET 1 OF 2

PLOT1

3.01E

SHEET OF SHEETS

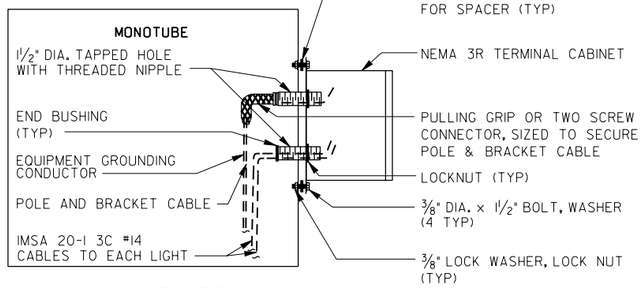

SECTION A-A
NTS

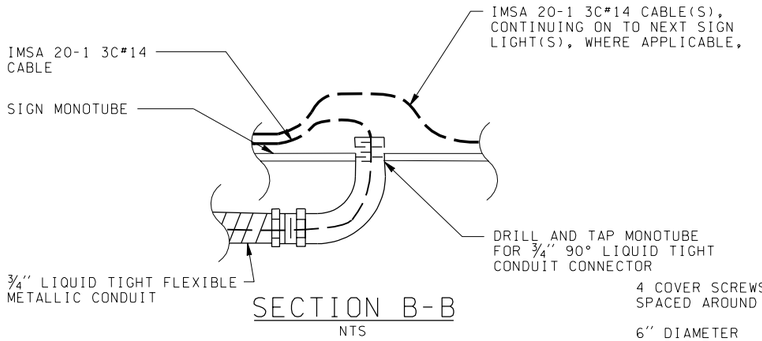

SECTION B-B
NTS

THREADED CONNECTION DETAIL

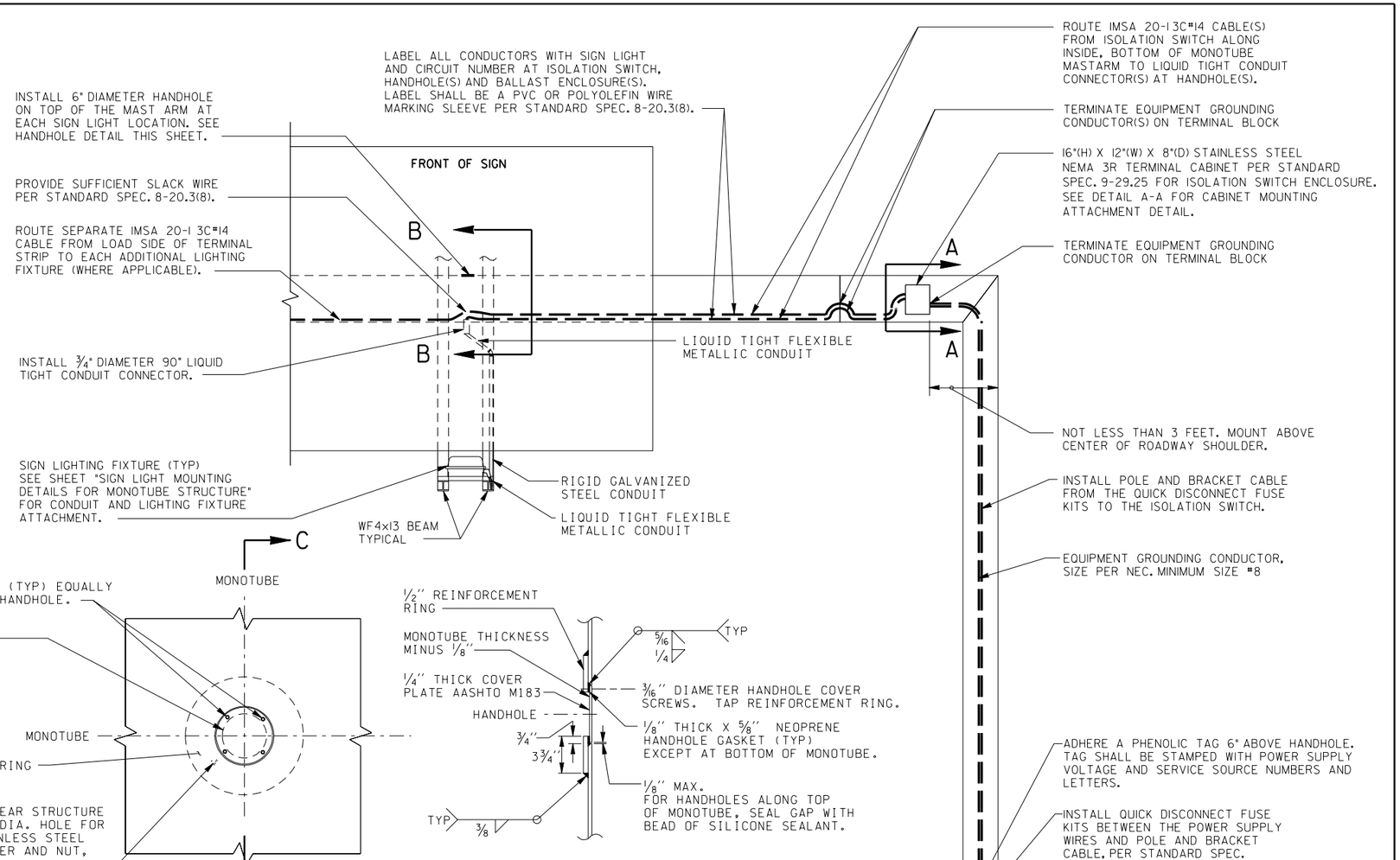

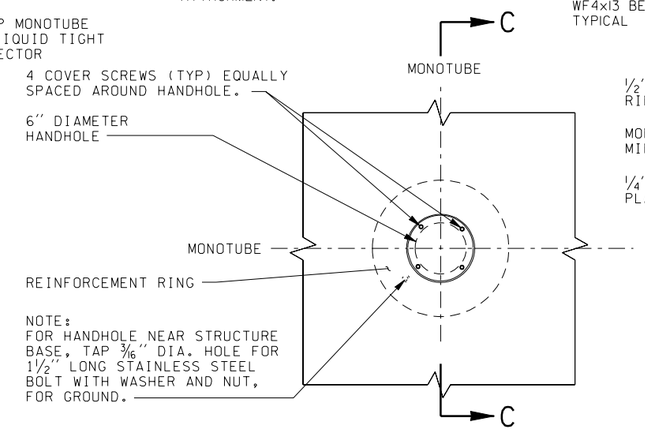

HANDHOLE DETAIL
NTS

SECTION C-C
NTS

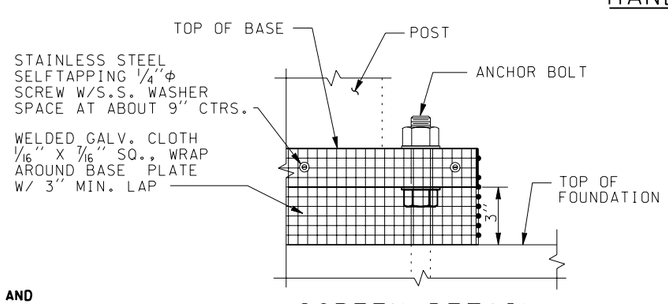

SCREEN DETAIL

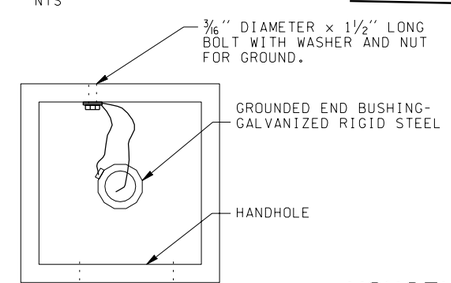

SECTION D-D
NTS

MONOTUBE SIGN STRUCTURE WIRING DETAILS
NTS

GENERAL NOTES:

1. THE DETAILS SHOW TYPICAL WIRING INSTALLATION ON MONOTUBE SIGN STRUCTURE.
2. SEE ALSO SHEET "SIGN LIGHT MOUNTING DETAILS FOR MONOTUBE STRUCTURE" FOR CONDUIT, ROUTING, HARDWARE, AND LIGHTING FIXTURE DETAILS.
3. SEE PLAN SHEETS FOR ORIENTATION OF SIGN STRUCTURE.
4. REFER TO SIGN STRUCTURE SHEETS FOR CONSTRUCTION DETAILS.
5. SEE ELECTRICAL SHEETS FOR CONTINUATION OF POWER CIRCUIT.
6. ALL NUTS, BOLTS, WASHERS, AND OTHER HARDWARE SHALL BE STAINLESS STEEL.
7. ALL HOLES SHALL BE DRILLED AND TAPPED.
8. THE CONDUCTORS IN THE IMSA 20-1 3C #14 CABLE SHALL BE BLACK, RED AND WHITE. THE WHITE CONDUCTOR SHALL BE PERMANENTLY IDENTIFIED AS AN EQUIPMENT GROUNDING CONDUCTOR PER THE NEC.
9. TYPICAL VIEW SHOWN. VERIFY POWER SOURCE LOCATION. VERIFY QUANTITIES. LOCATION OF SIGNS AND SIGN STRUCTURE FIXTURES IN CONTRACT PLANS.

FILE NAME	S:\414126\Electrical\MASTER_FILES\DETAILS V8\signlighters_e.dgn						
TIME	06:53:42 AM	ADDED NOTE 9	9-10-02	JH	REGION NO. 10	STATE WASH	FED.AID PROJ.NO.
DATE	10/29/2003	ADDED SCREEN DETAIL, SECTION D-D, NOTE 8,	5-15-02	JH			
		EQUIP. GRD. CONDUCTOR #8					
DESIGNED BY		ADDED PULL GRIP TO DETAIL	1-08-01	JH	JOB NUMBER		
ENTERED BY		GEN. NOTES, BUSHING, LOCKNUT	9-12-00	JH			
CHECKED BY		STAN. PLAN # CHANGED- TEXT	2-10-99	JH	CONTRACT NO.		LOCATION NO.
PROJ. ENGR.		DELETE WORD CANTILEVER	5-12-98	JH			
REGIONAL ADM.		REVISION	DATE	BY			

DATE
P.E. STAMP BOX

DATE
P.E. STAMP BOX

Washington State Department of Transportation

ENGLISH

MONOTUBE SIGN STRUCTURE WIRING DETAILS

SHEET 2 OF 2

PLOT2

3.02E

SHEET OF SHEETS

GENERAL NOTES:

1. USE THIS RETROFIT DETAIL SHEET ONLY WHEN THE FOLLOWING CONDITIONS APPLY: EXISTING WF BEAM SIGN LIGHTER BRACKETS ARE TO BE REUSED FOR A NEW SIGN LIGHTER FIXTURE. THE SPAN BETWEEN THE EXISTING SIGN LIGHTER BRACKETS IS TOO WIDE TO ATTACH THE NEW SIGN LIGHTER MOUNTING PLATE AND FIXTURE.

2. ALL NUTS, BOLTS, WASHERS, AND OTHER HARDWARE SHALL BE STAINLESS STEEL.

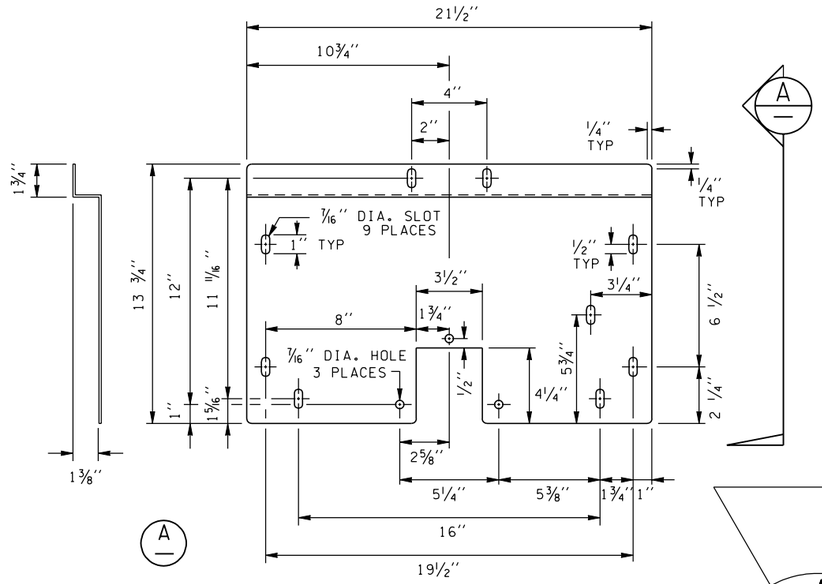

MOUNTING PLATE DETAIL

ITEM AVAILABLE FROM FIXTURE MANUFACTURER.
MATERIAL IS GALV. 10 GAGE STEEL PLATE.

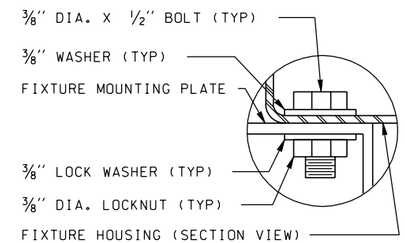

DETAIL A

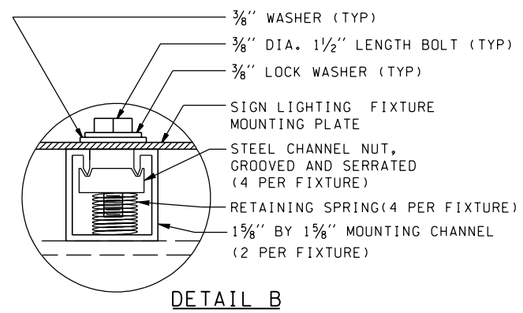

DETAIL B

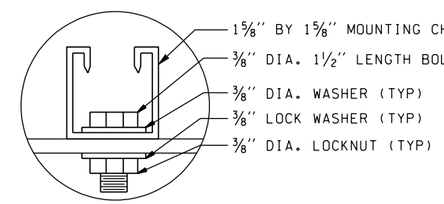

SECTION C

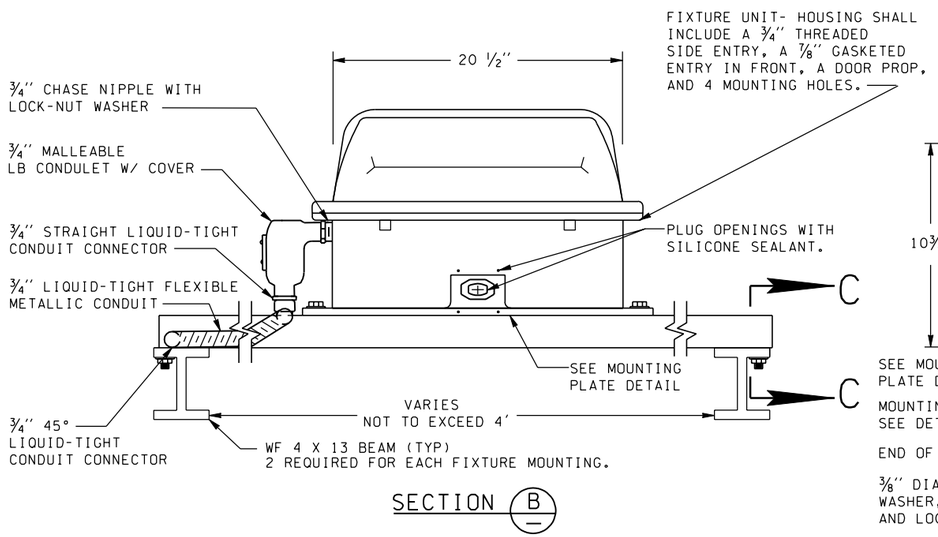

SECTION B

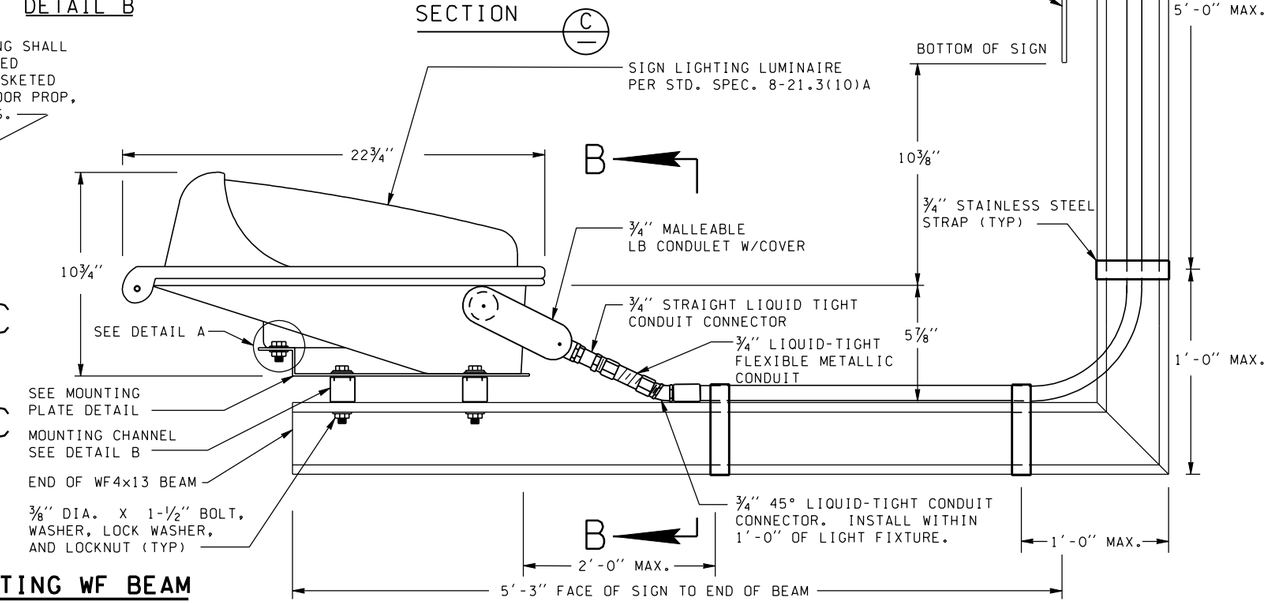

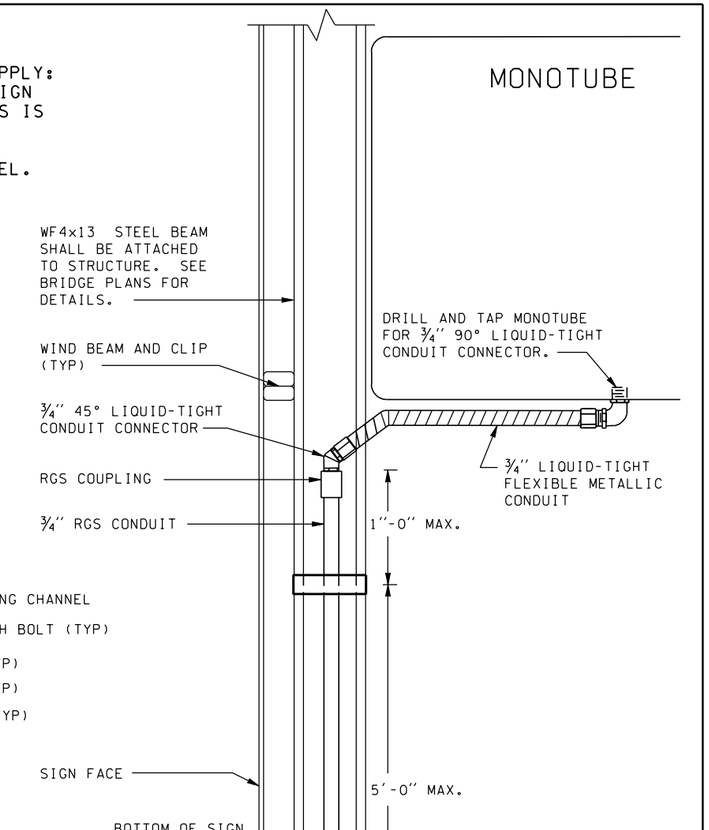

SIGN LIGHT MOUNTING DETAILS WITH EXISTING WF BEAM

(NOT TO SCALE)

FILE NAME	s:\414126\Electrical\MASTER_FILES\DETAILS\signlighters_e.dgn						
TIME	10:53:52 AM				REGION NO.	STATE	FED.AID PROJ.NO.
DATE	09/11/2002				10	WASH	
DESIGNED BY					JOB NUMBER		
ENTERED BY							
CHECKED BY					CONTRACT NO.		LOCATION NO.
PROJ. ENGR.		NEW WF RETROFIT DETAIL	1-8-01	JH			
REGIONAL ADM.		REVISION	DATE	BY			

P.E. STAMP BOX DATE

P.E. STAMP BOX DATE

Washington State Department of Transportation

ENGLISH

RETROFIT SIGN LIGHT MOUNTING DETAILS FOR MONOTUBE STRUCTURE

WITH EXISTING WF BEAM

PLOT22

3.20E

SHEET OF SHEETS

GENERAL NOTES:

1. ALL NUTS, BOLTS, WASHERS, AND OTHER HARDWARE SHALL BE STAINLESS STEEL.
2. IF THE SIGN STRUCTURE INCLUDES A MAINTENANCE WALKWAY, THE LUMINAIRE MOUNTING PLATE SHALL BE BOLTED TO THE WALKWAY GRATING.
3. SEE ALSO THE SHEET FOR "CONDUIT ROUTING DETAILS FOR CONDUIT, ROUTING, HARDWARE, AND OTHER DETAILS.

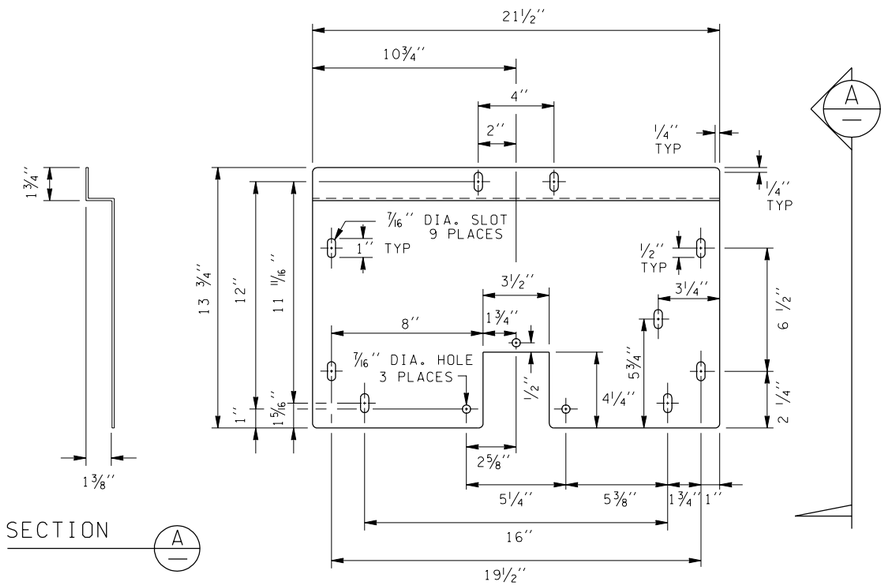

SIGN LIGHTING FIXTURE MOUNTING PLATE DETAIL

ITEM AVAILABLE FROM FIXTURE MANUFACTURER.
MATERIAL IS GALV. 10 GAGE STEEL PLATE.

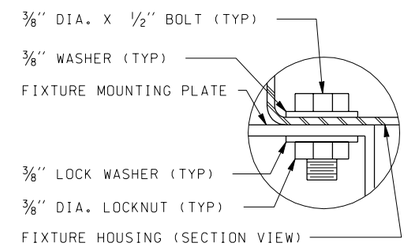

DETAIL A

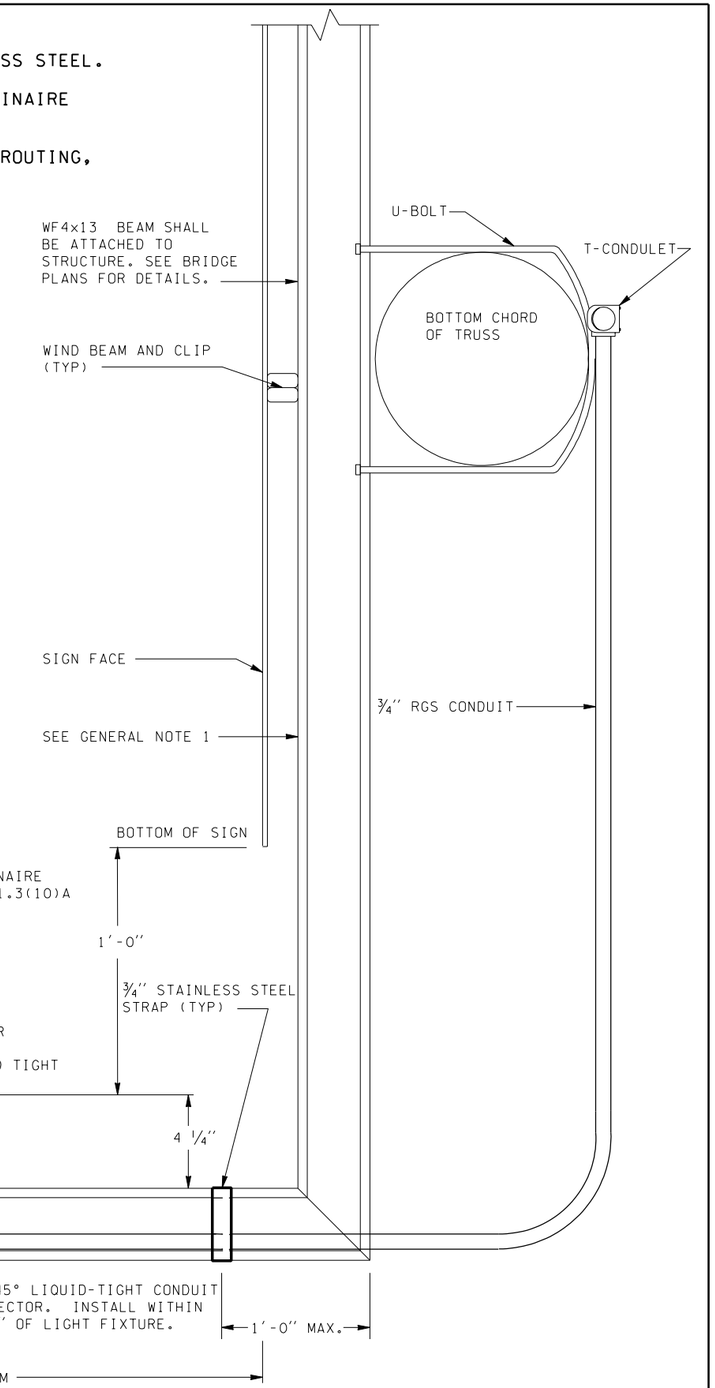

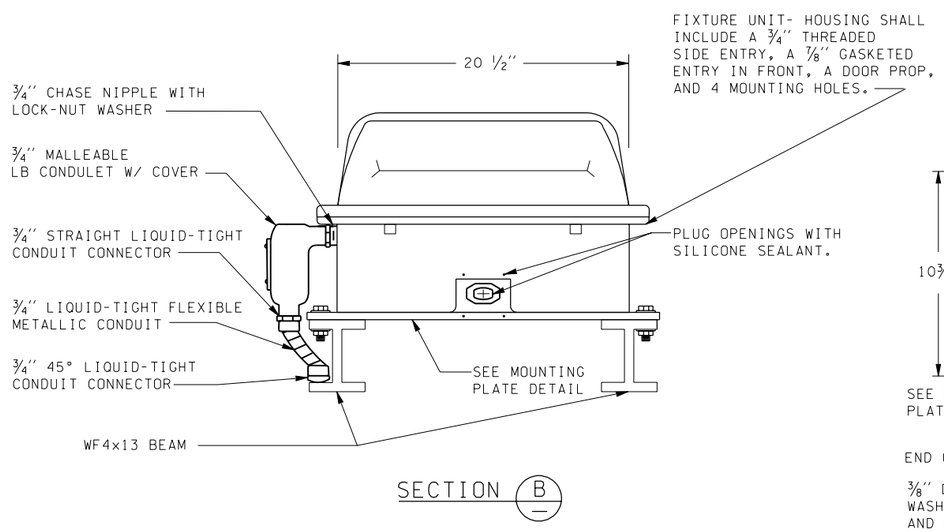

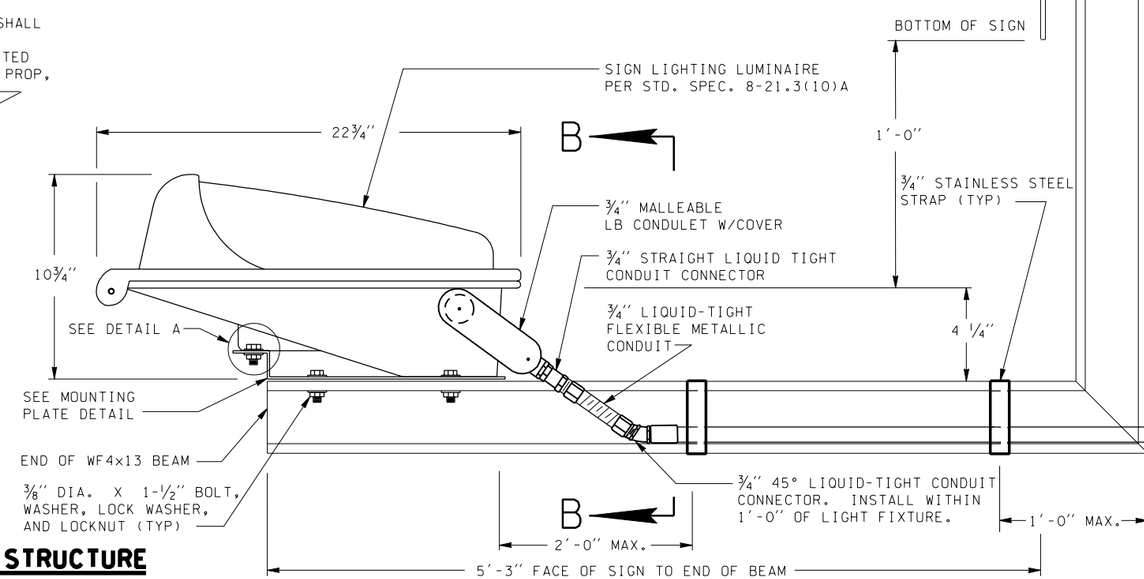

SIGN LIGHT MOUNTING DETAILS FOR TRUSS STRUCTURE

(NOT TO SCALE)

FILE NAME	S:\414126\Electrical\MASTER_FILES\DETAILS V8\signlighters_e.dgn			REGION NO.	STATE	FED.AID PROJ.NO.
TIME	07:05:27 AM			10	WASH	
DATE	02/10/2004			JOB NUMBER		
DESIGNED BY						
ENTERED BY	¾" RGS CONDUIT NOTE	3-1-01	JH			
CHECKED BY	GENERAL NOTE CHANGE	1-08-01	JH	CONTRACT NO.		LOCATION NO.
PROJ. ENGR.	REMOVED S.S. STRAP, DIM. CHNG.	12-12-00	JH			
REGIONAL ADM.	REVISION	DATE	BY			

P.E. STAMP BOX — DATE

P.E. STAMP BOX — DATE

Washington State Department of Transportation

ENGLISH

SIGN LIGHT MOUNTING DETAILS FOR TRUSS STRUCTURE

SHEET 1 OF 2

PLOT11

4.01E

SHEET OF SHEETS

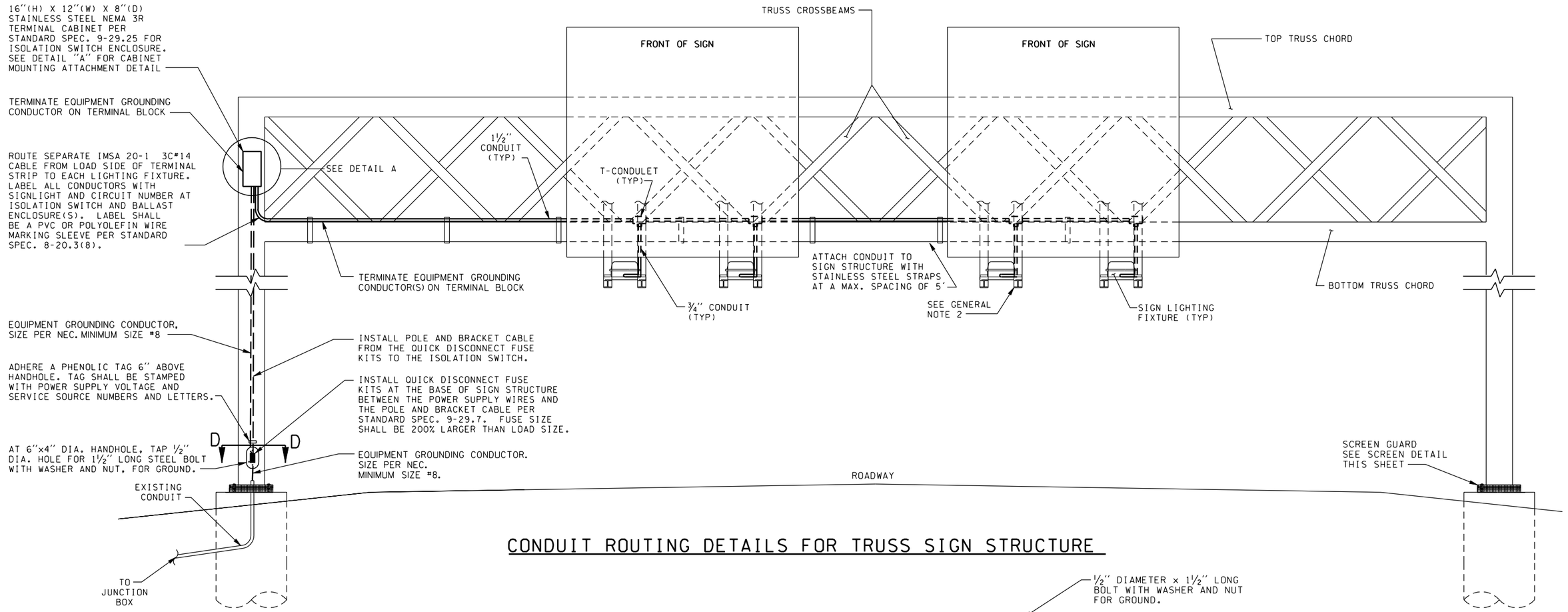

CONDUIT ROUTING DETAILS FOR TRUSS SIGN STRUCTURE

GENERAL NOTES

1. THE DETAILS SHOW TYPICAL WIRING INSTALLATION ON TRUSS SIGN STRUCTURE.
2. SEE ALSO "SIGNLIGHT MOUNTING DETAILS FOR TRUSS STRUCTURE" FOR CONDUIT, ROUTING, HARDWARE, AND LIGHTING FIXTURE DETAILS.
3. SEE PLAN SHEETS FOR ORIENTATION OF SIGN STRUCTURE.
4. REFER TO SIGN STRUCTURE SHEETS FOR CONSTRUCTION DETAILS.
5. SEE ELECTRICAL SHEETS FOR CONTINUATION OF POWER CIRCUIT.
6. ALL NUTS, BOLTS, WASHERS, AND OTHER HARDWARE SHALL BE STAINLESS STEEL.
7. ALL HOLES SHALL BE DRILLED AND TAPPED.
8. THE CONDUCTORS IN THE IMSA 20-1 3C #14 CABLE SHALL BE BLACK, RED AND WHITE. THE WHITE CONDUCTOR SHALL BE PERMANENTLY IDENTIFIED AS AN EQUIPMENT GROUNDING CONDUCTOR PER THE NEC.
9. TYPICAL VIEW SHOWN. VERIFY POWER SOURCE LOCATION. VERIFY QUANTITIES, LOCATION OF SIGNS AND SIGN STRUCTURE FIXTURE IN CONTRACT PLANS.

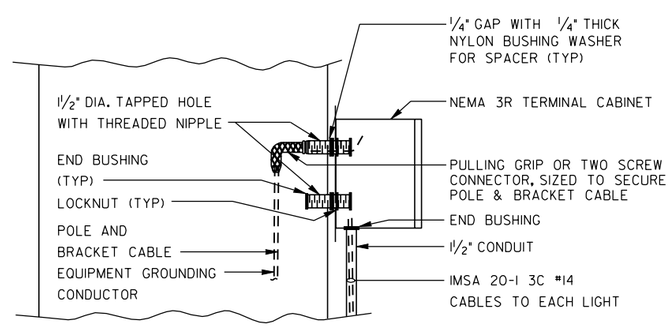

DETAIL A
NTS

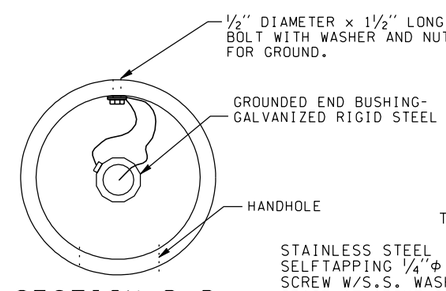

SECTION D-D
NTS

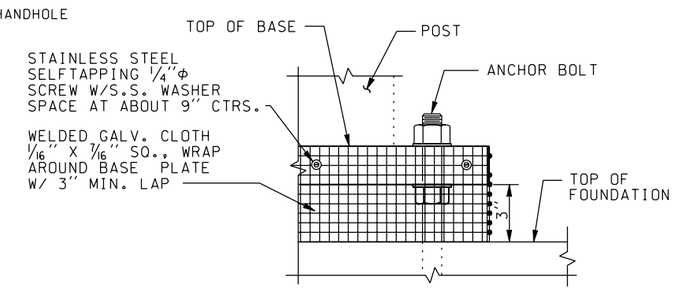

SCREEN DETAIL

FILE NAME s:\414126\Electrical\MASTER_FILES\DETAILS\signlighters_e.dgn				REGION NO. 10	STATE WASH	FED.AID PROJ.NO.
TIME 10:52:39 AM						
DATE 09/11/2002						
DESIGNED BY	ADDED SCREEN DETAIL, SECTION D-D, NOTE 8,	5-15-02	JH	JOB NUMBER		
ENTERED BY	EQUIP. GRD. CONDUCTOR #8					
CHECKED BY	HANDHOLE/NEMA LOCATION	1-8-01	JH	CONTRACT NO.		LOCATION NO.
PROJ. ENGR.	SIGN MOVE TO FRONT OF TRUSS	12-12-00	JH			
REGIONAL ADM.	REVISION	DATE	BY			

DATE
P.E. STAMP BOX

DATE
P.E. STAMP BOX

Washington State Department of Transportation

ENGLISH
TRUSS SIGN STRUCTURE WIRING

SHEET 2 OF 2

PLOT12
4.02E
SHEET OF SHEETS

GENERAL NOTES:

1. USE THIS RETROFIT DETAIL SHEET ONLY WHEN THE FOLLOWING CONDITIONS APPLY: EXISTING 3⅂ 2.33 Z-BAR SIGN LIGHTER BRACKETS ARE TO BE REUSED FOR A NEW SIGN LIGHTER FIXTURE. THE SPAN BETWEEN THE EXISTING SIGN LIGHTER BRACKETS IS TOO WIDE TO ATTACH THE NEW SIGN LIGHTER MOUNTING PLATE AND FIXTURE. EXISTING Z-BAR BRACKETS HAVE ALUMINUM PLATE CORNER REINFORCEMENTS.

2. ALL NUTS, BOLTS, WASHERS, AND OTHER HARDWARE SHALL BE STAINLESS STEEL.

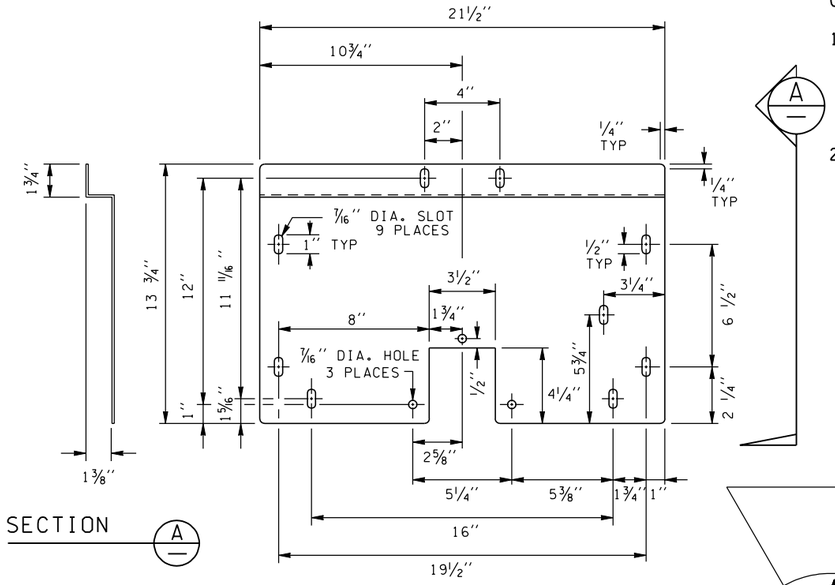

SECTION A

MOUNTING PLATE DETAIL

ITEM AVAILABLE FROM FIXTURE MANUFACTURER.
MATERIAL IS GALV. 10 GAGE STEEL PLATE.

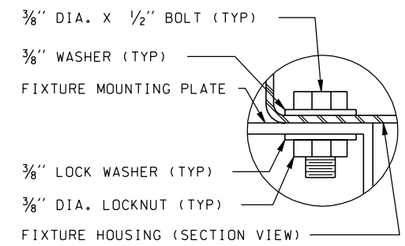

DETAIL A

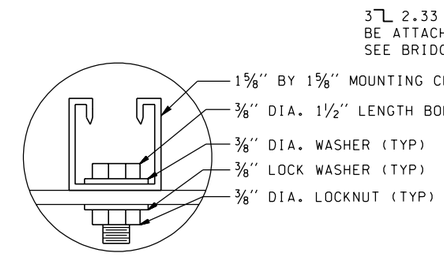

SECTION C

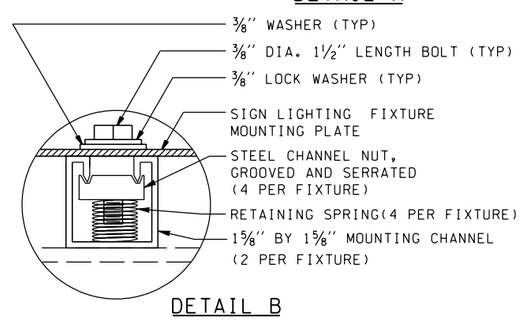

DETAIL B

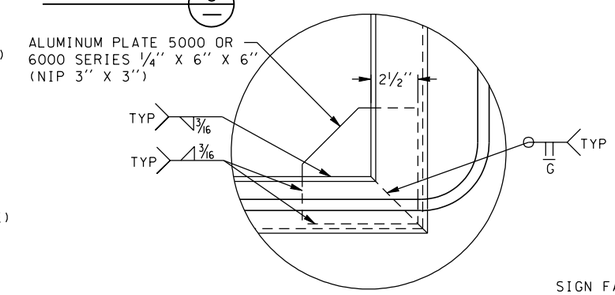

Z-BAR CORNER DETAIL

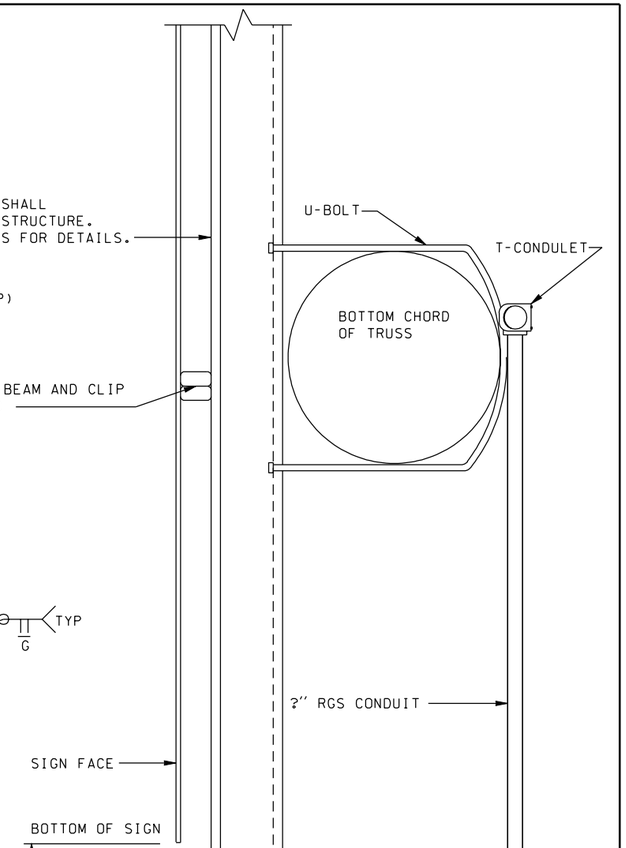

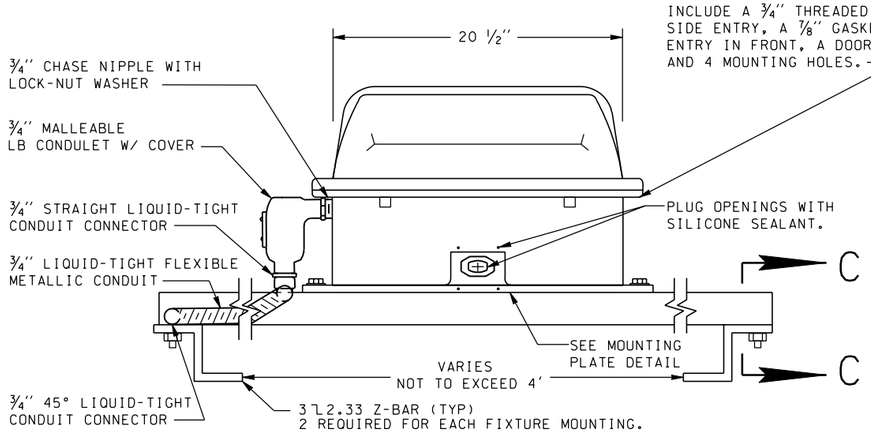

SECTION B

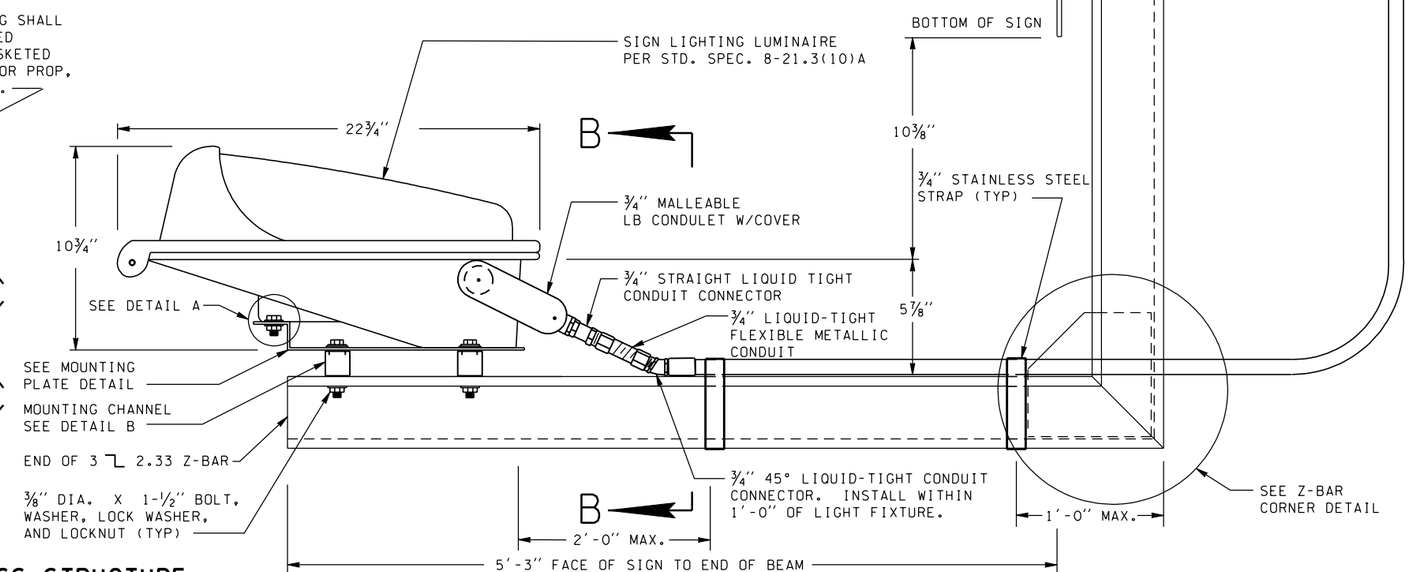

RETROFIT SIGN LIGHT MOUNTING DETAILS FOR TRUSS STRUCTURE

FILE NAME	s:\414126\Electrical\MASTER_FILES\DETAILS\signlighters_e.dgn					
TIME	10:53:17 AM					
DATE	09/11/2002					
DESIGNED BY						
ENTERED BY		¾'' RGS CONDUIT NOTE	3-1-01	JH		
CHECKED BY		MOVE WF BEAM TO NEW DETAIL	1-10-01	JH		
PROJ. ENGR.		CONDUIT ON TOP OF Z BAR	1-3-01	JH		
REGIONAL ADM.		REVISION	DATE	BY		

REGION NO.	STATE	FED.AID PROJ.NO.
10	WASH	
JOB NUMBER		
CONTRACT NO.		LOCATION NO.

P.E. STAMP BOX DATE

P.E. STAMP BOX DATE

Washington State Department of Transportation

ENGLISH

RETROFIT SIGN LIGHT MOUNTING DETAILS FOR TRUSS STRUCTURE

WITH EXISTING Z-BAR

PLOT21

4.20E

SHEET OF SHEETS

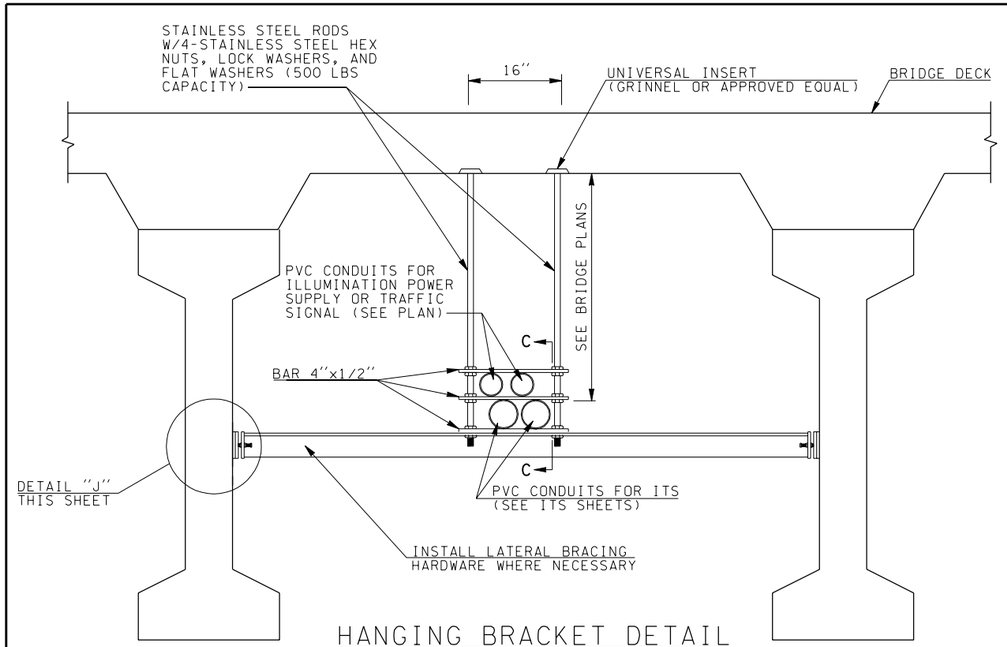

HANGING BRACKET DETAIL
(FOR PVC CONDUIT)

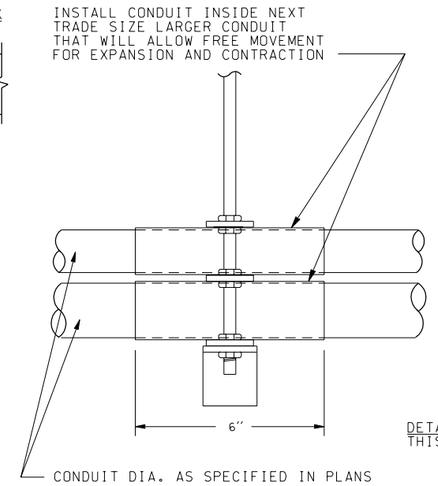

SECTION C

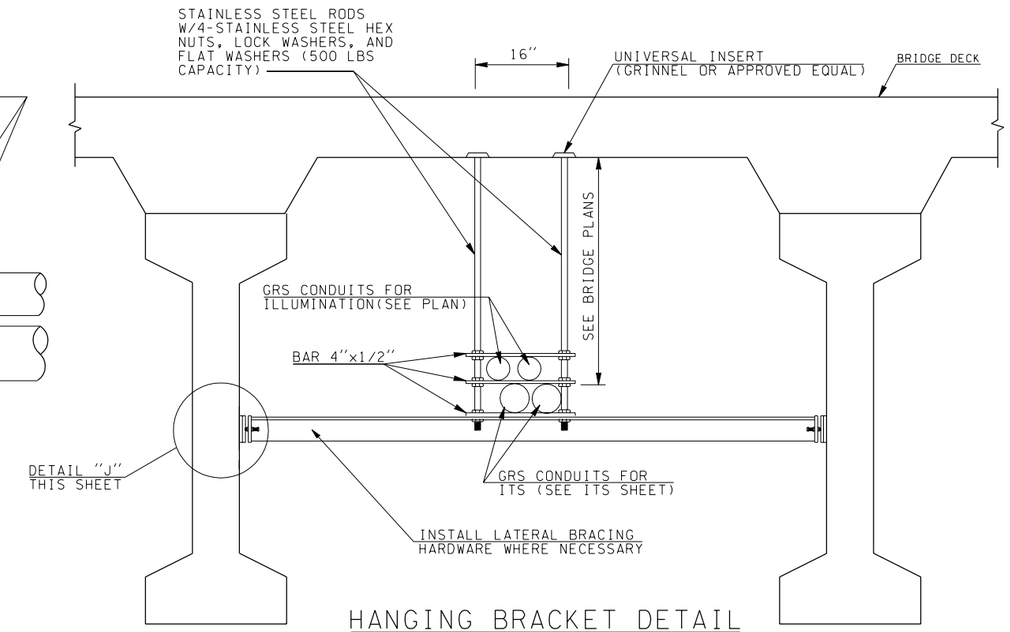

HANGING BRACKET DETAIL
(FOR GRS CONDUIT)

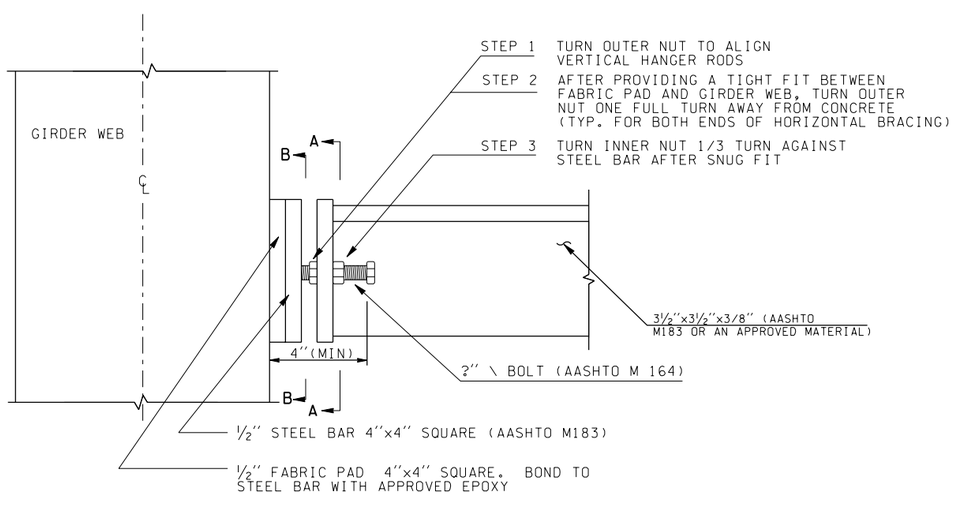

DETAIL "J"

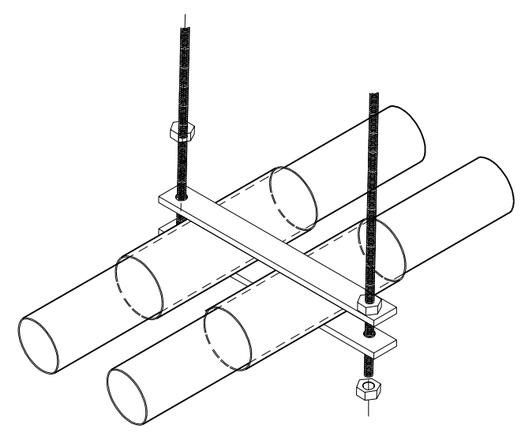

CONDUIT HANGER DETAILS
(TYPICAL)

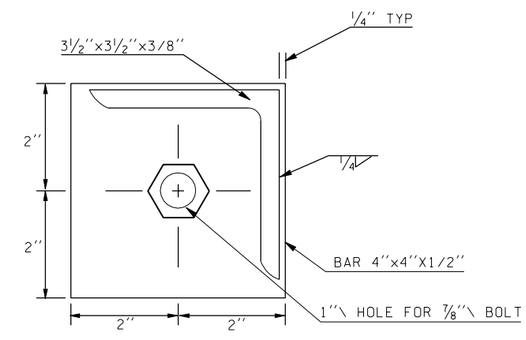

SECTION A

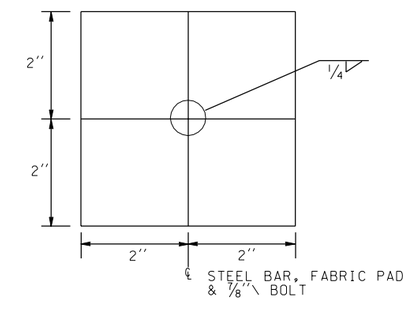

SECTION B

FILE NAME	N:\wsdot\Regions\Northwest\Traffic\ElectricalDesign\master\dgn&zip\UNISTRUT_E.dgn						
TIME	04:21:02 PM				REGION NO.	STATE	FED.AID PROJ.NO.
DATE	08/13/2003				10	WASH	
DESIGNED BY		PVC ADDED, SEC 'C' DET. ADDED	7/17/03	JH	JOB NUMBER		
ENTERED BY		NEW SHEET PLACEMENT	4/15/03	JH			
CHECKED BY		REMOVED UNISTRUT DET.	11-15-00	JH	CONTRACT NO.		LOCATION NO.
PROJ. ENGR.		FIXED ENGLISH UNITS	12-9-98	EM			
REGIONAL ADM.		REVISION	DATE	BY			

P.E. STAMP BOX DATE

P.E. STAMP BOX DATE

Washington State Department of Transportation

ILLUMINATION DETAILS

ENGLISH

PLOT2

5.01E

SHEET OF SHEETS

PLOT12 06/18/2008:\414126\Electrical\Web\dgn\illum_e.DGN MbuthN

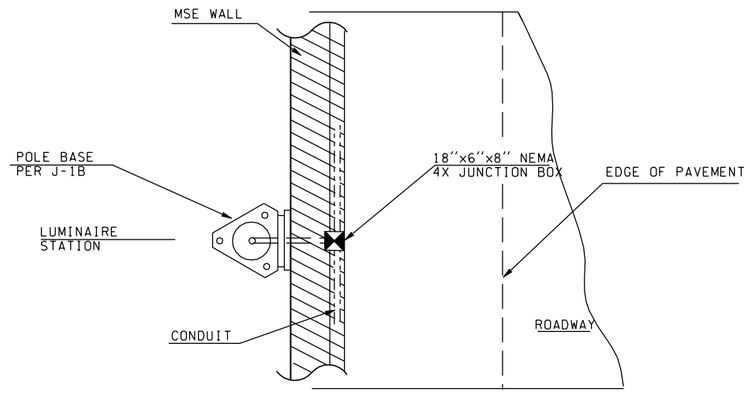

PLAN

NOTES:

1. SEE BRIDGE PLANS FOR WALL CONSTRUCTION AND POLE BASE ATTACHMENT DETAILS.
2. FOR BRACKET ANCHORAGE DETAILS SEE SHEET ED9A.
3. CHECK WALL FOR LUMINAIRE LOADINGS.

DETAIL ''E''

LUMINAIRES ON BARRIER-MOUNTED ON STRUCTURAL EARTH WALL (SEW)

LUM #45	-	SHEET E23 (WALL 11)
LUM #95,#97,#117,#118	-	SHEET E22 (WALL 10)
LUM #100	-	SHEET E23 (WALL 11)
LUM #112	-	SHEET E23 (WALL 10)
LUM #103	-	SHEET E23 (WALL 3)
LUM #151	-	SHEET E29 (WALL 17)
LUM #156	-	SHEET E31(WALL 19)
LUM #152	-	SHEET E30 (WALL 17)
LUM #158,#161,#172	-	SHEET E31 (WALL 25)

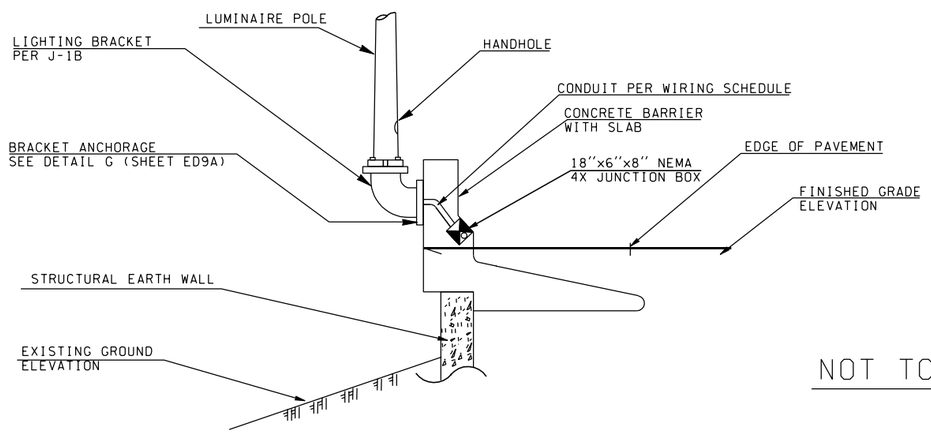

ELEVATION PROFILE

NOT TO SCALE

					REGION NO.	STATE	FED.AID PROJ.NO.	
DESIGNED BY					10	WASH		
ENTERED BY					JOB NUMBER			
CHECKED BY								
PROJ. ENGR.								
REGIONAL ADM.		2/2/99	FIXED TEXT	JH	CONTRACT NO.			
	DATE	DATE	REVISION	BY				

ENVIRONMENTAL AND ENGINEERING SERVICE CENTER

Washington State Department of Transportation

ENGLISH

ILLUMINATION DETAILS

502E

SHEET OF SHEETS

PLOT11 06/18/2008:\414126\Electrical\Web\dgn\illum_e.DGN MbuthN

NOTES:

1. SEE BRIDGE PLANS FOR WALL CONSTRUCTION AND POLE BASE ATTACHMENT DETAILS.
2. FOR BRACKET ANCHORAGE DETAILS SEE SHEET ED9B.
3. CHECK WALL FOR LUMINAIRE LOADINGS AFTER PROFILE HAS BEEN DETERMINED.
4. JUNCTION BOXES SHALL BE INSTALLED AS CLOSE AS POSSIBLE TO THE FACE OF THE TRAFFIC BARRIER.

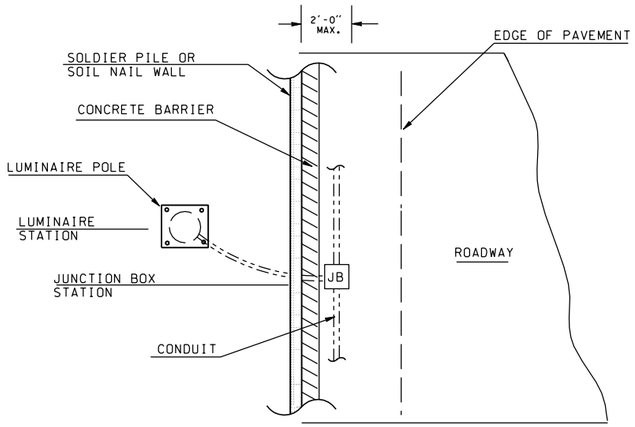

PLAN

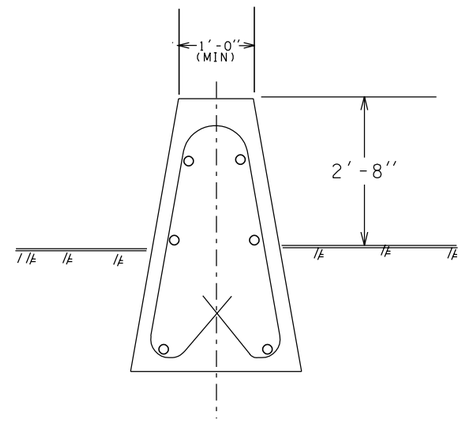

TYPICAL SECTION

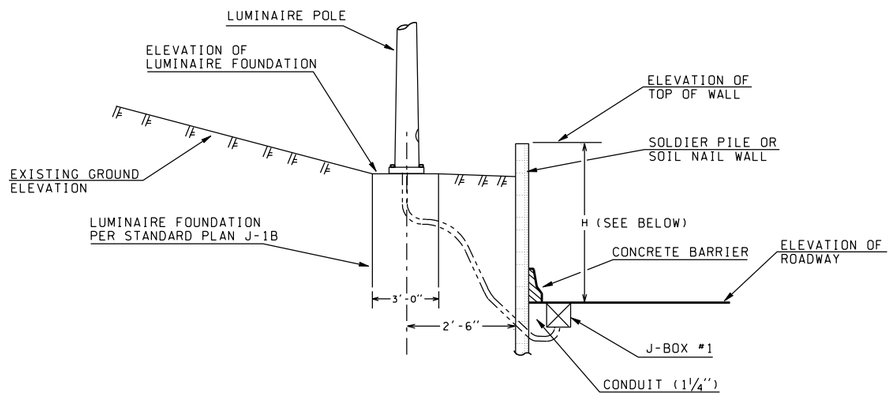

ELEVATION PROFILE

DETAIL "A"

LUMINAIRES-MOUNTED IN GRADE BEHIND WALL
LUM #81 (SOLDIER PILE WALL) H=5' - SHEET E26

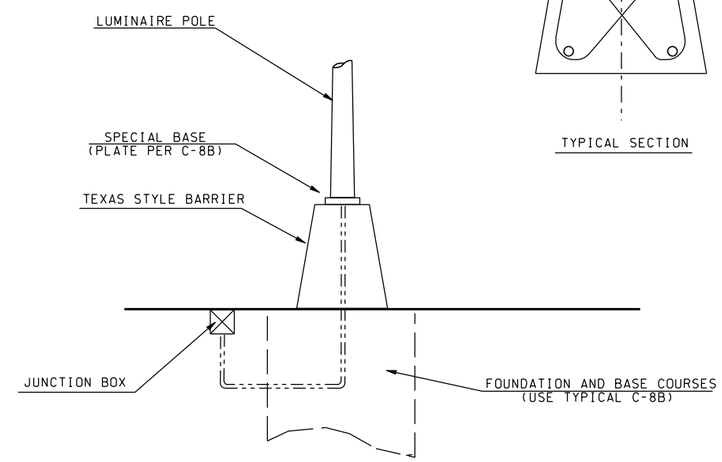

DETAIL "B"

LUMINAIRES-MOUNTED ON TOP OF MEDIAN BARRIER
LUM #113,#114,#115 - SHEET E23
LUM #116 - SHEET E22

NOT TO SCALE

					REGION NO.	STATE	FED.AID PROJ.NO.	ENVIRONMENTAL AND ENGINEERING SERVICE CENTER	Washington State Department of Transportation	ENGLISH	503E
DESIGNED BY					10	WASH					SHEET
ENTERED BY					JOB NUMBER						OF
CHECKED BY											SHEETS
PROJ. ENGR.											
REGIONAL ADM.		2/2/99	FIXED TEXT	JH	CONTRACT NO.					ILLUMINATION DETAILS	
	DATE	DATE	REVISION	BY							

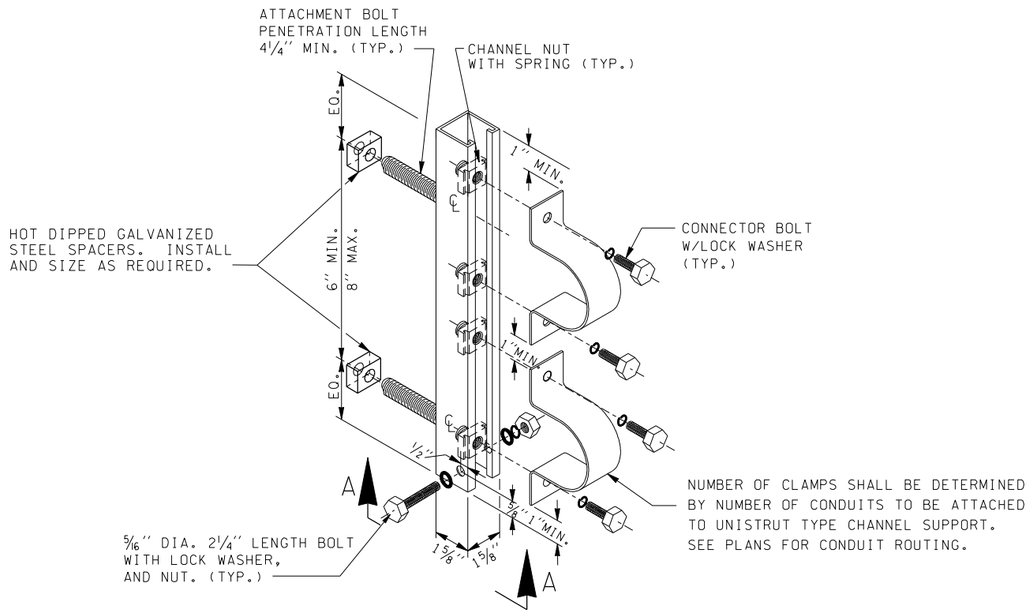

UNISTRUT TYPE CHANNEL SUPPORT DETAIL

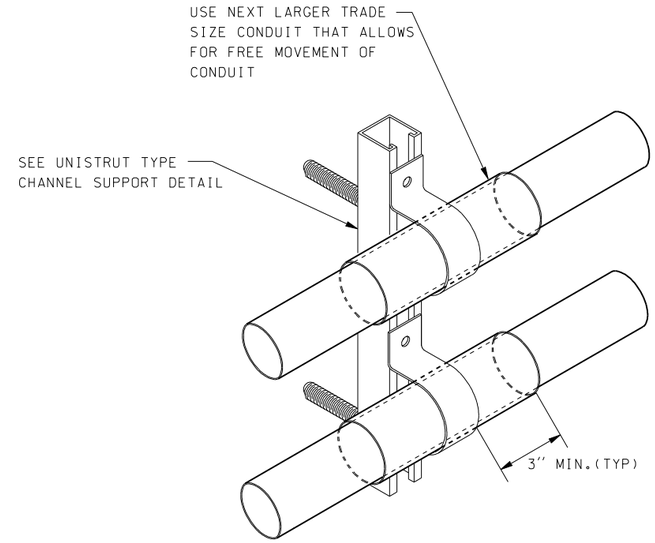

PVC CONDUIT SUPPORT DETAIL

(FOR UTILITY COMPANY USE - ONLY ALLOWED IN RARE INSTANCES)

NOTES

MOUNTING HARDWARE DETAILS ARE PROVIDED FOR ILLUSTRATIVE PURPOSES ONLY. THE CONTRACTOR MAY PROPOSE GEOMETRIC ATTACHMENT MODIFICATIONS, SUBJECT TO APPROVAL BY THE ENGINEER.

DRILLING THROUGH REINFORCING STEEL IS NOT ALLOWED. IF STEEL IS HIT WHILE DRILLING, THE LOCATION SHALL BE MOVED AND THE ABANDONED HOLE FILLED WITH GROUT CONFORMING TO SECTION 6-02.3(20). THERE SHALL BE A MINIMUM 3″ EDGE DISTANCE TO THE CENTERLINE OF ANCHOR HOLES IN CONCRETE. MOUNT THE UNISTRUT TYPE SUPPORT USING AN APPROVED RESIN BONDED ANCHOR SYSTEM, INSTALLED PER MANUFACTURERS RECOMMENDATION IN DRY CONDITIONS. RESIN BONDED ANCHORS SHALL BE STAINLESS STEEL AND SHALL BE A MINIMUM OF ⅜″ DIA. UNLESS THE PLANS REQUIRE LARGER ANCHORS. (EXPANSION ANCHORS ARE NOT ALLOWED.)

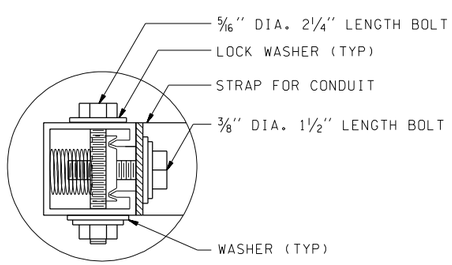

DETAIL A

RIGID GALVANIZED STEEL CONDUIT		
NOMINAL TRADE SIZE IN.	CONDUIT STRAP OUTSIDE	DIAMETER INSIDE
½	0.840	0.632
¾	1.050	0.836
1	1.315	1.063
1¼	1.660	1.394
1½	1.900	1.624
2	2.375	2.083
2½	2.875	2.489
3	3.500	3.090
3½	4.000	3.570
4	4.500	4.050
5	5.563	5.073
6	6.625	6.093

SCHEDULE 40 PVC		
NOMINAL TRADE SIZE IN.	CONDUIT STRAP OUTSIDE	DIAMETER INSIDE
½	0.840	0.622
¾	1.050	0.824
1	1.315	1.049
1¼	1.660	1.380
1½	1.900	1.610
2	2.375	2.067
2½	2.875	2.469
3	3.500	3.068
3½	4.000	3.548
4	4.500	4.026
5	5.563	5.047
6	6.625	6.065

SCHEDULE 80 PVC		
NOMINAL TRADE SIZE IN.	CONDUIT STRAP OUTSIDE	DIAMETER INSIDE
½	0.840	0.546
¾	1.050	0.742
1	1.315	0.957
1¼	1.660	1.278
1½	1.900	1.500
2	2.375	1.939
2½	2.875	2.323
3	3.500	2.900
4	4.500	3.826
5	5.563	4.813

FILE NAME	S:\414126\Electrical\MASTER_FILES\DETAILS V8\UNISTRUT_E.dgn					
TIME	12:40:09 PM			REGION NO.	STATE	FED.AID PROJ.NO.
DATE	09/23/2004	ATTACHMENT BOLT SPACING MIN/MAX	2-6-02	JH	10	WASH
		"NOTES" REVISED.	6-13-01	JH	JOB NUMBER	
DESIGNED BY		ANCHOR BOLT "PENETRATION" LENGTH	6-7-01	JH		
ENTERED BY		ADD DETAIL A	2-6-01	JH		
CHECKED BY		ADD BOLTS AT ENDS/SPEC. SECTION CHNG.	8-21-00	JH	CONTRACT NO.	LOCATION NO.
PROJ. ENGR.		NEW SHT DESIGNATION AND *				
REGIONAL ADM.		REVISION	DATE	BY		

DATE
P.E. STAMP BOX

DATE
P.E. STAMP BOX

Washington State Department of Transportation

ENGLISH

UNISTRUT DETAILS

PLOT1

5.04E

SHEET OF SHEETS

PLOT14 06/18/2008:\414126\Electrical\Web\dgn\illum_e.DGN MbuthN

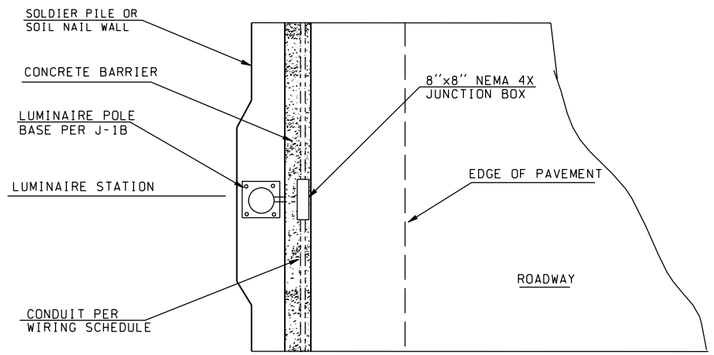

SECTION A-A

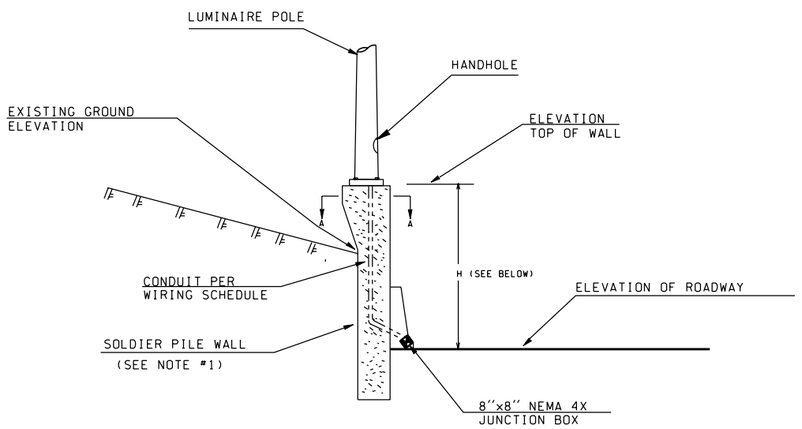

DETAIL ''D''

LUMINAIRES-MOUNTED ON SOLDIER PILE WALL (SPW)

NOTES:

1. SEE BRIDGE PLANS FOR WALL CONSTRUCTION AND POLE BASE ATTACHMENT DETAILS.
2. FOR BRACKET ANCHORAGE DETAILS SEE SHEET ED9B.
3. JUNCTION BOXES SHALL BE INSTALLED AS CLOSE AS POSSIBLE TO THE FACE OF THE TRAFFIC BARRIER.

NOT TO SCALE

					REGION NO.	STATE	FED.AID PROJ.NO.	ENVIRONMENTAL AND ENGINEERING SERVICE CENTER	Washington State Department of Transportation	ENGLISH	5.05E
					10	WASH					
DESIGNED BY					JOB NUMBER						
ENTERED BY											
CHECKED BY											
PROJ. ENGR.											
REGIONAL ADM.		2/2/99	FIXED TEXT	JH	CONTRACT NO.					ILLUMINATION DETAILS	SHEET OF SHEETS
	DATE	DATE	REVISION	BY							

PLOT16 06/18/2008:\414126\Electrical\Web\dgn\illum_e.DGN MbuthN

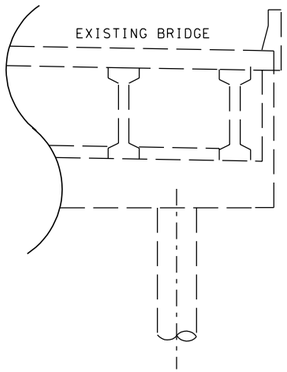

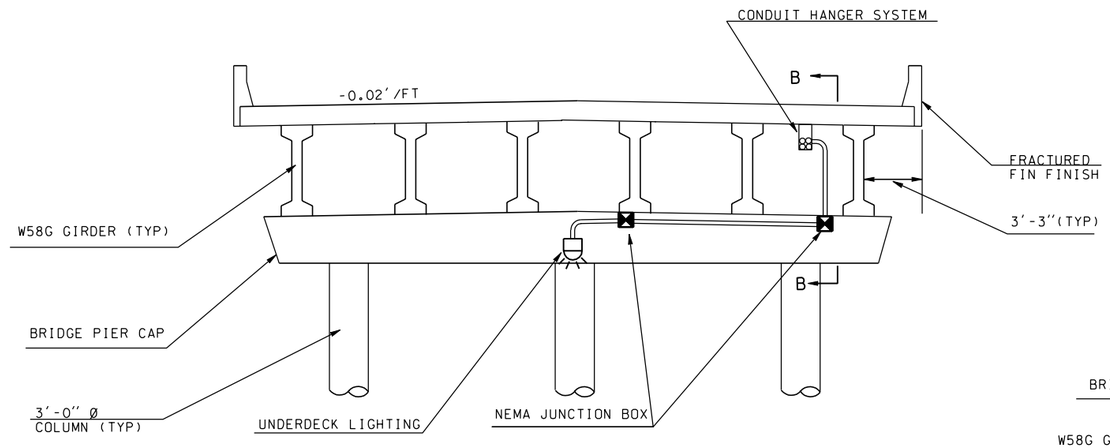

SECTION A-A

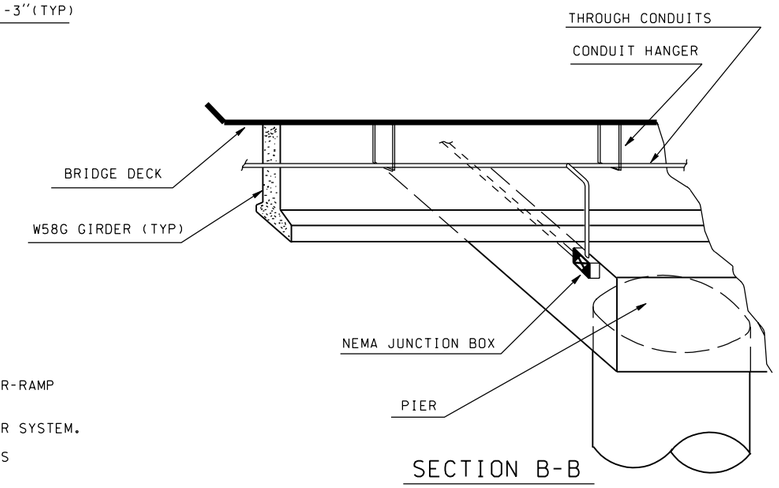

SECTION B-B

GENERAL NOTES

1. INSTALL A TYPE 2 JUNCTION BOX AT THE EDGE OF PAVEMENT OF EACH END OF THE BR-RAMP BRIDGE STRUCTURE.
2. EXTEND CONDUIT, ENTERING THE BRIDGE STRUCTURE THROUGH PIER 1, TO THE HANGER SYSTEM.
3. INSTALL LUMINAIRES ON THE BRIDGE CAPS OF PIER 2 AND PIER 3 AND RUN CONDUITS THROUGH NEMA 4X JUNCTION BOXES TO THE LUMINAIRES.
4. END CAP ALL UNUSED CONDUITS IN THE JUNCTION BOX AT EACH END OF THE BRIDGE STRUCTURE.

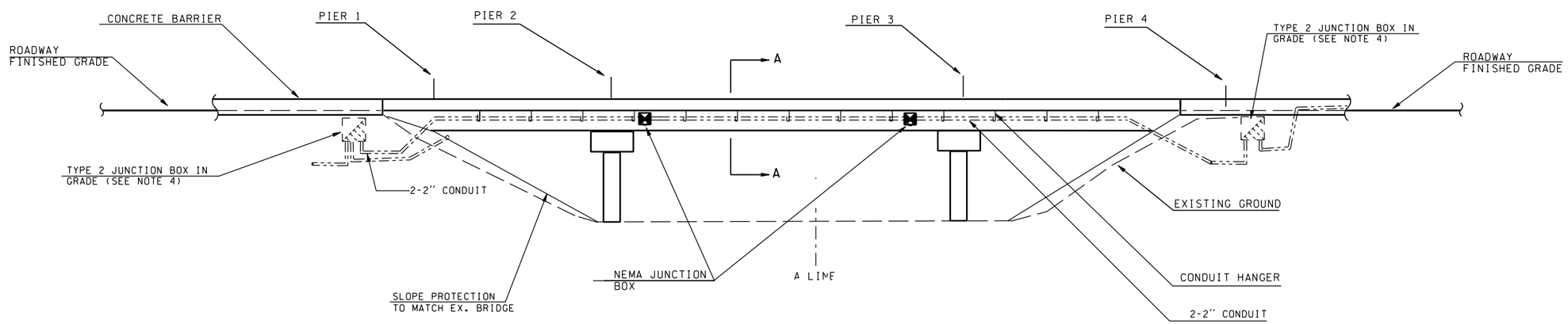

DETAIL C

(UNDERDECK STRUCTURE MOUNTED LUMINAIRE)

NOT TO SCALE

					REGION NO.	STATE	FED.AID PROJ.NO.	ENVIRONMENTAL AND ENGINEERING SERVICE CENTER	Washington State Department of Transportation	ENGLISH	5.06E
					10	WASH					
DESIGNED BY					JOB NUMBER						SHEET
ENTERED BY											OF
CHECKED BY											SHEETS
PROJ. ENGR.											
REGIONAL ADM.		5/28/99	DELETED TEXT (SEE SHEET..)	JH	CONTRACT NO.					ILLUMINATION DETAILS	
	DATE	DATE	REVISION	BY							

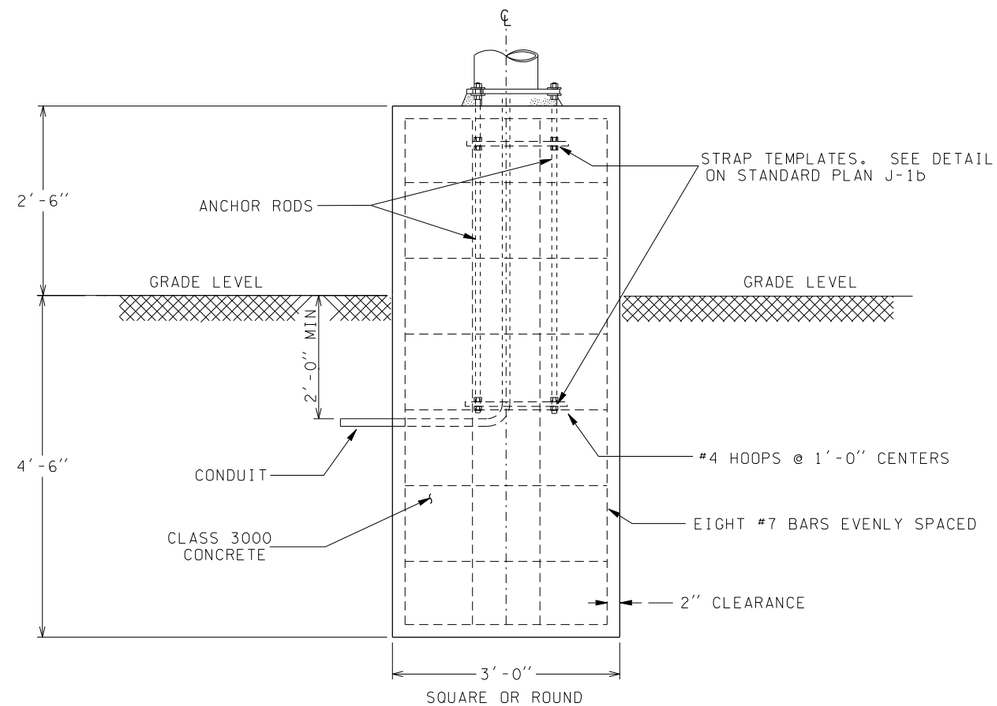

MODIFIED STEEL LIGHT STANDARD WITH FIXED BASE

SEE STD PLAN J-1b FOR OTHER DETAILS

FILE NAME	S:\414126\Electrical\MASTER_FILES\DETAILS V8\Ltbase.dgn						
TIME	12:49:41 PM				REGION NO.	STATE	FED.AID PROJ.NO.
DATE	01/05/2005				10	WASH	
					JOB NUMBER		
DESIGNED BY							
ENTERED BY							
CHECKED BY		MODIFIED STEEL LIGHT STD FOUNDATION	12-11-03	KN	CONTRACT NO.		LOCATION NO.
PROJ. ENGR.		NEW SHEET PLACEMENT	4-16-03	JH			
REGIONAL ADM.		REVISION	DATE	BY			

P.E. STAMP BOX DATE

P.E. STAMP BOX DATE

Washington State Department of Transportation

MODIFIED STEEL LIGHT STANDARD FOUNDATION FOR USE IN PARKING LOTS

ENGLISH

PLOT1

5.20E

SHEET OF SHEETS

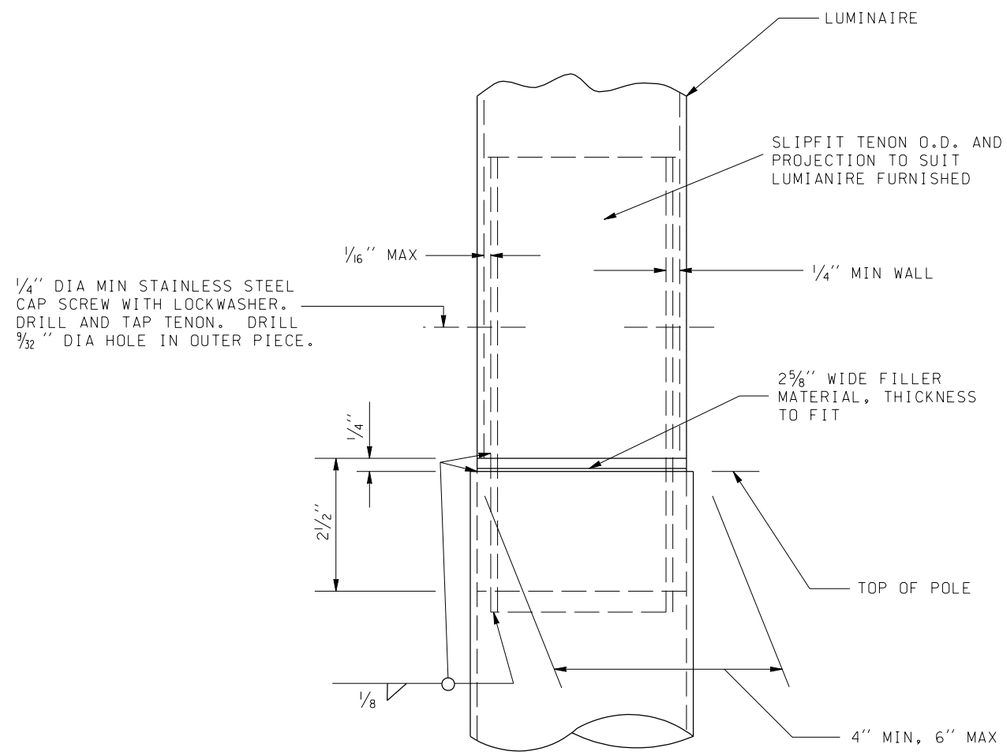

LIGHT STANDARD DETAIL-NO MAST ARM

FILE NAME	S:\414126\Electrical\MASTER_FILES\DETAILS V8\Ltstandard_e.dgn						
TIME	02:13:23 PM				REGION NO.	STATE	FED.AID PROJ.NO.
DATE	02/04/2004				10	WASH	
DESIGNED BY	**WSDOT**				JOB NUMBER		
ENTERED BY	**K. NGUYEN**						
CHECKED BY					CONTRACT NO.		LOCATION NO.
PROJ. ENGR.							
REGIONAL ADM.		REVISION	DATE	BY			

P.E. STAMP BOX DATE

P.E. STAMP BOX DATE

Washington State Department of Transportation

ENGLISH

LIGHT STANDARD DETAIL

PLOT1

5.30E

SHEET OF SHEETS

PLOT1 09/04/2024 09:04 C:\Electrical\MASTER_FILES\DETAILS V8\jb3mod-en.DGN

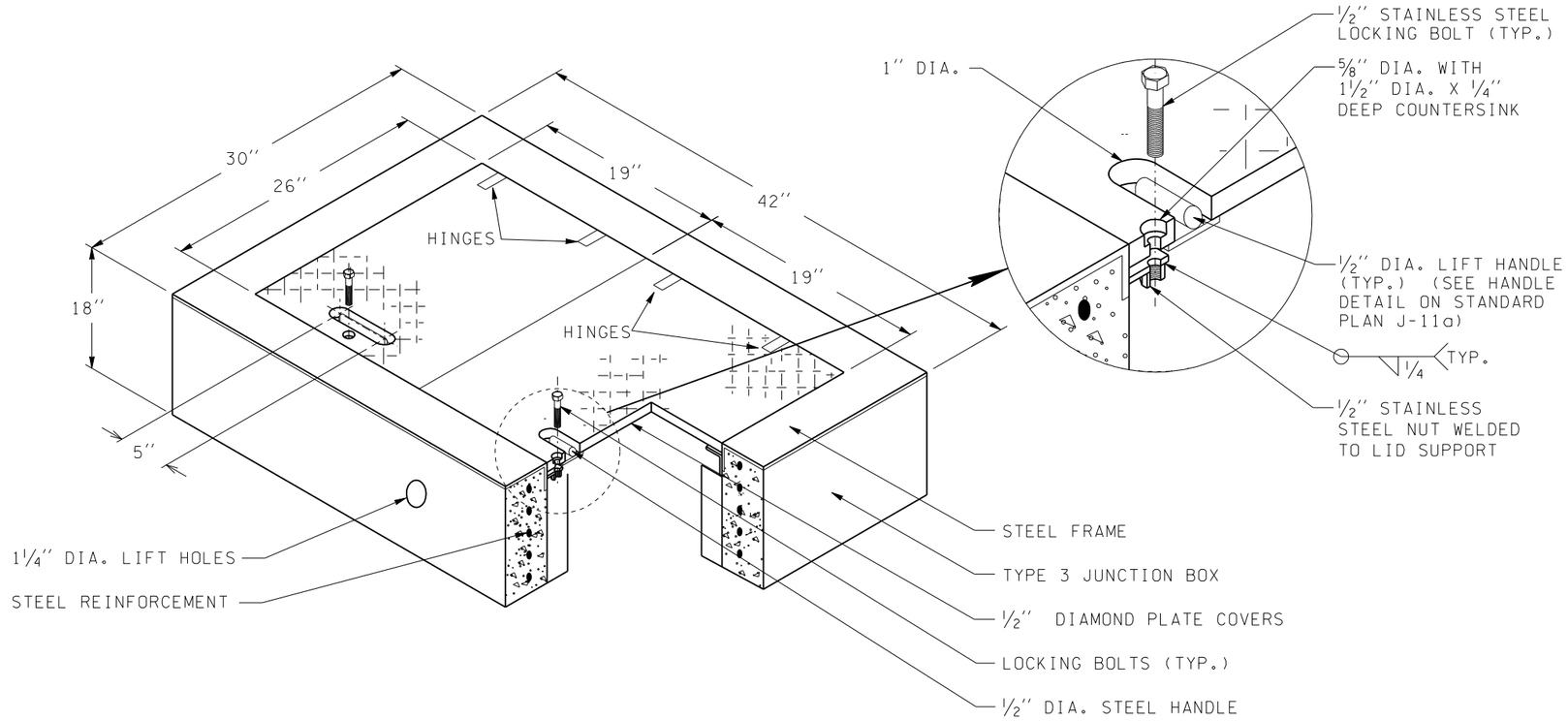

HISTORICAL DOCUMENT
FOR VIEWING PLEASURE ONLY!
USE TYPE 6 INSTEAD

TYPE 3 JUNCTION BOX (DUAL LID)

TYPE 3 JUNCTION BOXES SHALL MEET ALL SPECIFICATIONS ON STANDARD PLAN J-11a WITH THE EXCEPTION OF THE BOX DEPTH AND LID WHICH SHALL BE AS SHOWN ON THIS DETAIL. THE HINGES SHALL ALLOW THE LID TO OPEN 180°. WHEN CLOSED NO PARTS SHALL PROJECT ABOVE THE LID OR STEEL.

(NOT TO SCALE)

		2-26-97	DELETE WORD "MODIFIED"	BK	REGION NO.	STATE	FED.AID PROJ.NO.	ENVIRONMENTAL AND ENGINEERING SERVICE CENTER	Washington State Department of Transportation	(ENGLISH) WITH LOCKING BOLT	6.01E
		3-25-97	LOCKING BOLT DETAIL	BK							
DESIGNED BY WSDOT		4-29-97	TEXT	BK	10	WASH					
ENTERED BY WSDOT		3-12-98	TEXT	BK	JOB NUMBER						SHEET
CHECKED BY WSDOT		5-12-98	TEXT	JH						TYPE 3 J BOX (DUAL LID)	OF
PROJ. ENGR.											SHEETS
REGIONAL ADM.					CONTRACT NO.						
	DATE	DATE	REVISION	BY							

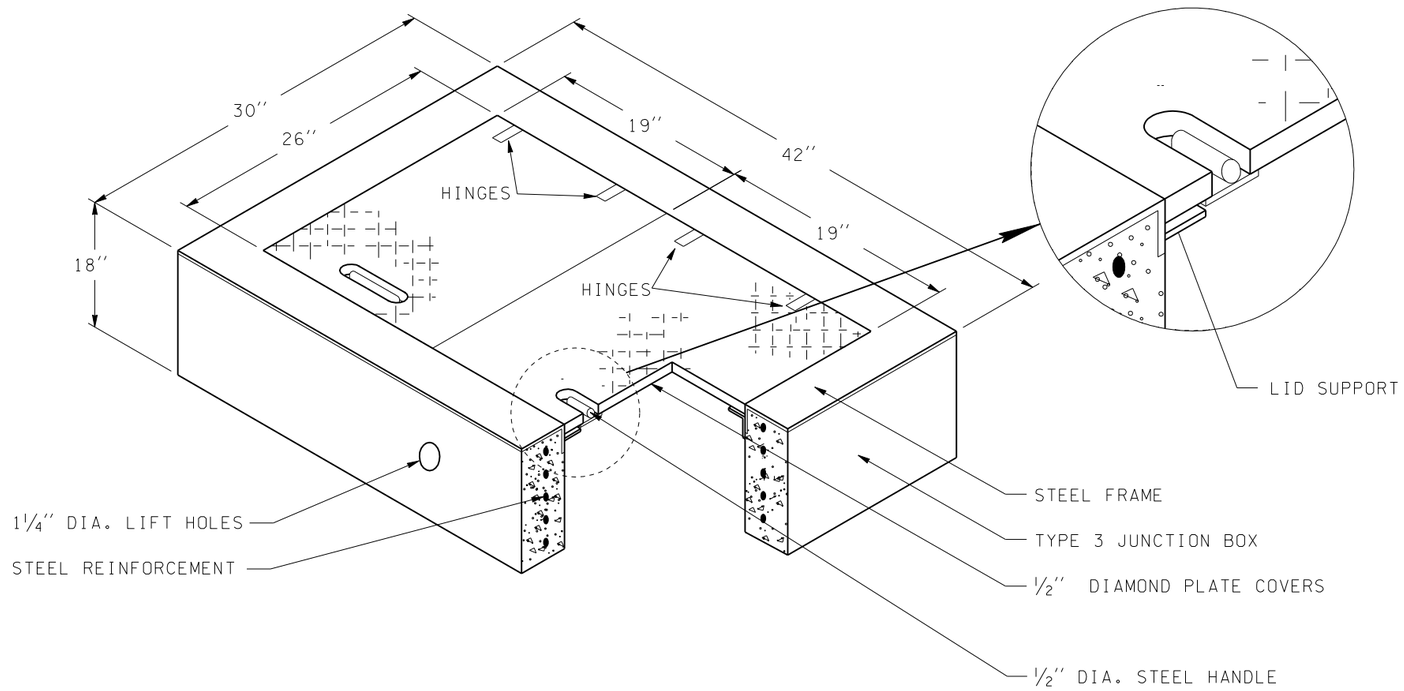

HISTORICAL DOCUMENT
FOR VIEWING PLEASURE ONLY!
USE TYPE 6 INSTEAD

TYPE 3 JUNCTION BOX (DUAL LID)

TYPE 3 JUNCTION BOXES SHALL MEET ALL SPECIFICATIONS IN STANDARD PLAN 11a WITH THE EXCEPTION OF THE BOX DEPTH AND LID WHICH SHALL BE AS SHOWN ON THIS DETAIL. THE HINGES SHALL ALLOW THE LID TO OPEN 180°.

(NOT TO SCALE)

	6-30-98		WITHOUT LOCKING BOLT	JH	REGION NO.	STATE	FED.AID PROJ.NO.	ENVIRONMENTAL AND ENGINEERING SERVICE CENTER	Washington State Department of Transportation	ENGLISH
DESIGNED BY WSDOT					10	WASH				WITHOUT LOCKING BOLT
ENTERED BY WSDOT					JOB NUMBER					
CHECKED BY WSDOT										
PROJ. ENGR.										
REGIONAL ADM.					CONTRACT NO.					TYPE 3 J BOX (DUAL LID)
	DATE	DATE	REVISION	BY						

6.02E

SHEET OF SHEETS

PLOT2 09/04/2008 09:04:12 Electrical\MASTER_FILES\DETAILS V8\jb3mod.dgn

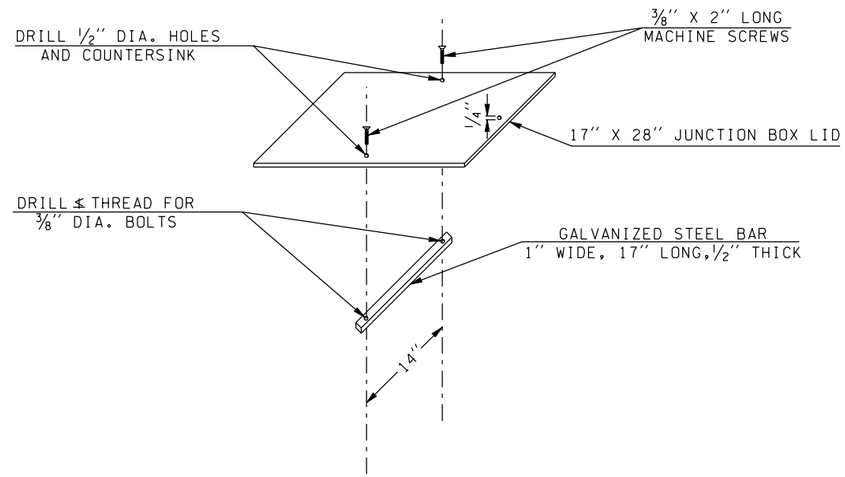

LOCKING HANDHOLE COVER
FASTENER DETAIL

NOTES

TO ASSEMBLE:

1. PUT SCREWS THRU LID HOLES.
2. SCREW THEM INTO BAR.
3. PEEN THREAD ENDS

TO ATTACH:

*1. GREASE THREADS.
2. PUT LID ON JUNCTION BOX.
*3. TIGHTEN SCREWS TO CLAMP LID IN PLACE.

* USE WATERPROOF GREASE

NOTE TO DESIGNER:
DIMENSIONS NEED TO BE VERIFIED
FOR TYPE OF BOX - TYPE I, II OR III
AND DRAWING MODIFIED.

DESIGNED BY WSDOT					REGION NO.	STATE	FED.AID PROJ.NO.	ENVIRONMENTAL AND ENGINEERING SERVICE CENTER	Washington State Department of Transportation	ENGLISH	6.03E
ENTERED BY WSDOT					10	WASH					
CHECKED BY WSDOT					JOB NUMBER						SHEET
PROJ. ENGR.											OF
REGIONAL ADM.					CONTRACT NO.					JUNCTION BOX DETAILS	SHEETS
	DATE	DATE	REVISION	BY							

PLOT1 06/18/2002 14126\Electrical\Web\dgn\jblockfstnr_e.DGN buthN

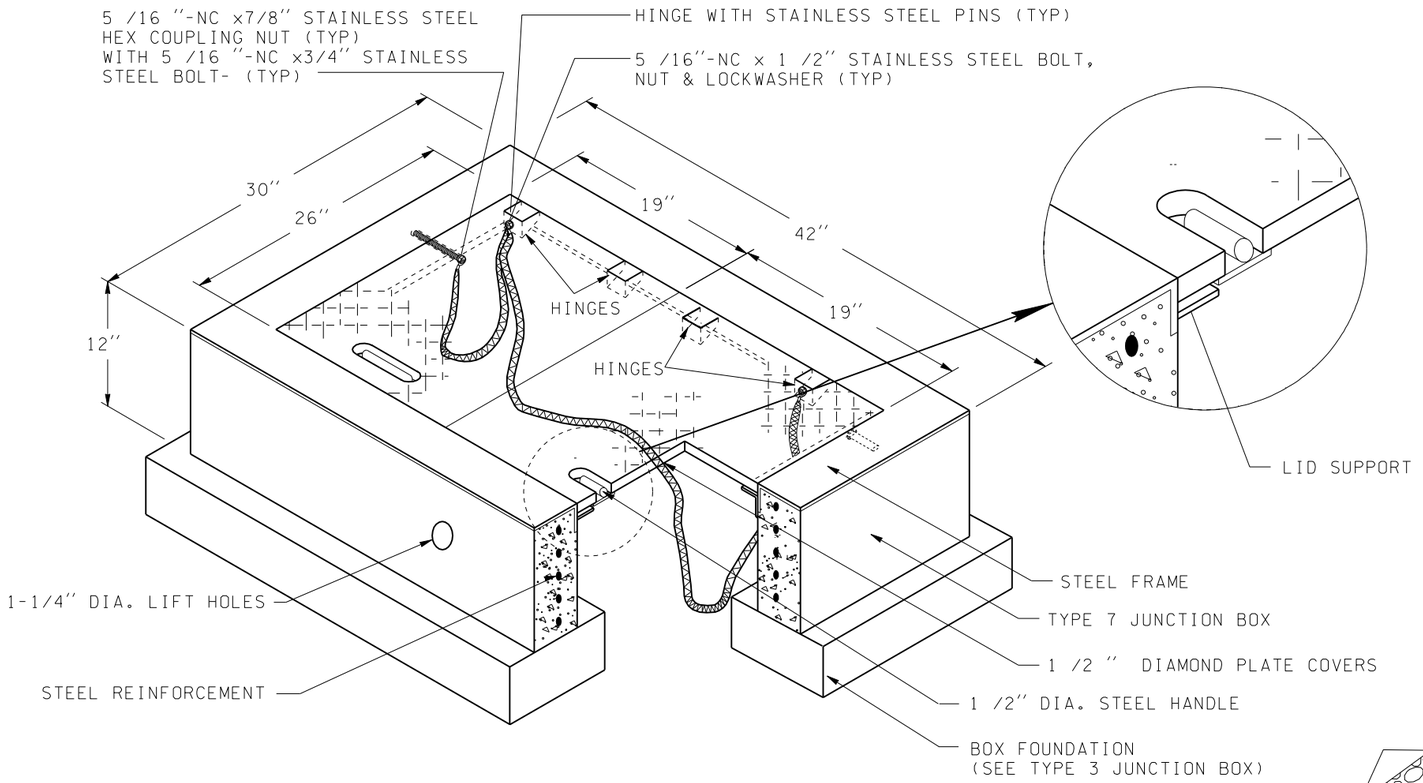

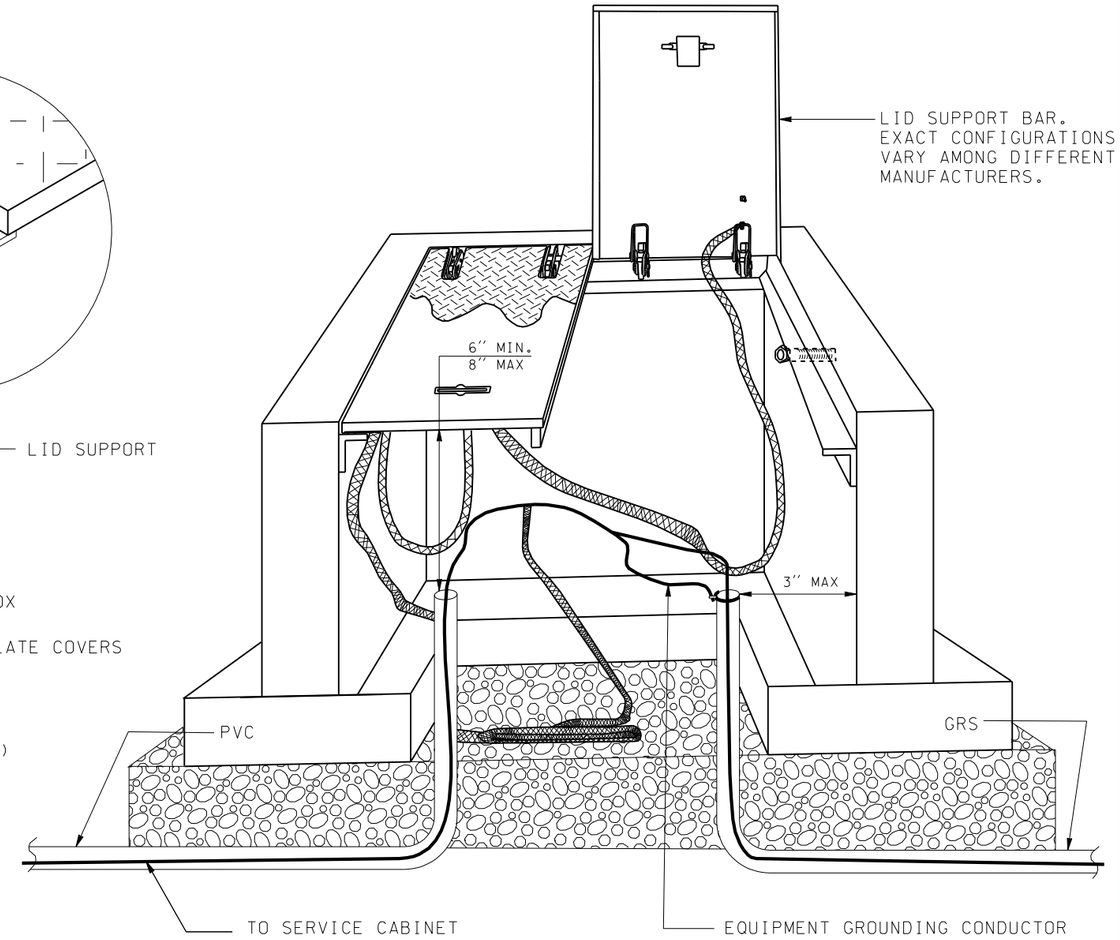

TYPE 7 JUNCTION BOX (DUAL LID)

TYPE 7 JUNCTION BOXES SHALL MEET ALL SPECIFICATIONS ON STANDARD PLAN J-11a TYPE 3 JUNCTION BOX WITH THE EXCEPTION OF THE BOX LID WHICH SHALL BE AS SHOWN ON THIS DETAIL. THE HINGES SHALL ALLOW THE LID TO OPEN 180°. WHEN CLOSED NO PARTS SHALL PROJECT ABOVE THE LID OR STEEL FRAME.

(NOT TO SCALE)

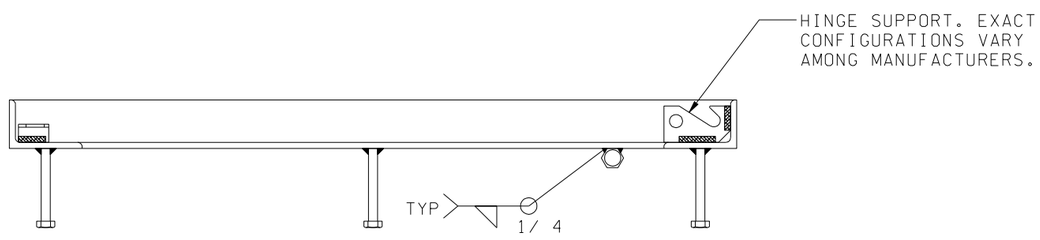

SECTION AA

NOTES:

1. BOND LIDS TO FRAME.
2. BONDING JUMPER IS TINNED BRAIDED COPPER -#8 MINIMUM x 4 FEET.
3. BOND FRAME TO EQUIPMENT GROUNDING CONDUCTOR.
4. LIBERALLY COAT ALL BOLTED ASSEMBLIES WITH ANTI-SEIZE COMPOUND.

FILE NAME	S:\414126\Electrical\MASTER_FILES\DETAILS V8\jbtype7&8 8-31-04.dgn						
TIME	06:41:19 AM				REGION NO. 10	STATE WASH	FED.AID PROJ.NO.
DATE	09/01/2004				JOB NUMBER		
DESIGNED BY	**WSDOT**						
ENTERED BY	**WSDOT**	ADD BOND JUMP, & DETAILS	7-13-04	JH			
CHECKED BY	**WSDOT**	ADD BOX FOUNDATION	3-25-04	KN	CONTRACT NO.	LOCATION NO.	
PROJ. ENGR.		WITHOUT LOCKING BOLT	6-30-98	JH			
REGIONAL ADM.		REVISION	DATE	BY			

P.E. STAMP BOX DATE

P.E. STAMP BOX DATE

Washington State Department of Transportation

ENGLISH WITHOUT LOCKING BOLT

TYPE 7 J BOX (DUAL LIDS)

PLOT2

6.10E

SHEET OF SHEETS

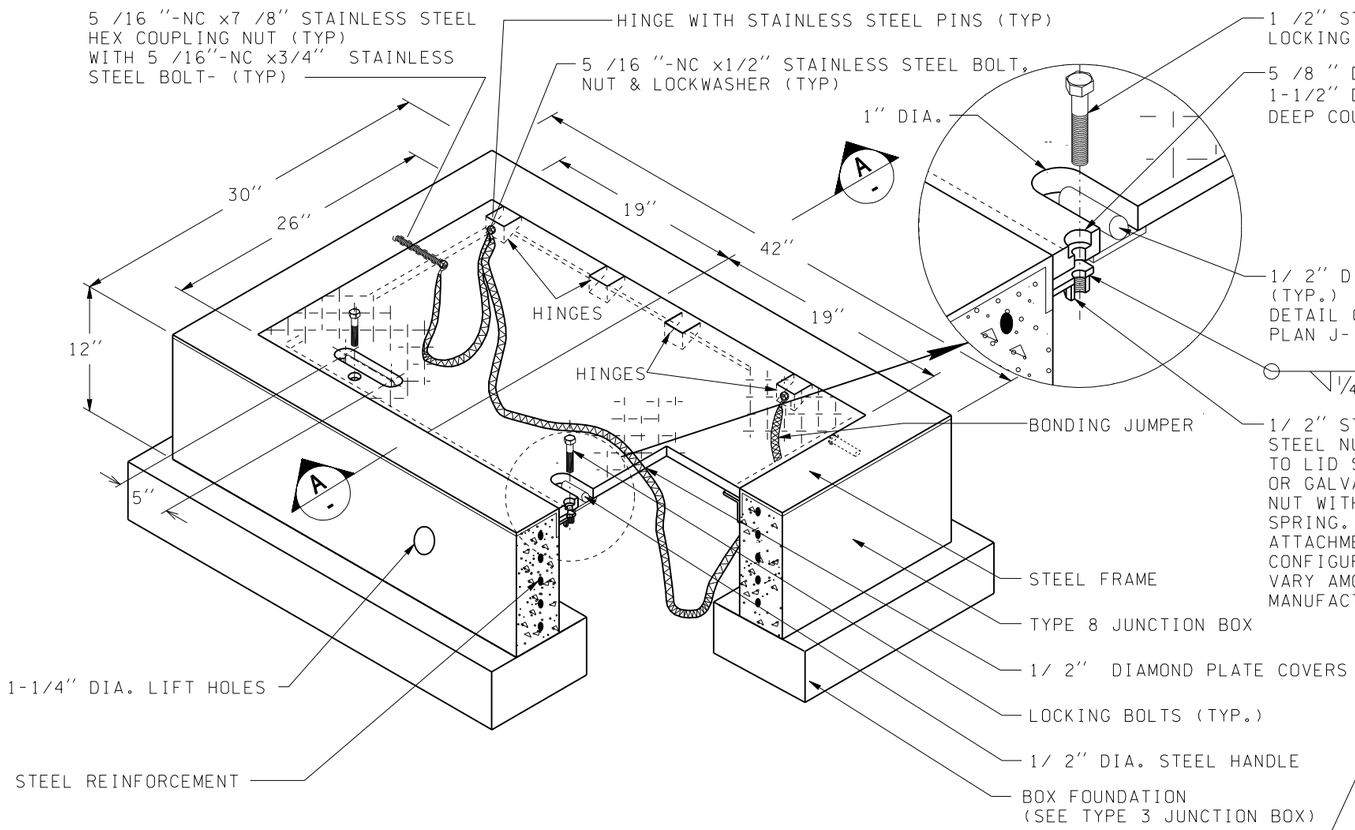

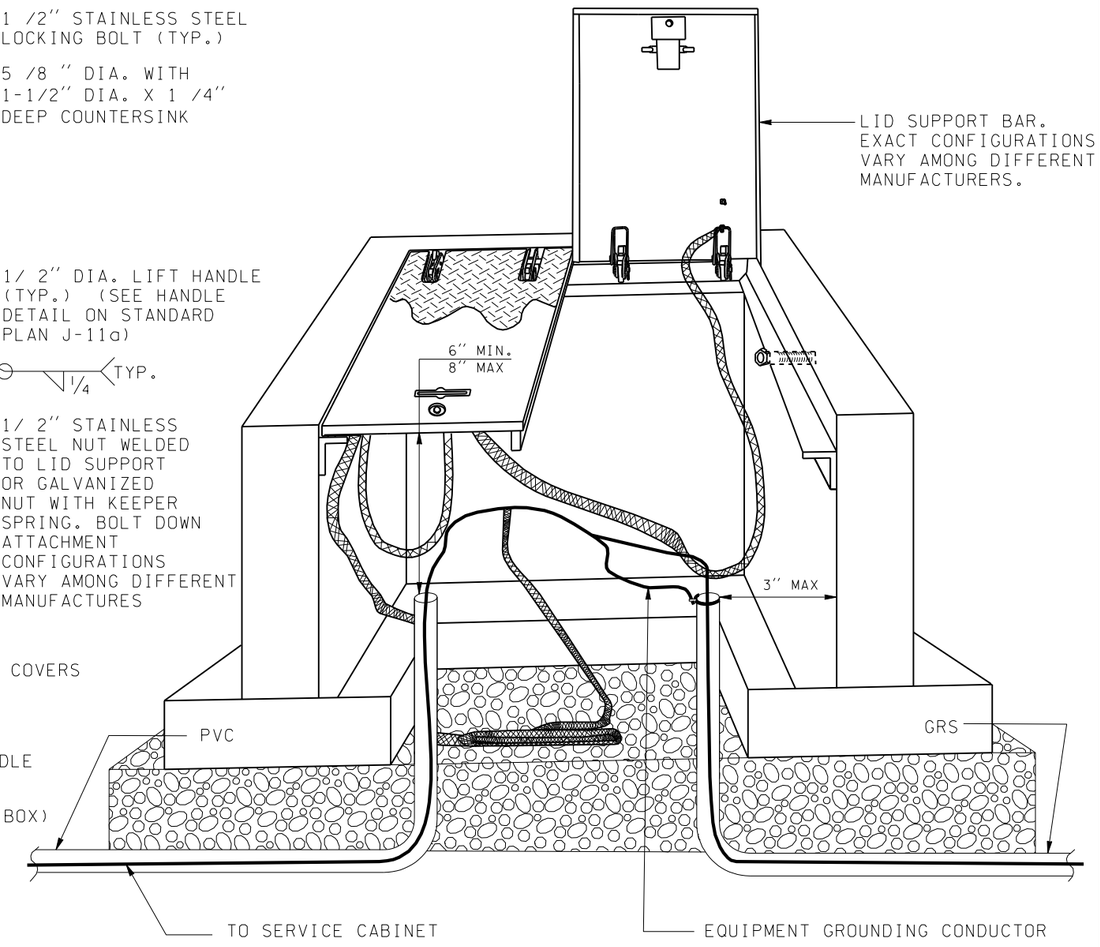

TYPE 8 JUNCTION BOX (DUAL LID)

TYPE 8 JUNCTION BOXES SHALL MEET ALL SPECIFICATIONS ON STANDARD PLAN J-11a TYPE 3 JUNCTION BOX WITH THE EXCEPTION OF THE BOX LID WHICH SHALL BE AS SHOWN ON THIS DETAIL. THE HINGES SHALL ALLOW THE LID TO OPEN 180°. WHEN CLOSED NO PARTS SHALL PROJECT ABOVE THE LID OR STEEL FRAME.

(NOT TO SCALE)

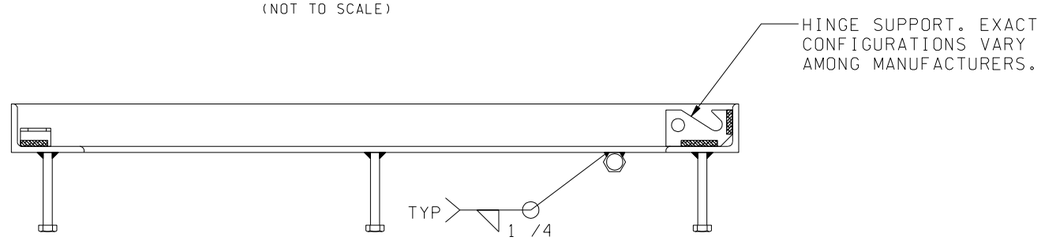

SECTION AA

NOTES:

1. BOND LIDS TO FRAME.
2. BONDING JUMPER IS TINNED BRAIDED COPPER -#8 MINIMUM x 4 FEET.
3. BOND FRAME TO EQUIPMENT GROUNDING CONDUCTOR.
4. LIBERALLY COAT ALL BOLTED ASSEMBLIES WITH ANTI-SEIZE COMPOUND.

FILE NAME	S:\414126\Electrical\MASTER_FILES\DETAILS V8\jbtype7&8 8-31-04.dgn						
TIME	06:42:00 AM	ADD BOND JUMP, & DETAILS	7-13-04	JH	REGION NO. 10	STATE WASH	FED.AID PROJ.NO.
DATE	09/01/2004	ADD BOX FOUNDATION	4-15-04	KN			
		TEXT	5-12-98	JH			
DESIGNED BY	WSDOT	TEXT	3-12-98	BK	JOB NUMBER		
ENTERED BY	WSDOT	TEXT	4-29-97	BK			
CHECKED BY	WSDOT	LOCKING BOLT DETAIL	3-25-97	BK	CONTRACT NO.		LOCATION NO.
PROJ. ENGR.		DELETE WORD "MODIFIED"	2-26-97	BK			
REGIONAL ADM.		REVISION	DATE	BY			

DATE
P.E. STAMP BOX

DATE
P.E. STAMP BOX

Washington State Department of Transportation

ENGLISH WITH LOCKING BOLT

TYPE 8 J BOX (DUAL LIDS)

PLOT1

6.11E

SHEET OF SHEETS

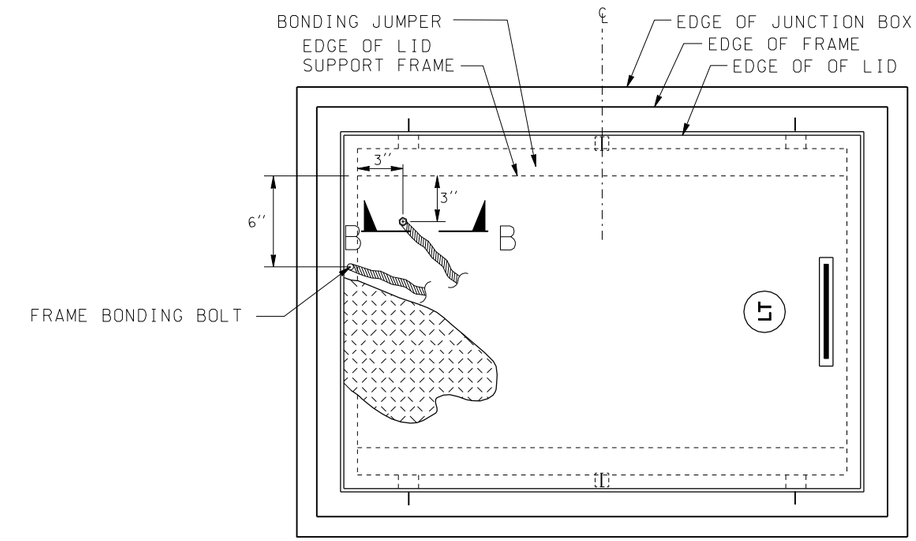

PLAN

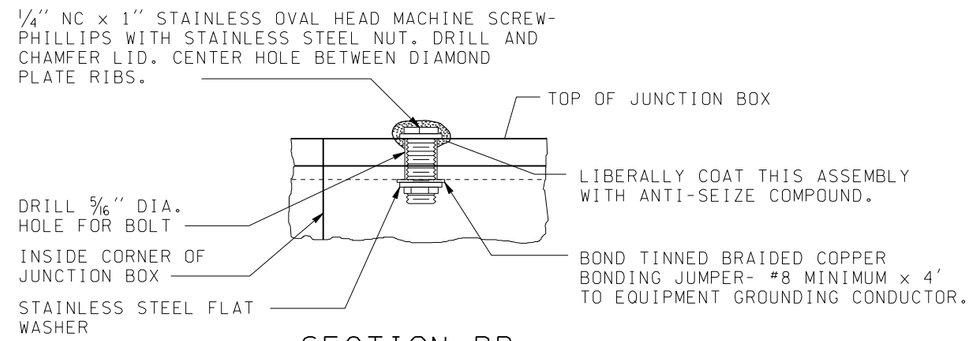

SECTION BB

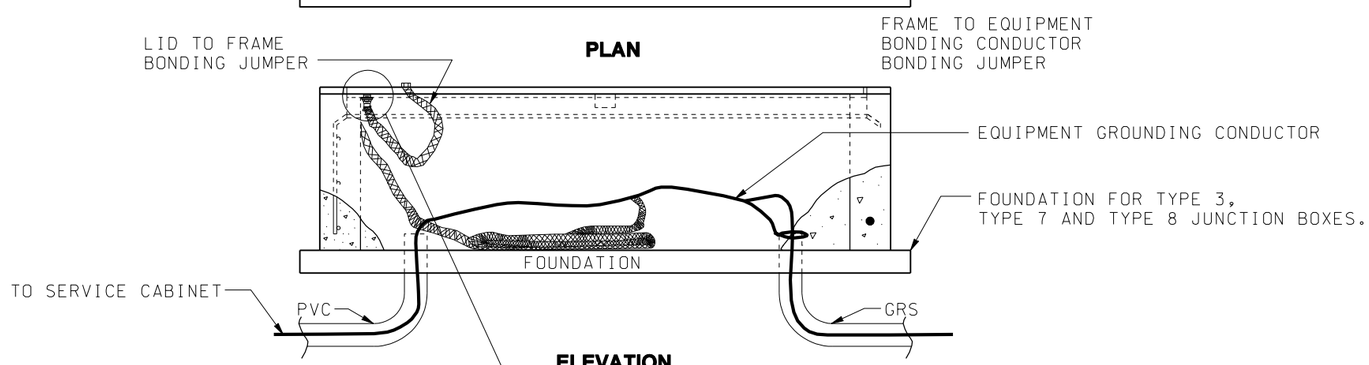

ELEVATION

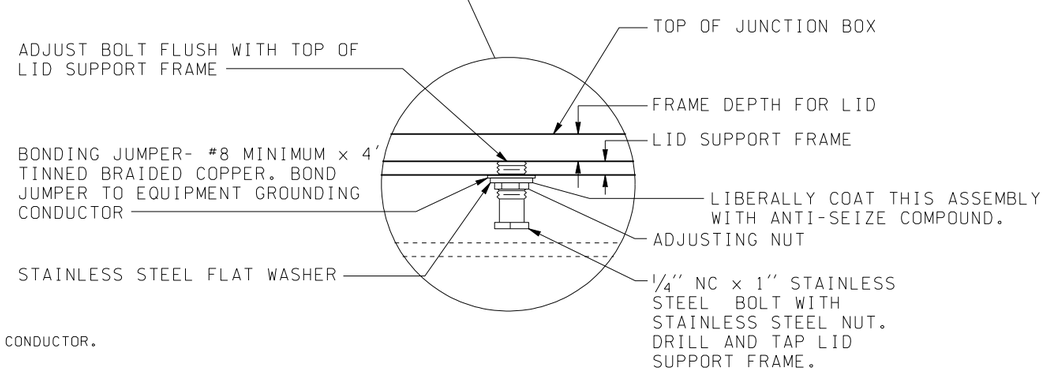

TYPE 1,2,3,7 &8 JUNCTION BOX

EXISTING FRAME & LID BONDING DETAIL

NOTES:

1. BOND LIDS TO FRAME.
2. BONDING JUMPER IS TINNED BRAIDED COPPER -#8 MINIMUM x 4 FEET.
3. BOND FRAME TO EQUIPMENT GROUNDING CONDUCTOR.

FILE NAME	S:\414126\Electrical\MASTER_FILES\DETAILS V8\jbtype7&8 8-17-04.dgn								PLOT11
TIME	01:42:00 PM				REGION NO. 10	STATE WASH	FED.AID PROJ.NO.	Washington State Department of Transportation	TYPE 1,2,3,7&8 JUNCTION BOX	6.12E
DATE	08/18/2004				JOB NUMBER					SHEET
DESIGNED BY	WSDOT									OF
ENTERED BY	WSDOT									SHEETS
CHECKED BY	WSDOT				CONTRACT NO.		LOCATION NO.		EXISTING FRAME AND LID BONDING DETAIL	
PROJ. ENGR.										
REGIONAL ADM.		REVISION	DATE	BY						

P.E. STAMP BOX DATE

P.E. STAMP BOX DATE

PLOT1 06/18/2002 2:\414126\Electrical\Web\dgn\Flssjb_e.dgn MbuthN

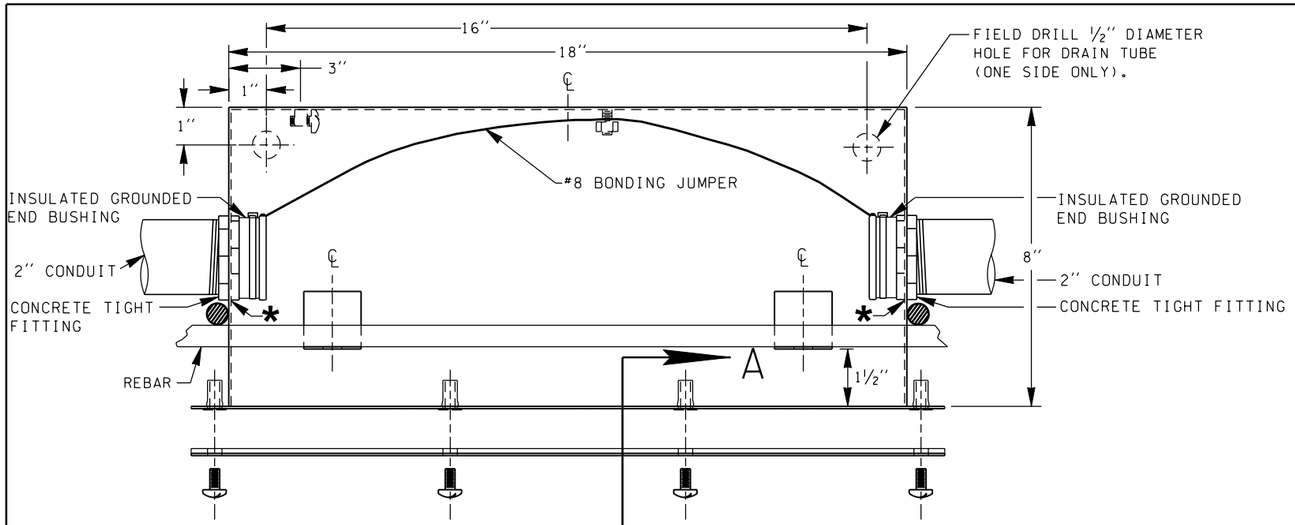

* USE THIS SAME METHOD FOR EVERY CONDUIT THAT ENTERS THE JUNCTION BOX. FIELD DRILL OR PUNCH HOLES FOR CONDUIT ENTRY WHILE MAINTAINING CONCRETE TIGHT ENTRANCE.

PLAN VIEW

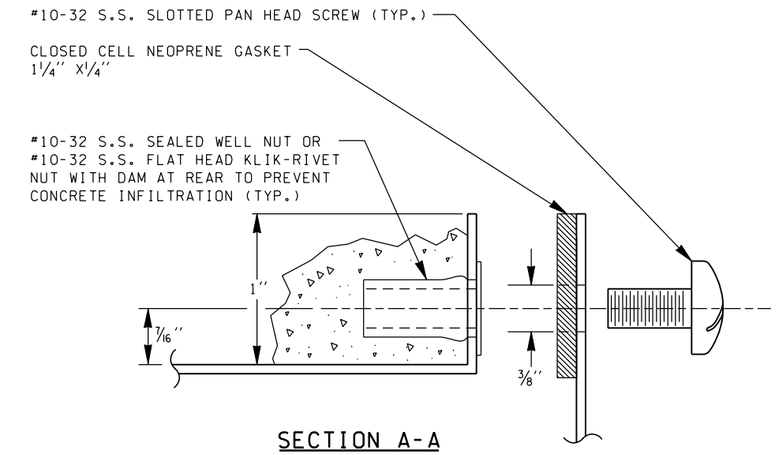

SECTION A-A

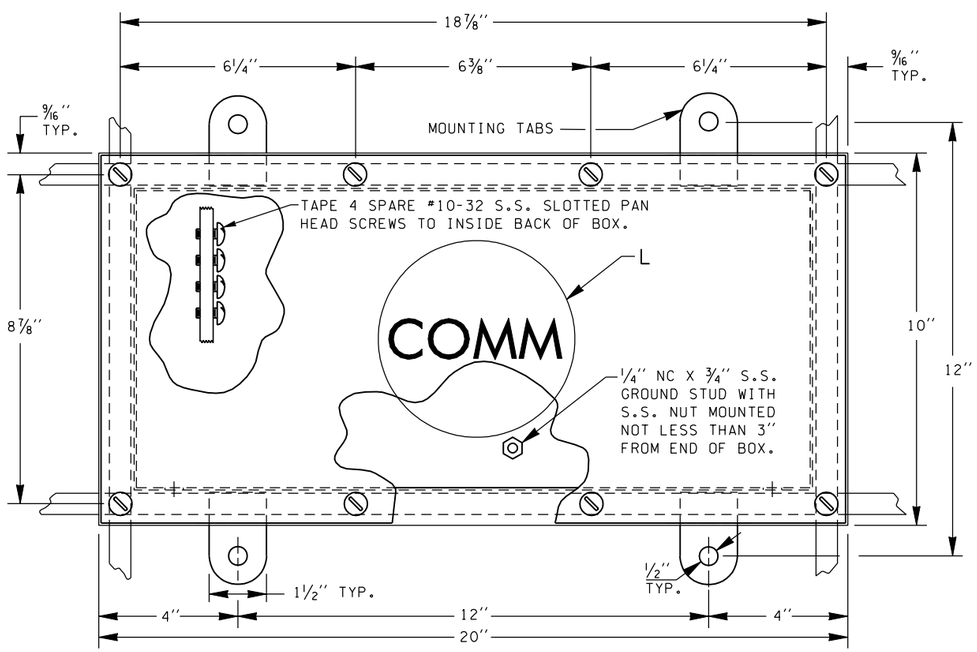

PROFILE VIEW

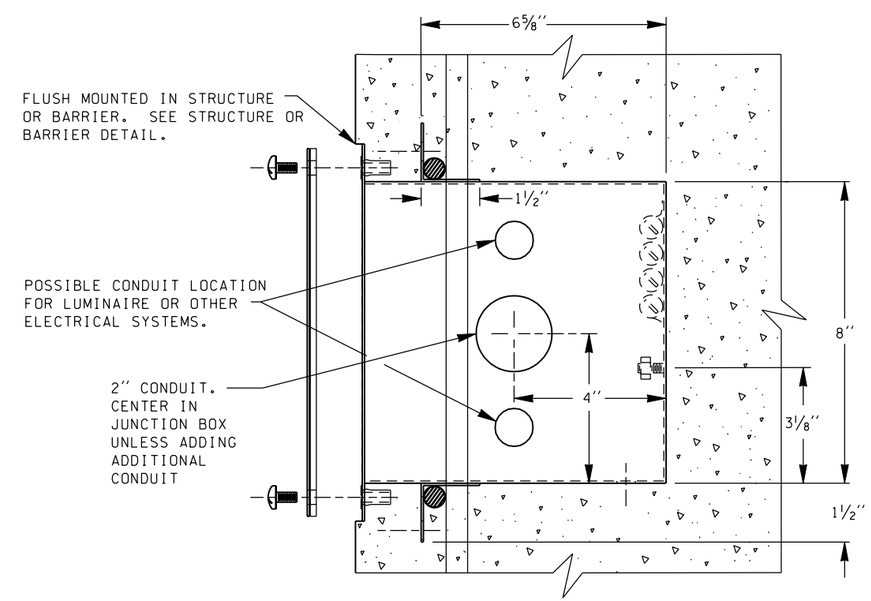

SIDE VIEW

LEGEND DETAIL

MARK L

1'' NOM. ITS 1'' NOM.

INTELLIGENT TRANSPORTATION SYSTEM

1'' NOM. COMM 1'' NOM.

COMMUNICATION SYSTEM

1'' NOM. LT 1'' NOM.

LIGHTING SYSTEM

1'' NOM. TS 1'' NOM.

TRAFFIC SIGNAL SYSTEM

FORM LETTERS WITH 1/16'' S.S. WELDED OR ENGRAVED LINE THICKNESS OR STAMP

NEMA 4X FLUSH MOUNT J-BOX

TYPE 304 STAINLESS STEEL, WELDED SEAM CONSTRUCTION
#12 GA BACKBOX W / #2B FINISH
#12 GA COVER W / #4 FINISH
#12 GA MOUNTING TABS
NOT TO SCALE

GENERAL NOTE: JUNCTION BOX LABELING SHOWN FOR STRUCTURES ONLY. LABEL ALL OTHER JUNCTION BOXES PER STANDARD PLAN J-11a AND SPECIAL PROVISIONS.

	4/4/00		Dimensioning, added	TB	REGION NO.	STATE	FED.AID PROJ.NO.
			conduit, labeled views, legend ITS		10	WASH	
DESIGNED BY	1/20/00		MISSPELLED SURVEILLANCE (LEGEND)	JH			
ENTERED BY J. HARVEY	5/28/99		TYPE 316 TO TYPE 304	JH	JOB NUMBER		
CHECKED BY	1/28/99		removed bus bar	JH			
PROJ. ENGR.	6/22/98		size &location				
REGIONAL ADM.			of mounting tabs	JH	CONTRACT NO.		
	DATE	DATE	REVISION	BY			

FIELD OPERATIONS SERVICE SUPPORT CENTER

Washington State Department of Transportation

ENGLISH

FLUSH MOUNT SS J-BOX

6.20E

SHEET OF SHEETS

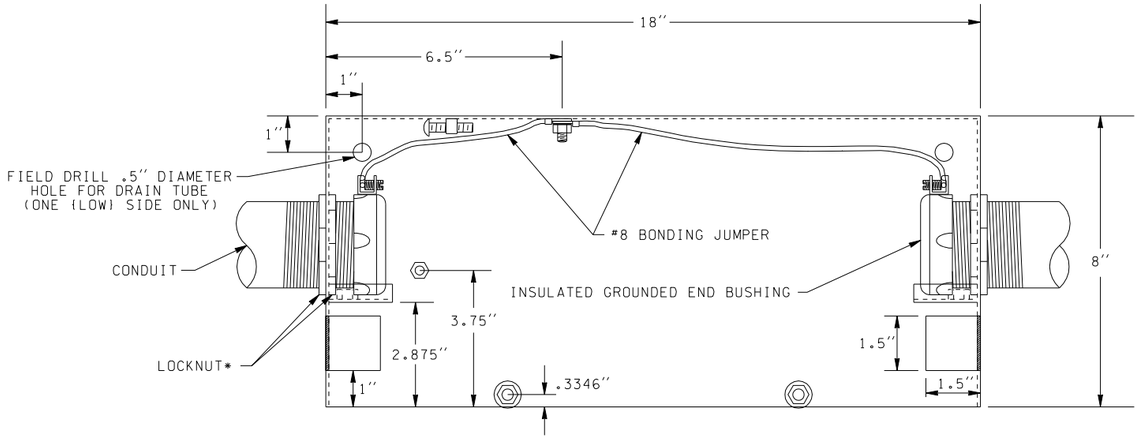

JUNCTION BOX
PLAN VIEW

* USE THIS METHOD FOR EVERY CONDUIT ENTERING JUNCTION BOX. FIELD DRILL OR PUNCH HOLES FOR CONDUIT WHILE MAINTAINING CONCRETE TIGHT ENTRANCE.

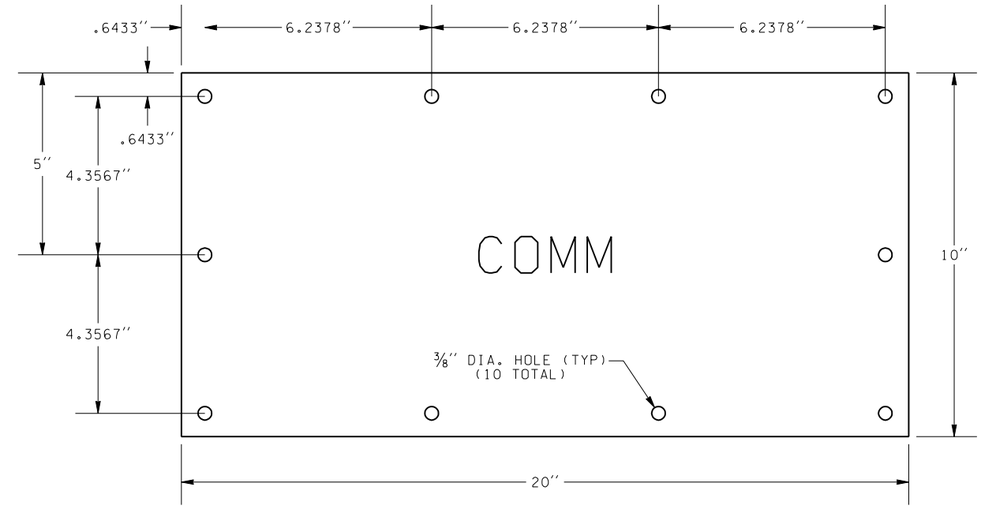

PERMANENT COVER
12 GUAGE TYPE 304 STAINLESS STEEL WITH #4 FINISH

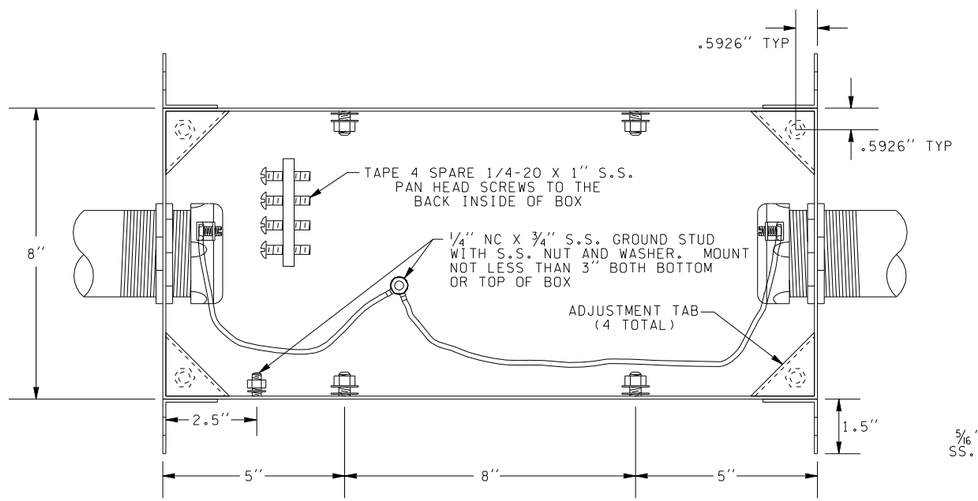

JUNCTION BOX
PROFILE VIEW

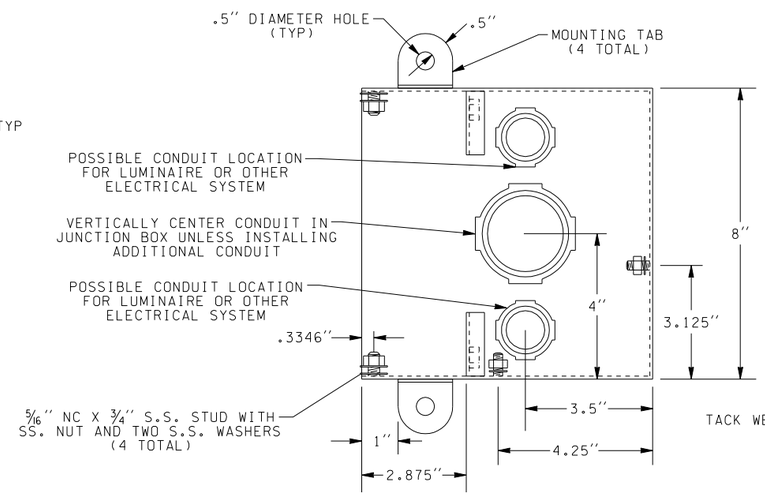

JUNCTION BOX
SIDE VIEW

CONDUITS SHALL BE VERTICALLY ALIGNED. CONDUITS SHALL BE PLACED WITH EQUIDISTANCE FROM ADJACENT CONDUITS TO JUNCTION BOX WALLS

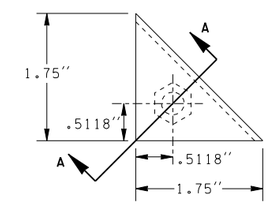

ADJUSTMENT TAB DETAIL

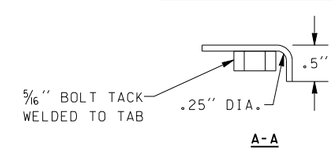

A-A

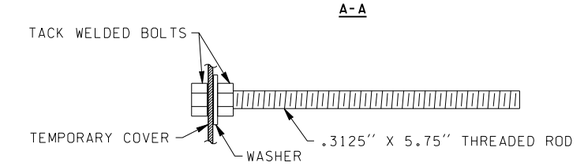

ADJUSTMENT BOLT DETAIL

NEMA 3R ADJUSTABLE FLUSH MOUNT JUNCTION BOX

TYPE 304 STAINLESS STEEL, WELDED SEAM CONSTRUCTION
12 GUAGE BOX WITH #2B FINISH
12 GUAGE ADJUSTMENT TABS
12 GUAGE MOUNTING TABS

FILE NAME	S:\414126\Electrical\MASTER_FILES\DETAILS V8\Adjflsjb.dgn								PLOT1
TIME	08:03:36 AM				REGION NO. 10	STATE WASH	FED.AID PROJ.NO.	Washington State Department of Transportation	ENGLISH	6.21E
DATE	12/21/2004									
PLOTTED BY	trinhha				JOB NUMBER					
DESIGNED BY										
ENTERED BY										
CHECKED BY					CONTRACT NO.		LOCATION NO.		NEMA 3R ADJUSTABLE JUNTION BOX	SHEET OF SHEETS
PROJ. ENGR.										
REGIONAL ADM.		REVISION	DATE	BY						

P.E. STAMP BOX DATE

P.E. STAMP BOX DATE

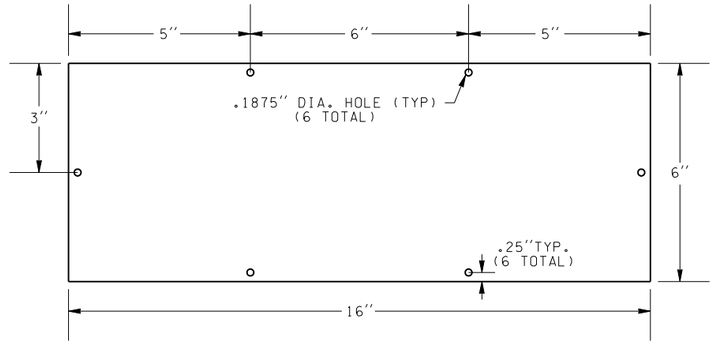

TEMPORARY ACCESS COVER
12 GUAGE STEEL

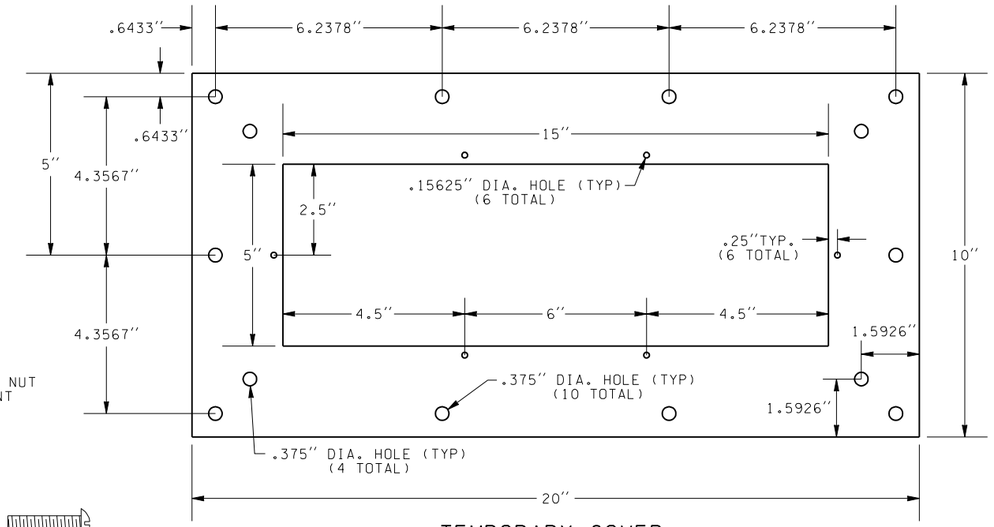

TEMPORARY COVER
12 GUAGE STEEL

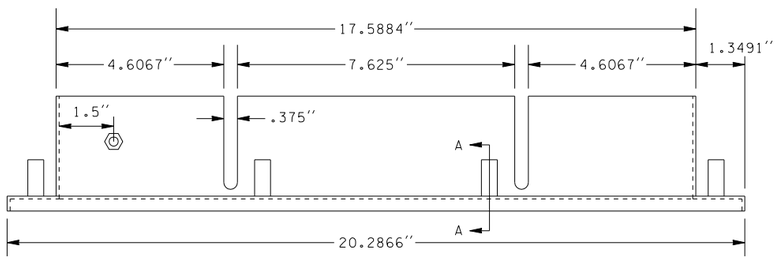

ADJUSTABLE FACE
PLAN VIEW

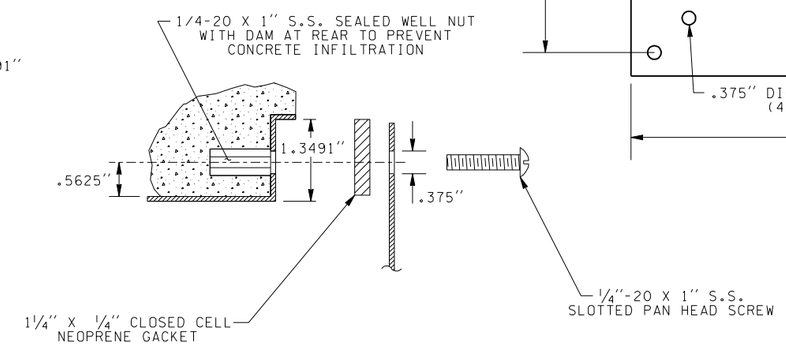

A-A

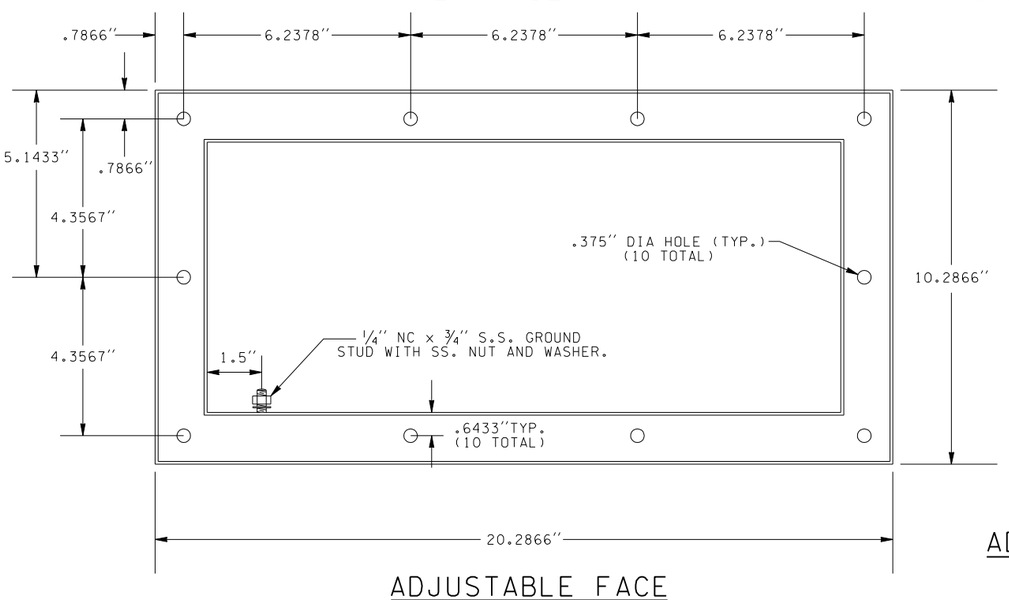

ADJUSTABLE FACE
PROFILE VIEW

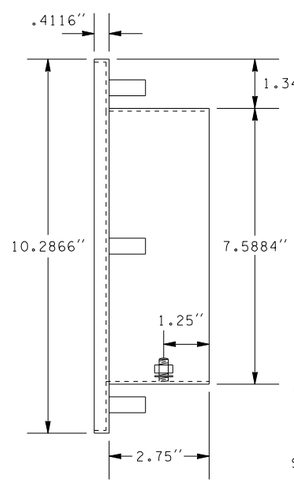

ADJUSTABLE FACE
SIDE VIEW

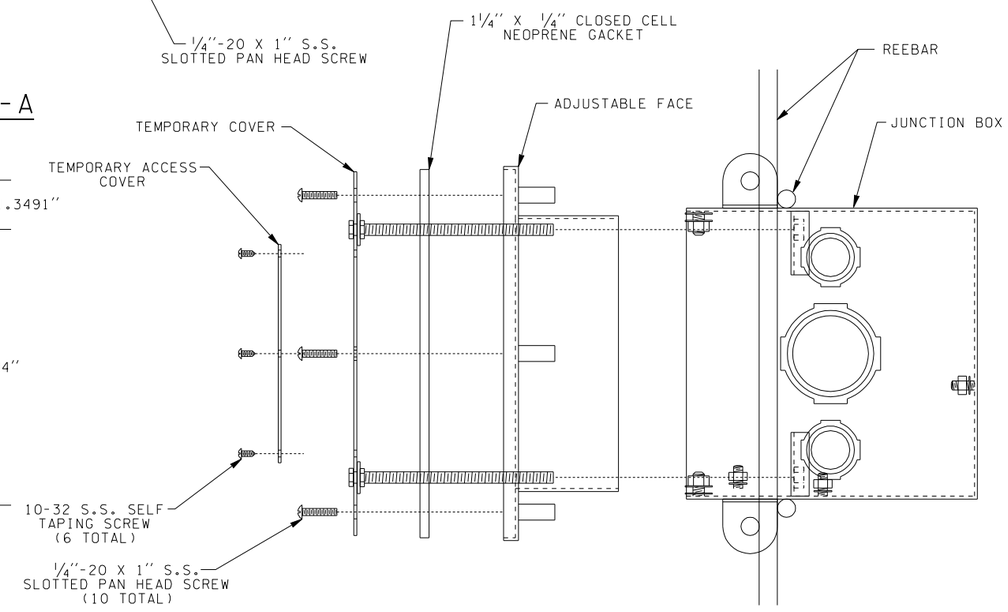

NEMA 3R ADJUSTABLE FLUSH MOUNT JUNCTION BOX

TYPE 304 STAINLESS STEEL, WELDED SEAM CONSTRUCTION
12 GUAGE BOX WITH #2B FINISH
12 GUAGE ADJUSTMENT TABS
12 GUAGE MOUNTING TABS

FILE NAME	S:\414126\Electrical\MASTER_FILES\DETAILS V8\Adjflsjb.dgn						PLOT2
TIME	08:04:19 AM				REGION NO. 10 / STATE WASH	FED.AID PROJ.NO.	6.22E
DATE	12/21/2004						
PLOTTED BY	trinhha				JOB NUMBER		
DESIGNED BY							
ENTERED BY							
CHECKED BY					CONTRACT NO.	LOCATION NO.	
PROJ. ENGR.							
REGIONAL ADM.		REVISION	DATE	BY			

P.E. STAMP BOX DATE

P.E. STAMP BOX DATE

Washington State Department of Transportation

ENGLISH

NEMA 3R ADJUSTABLE JUNTION BOX

SHEET OF SHEETS

PLOT1 06/18/2002 z:\414126\Electrical\Web\dgn\signwi_e.DGN MbuthN

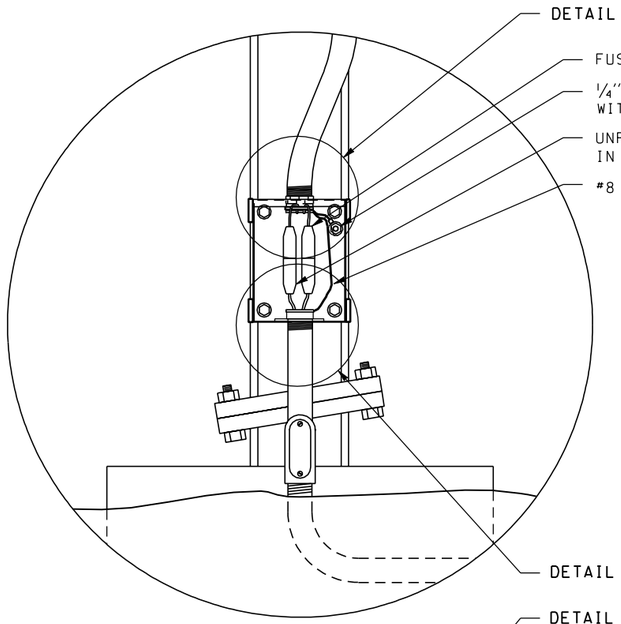

METAL POST
A-A

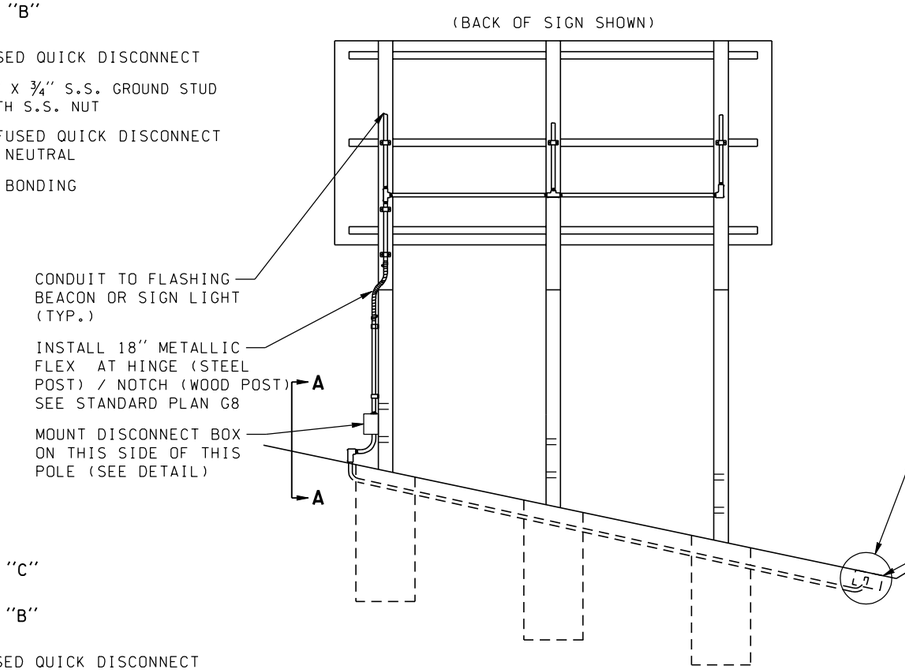

NOTES:

1. SEE SIGNING PLAN SHEETS FOR NUMBER OF POSTS.
2. MOUNT DISCONNECT BOX ON POST FARTHEST FROM ROADWAY.

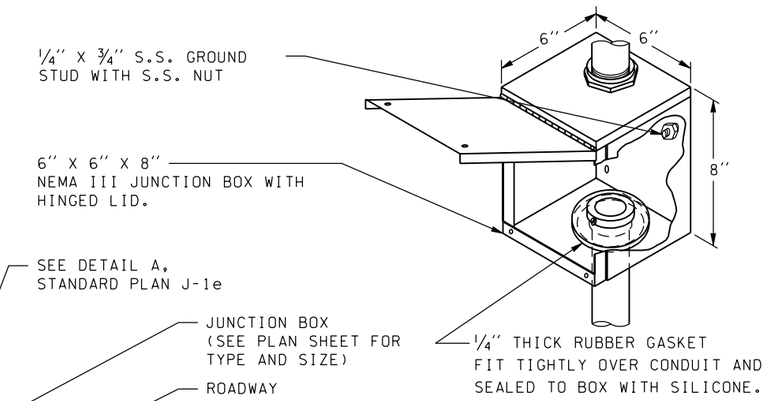

JUNCTION BOX

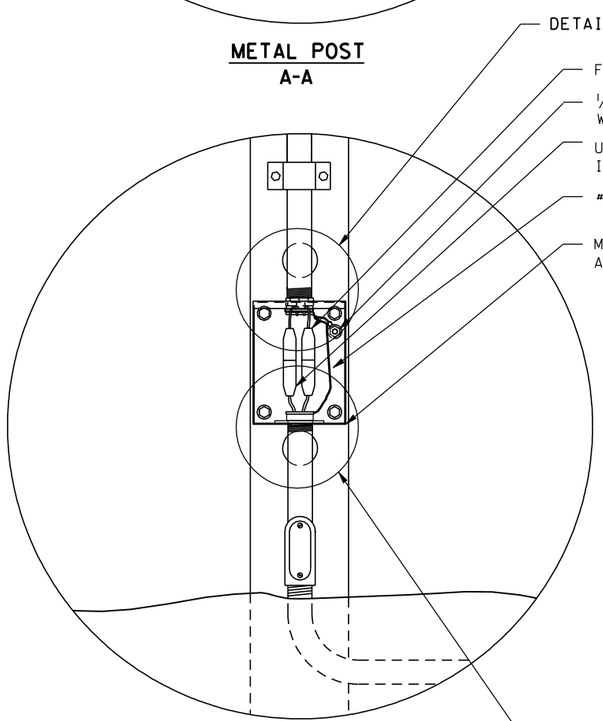

WOOD POST
A-A

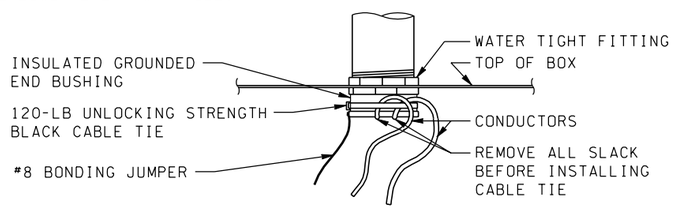

DETAIL "B"

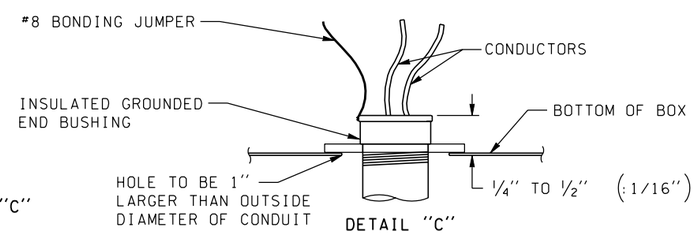

DETAIL "C"

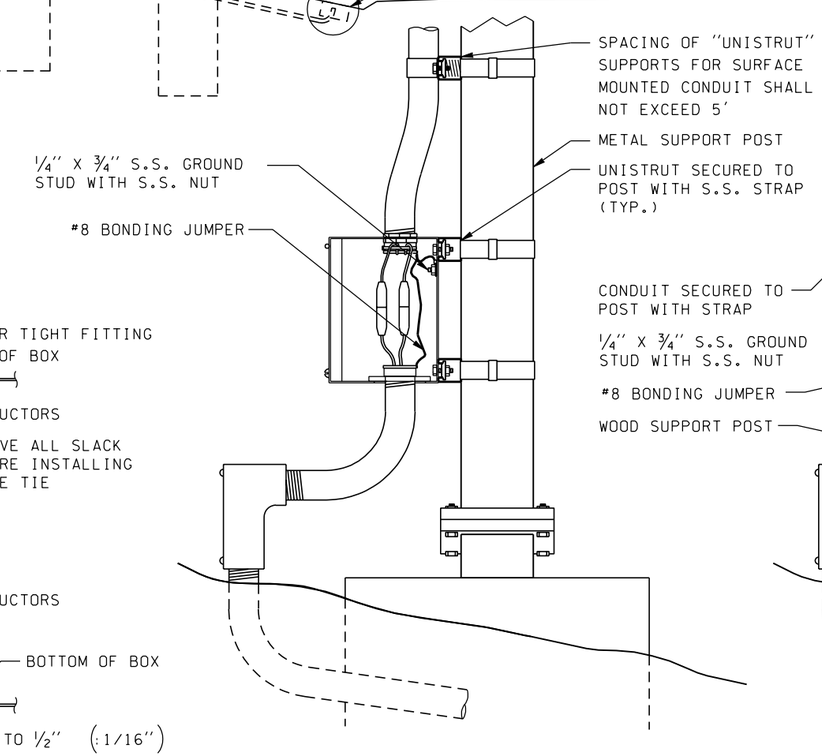

METAL POST

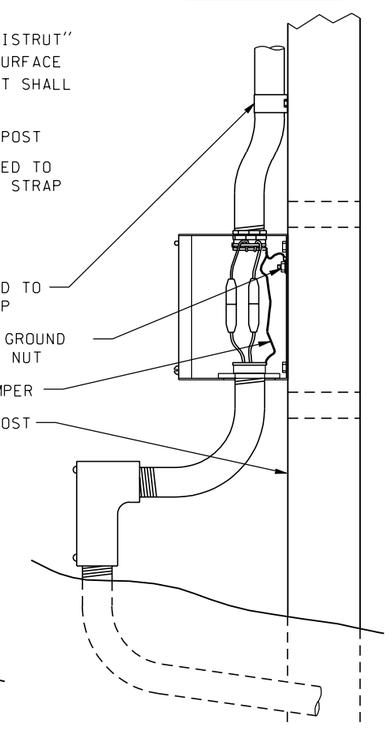

WOOD POST

SIGN POST MOUNTED JUNCTION BOX DETAILS

NOT TO SCALE

					REGION NO.	STATE	FED.AID PROJ.NO.
DESIGNED BY WSDOT					10	WASH	
ENTERED BY WSDOT		11-15-00	CONDULET TO 18" METALLIC FLEX	JH			
CHECKED BY WSDOT		7-9-99	QUICK FUSE/ BOND JUMPER/WTIGHT FIT	JH	JOB NUMBER		
PROJ. ENGR.		7-7-97	ADDED GASKET	BK			
REGIONAL ADM.	4-12-95	3-6-97	UPDATED JUNCTION BOX	BK	CONTRACT NO.		
	DATE	DATE	REVISION	BY			

ENVIRONMENTAL AND ENGINEERING SERVICE CENTER

Washington State Department of Transportation

ENGLISH

SIGN POST MOUNTED JUNCTION BOX

6.30E

SHEET OF SHEETS

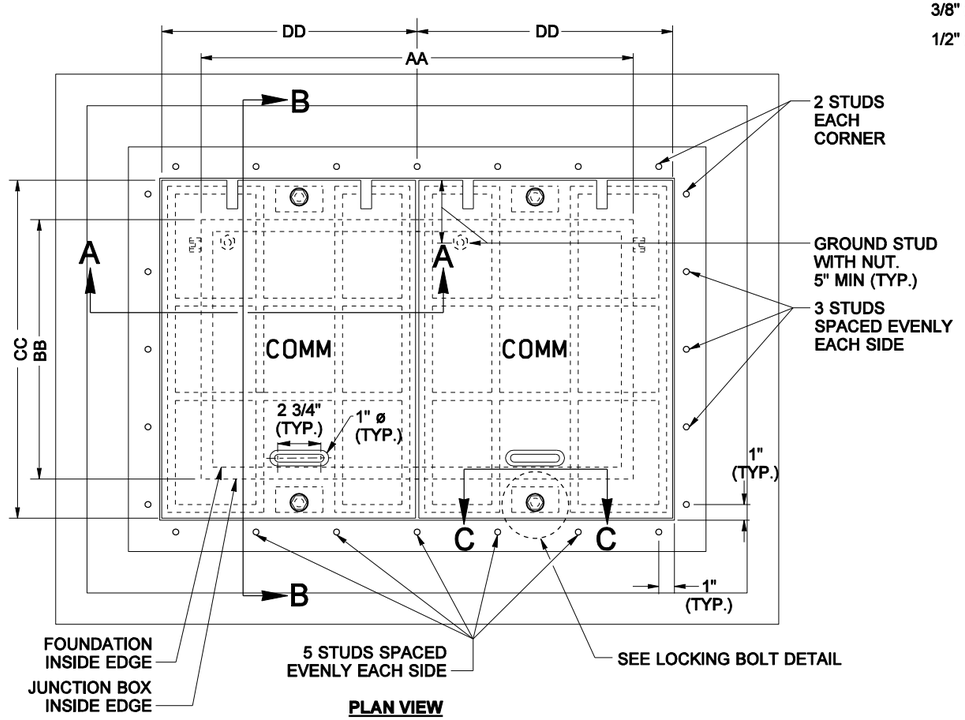

PLAN VIEW

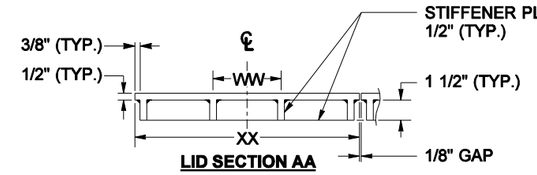

LID SECTION AA

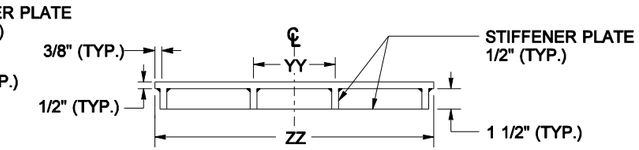

LID SECTION BB

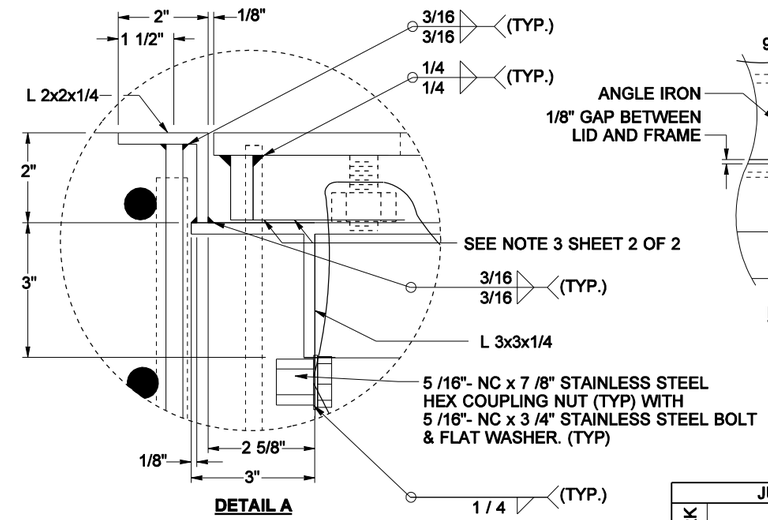

DETAIL A

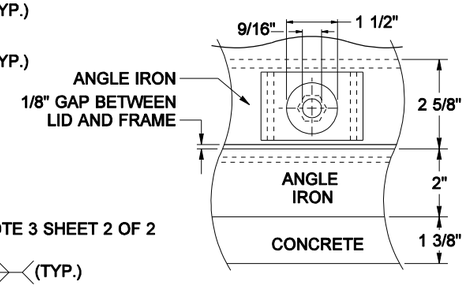

LOCKING BOLT DETAIL

JUNCTION BOX DIMENSION TABLE				
MARK	ITEM	BOX TYPE		
		4	5	6
AA	J. BOX INSIDE LENGTH	19"	28"	36"
BB	J. BOX INSIDE WIDTH	14"	17"	24"
CC	LID LENGTH (EACH SIDE)	19"	22"	29"
DD	LID WIDTH (EACH SIDE)	11 15/16"	16 7/16"	20 7/16"
WW	STIFFENER SPACING	4"	5 1/2"	6 3/4"
XX	STIFFENER LENGTH	11 15/16"	16 7/16"	20 7/16"
YY	STIFFENER SPACING	6"	7"	9 1/2"
ZZ	STIFFENER LENGTH	19"	22"	29"
CAPACITY - CONDUIT DIAMETER		6"	12"	24"

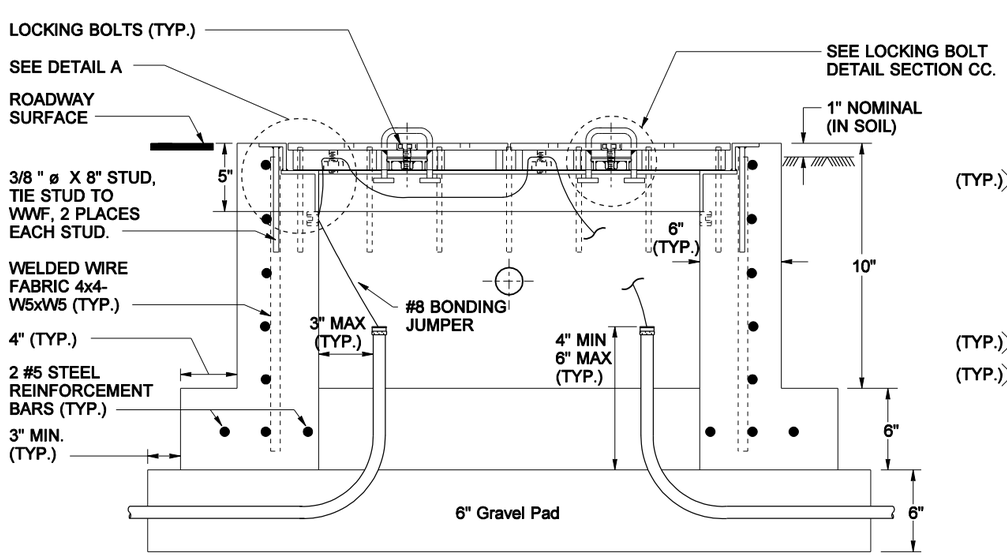

ELEVATION VIEW

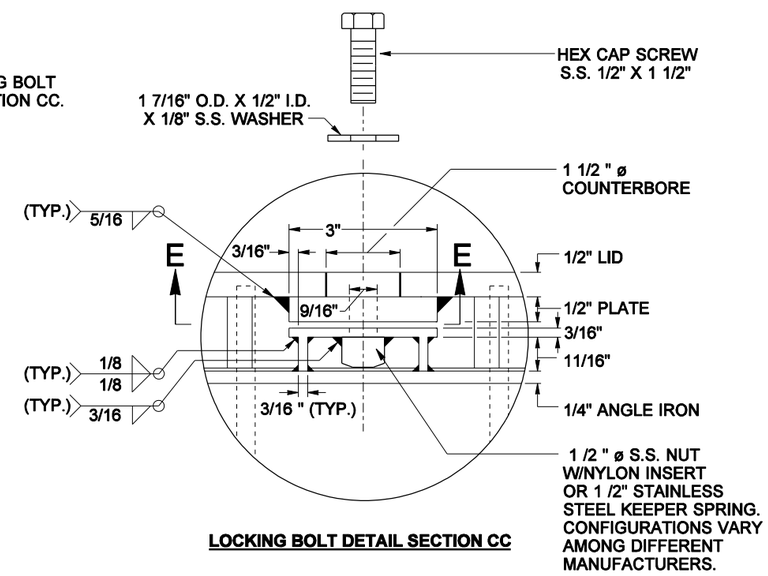

LOCKING BOLT DETAIL SECTION CC

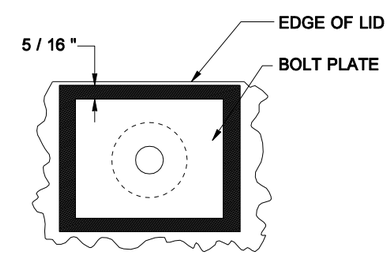

SECTION EE

HEAVY DUTY TYPE 4, 5 AND 6 JUNCTION BOX (DUAL LID)
NOT TO SCALE

FILE NAME	S:\414126\Electrical\MASTER_FILES\DETAILS V8\Heavydutyjb_e.dgn						
TIME	09:23:14 AM				REGION NO. 10	STATE WASH	FED.AID PROJ.NO.
DATE	01/12/2005				JOB NUMBER		
DESIGNED BY							
ENTERED BY		RENAME JUNCTION BOX	1-11-2005	KN			
CHECKED BY		HEX COUPLING NUT, BASE CHANGE 1"	7-9-2004	JH	CONTRACT NO.		LOCATION NO.
PROJ. ENGR.		REVISIONS TO MEET LOAD REQUIREMENTS	9-20-2001	JH			
REGIONAL ADM.		REVISION	DATE	BY			

P.E. STAMP BOX DATE

P.E. STAMP BOX DATE

Washington State Department of Transportation

ENGLISH
HEAVY DUTY JUNCTION BOX

TYPE 4, 5 & 6 JBOX

PLOT11

6.40E

SHEET 1 OF 2 SHEETS

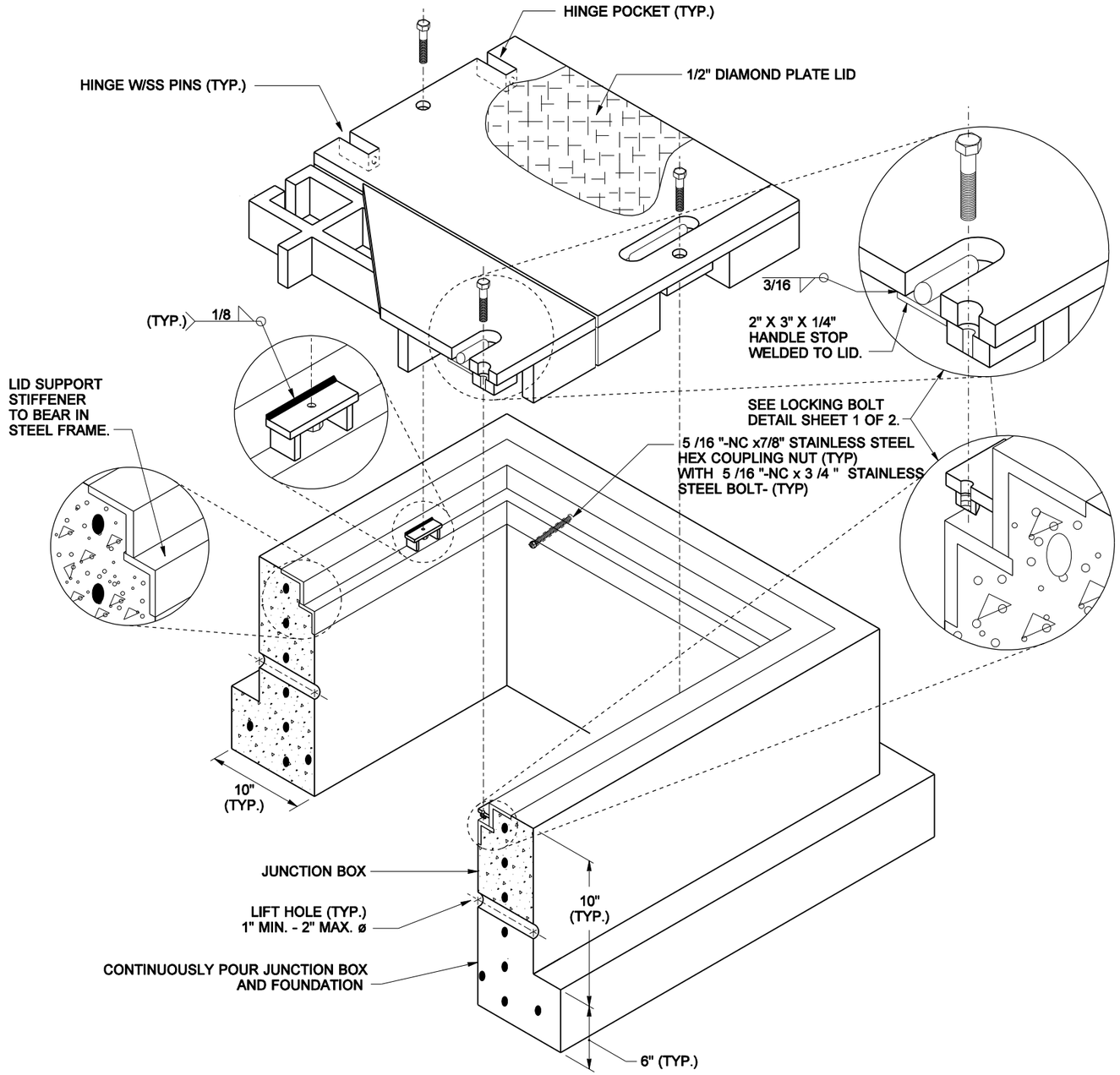

LEGEND DETAIL
MARK L

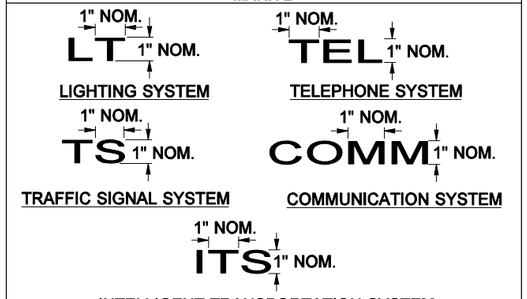

Form letters with 1/8" weld bead.
Grind off diamond pattern before forming letters.

NOTES

1. ALL BOX DIMENSIONS ARE MINIMUM. EXACT CONFIGURATIONS VARY AMONG DIFFERENT MANUFACTURERS.
2. THE NOTED LID THICKNESSES ARE OVERALL MINIMUMS. THE DIAMOND PATTERN FOR TYPE 4, 5 AND 6 BOXES SHALL BE 3 /32 " MINIMUM THICK.
3. LID STIFFENER PLATES SHALL BEAR ON FRAME. MILL TO BEAR SEAT AND PERIMETER BAR FOR FULL EVEN CONTACT AROUND PERIMETER AFTER FABRICATION OF FRAME AND LID. LID AND FRAME UNITS WITH UNEVEN BEARING WILL BE REJECTED.
4. A 1 /4 " NC X 3 /4 " S.S. GROUND STUD WITH S.S. NUT & FLAT WASHER SHALL BE WELDED TO THE BOTTOM SIDE OF EACH LID. AS AN ALTERNATIVE, THE MANUFACTURER MAY ATTACH THE BONDING JUMPER TO THE FRONT FACE OF THE HINGE POCKET WITH A 5 /16 "NC X 3 /4 " S.S. BOLT WITH S.S. NUT AND FLAT WASHER.
5. SEE STANDARD SPECIFICATIONS 9-29.2.
6. THE HINGES SHALL ALLOW THE LIDS TO OPEN 180°.
7. ALL CONCRETE SHALL BE CLASS 4000.
8. A 1% TOLERANCE IS ALLOWED FOR ALL DIMENSIONS.
9. THE INSTALLED LID AND FRAME SHALL FIT WITH FULL EVEN CONTACT AROUND THE PERIMETER AFTER INSTALLATION. CARE SHALL BE TAKEN TO PREVENT ANY DEBRIS ACCUMULATION ON THE CONTACT SURFACES.
10. BOLTS AND NUTS SHALL BE LIBERALLY COATED WITH ANTI-SEIZE COMPOUND.
11. BONDING JUMPER ARE TINNED BRAIDED COPPER - #8 AWG MINIMUM x 4 FEET.

HEAVY DUTY TYPE 4, 5 AND 6 JUNCTION BOX (DUAL LID)
NOT TO SCALE

FILE NAME	S:\414126\Electrical\MASTER_FILES\DETAILS V8\Heavydutyjb_e.dgn						
TIME	09:23:46 AM				REGION NO.	STATE	FED.AID PROJ.NO.
DATE	01/12/2005				10	WASH	
DESIGNED BY		RENAME JUNCTION BOX	1-11-2005	KN	JOB NUMBER		
ENTERED BY		HEIGHT CHNG 18" TO 10"	8-13-2004	JH			
CHECKED BY		HEX COUPLING NUT, BASE CHANGE 1"	7-9-2004	JH	CONTRACT NO.		LOCATION NO.
PROJ. ENGR.		REVISIONS TO MEET LOAD REQUIREMENTS	9-20-2001	JH			
REGIONAL ADM.		REVISION	DATE	BY			

DATE
P.E. STAMP BOX

DATE
P.E. STAMP BOX

Washington State
Department of Transportation

ENGLISH
HEAVY DUTY JUNCTION BOX

TYPE 4, 5 & 6 JBOX

PLOT12

6.41E

SHEET 2 OF 2 SHEETS

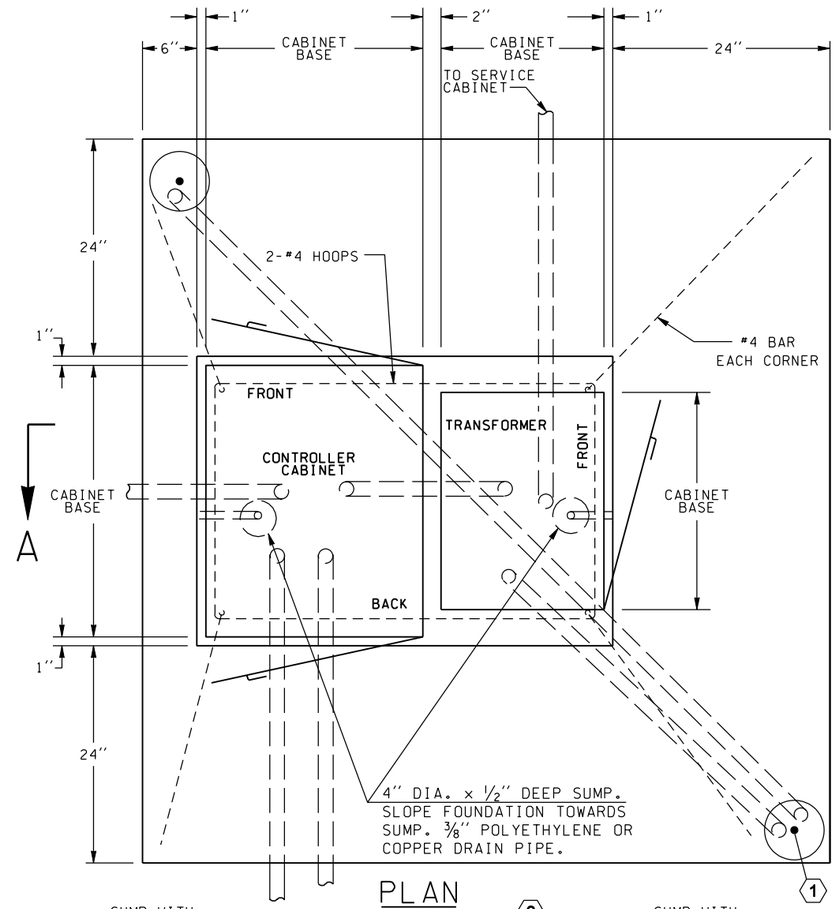

PLAN

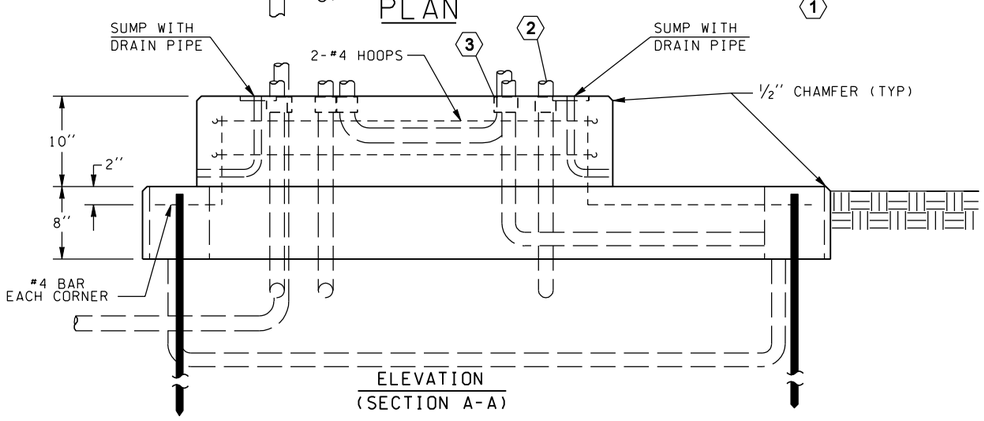

ELEVATION
(SECTION A-A)

CONTROLLER CABINET AND
TRANSFORMER ON PAD FOUNDATION

GENERAL NOTES

1. THE CABINETS SHALL BE ATTACHED TO THE FOUNDATION WITH STAINLESS STEEL CINCH BOLTS PER MANUFACTURER'S RECOMMENDATIONS. INSTALLATION SHALL BE DONE IN DRY CONDITIONS. BOLTS SHALL EXTEND A MINIMUM OF 1½" ABOVE THE CONCRETE PAD.
2. ALL REINFORCING STEEL SHALL HAVE A MINIMUM OF 2" CLEAR COVER.
3. PLACE A ½" SILICONE SEAL BETWEEN THE CABINETS AND THE FOUNDATION.
4. SEE STANDARD PLAN J-9a "TYPICAL GROUNDING DETAILS" FOR GROUNDING DETAILS. TWO GROUND RODS ARE REQUIRED.
5. INSTALL CONDUIT AS INDICATED IN PLANS. CONDUIT SHALL EXTEND 2" ABOVE THE FOUNDATION.
6. CONCRETE SHALL BE CLASS 3000.

(1) DRIVE GROUND RODS BEFORE PLACING CONCRETE. MOVE ROD(S) AND DRAIN TILE(S) WITH COVER(S) AS REQUIRED TO ACHIEVE FULL GROUND PENETRATION. MAINTAIN A 6' MINIMUM CLEARANCE BETWEEN GROUND RODS AS DETAILED ON STD. PLAN J-9a "TYPICAL GROUNDING DETAILS".

(2) ALL CONDUIT PENETRATING CABINET SHALL BE TERMINATED WITH GROUNDING END BUSHING AND BONDED TO THE CABINET GROUNDING BUS.

(3) INSTALL CONDUIT COUPLINGS ON ALL CONDUITS. PLACE COUPLINGS FLUSH WITH TOP OF CONCRETE FOUNDATION.

CONTROLLER CABINET BASE	SIZE LxW
TYPE 322	24"x32"
NEMA P44	44"x24"
TYPE 334	
TRANSFORMER	**SIZE LxW**

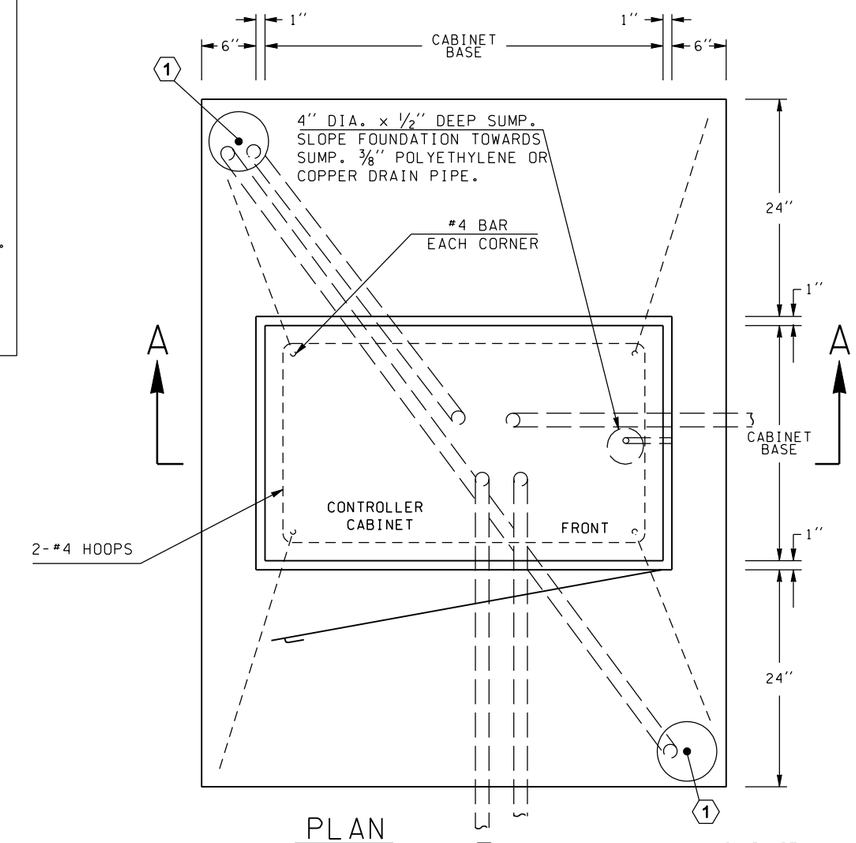

PLAN

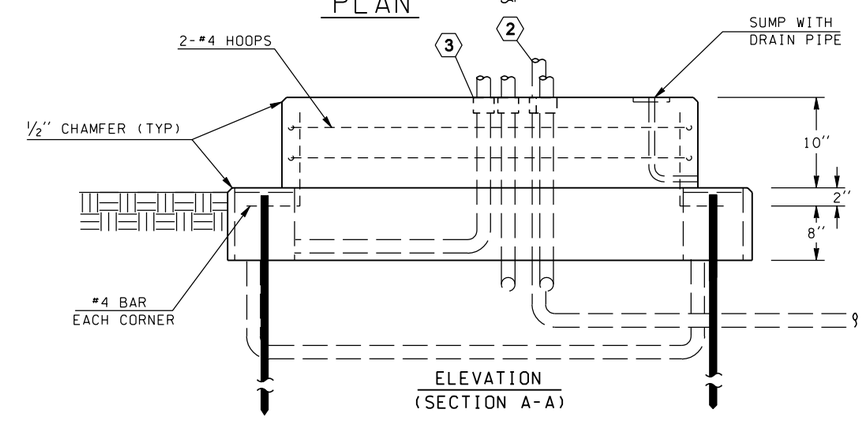

ELEVATION
(SECTION A-A)

CONTROLLER CABINET
ON PAD FOUNDATION

FILE NAME	s:\414126\Electrical\MASTER_FILES\DETAILS\CONTROL_E.DGN						
TIME	01:05:45 PM	TITLE CHNG, NOTE EDITS	11-20-02	JH	REGION NO. 10	STATE WASH	FED.AID PROJ.NO.
DATE	01/21/2003	COMBINED BOTH FOUND. DETAILS TOGETHER	10-14-02	JH			
		DGN TO SCALE, MOVED CAB	9-25-02	JH	JOB NUMBER		
DESIGNED BY		TITLE CHANGE	7-16-02	JH			
ENTERED BY		CLEAN UP DIMENSIONS	6-5-02	JH			
CHECKED BY		GENERAL NOTE #4	7-26-99	JH	CONTRACT NO.		LOCATION NO.
PROJ. ENGR.		ADDED "TYPE 322"	1-12-99	JH			
REGIONAL ADM.		REVISION	DATE	BY			

P.E. STAMP BOX DATE

P.E. STAMP BOX DATE

Washington State Department of Transportation

SIGNAL CONTROLLER CABINET AND TRANSFORMER ON PAD FOUNDATION

ENGLISH

PLOT1

8.01E

SHEET OF SHEETS

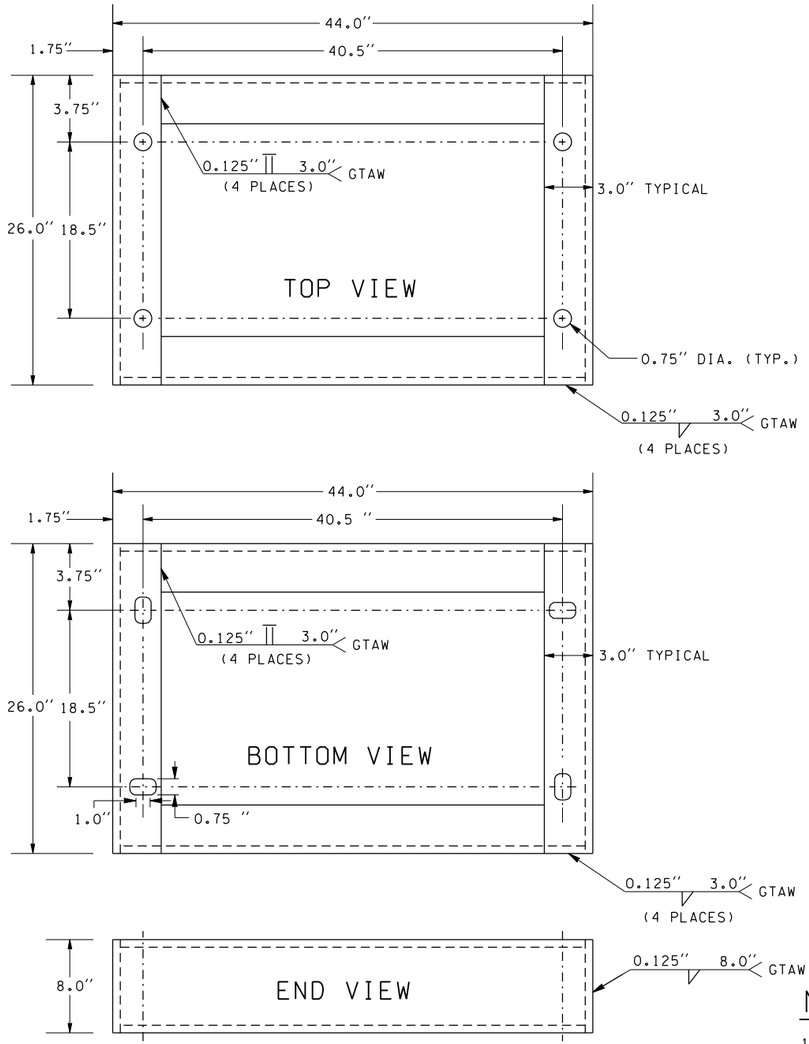

P44 RISER ADAPTER BASE

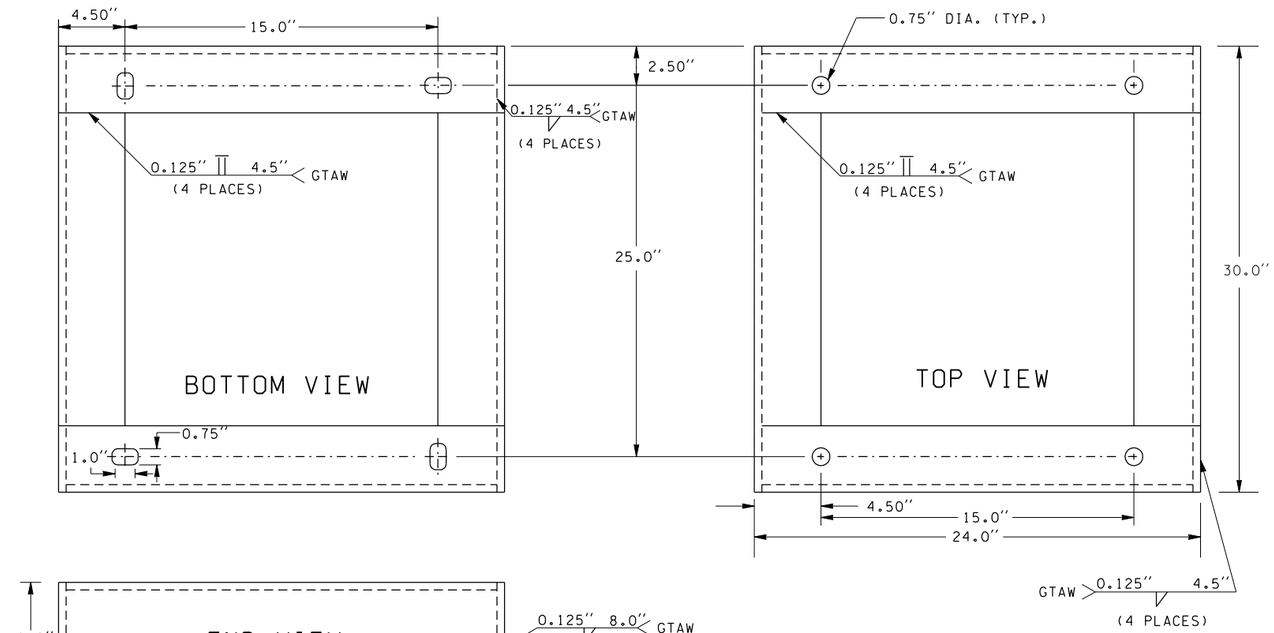

332 RISER ADAPTER BASE

NOTE:

1. FIELD VERIFY BOLT PATTERN & LOCATION PRIOR TO FABRICATION.
2. GROOVE SIZE AND FILLET SIZE ARE EQUAL TO MATERIAL THICKNESS.

* 0.125 INCH SHEET ALUMINUM (5052-H32), MINIMUM THICKNESS.

TOLERANCES

ANGLE	+/- 1 DEGREE
X.XX	= +/-0.125
HOLES	+0.005
	-0.002

GTAW = TIG WELDS

FILE NAME	S:\414126\Electrical\MASTER_FILES\DETAILS V8\Ccabinetriser.dgn						
TIME	07:26:01 AM				REGION NO. 10	STATE WASH	FED.AID PROJ.NO.
DATE	01/11/2005						
PLOTTED BY	trinhha				JOB NUMBER		
DESIGNED BY	**T. THAYER**						
ENTERED BY	**K. NGUYEN**						
CHECKED BY					CONTRACT NO.		LOCATION NO.
PROJ. ENGR.							
REGIONAL ADM.		REVISION	DATE	BY			

P.E. STAMP BOX DATE

P.E. STAMP BOX DATE

Washington State Department of Transportation

ENGLISH

CONTROLLER CABINET RISER DETAILS

PLOT1

8.20E

SHEET OF SHEETS

06/18/2008:\414126\Electrical\Web\dgn\fence_e.dgn MbuthN
PLOT1

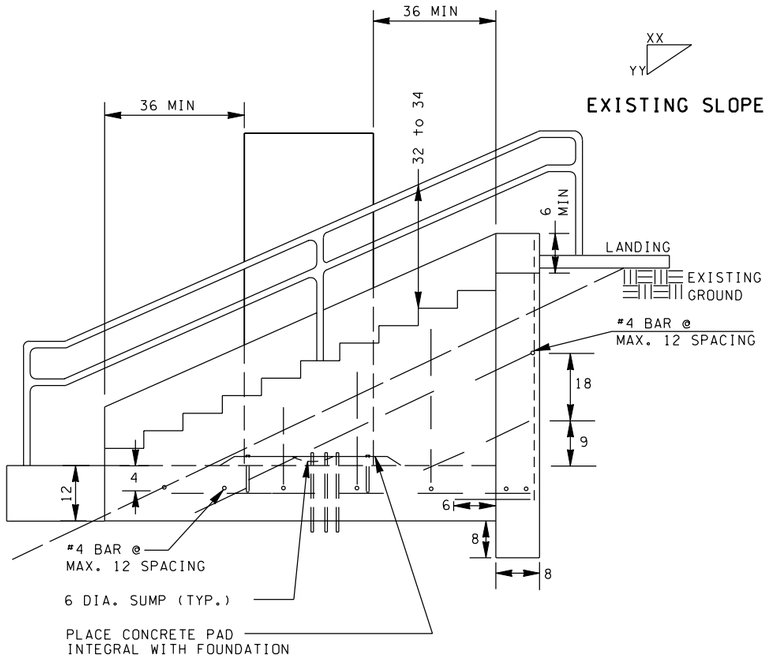

ELEVATION
(SECTION A-A)

NOTES

1. 1/2" CHAMFER ALL EXPOSED CORNERS.
2. ADJUST WALL HEIGHT TO MATCH SLOPE OF FINAL GRADE.
3. ADJUST REINFORCING FOR WALL HEIGHT.
4. FOR FENCE DETAILS SEE STANDARD PLAN L-2.
5. FOR CONCRETE STAIRWAY AND RAILING DETAILS SEE STANDARD PLAN H-10.
6. THE CABINETS SHALL BE ATTACHED TO THE FOUNDATION WITH STAINLESS STEEL CINCH BOLTS PER MANUFACTURER'S RECOMMENDATIONS. BOLT SHALL EXTEND A MINIMUM OF 1 1/2" ABOVE THE CONCRETE PAD.
7. SEAL THE CABINETS TO THE FOUNDATION WITH A 14 SILICONE BEAD.
8. FOR GROUNDING DETAILS SEE STANDARD PLAN J-9A.
9. INSTALL CONDUIT AS INDICATED IN PLANS. CONDUIT SHALL EXTEND 2" ABOVE THE FOUNDATION.
10. CONCRETE SHALL BE CLASS 3000 FOR WALLS AND BASE.
11. CONCRETE SHALL BE CLASS 4000 FOR STAIRS AND LANDINGS.

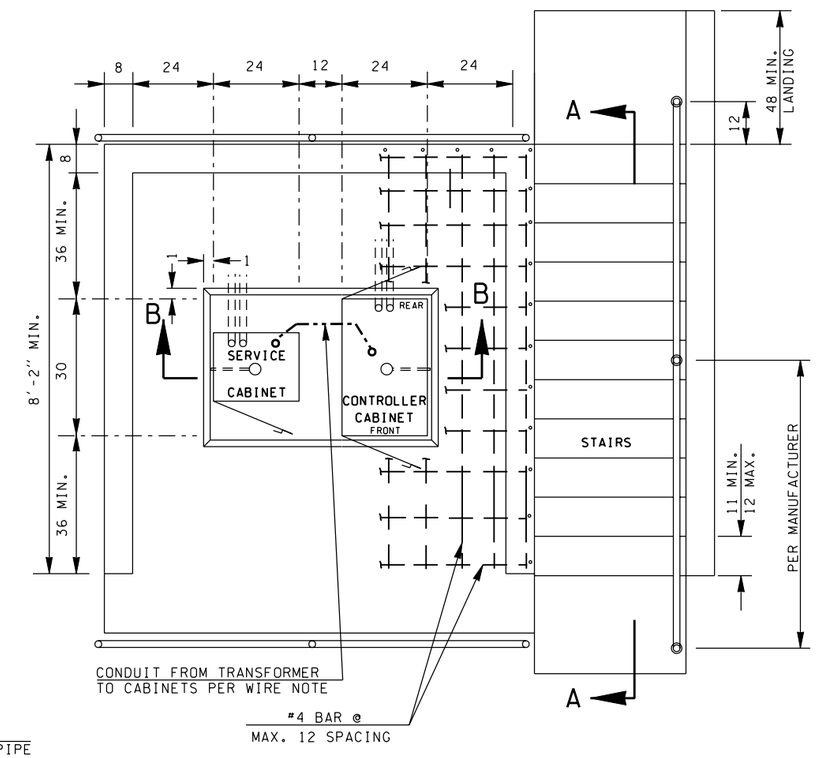

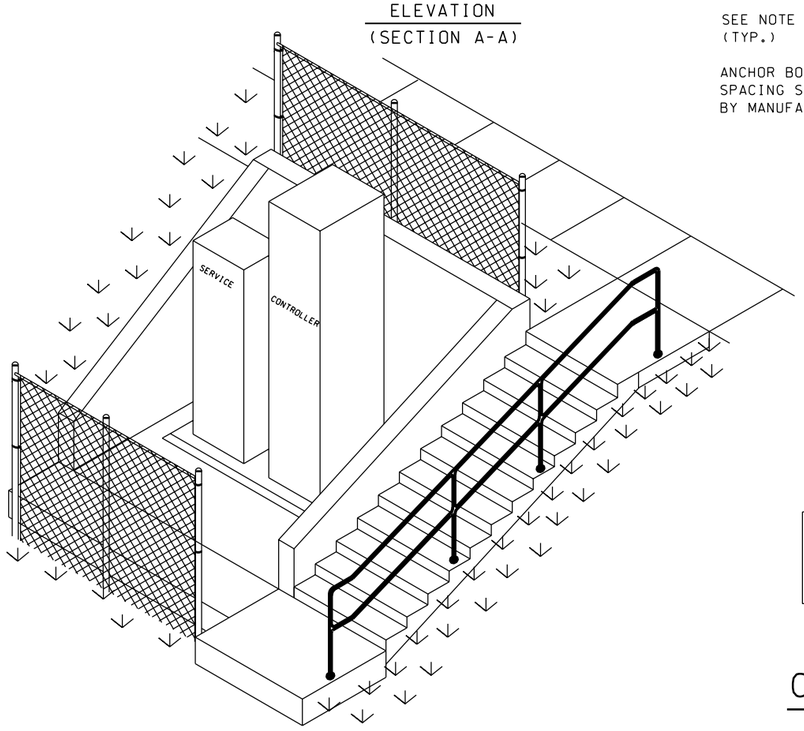

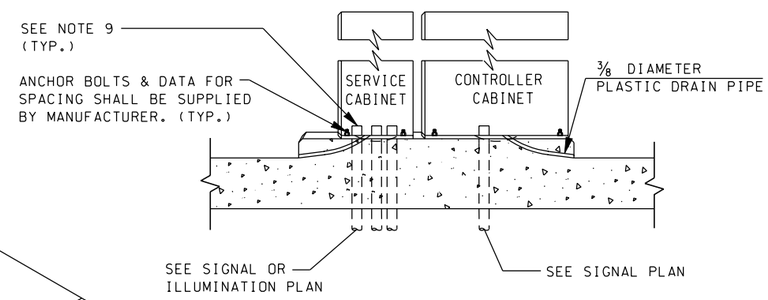

ELEVATION
(SECTION B-B)

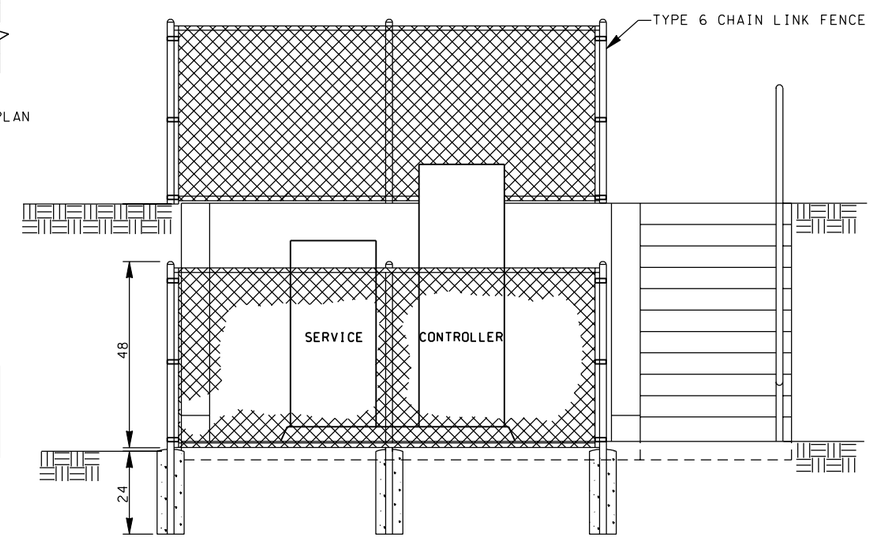

ALL DIMENSIONS ARE IN INCHES UNLESS OTHERWISE NOTED.

CONTROLLER AND SERVICE CABINET FOUNDATION DETAIL

					REGION NO.	STATE	FED.AID PROJ.NO.	
DESIGNED BY T. THAYER					10	WASH		
ENTERED BY J. HARVEY					JOB NUMBER			
CHECKED BY								
PROJ. ENGR.								
REGIONAL ADM.		3-23-00	NEW DETAIL	JH	CONTRACT NO.			
	DATE	DATE	REVISION	BY				

ENVIRONMENTAL AND ENGINEERING SERVICE CENTER

Washington State Department of Transportation

ENGLISH

CONTROLLER & SERVICE CABINET W/FENCE

8.30E

SHEET OF SHEETS

s:\414126\Electrical\Web\dgn\trenchacp_e.DGN
06/18/2002
PLOT1
MbuthN

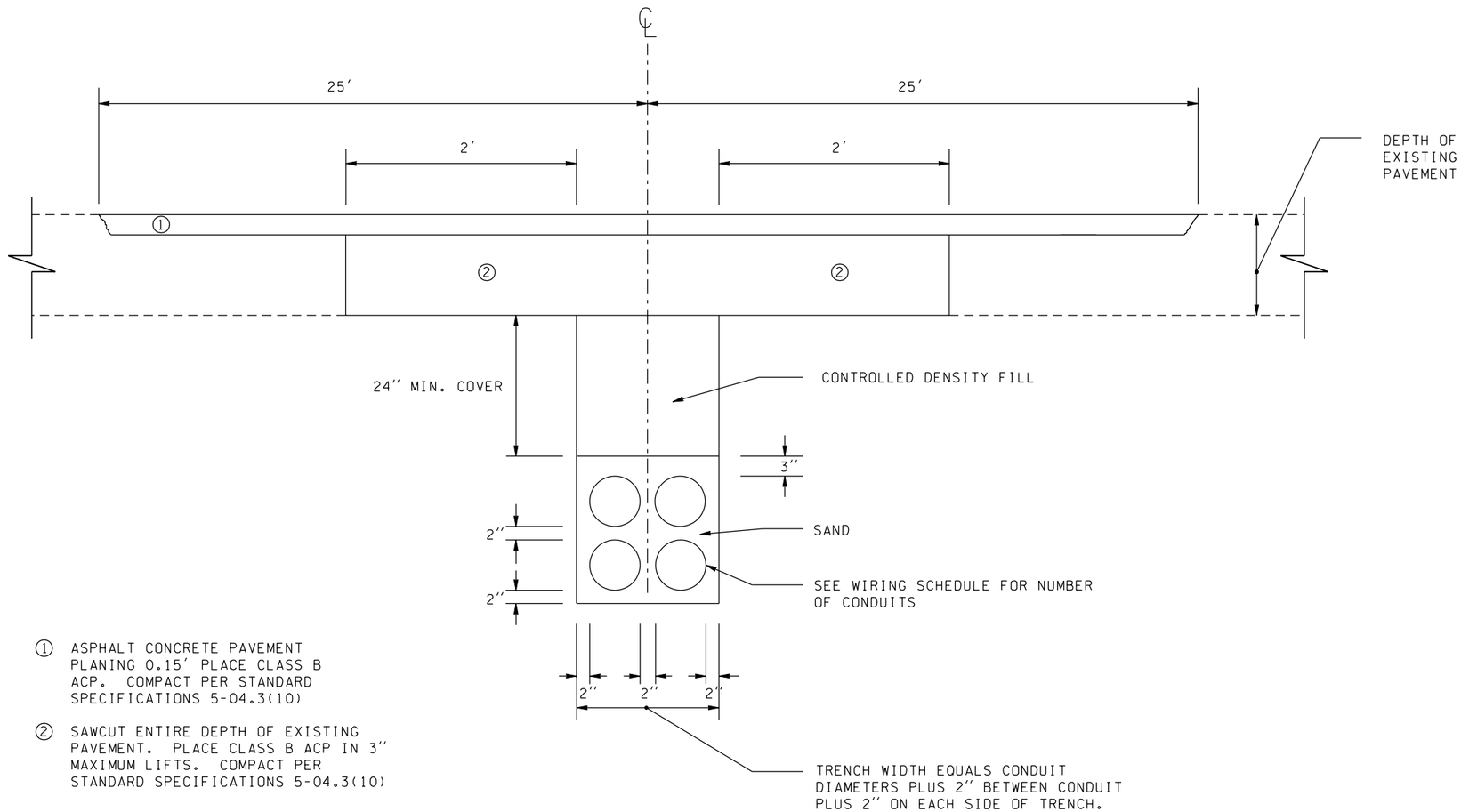

① ASPHALT CONCRETE PAVEMENT PLANING 0.15′ PLACE CLASS B ACP. COMPACT PER STANDARD SPECIFICATIONS 5-04.3(10)

② SAWCUT ENTIRE DEPTH OF EXISTING PAVEMENT. PLACE CLASS B ACP IN 3″ MAXIMUM LIFTS. COMPACT PER STANDARD SPECIFICATIONS 5-04.3(10)

TRENCHING DETAIL-ACP NO OVERLAY

(NOT TO SCALE)

					REGION NO.	STATE	FED.AID PROJ.NO.
DESIGNED BY WSDOT					10	WASH	
ENTERED BY WSDOT		2-1-99	CENTERLIN /TEXT	JH	JOB NUMBER		
CHECKED BY WSDOT		6-23-98	TRENCH DETAIL- "OVERLAY"	JH			
PROJ. ENGR.		5-19-98	TRENCH DETAIL- "ACP"	JH	CONTRACT NO.		
REGIONAL ADM.		4-25-97	"ASPHALT CONCRETE PAVEMENT"	BK			
	DATE	DATE	REVISION	BY			

ENVIRONMENTAL AND ENGINEERING SERVICE CENTER

Washington State Department of Transportation

ENGLISH

ROADWAY TRENCH DETAIL

9.01E

SHEET OF SHEETS

s:\414126\Electrical\Web\dgn\trenchacp_e.DGN 06/18/2002 PLOT2 MbuthN

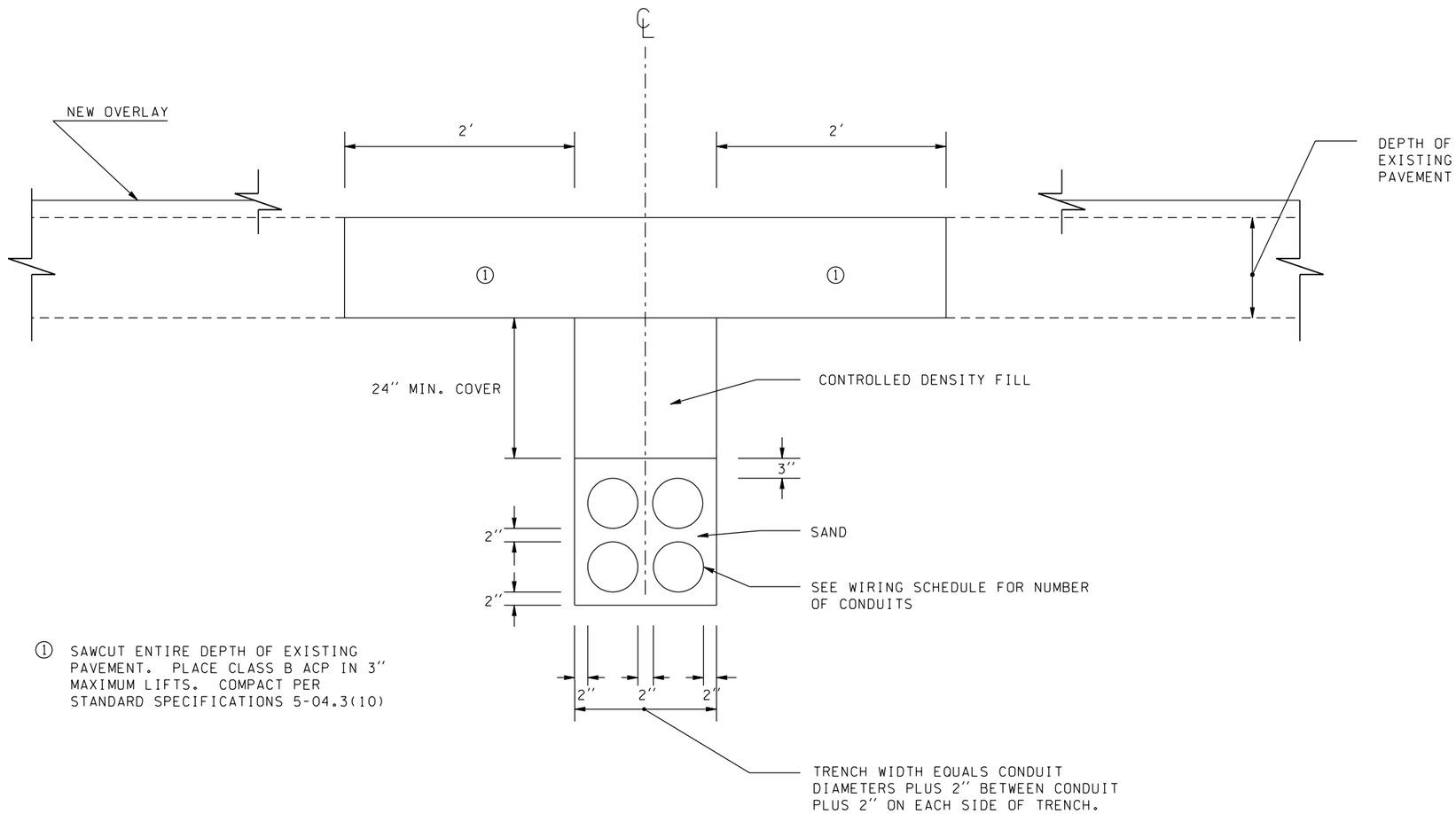

1 SAWCUT ENTIRE DEPTH OF EXISTING PAVEMENT. PLACE CLASS B ACP IN 3" MAXIMUM LIFTS. COMPACT PER STANDARD SPECIFICATIONS 5-04.3(10)

TRENCHING DETAIL-ACP OVERLAY

(NOT TO SCALE)

					REGION NO.	STATE	FED.AID PROJ.NO.	ENVIRONMENTAL AND ENGINEERING SERVICE CENTER	Washington State Department of Transportation	ENGLISH	9.02E
DESIGNED BY WSDOT					10	WASH					SHEET
ENTERED BY WSDOT											OF
CHECKED BY WSDOT		2-1-99	CENTERLINE /TEXT	JH	JOB NUMBER						SHEETS
PROJ. ENGR.		12/10/98	"NEW OVERLAY"	JH						ROADWAY TRENCH DETAIL	
REGIONAL ADM.		6-23-98	NEW DETAIL- "NO OVERLAY"	JH	CONTRACT NO.						
	DATE	DATE	REVISION	BY							

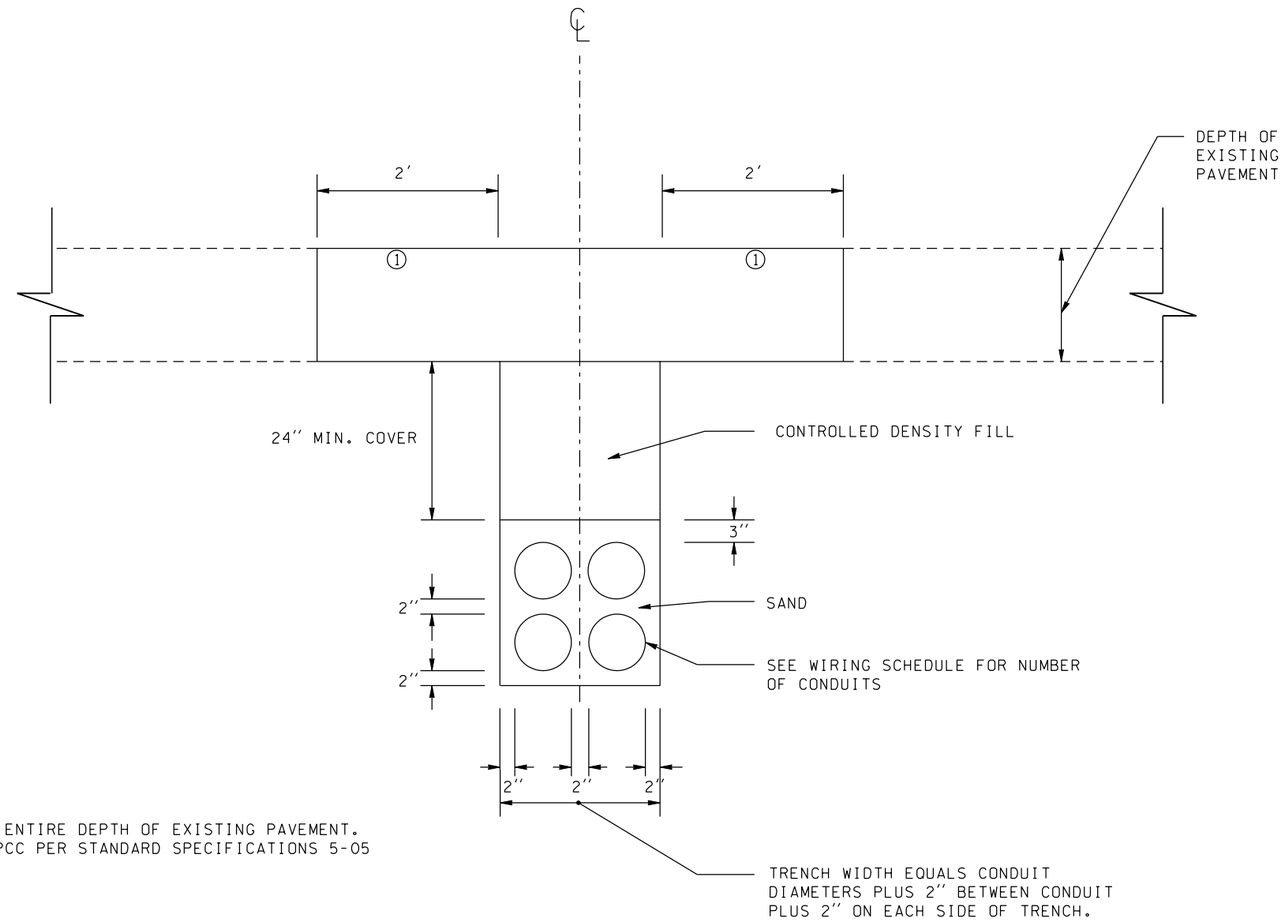

① SAWCUT ENTIRE DEPTH OF EXISTING PAVEMENT.
PLACE PCC PER STANDARD SPECIFICATIONS 5-05

TRENCHING DETAIL-PCC

(NOT TO SCALE)

					REGION NO.	STATE	FED.AID PROJ.NO.	ENVIRONMENTAL AND ENGINEERING SERVICE CENTER	Washington State Department of Transportation	ENGLISH	9.03E
DESIGNED BY WSDOT					10	WASH					
ENTERED BY WSDOT					JOB NUMBER						SHEET
CHECKED BY WSDOT	2-1-99		CENTERLINE /TEXT	JH							OF
PROJ. ENGR.	6-23-98		NEW SHEET NUMBER	JH							
REGIONAL ADM.	5-19-98		MODIFIED "ACP" TO "PCC"	JH	CONTRACT NO.					ROADWAY TRENCH DETAIL	SHEETS
	DATE	DATE	REVISION	BY							

PLOT1 06/18/2002 Q:\2414126\Electrical\Web\dgn\trenchpcc_e.DGNMbuthN

T.27N. R.4E. W.M.

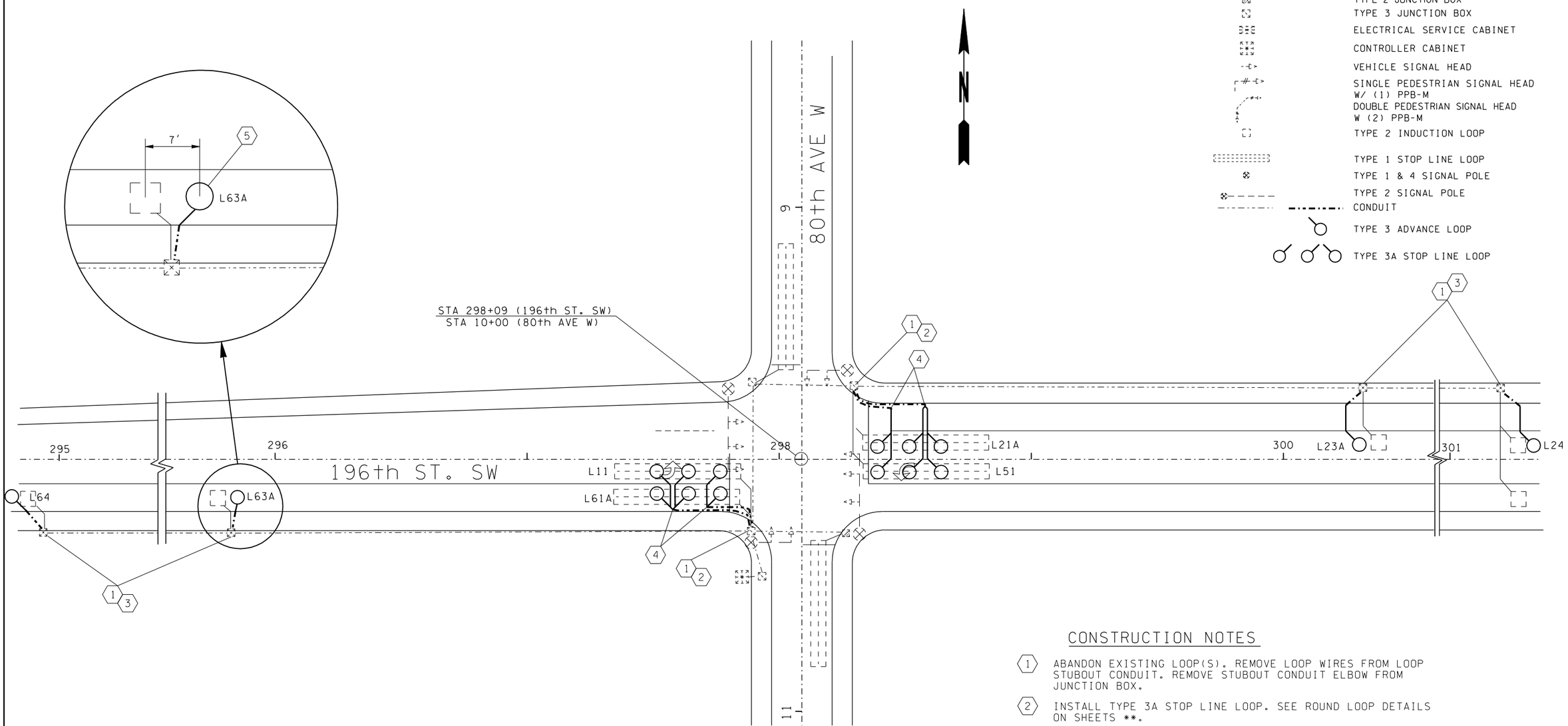

CONSTRUCTION NOTES

1. ABANDON EXISTING LOOP(S). REMOVE LOOP WIRES FROM LOOP STUBOUT CONDUIT. REMOVE STUBOUT CONDUIT ELBOW FROM JUNCTION BOX.
2. INSTALL TYPE 3A STOP LINE LOOP. SEE ROUND LOOP DETAILS ON SHEETS **.
3. INSTALL TYPE 3 ADVANCE LOOP. SEE ROUND LOOP DETAILS ON SHEETS **.
4. SAWCUT DIRECTLY TOWARD EDGE OF PAVED SHOULDER AND ROUTE LOOPWIRE THROUGH STUBOUT CONDUIT FROM THIS LOCATION TO JUNCTION BOX. SEE ROUND LOOP DETAILS FOR STUBOUT LOCATION RELATIVE TO EDGE OF PAVED SHOULDER.
5. INSTALL TYPE 3 ADVANCE LOOP IN FRONT OF OR BEHIND EXISTING LOOP ON STATION.

FILE NAME	S:\414126\Electrical\MASTER_FILES\DETAILS V8\rloopsmpl.dgn					
TIME	02:23:00 PM					
DATE	11/18/2004					
	ADDED DETAIL	11-18-04	KN			
DESIGNED BY	REVISED TYPE 3 ADVANCE LOOP	11-18-04	KN			
ENTERED BY	REVISED CONSTRUCTION NOTE AND LEGEND	11-18-04	KN			
CHECKED BY	NEW SHEET PLACEMENT	4-16-03	JH			
PROJ. ENGR.	new detail	10-7-99	JH			
REGIONAL ADM.	REVISION	DATE	BY			

REGION NO.	STATE	FED.AID PROJ.NO.
10	WASH	
JOB NUMBER		
CONTRACT NO.		LOCATION NO.

P.E. STAMP BOX DATE

P.E. STAMP BOX DATE

Washington State Department of Transportation

ROUND LOOP SAMPLE DETAIL

ENGLISH

PLOT1

11.10E

SHEET OF SHEETS

GENERAL NOTES

200 AMP TYPE 120/240 1ø SERVICE CABINET

1. SEE STANDARD SPECIFICATION 9-29.24, SERVICE CABINETS.
2. HINGES SHALL HAVE STAINLESS STEEL OR BRASS PINS.
3. CABINETS SHALL BE RATED NEMA 3R AND SHALL INCLUDE TWO RAIN TIGHT VENTS.
4. METERING EQUIPMENT DOOR SHALL BE PAD LOCKABLE. EACH DOOR SHALL BE GASKETED. INSTALL BEST CX CONSTRUCTION CORE ON RIGHT DOOR. SEE DOOR HINGE DETAIL, SHEET 1 OF 2.
5. THE FOLLOWING EQUIPMENT WITHIN THE SERVICE ENCLOSURE SHALL HAVE AN APPROPRIATELY ENGRAVED PHENOLIC NAME PLATE ATTACHED WITH SCREWS OR RIVETS: KEY NUMBERS 2, 3, 4, 6, 7, 8, 9 AND 16. KEY NUMBER 4 NAME PLATE SHALL READ: "PHOTOCELL BYPASS TEST ON" AND "PHOTOCELL TEST OFF- AUTOMATIC". SEE SERVICE CABINET DETAIL.
6. METERING ARRANGEMENTS VARY WITH DIFFERENT SERVING UTILITIES. THE UTILITY MAY REQUIRE METER BASE MOUNTING IN THE ENCLOSURE, ON THE SIDE OR ON THE BACK OF THE ENCLOSURE. THE UTILITY MAY REQUIRE THE DIMENSION BETWEEN THE DOOR AND THE FRONT OF THE SAFETY SOCKET BOX TO BE LESS THAN THE 11 INCHES SHOWN IN THE LEFT SIDE- SAFETY SOCKET BOX MOUNTING DETAIL. THE CONTRACTOR SHALL VERIFY THE SERVING UTILITY'S REQUIREMENTS PRIOR TO FABRICATION OF AND INSTALLING THE SERVICE EQUIPMENT.
7. DIMENSIONS SHOWN ARE MINIMUM AND SHALL BE ADJUSTED TO ACCOMMODATE THE VARIOUS SIZES OF EQUIPMENT INSTALLED.
8. ALL BUSSWORK SHALL BE HIGH GRADE COPPER AND SHALL EQUAL OR EXCEED THE MAIN BREAKER RATING. ALL BREAKERS SHALL BOLT ONTO THE BUSSWORK. JUMPERING OF BREAKERS SHALL NOT BE ALLOWED. BUSSWORK SHALL ACCOMMODATE ALL FUTURE EQUIPMENT AS SHOWN IN THE BREAKER SCHEDULE.
9. THE PHOTOCELL UNIT SHALL BE CENTERED IN THE PHOTOCELL ENCLOSURE TO PERMIT 360 DEGREE ROTATION OF THE PHOTOCELL WITHOUT REMOVAL OF THE PHOTOCELL UNIT OR THE PHOTOCELL ENCLOSURE.
10. ALL INTERNAL WIRE RUNS SHALL BE IDENTIFIED WITH "TO - FROM" CODED TAGS LABELED WITH THE CODE LETTERS AND/OR NUMBERS SHOWN ON THE SCHEDULES. APPROVED PVC OR POLYOLEFIN WIRE MARKING SLEEVES SHALL BE USED.
11. ALL NUTS, BOLTS AND WASHERS USED FOR MOUNTING THE PHOTOCELL ENCLOSURE SHALL BE STAINLESS STEEL.
12. A 1% TOLERANCE IS ALLOWED FOR ALL DIMENSIONS.
13. UNISTRUT TYPE CHANNEL AND MOUNTING HARDWARE COMPONENTS SHALL BE STAINLESS STEEL. CONDUIT CLAMPS SHALL BE HOT DIPPED, GALVANIZED STEEL OR STAINLESS STEEL.
14. INSTALL CONDUIT COUPLINGS ON ALL CONDUITS. PLACE COUPLINGS FLUSH WITH TOP OF CONCRETE FOUNDATION.
15. NOTE 15 HAS BEEN DELETED.
16. THE METER BASE PORTION OF THIS SERVICE WAS DESIGNED TO MEET METERING PORTION OF EUSERC DRAWING 309 REQUIREMENTS.
17. WHEN USING ALTERNATE DOOR HINGE: REMOVE HINGE PIN PRIOR TO WELDING HINGE TO CABINET AND PRIOR TO HOT DIP GALVANIZING CABINET. AFTER GALVANIZING, REPLACE PIN WITH BRASS PIN AND SOLDER IN PLACE.

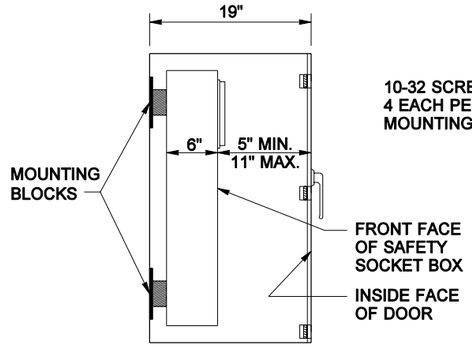

LEFT SIDE- SAFETY SOCKET BOX MOUNTING DETAIL

FABRICATE MOUNTING BLOCKS AFTER VERIFYING THE SERVICE UTILITY STAND OFF DIMENSION.

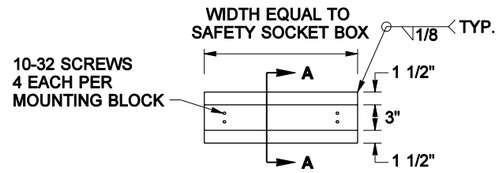

MOUNTING BLOCK DETAIL

12 GA. - MATERIAL TO BE SAME AS CABINET MATERIAL

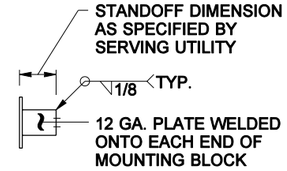

SECTION A-A

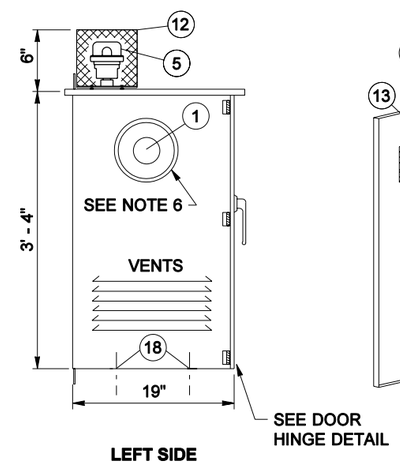

LEFT SIDE

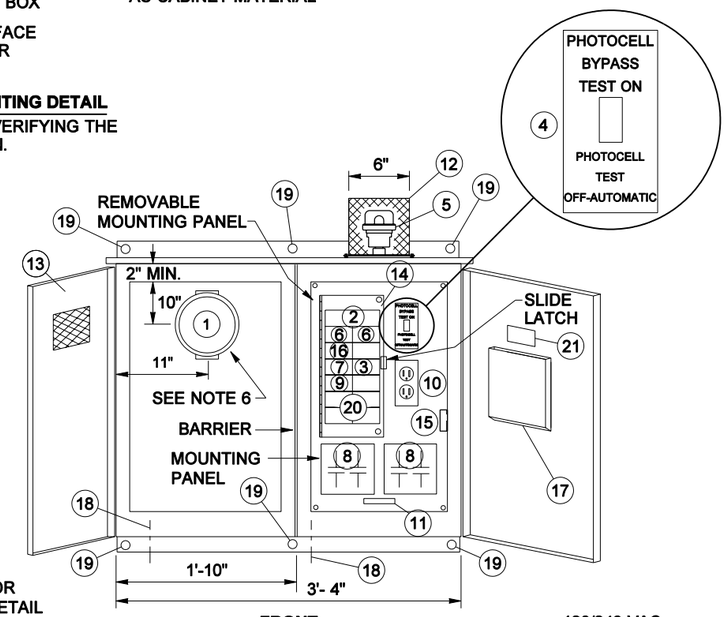

FRONT

SERVICE CABINET DETAIL

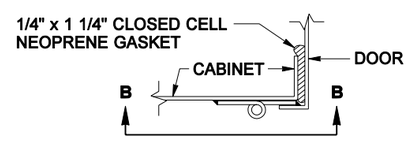

DOOR HINGE DETAIL

ALTERNATE FOR TYPE B MODIFIED CABINET SEE NOTE 17

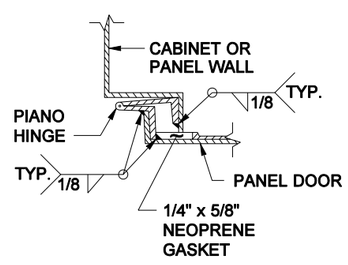

DOOR HINGE DETAIL

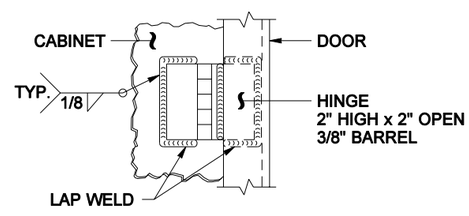

VIEW B-B

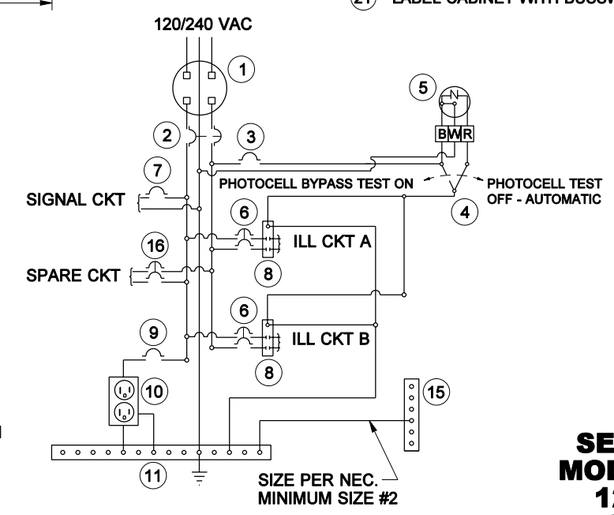

WIRING SCHEMATIC

KEY

1. METER BASE PER SERVING UTILITY REQUIREMENTS. AS A MINIMUM, THE METER BASE SHALL BE SAFETY SOCKET BOX WITH FACTORY INSTALLED TEST BYPASS FACILITY THAT MEETS THE REQUIREMENTS OF EUSERC DRAWING 305.
2. MAIN BREAKER (SEE BREAKER SCHEDULE)
3. PHOTOCELL BREAKER (SPST 15 AMP - 120/240 VOLT)
4. TEST SWITCH (SPDT SNAP ACTION, POSITIVE CLOSE 15 AMP - 120/277 VOLT - "T" RATED)
5. PHOTOELECTRIC CONTROL, STD. SPEC. 9 - 29.11(2)
6. BRANCH BREAKER (SEE BREAKER SCHEDULE)
7. SIGNAL BREAKER (SEE BREAKER SCHEDULE)
8. CONTACTOR (SEE BREAKER SCHEDULE)
9. RECEPTACLE BREAKER (SPST 20 AMP - 120/240 VOLT)
10. RECEPTACLE, GROUNDED (GFCI 20 AMP - 125 VOLT)
11. NEUTRAL BUSS, 14 LUG COPPER
12. PHOTOCELL ENCLOSURE - ENCLOSURE TO BE FABRICATED FROM 5/8" EXPANDED STEEL MESH WITH WELDED SEAMS AND MOUNTING FLANGES. HOT DIP GALVANIZED AFTER FABRICATION. TYPE 5052 - H32 ALUMINUM WITH 5/8" x 5/8" OPENINGS EQUIVALENT TO 5/8" EXPANDED STEEL MESH MAY BE USED AS ALTERNATIVE MATERIAL. SEE PHOTOCELL ENCLOSURE MOUNTING DETAIL, SHEET 2 OF 2.
13. HINGED FRONT FACING DOOR WITH 4" x 4" MIN. POLISHED WIRE GLASS WINDOW.
14. HINGED DEAD FRONT WITH 1/4 TURN FASTENERS OR SLIDE LATCH.
15. CABINET MAIN BONDING JUMPER. BUSS SHALL BE 4 LUG TINNED COPPER. SEE CABINET MAIN BONDING JUMPER DETAIL ON SHEET 2 OF 2.
16. SPARE BRANCH BREAKER (DPST 20AMP- 120/240 VOLT)
17. METAL WIRING DIAGRAM HOLDER
18. 1/4" DIAMETER DRAIN HOLE. DRILL BEFORE GALVANIZING.
19. MOUNTING HOLE. SEE SERVICE CABINET MOUNTING DETAILS.
20. 18 CIRCUIT PANEL BOARD - MINIMUM SIZE WITH SEPARATE MAIN BREAKER.
21. LABEL CABINET WITH BUSSWORK RATING.

EXPIRES MAY 5, 2005

SERVICE CABINET TYPE B MODIFIED (0 - 200 AMP TYPE 120/240 SINGLE PHASE) STANDARD PLAN J-3b

SHEET 1 OF 2 SHEETS

APPROVED FOR PUBLICATION

Harold J. Peterfeso — STATE DESIGN ENGINEER — *11-05-03* DATE

Washington State Department of Transportation

NOTE: THIS PLAN IS NOT A LEGAL ENGINEERING DOCUMENT BUT AN ELECTRONIC DUPLICATE. THE ORIGINAL, SIGNED BY THE ENGINEER AND APPROVED FOR PUBLICATION, IS KEPT ON FILE AT THE WASHINGTON STATE DEPARTMENT OF TRANSPORTATION. A COPY MAY BE OBTAINED UPON REQUEST.

DATE	REVISION	BY
09/2003	REVISED NOTE 13	MHG

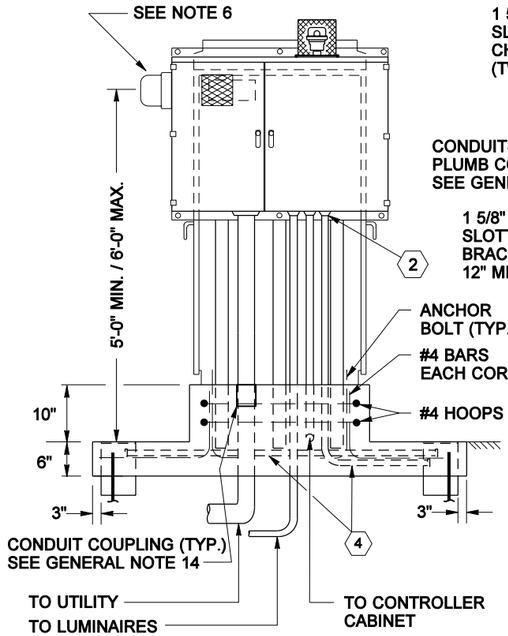

FRONT OF SERVICE CABINET

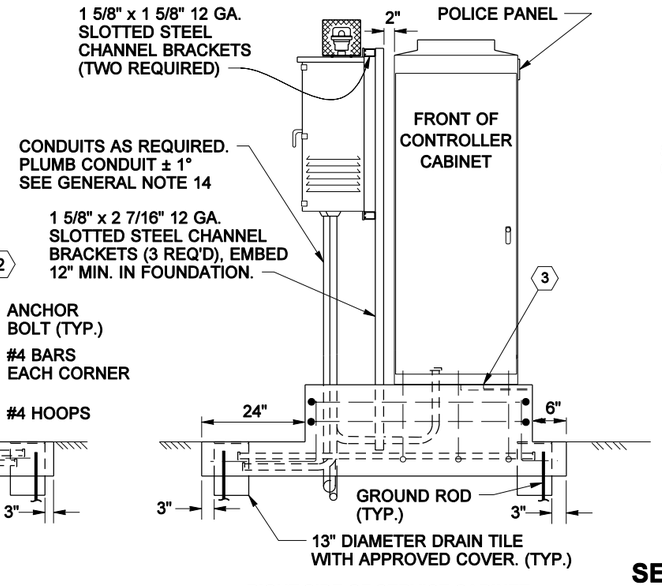

RIGHT SIDE OF SERVICE CABINET

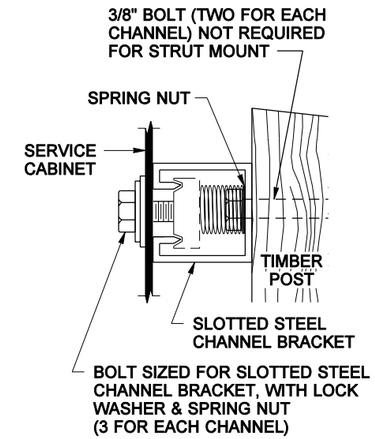

CABINET BRACKET MOUNTING DETAIL

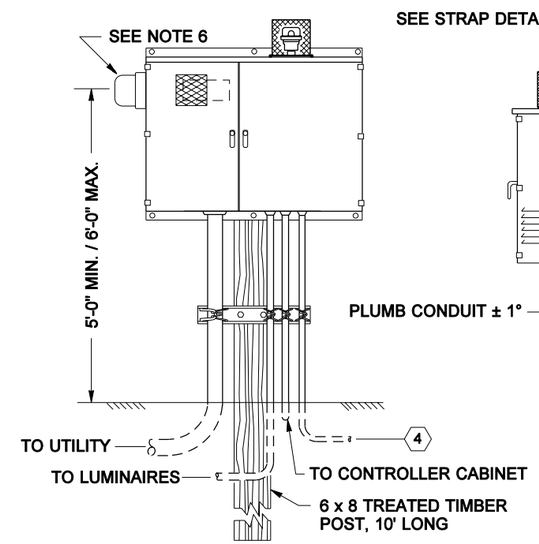

FRONT OF SERVICE CABINET

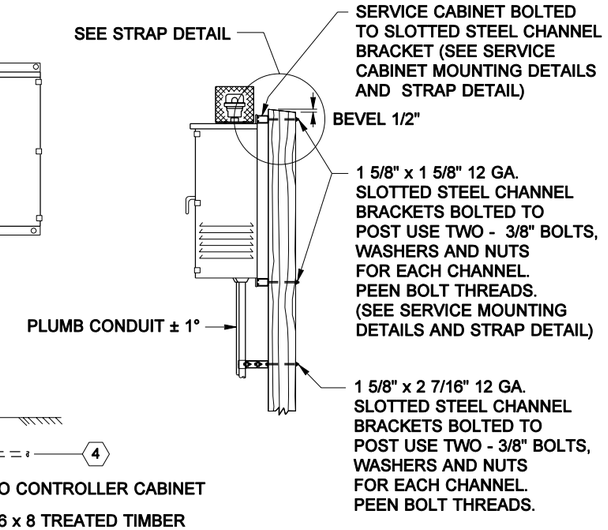

RIGHT SIDE OF SERVICE CABINET

SERVICE CABINET MOUNTING DETAILS

STRUT MOUNT

POST MOUNT

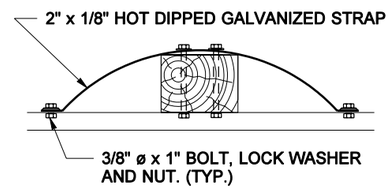

POST MOUNT STRAP DETAIL

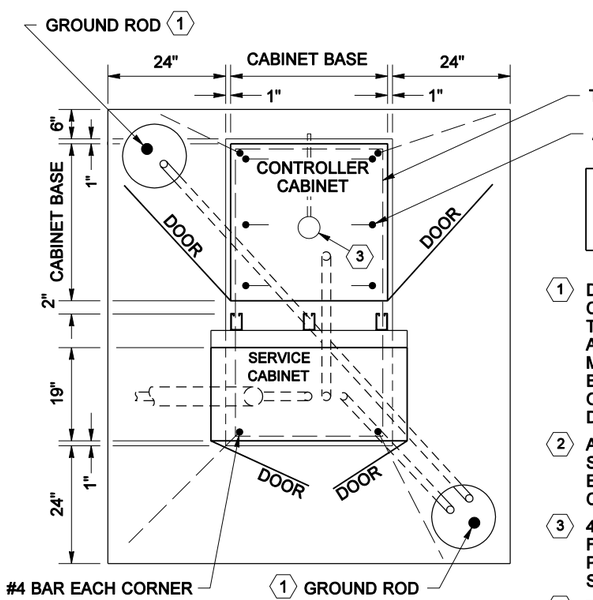

PLAN VIEW OF SERVICE CABINET

SEE STANDARD PLAN J-6c "CABINET FOUNDATION DETAILS", FOR DETAILS NOT SHOWN.

1. DRIVE GROUND RODS BEFORE PLACING CONCRETE. MOVE ROD(S) AND DRAIN TILE(S) WITH COVER(S) AS REQUIRED TO ACHIEVE FULL GROUND PENETRATION. MAINTAIN A 6' MINIMUM CLEARANCE BETWEEN GROUND RODS AS DETAILED ON STD. PLAN J-9a "TYPICAL GROUNDING DETAILS".
2. ALL CONDUITS PENETRATING CABINET SHALL BE TERMINATED WITH GROUNDING END BUSHING AND BONDED TO THE CABINET GROUNDING BUS.
3. 4" DIAM. x 1/2" DEEP SUMP. SLOPE FOUNDATION TOWARDS SUMP. 3/8" DIAM. POLYETHYLENE OR COPPER DRAIN PIPE. SLOPE TO DRAIN OUTSIDE FOUNDATION.
4. TO SERVICE GROUND - PER STD. PLAN J-9a "TYPICAL GROUNDING DETAILS"

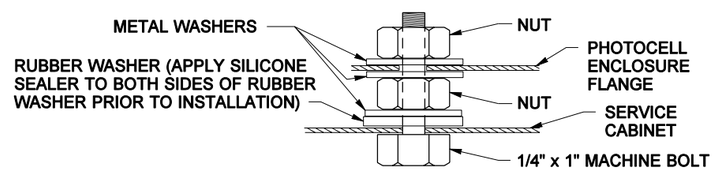

PHOTOCELL ENCLOSURE MOUNTING DETAIL

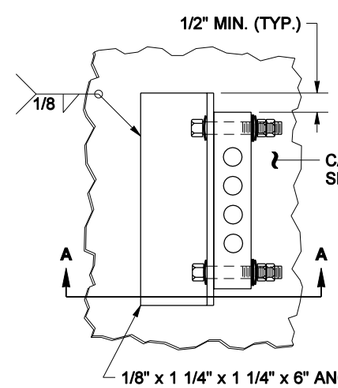

ELEVATION VIEW

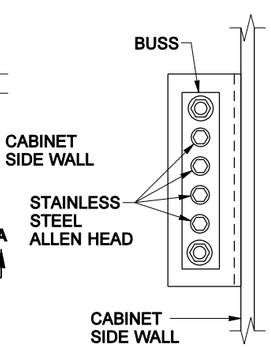

SIDE VIEW

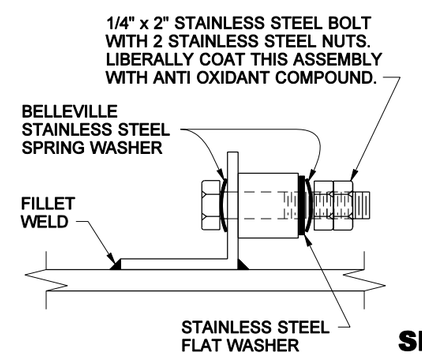

DETAIL A-A

CABINET MAIN BONDING JUMPER DETAIL

SERVICE CABINET TYPE B MODIFIED (0 - 200 AMP TYPE 120/240 SINGLE PHASE) STANDARD PLAN J-3b

SHEET 2 OF 2 SHEETS

APPROVED FOR PUBLICATION

Harold J. Peterfeso — STATE DESIGN ENGINEER — *11-05-03* DATE

Washington State Department of Transportation

NOTE: THIS PLAN IS NOT A LEGAL ENGINEERING DOCUMENT BUT AN ELECTRONIC DUPLICATE. THE ORIGINAL, SIGNED BY THE ENGINEER AND APPROVED FOR PUBLICATION, IS KEPT ON FILE AT THE WASHINGTON STATE DEPARTMENT OF TRANSPORTATION. A COPY MAY BE OBTAINED UPON REQUEST.	09/2003	REVISED SERVICE CABINET MOUNTING DETAIL	MHG
	DATE	REVISION	BY

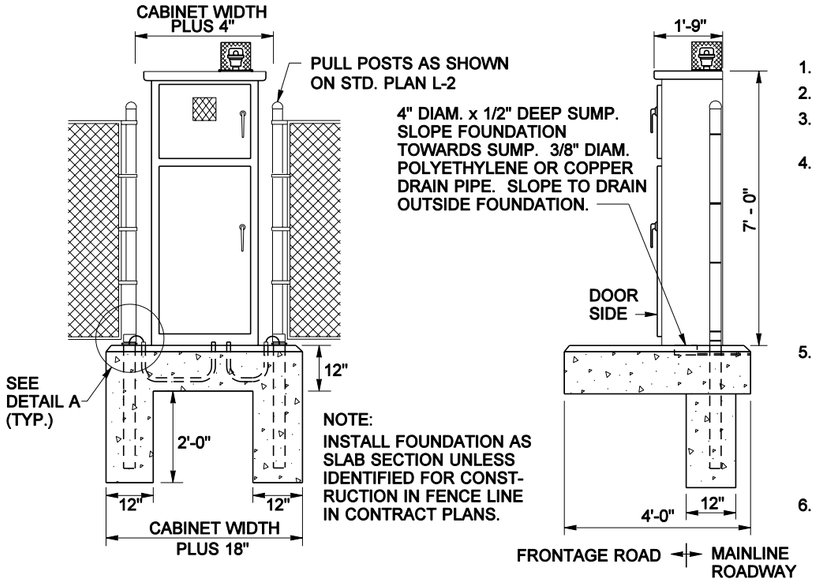

FRONT VIEW

SIDE VIEW

INSTALLATION DETAIL

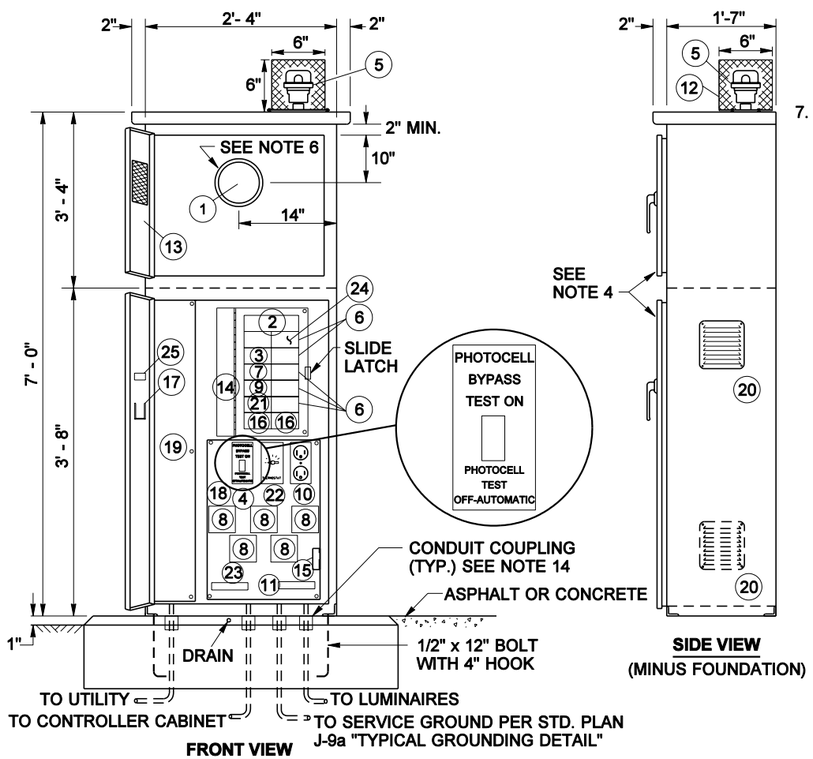

FRONT VIEW

SIDE VIEW
(MINUS FOUNDATION)

SERVICE CABINET

GENERAL NOTES

200 AMP TYPE 120/240 1ø SERVICE CABINET

1. SEE STD. SPECIFICATION 9-29.24, SERVICE CABINETS.
2. HINGES SHALL HAVE STAINLESS STEEL OR BRASS PINS.
3. CABINETS SHALL BE RATED NEMA 3R AND SHALL INCLUDE TWO RAIN TIGHT VENTS.
4. METERING EQUIPMENT DOOR SHALL BE PAD LOCKABLE. EACH DOOR SHALL BE GASKETED. INSTALL BEST CX CONSTRUCTION CORE ON BOTTOM DOOR. SEE DOOR HINGE DETAIL, STANDARD PLAN J-3b. CONCEALED HEAVY DUTY STAINLESS STEEL LIFT OFF HINGES ARE ALLOWED AS AN ALTERNATIVE TO DOOR HINGE DETAIL SHOWN ON STANDARD PLAN J-3b. UPPER DOOR SHALL HAVE 2 HINGES AND LOWER DOOR SHALL HAVE 3 HINGES. THE LOWER DOOR SHALL HAVE A TWO POSITION DOOR STOP ASSEMBLY.
5. THE FOLLOWING EQUIPMENT WITHIN THE SERVICE ENCLOSURE SHALL HAVE AN APPROPRIATELY ENGRAVED PHENOLIC NAME PLATE ATTACHED WITH SCREWS OR RIVETS:
   KEY NUMBERS 2, 3, 4, 6, 7, 8, 9, 16 AND 21.
   KEY NUMBER 4 NAME PLATE SHALL READ:
   "PHOTOCELL BYPASS TEST ON" AND "PHOTOCELL TEST OFF- AUTOMATIC". SEE SERVICE CABINET DETAIL.
6. METERING ARRANGEMENTS VARY WITH DIFFERENT SERVING UTILITIES. THE UTILITY MAY REQUIRE METER BASE MOUNTING IN THE ENCLOSURE, ON THE SIDE OR ON THE BACK OF THE ENCLOSURE. THE UTILITY MAY REQUIRE THE DIMENSION BETWEEN THE DOOR AND THE FRONT OF THE SAFETY SOCKET BOX TO BE LESS THAN THE 11 INCHES SHOWN IN THE LEFT SIDE- SAFETY SOCKET BOX MOUNTING DETAIL. SEE STANDARD PLAN J-3b FOR SAFETY SOCKET BOX DETAIL. THE CONTRACTOR SHALL VERIFY THE SERVING UTILITY'S REQUIREMENTS PRIOR TO FABRICATION OF AND INSTALLING THE SERVICE EQUIPMENT.
7. DIMENSIONS SHOWN ARE MINIMUM AND SHALL BE ADJUSTED TO ACCOMMODATE THE VARIOUS SIZES OF EQUIPMENT INSTALLED.
8. ALL BUSSWORK SHALL BE HIGH GRADE COPPER AND SHALL EQUAL OR EXCEED THE MAIN BREAKER RATING. ALL BREAKERS SHALL BOLT ONTO THE BUSSWORK. JUMPERING OF BREAKERS SHALL NOT BE ALLOWED. BUSSWORK SHALL ACCOMMODATE ALL FUTURE EQUIPMENT AS SHOWN IN THE BREAKER SCHEDULE.
9. THE PHOTOCELL UNIT SHALL BE CENTERED IN THE PHOTOCELL ENCLOSURE TO PERMIT 360 DEGREE ROTATION OF THE PHOTOCELL WITHOUT REMOVAL OF THE PHOTOCELL UNIT OR PHOTOCELL ENCLOSURE.
10. ALL INTERNAL WIRE RUNS SHALL BE IDENTIFIED WITH "TO - FROM" CODED TAGS LABELED WITH THE CODE LETTERS AND/OR NUMBERS SHOWN ON THE SCHEDULES. APPROVED PVC OR POLYOLEFIN WIRE MARKING SLEEVES SHALL BE USED.
11. ALL NUTS, BOLTS AND WASHERS USED FOR MOUNTING THE PHOTOCELL ENCLOSURE SHALL BE STAINLESS STEEL.
12. A 1% TOLERANCE IS ALLOWED FOR ALL DIMENSIONS.
13. THE PHOTOCELL CIRCUIT SHALL BE INSTALLED IN FLEX CONDUIT WITHIN THE METER COMPARTMENT.
14. INSTALL CONDUIT COUPLINGS ON ALL CONDUITS. PLACE COUPLINGS FLUSH WITH TOP OF CONCRETE FOUNDATION.
15. SEE PLANS FOR BREAKER SCHEDULE.
16. SEAL CABINET TO FOUNDATION WITH A 1/2" BEAD OF SILICONE. APPLY SILICONE TO DRY SURFACE ONLY.
17. THE METER BASE PORTION OF THIS SERVICE WAS DESIGNED TO MEET METERING PORTION OF EUSERC DRAWING 309 REQUIREMENTS.

KEY

1. METER BASE PER SERVING UTILITY REQUIREMENTS. AS A MINIMUM, THE METER BASE SHALL BE SAFETY SOCKET BOX WITH FACTORY INSTALLED TEST BYPASS FACILITY THAT MEETS THE REQUIREMENTS OF EUSERC DRAWING 305.
2. MAIN BREAKER (SEE BREAKER SCHEDULE)
3. PHOTOCELL BREAKER (SPST 15 AMP - 120/240 VOLT)
4. TEST SWITCH (SPDT SNAP ACTION, POSITIVE CLOSE, 15 AMP - 120/277 VOLT "T" RATED)
5. PHOTOELECTRIC CONTROL, STD. SPEC. 9 - 29.11(2)
6. BRANCH BREAKER (SEE BREAKER SCHEDULE)
7. SIGNAL BREAKER (SEE BREAKER SCHEDULE)
8. CONTACTOR (SEE BREAKER SCHEDULE)
9. RECEPTACLE BREAKER (SPST 20 AMP - 120/240 VOLT)
10. RECEPTACLE, GROUNDED (GFCI 20 AMP - 125 VOLT)
11. NEUTRAL BUSS, 14 LUG COPPER
12. PHOTOCELL ENCLOSURE - ENCLOSURE TO BE FABRICATED FROM 5/8" EXPANDED STEEL MESH WITH WELDED SEAMS AND MOUNTING FLANGES. HOT DIP GALVANIZED AFTER FABRICATION. TYPE 5052 - H32 ALUMINUM WITH 5/8" x 5/8" OPENINGS EQUIVALENT TO 5/8" EXPANDED STEEL MESH MAY BE USED AS ALTERNATIVE MATERIAL. SEE PHOTOCELL ENCLOSURE MOUNTING DETAILS, STANDARD PLAN J-3b.
13. HINGED FRONT FACING DOOR WITH 4" x 4" MIN. POLISHED WIRE GLASS WINDOW.
14. HINGED DEAD FRONT WITH 1/4 TURN FASTENERS OR SLIDE LATCH.
15. CABINET MAIN BONDING JUMPER. BUSS SHALL BE 4 LUG TINNED COPPER. SEE CABINET MAIN BONDING JUMPER DETAIL, STANDARD PLAN J-3b.
16. SPARE BRANCH BREAKER (DPST 20AMP- 120/240 VOLT)
17. METAL WIRING DIAGRAM HOLDER
18. REMOVABLE EQUIPMENT MOUNTING PAN
19. 6" x 6" MIN. UNDERGROUND FEED - SERVICE WIREWAY (LEFT REAR CORNER)
20. SCREENED VENTS, 2 REQUIRED, 1 EACH SIDE, LOUVERED PLATES.
21. HEATER BREAKER (SPST 15 AMP - 120/240 VOLT)
22. THERMOSTAT, 40°F CLOSURE - 3 DIFFERENTIAL
23. STRIP HEATER (100 WATT NOMINAL) , WITH TERMINAL STRIP COVER.
24. 24 CIRCUIT PANEL BOARD - MINIMUM SIZE WITH SEPARATE MAIN BREAKER.
25. LABEL CABINET WITH BUSSWORK RATING.

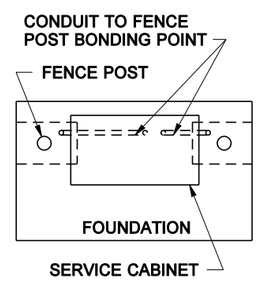

PLAN VIEW

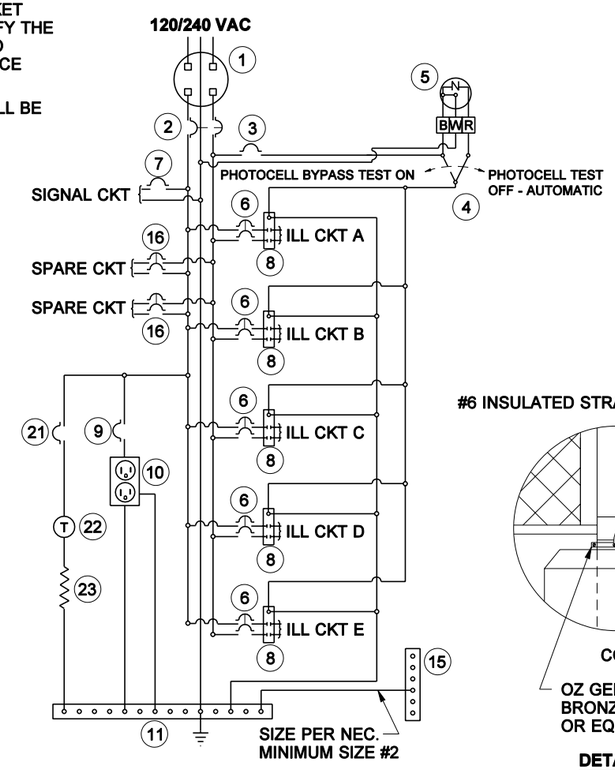

WIRING SCHEMATIC

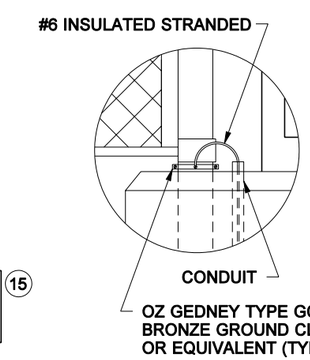

DETAIL A

R. SCOTT ZELLER
STATE OF WASHINGTON
28680
REGISTERED
PROFESSIONAL ENGINEER

EXPIRES MAY 5, 2003

SERVICE CABINET TYPE D (0 - 200 AMP TYPE 120/240 SINGLE PHASE) STANDARD PLAN J-3c

SHEET 1 OF 1 SHEET

APPROVED FOR PUBLICATION

Harold J. Peterfeso — STATE DESIGN ENGINEER

06-24-02 — DATE

Washington State Department of Transportation

DOWNLOAD CAD

NOTE: THIS PLAN IS NOT A LEGAL ENGINEERING DOCUMENT BUT AN ELECTRONIC DUPLICATE. THE ORIGINAL, SIGNED BY THE ENGINEER AND APPROVED FOR PUBLICATION, IS KEPT ON FILE AT THE WASHINGTON STATE DEPARTMENT OF TRANSPORTATION. A COPY MAY BE OBTAINED UPON REQUEST.

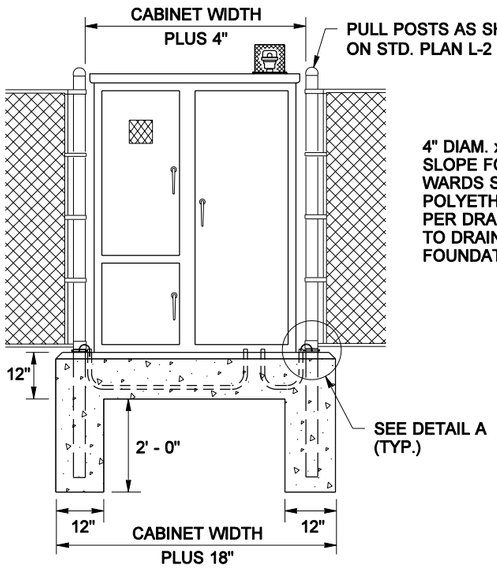

FRONT VIEW

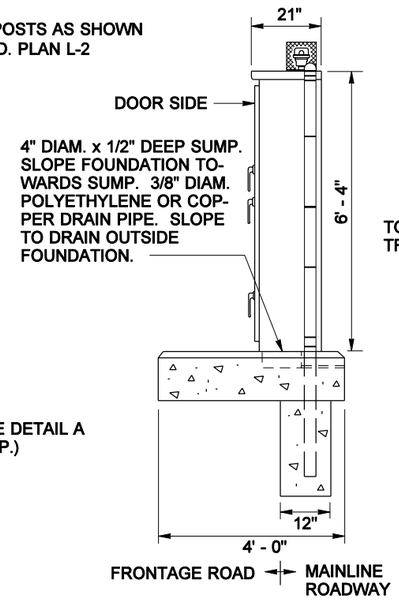

SIDE VIEW

NOTE: INSTALL FOUNDATION AS SLAB SECTION UNLESS IDENTIFIED FOR CONSTRUCTION IN FENCE LINE IN CONTRACT PLANS.

INSTALLATION DETAIL

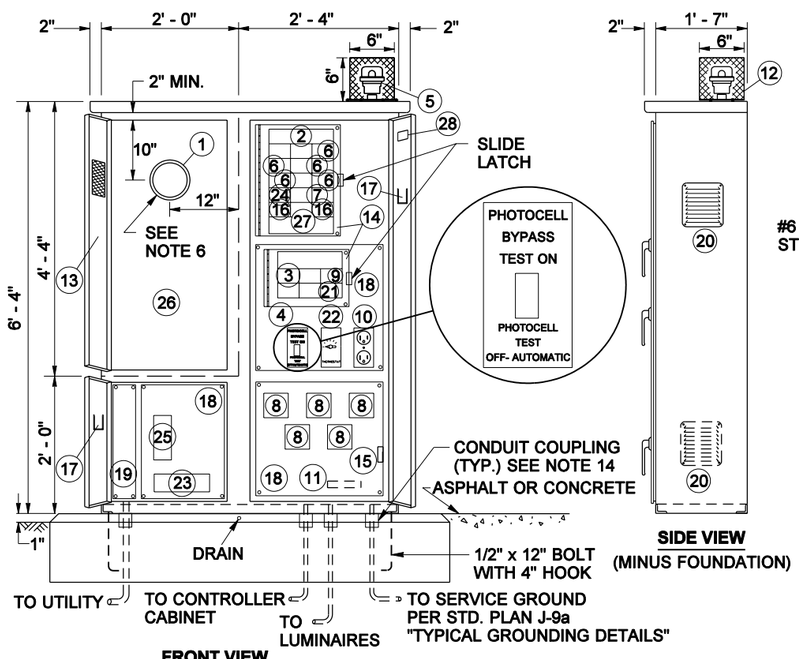

FRONT VIEW **SERVICE CABINET**

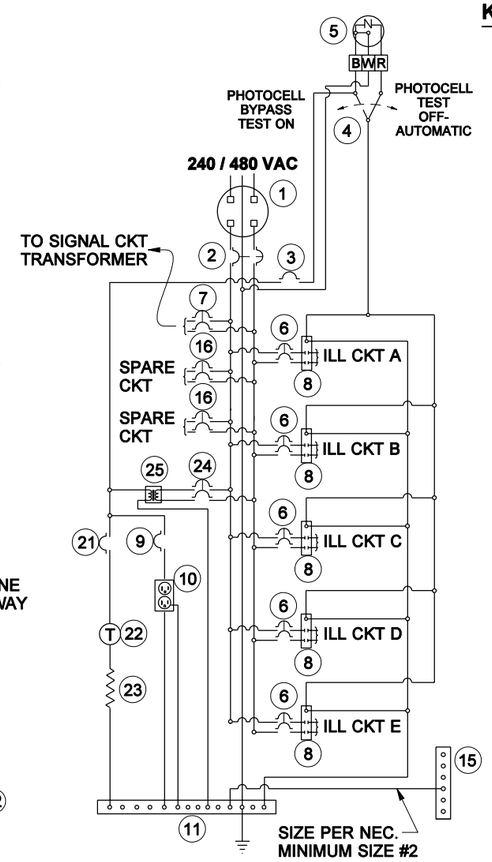

WIRING SCHEMATIC

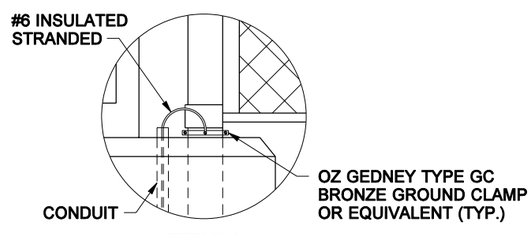

DETAIL A

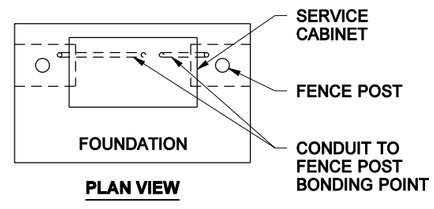

PLAN VIEW

KEY

1. METER BASE PER SERVING UTILITY REQUIREMENTS. AS A MINIMUM, THE METER BASE SHALL BE SAFETY SOCKET BOX WITH FACTORY INSTALLED TEST BYPASS FACILITY THAT MEETS THE REQUIREMENTS OF EUSERC DRAWING 305.
2. MAIN BREAKER (SEE BREAKER SCHEDULE)
3. PHOTOCELL BREAKER (SPST 15 AMP - 120/240 VOLT)
4. TEST SWITCH (SPDT SNAP ACTION, POSITIVE CLOSE 15 AMP - 120/277 VOLT "T" RATED)
5. PHOTOELECTRIC CONTROL, STD. SPEC. 9 - 29.11(2)
6. BRANCH BREAKER (SEE BREAKER SCHEDULE)
7. SIGNAL TRANSFORMER BREAKER (SEE BREAKER SCHEDULE)
8. CONTACTOR (SEE BREAKER SCHEDULE)
9. RECEPTACLE BREAKER (SPST 20 AMP - 120/240 VOLT)
10. RECEPTACLE, GROUNDED (GFCI 20 AMP - 125 VOLT)
11. NEUTRAL BUSS, 14 LUG COPPER
12. PHOTOCELL ENCLOSURE - ENCLOSURE TO BE FABRICATED FROM 5/8" EXPANDED STEEL MESH WITH WELDED SEAMS AND MOUNTING FLANGES. HOT DIP GALVANIZED AFTER FABRICATION. TYPE 5052 - H32 ALUMINUM WITH 5/8" x 5/8" OPENINGS EQUIVALENT TO 5/8" EXPANDED STEEL MESH MAY BE USED AS ALTERNATIVE MATERIAL. SEE PHOTOCELL ENCLOSURE MOUNTING DETAILS, STANDARD PLAN J-3b.
13. HINGED FRONT FACING DOOR WITH 4" x 4" MIN. POLISHED WIRE GLASS WINDOW.
14. HINGED DEAD FRONT WITH 1/4 TURN FASTENERS OR SLIDE LATCH
15. CABINET MAIN BONDING JUMPER. BUSS SHALL BE 4 LUG TINNED COPPER. SEE CABINET MAIN BONDING JUMPER DETAIL, STANDARD PLAN J-3b.
16. SPARE BRANCH BREAKER (DPST 20AMP- 240/480 VOLT)
17. METAL WIRING DIAGRAM HOLDER
18. REMOVABLE EQUIPMENT MOUNTING PAN
19. 6" x 6" MIN. UNDERGROUND FEED - SERVICE WIREWAY (LEFT REAR CORNER)
20. SCREENED VENTS, 2 REQUIRED, 1 EACH SIDE, LOUVERED PLATES
21. HEATER BREAKER (SPST 15 AMP - 120/240 VOLT)
22. THERMOSTAT, 40°F CLOSURE - 3 DIFFERENTIAL
23. STRIP HEATER (100 WATT NOMINAL), WITH TERMINAL STRIP COVER
24. TRANSFORMER BREAKER (DPST 15 AMP - 480 VOLT)
25. DRY TRANSFORMER (480/120 VOLT) 3 KVA COPPER BUSSED AND COPPER WOUND
26. RESERVED FOR METER, CURRENT TRANSFORMER AND/OR DISCONNECT SWITCH AS REQUIRED BY THE UTILITY
27. 24 CIRCUIT PANEL BOARD - MINIMUM SIZE WITH SEPARATE MAIN BREAKER.
28. LABEL CABINET WITH BUSSWORK RATING

GENERAL NOTES

200 AMP TYPE 240/480 1ø SERVICE CABINET

1. SEE STD. SPECIFICATION 9-29.24, SERVICE CABINETS.
2. HINGES SHALL HAVE STAINLESS STEEL OR BRASS PINS.
3. CABINETS SHALL BE RATED NEMA 3R AND SHALL INCLUDE TWO RAIN TIGHT VENTS.
4. METERING EQUIPMENT DOORS SHALL BE PAD LOCKABLE. EACH DOOR SHALL BE GASKETED. INSTALL BEST CX CONSTRUCTION CORE ON BOTTOM LEFT AND RIGHT DOORS. SEE DOOR HINGE DETAIL, STD. PLAN J-3b; CONCEALED HEAVY DUTY STAINLESS STEEL LIFT OFF HINGES ARE ALLOWED AS AN ALTERNATIVE. UPPER LEFT DOOR SHALL HAVE 3 HINGES, LOWER LEFT DOOR SHALL HAVE 2 HINGES, AND RIGHT DOOR SHALL HAVE 3 HINGES. LOWER DOOR SHALL HAVE A TWO POSITION DOOR STOP ASSEMBLY.
5. THE FOLLOWING EQUIPMENT WITHIN THE SERVICE ENCLOSURE SHALL HAVE AN APPROPRIATELY ENGRAVED PHENOLIC NAME PLATE ATTACHED WITH SCREWS OR RIVETS: KEY NUMBERS 2, 3, 4, 6, 7, 8, 9, 16, 21 AND 25. KEY NUMBER 4 NAME PLATE SHALL READ: "PHOTOCELL BYPASS TEST ON" AND "PHOTOCELL TEST OFF- AUTOMATIC". SEE SERVICE CABINET DETAIL.
6. METERING ARRANGEMENTS VARY WITH DIFFERENT SERVING UTILITIES. THE UTILITY MAY REQUIRE METER BASE MOUNTING IN THE ENCLOSURE, ON THE SIDE, OR ON THE BACK OF THE ENCLOSURE. THE UTILITY MAY REQUIRE THE DIMENSION BETWEEN THE DOOR AND THE FRONT OF THE SAFETY SOCKET BOX TO BE LESS THAN THE 11 INCHES SHOWN IN THE LEFT SIDE- SAFETY SOCKET BOX MOUNTING DETAIL, SEE STD. PLAN J-3b. THE CONTRACTOR SHALL VERIFY THE SERVING UTILITY'S REQUIREMENTS PRIOR TO FABRICATION OF AND INSTALLING THE SERVICE EQUIPMENT.
7. THE DIMENSIONS SHOWN ARE MINIMUM AND SHALL BE ADJUSTED TO ACCOMMODATE THE VARIOUS SIZES OF EQUIPMENT INSTALLED.
8. ALL BUSSWORK SHALL BE HIGH GRADE COPPER AND SHALL EQUAL OR EXCEED THE MAIN BREAKER RATING. ALL BREAKERS SHALL BOLT ONTO THE BUSSWORK. JUMPERING OF BREAKERS SHALL NOT BE ALLOWED. BUSSWORK SHALL ACCOMMODATE ALL FUTURE EQUIPMENT AS SHOWN IN THE BREAKER SCHEDULE.
9. THE PHOTOCELL UNIT SHALL BE CENTERED IN THE PHOTOCELL ENCLOSURE TO PERMIT 360 DEGREE ROTATION OF THE PHOTOCELL WITHOUT REMOVAL OF THE PHOTOCELL UNIT OR THE PHOTOCELL ENCLOSURE.
10. ALL INTERNAL WIRE RUNS SHALL BE IDENTIFIED WITH "TO - FROM" CODED TAGS LABELED WITH THE CODE LETTERS AND/OR NUMBERS SHOWN ON THE SCHEDULES. APPROVED PVC OR POLYOLEFIN WIRE MARKING SLEEVES SHALL BE USED.
11. ALL NUTS, BOLTS, AND WASHERS USED FOR MOUNTING PHOTOCELL ENCLOSURE SHALL BE STAINLESS STEEL.
12. A 1% TOLERANCE IS ALLOWED FOR ALL DIMENSIONS.
13. SEE PLANS FOR BREAKER SCHEDULE.
14. INSTALL CONDUIT COUPLINGS ON ALL CONDUITS. PLACE COUPLINGS FLUSH WITH TOP OF CONCRETE FOUNDATION.
15. SEAL CABINET TO FOUNDATION WITH A 1/2" BEAD OF SILICONE. APPLY SILICONE TO DRY SURFACE ONLY.
16. THE METER BASE PORTION OF THIS SERVICE WAS DESIGNED TO MEET METERING PORTION OF EUSERC DRAWING 309 REQUIREMENTS.

EXPIRES MAY 5, 2005

SERVICE CABINET TYPE E (0 - 200 AMP TYPE 240/480 SINGLE PHASE) STANDARD PLAN J-3d

SHEET 1 OF 1 SHEET

APPROVED FOR PUBLICATION

Harold J. Peterfeso *11-05-03*

STATE DESIGN ENGINEER DATE

Washington State Department of Transportation

DATE	REVISION	BY
09/2003	REVISED KEY NOTE 16	MHG

NOTE: THIS PLAN IS NOT A LEGAL ENGINEERING DOCUMENT BUT AN ELECTRONIC DUPLICATE. THE ORIGINAL, SIGNED BY THE ENGINEER AND APPROVED FOR PUBLICATION, IS KEPT ON FILE AT THE WASHINGTON STATE DEPARTMENT OF TRANSPORTATION. A COPY MAY BE OBTAINED UPON REQUEST.

DRAWN BY: MONIQUE GLICK

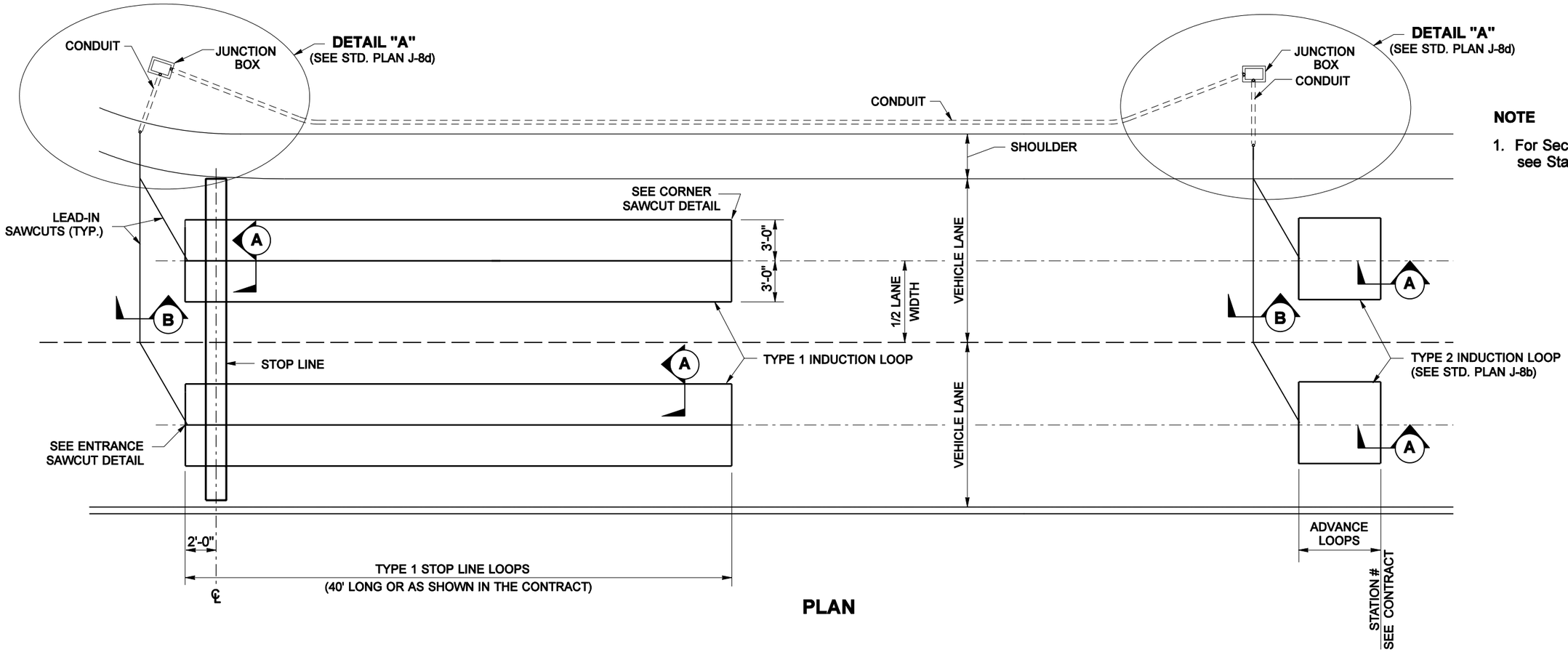

PLAN

NOTE

1. For Sections A and B, see Standard Plan J-8d.

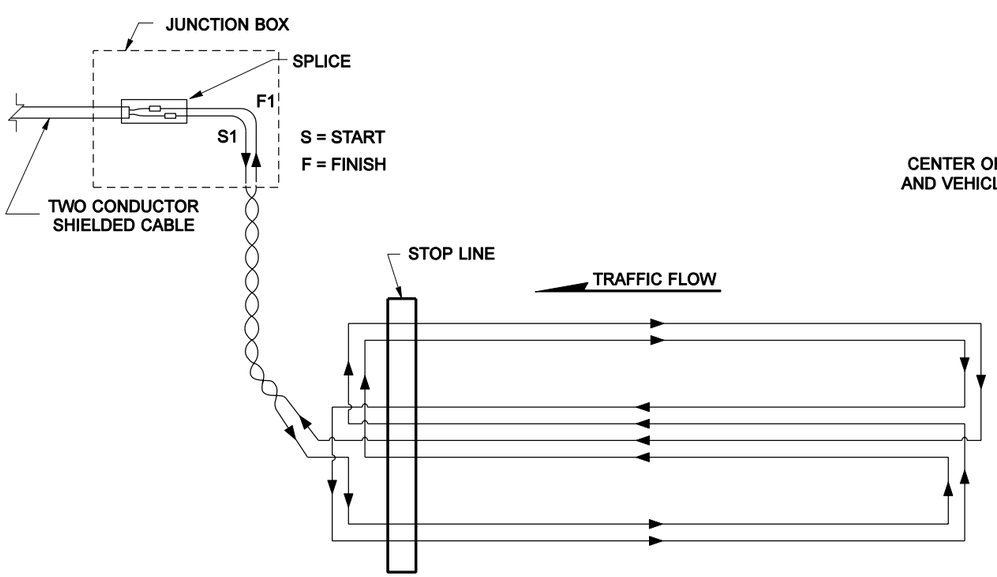

TYPE 1 STOP LINE LOOP WIRING DIAGRAM

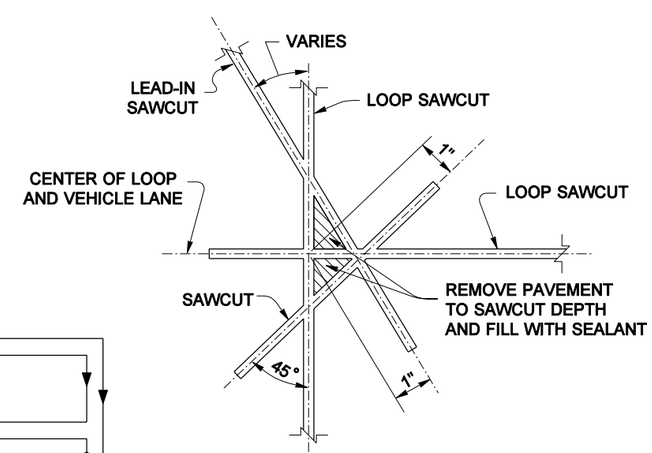

ENTRANCE SAWCUT DETAIL

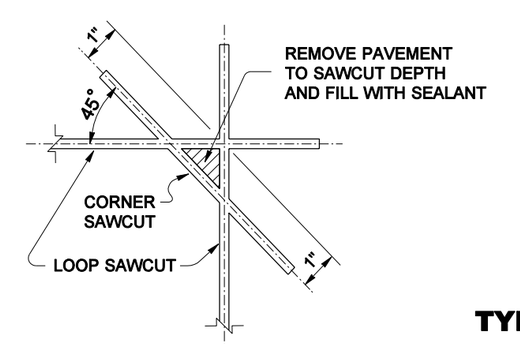

CORNER SAWCUT DETAIL

TYPE 1 INDUCTION LOOP

STANDARD PLAN J-8a

SHEET 1 OF 1 SHEET

APPROVED FOR PUBLICATION

Harold J. Peterfeso — STATE DESIGN ENGINEER — *05-20-04* — DATE

Washington State Department of Transportation

NOTE: THIS PLAN IS NOT A LEGAL ENGINEERING DOCUMENT BUT AN ELECTRONIC DUPLICATE. THE ORIGINAL, SIGNED BY THE ENGINEER AND APPROVED FOR PUBLICATION, IS KEPT ON FILE AT THE WASHINGTON STATE DEPARTMENT OF TRANSPORTATION. A COPY MAY BE OBTAINED UPON REQUEST.

DRAWN BY: MONIQUE GLICK

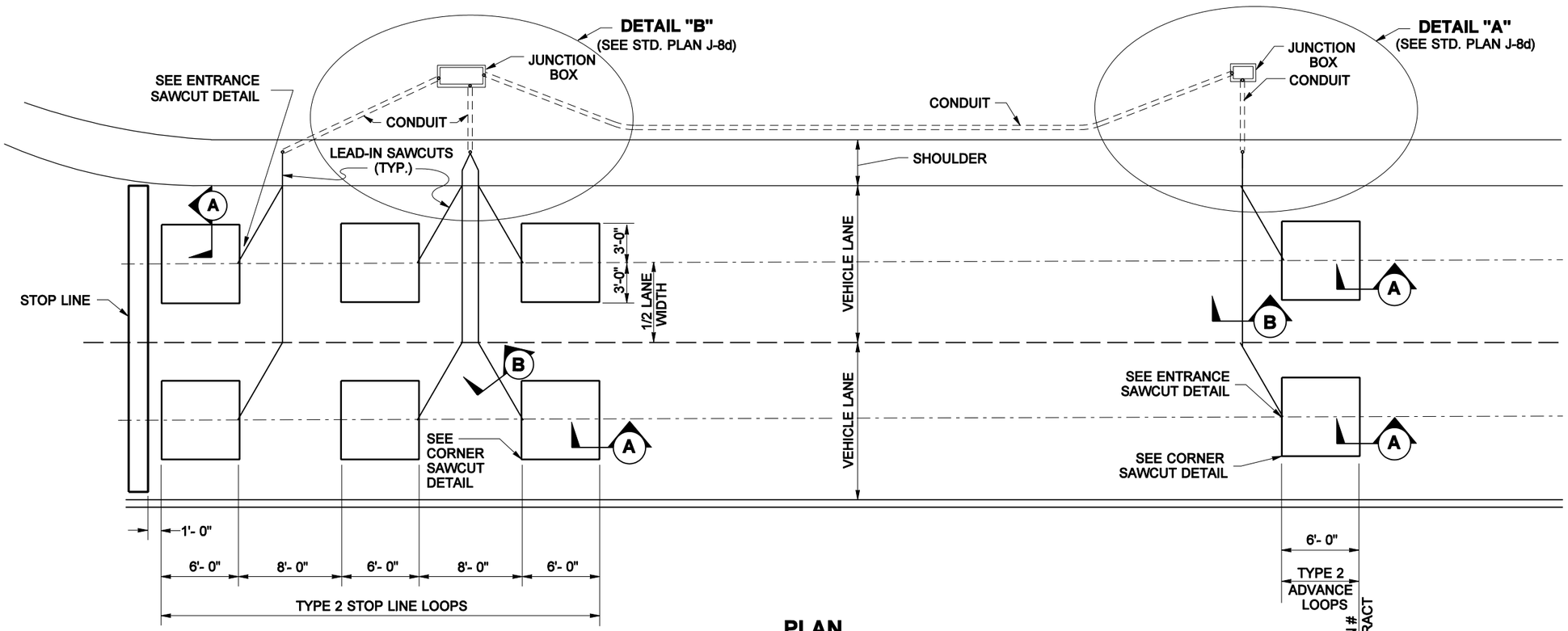

STATION # SEE CONTRACT

PLAN

NOTE

1. For Sections A and B, see Standard Plan J-8d.

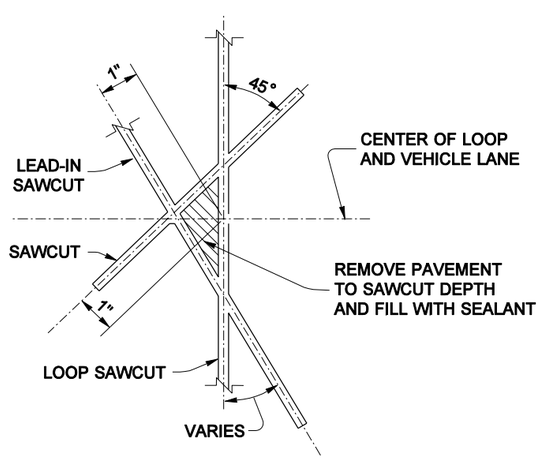

ENTRANCE SAWCUT DETAIL

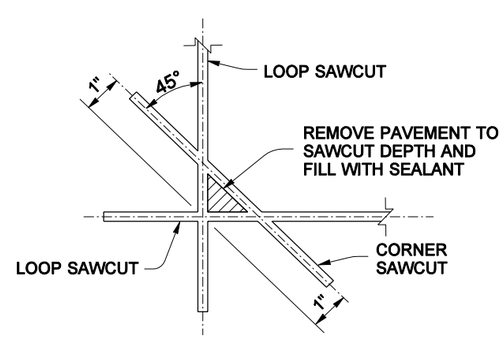

CORNER SAWCUT DETAIL

TYPE 2 INDUCTION LOOP

STANDARD PLAN J-8b

SHEET 1 OF 2 SHEETS

APPROVED FOR PUBLICATION

Harold J. Peterfeso — STATE DESIGN ENGINEER

05-20-04 — DATE

Washington State Department of Transportation

NOTE: THIS PLAN IS NOT A LEGAL ENGINEERING DOCUMENT BUT AN ELECTRONIC DUPLICATE THE ORIGINAL, SIGNED BY THE ENGINEER AND APPROVED FOR PUBLICATION, IS KEPT ON FILE AT THE WASHINGTON STATE DEPARTMENT OF TRANSPORTATION. A COPY MAY BE OBTAINED UPON REQUEST.

DRAWN BY: MONIQUE GLICK

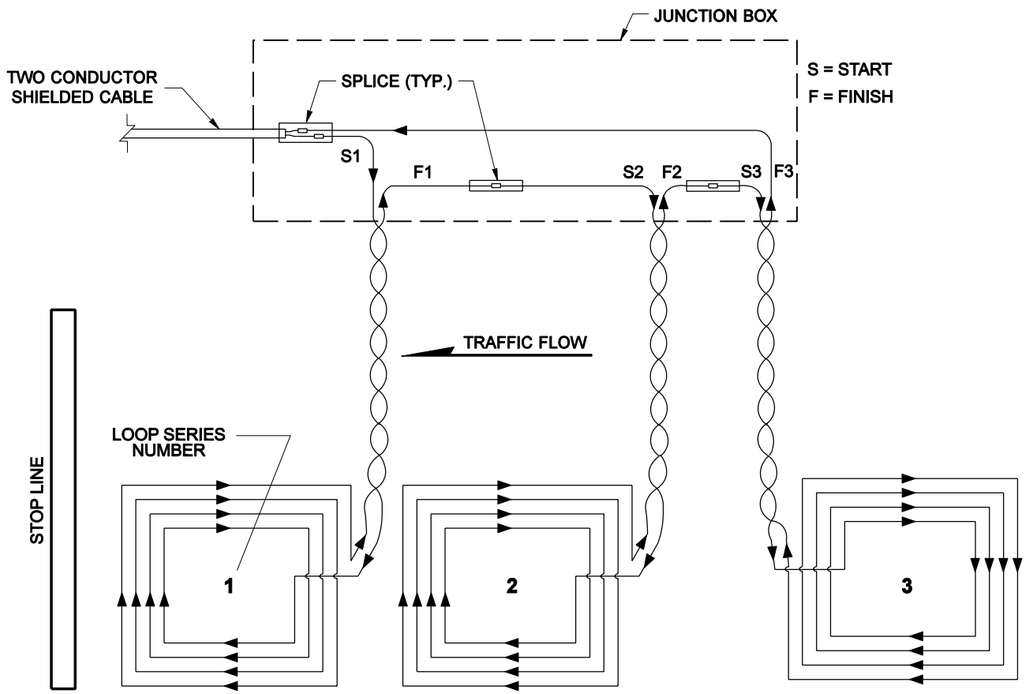

TYPE 2 STOP LINE LOOP WIRING DIAGRAM
(SERIES SPLICE SHOWN)

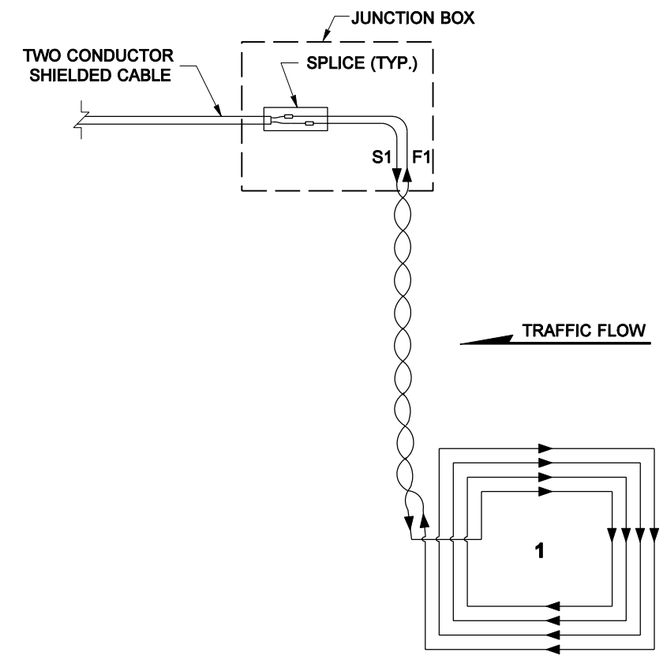

TYPE 2 ADVANCE LOOP WIRING DIAGRAM

NOTES

1. All of the loop lead-in wires shall return to the Junction Box.
2. For Splice Detail, see Standard Plan J-8d.

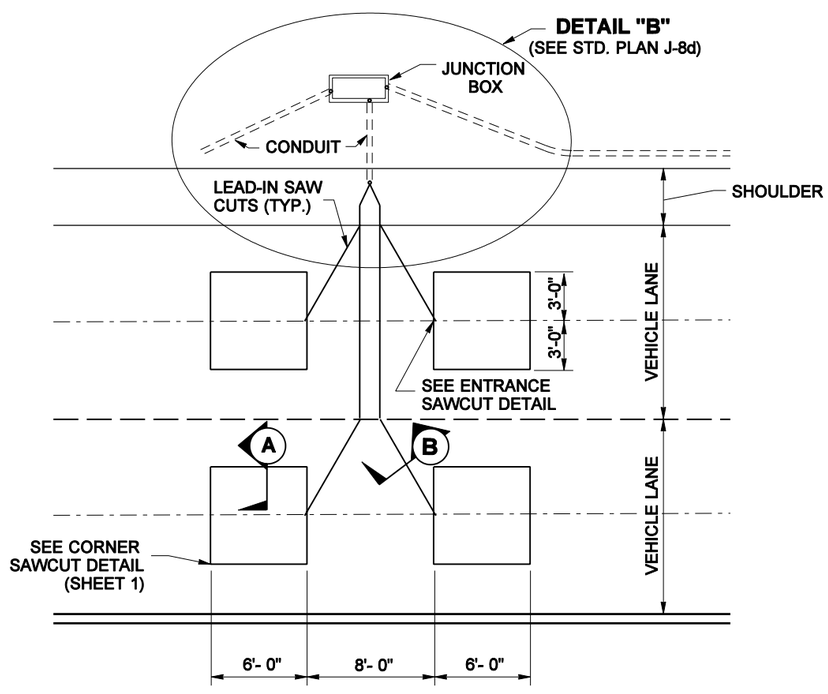

TYPE 2 SAMPLING LOOPS

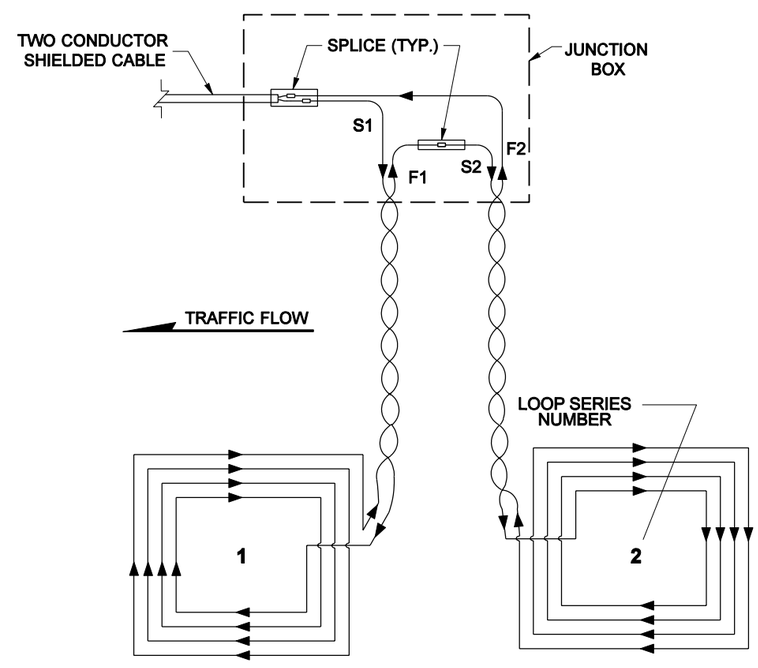

TYPE 2 SAMPLING LOOP WIRING DIAGRAM
(SERIES SPLICE SHOWN)

NOTE: THIS PLAN IS NOT A LEGAL ENGINEERING DOCUMENT BUT AN ELECTRONIC DUPLICATE. THE ORIGINAL, SIGNED BY THE ENGINEER AND APPROVED FOR PUBLICATION, IS KEPT ON FILE AT THE WASHINGTON STATE DEPARTMENT OF TRANSPORTATION. A COPY MAY BE OBTAINED UPON REQUEST.

EXPIRES MAY 5, 2005

TYPE 2 INDUCTION LOOP

STANDARD PLAN J-8b

SHEET 2 OF 2 SHEETS

APPROVED FOR PUBLICATION

Harold J. Peterfeso — STATE DESIGN ENGINEER
05-20-04 — DATE

Washington State Department of Transportation

DRAWN BY: MONIQUE GLICK

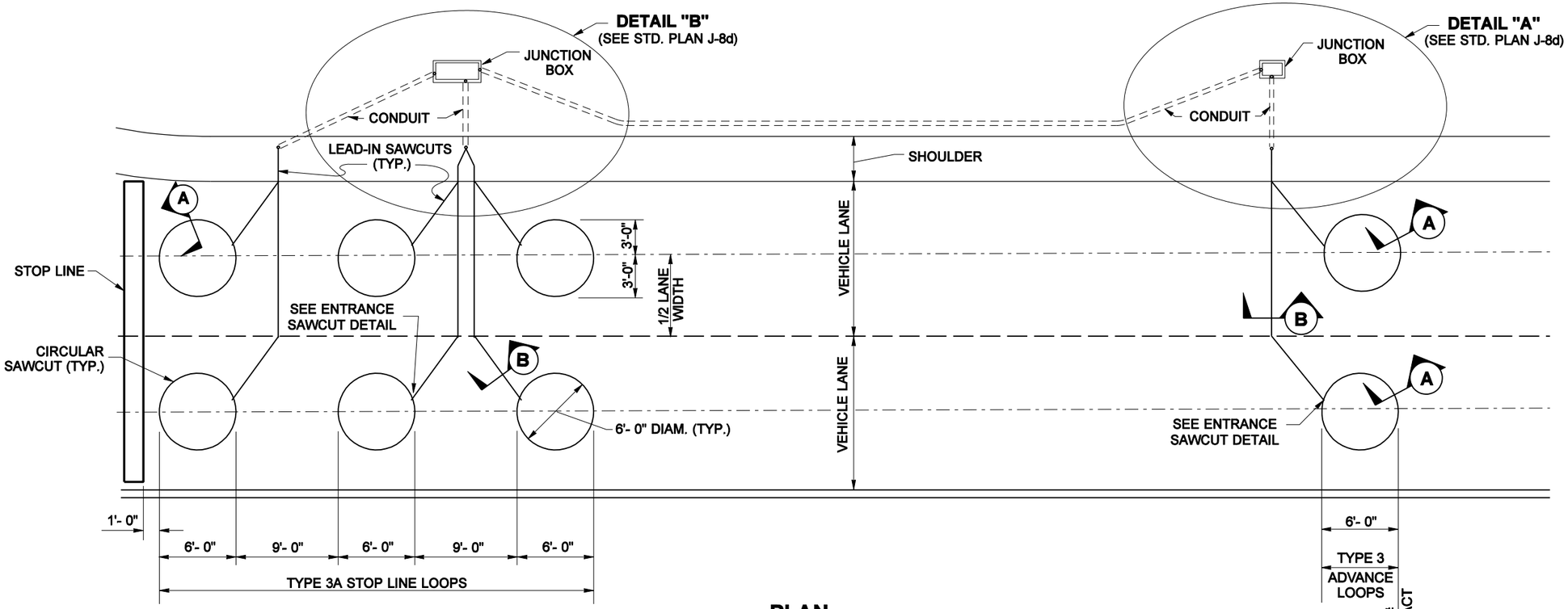

PLAN

NOTE

1. For Sections A and B, see Standard Plan J-8d.

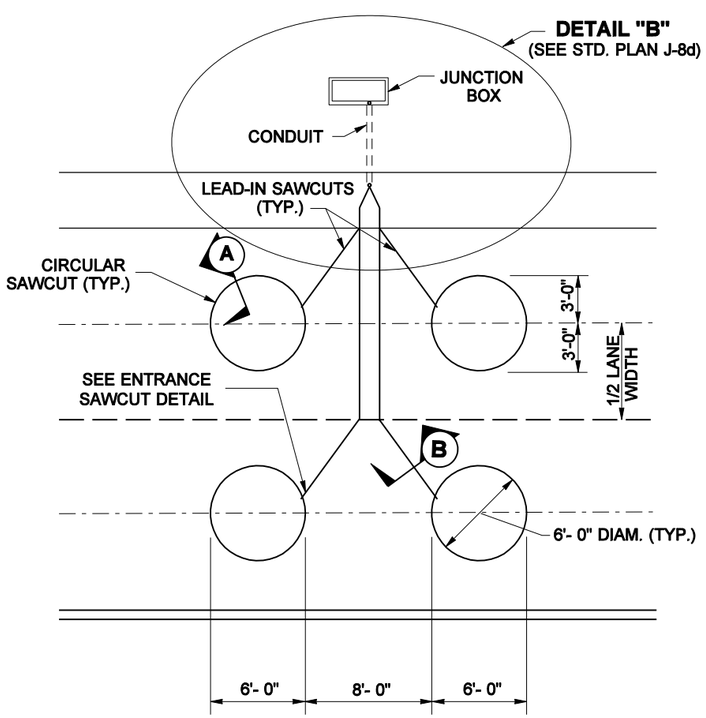

TYPE 3 SAMPLING LOOPS

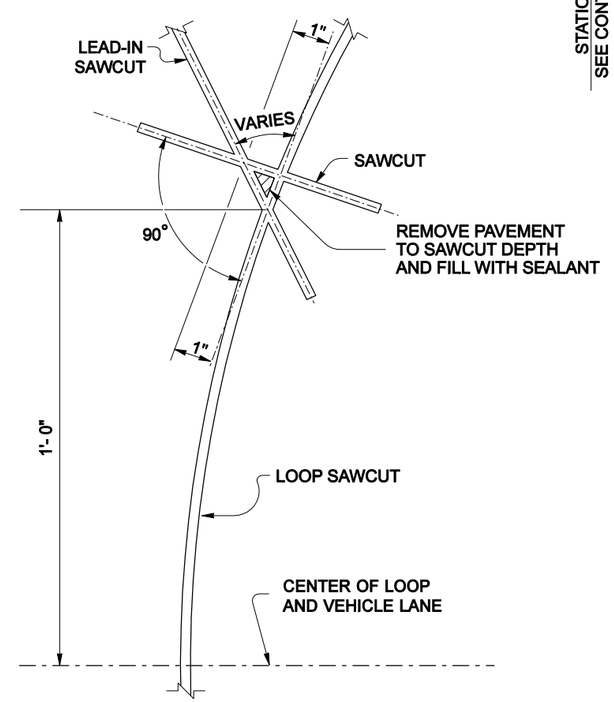

ENTRANCE SAWCUT DETAIL

EXPIRES MAY 5, 2005

TYPE 3 INDUCTION LOOP

STANDARD PLAN J-8c

SHEET 1 OF 3 SHEETS

APPROVED FOR PUBLICATION

Harold J. Peterfeso — STATE DESIGN ENGINEER

05-20-04 — DATE

Washington State Department of Transportation

NOTE: THIS PLAN IS NOT A LEGAL ENGINEERING DOCUMENT BUT AN ELECTRONIC DUPLICATE. THE ORIGINAL, SIGNED BY THE ENGINEER AND APPROVED FOR PUBLICATION, IS KEPT ON FILE AT THE WASHINGTON STATE DEPARTMENT OF TRANSPORTATION. A COPY MAY BE OBTAINED UPON REQUEST.

DRAWN BY: MONIQUE GLICK

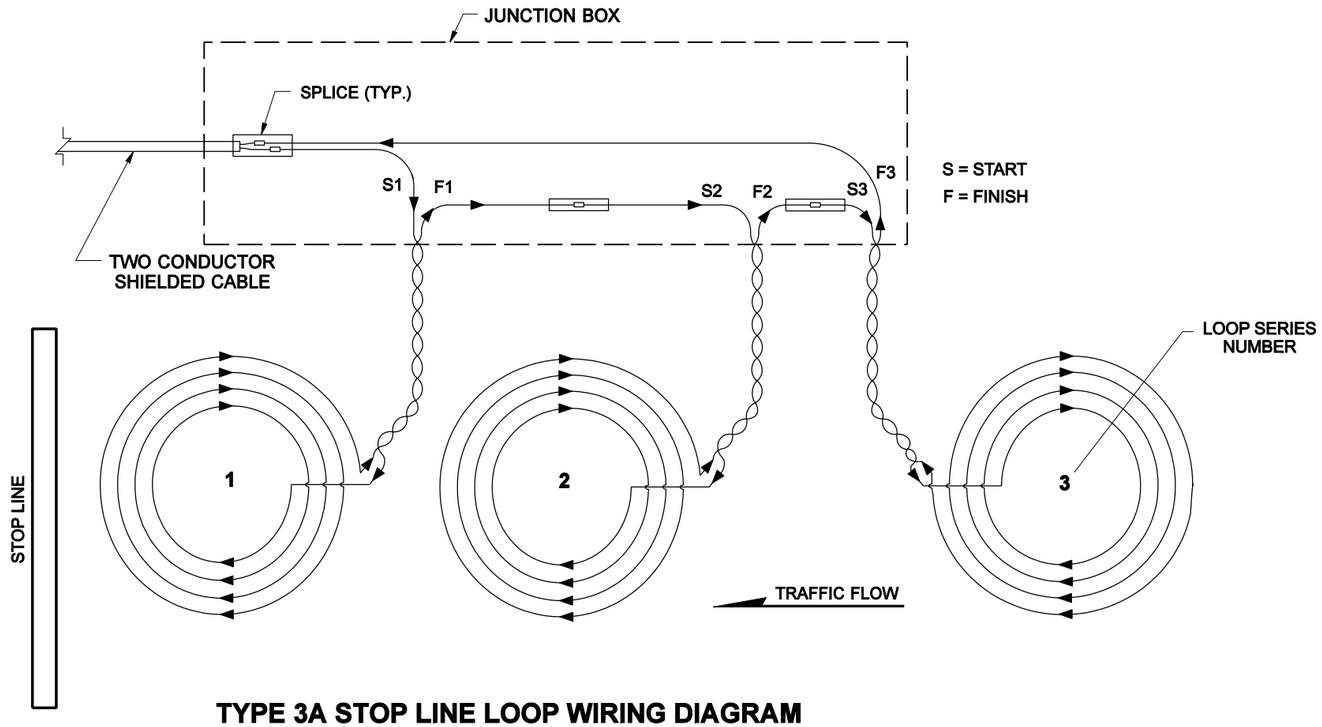

TYPE 3A STOP LINE LOOP WIRING DIAGRAM
(SERIES SPLICE SHOWN)

NOTES

1. All of the loop lead-in wires shall return to the Junction Box.
2. For Splice Detail, see Standard Plan J-8d.

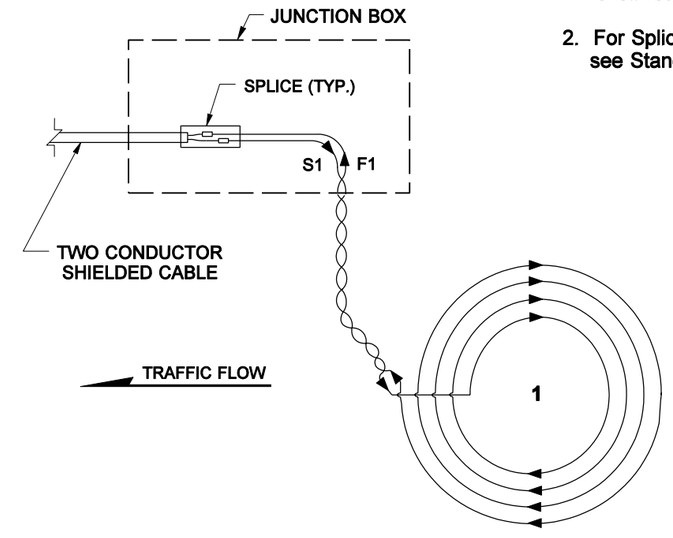

TYPE 3 ADVANCE LOOP WIRING DIAGRAM

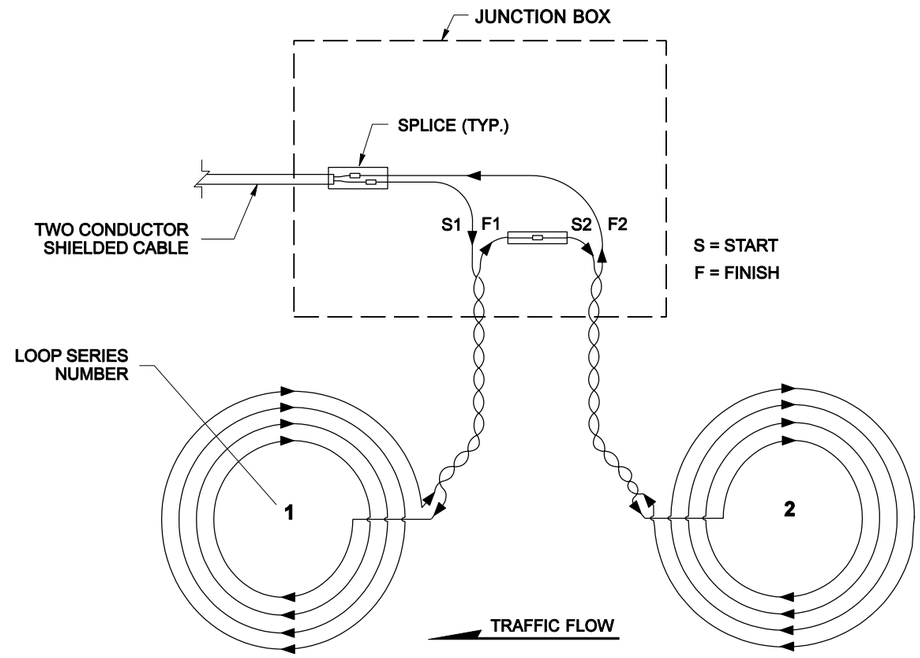

TYPE 3 SAMPLING LOOP WIRING DIAGRAM
(SERIES SPLICE SHOWN)

TYPE 3 INDUCTION LOOP

STANDARD PLAN J-8c

SHEET 2 OF 3 SHEETS

APPROVED FOR PUBLICATION

Harold J. Peterfeso — STATE DESIGN ENGINEER
05-20-04 — DATE

Washington State Department of Transportation

NOTE: THIS PLAN IS NOT A LEGAL ENGINEERING DOCUMENT BUT AN ELECTRONIC DUPLICATE. THE ORIGINAL, SIGNED BY THE ENGINEER AND APPROVED FOR PUBLICATION, IS KEPT ON FILE AT THE WASHINGTON STATE DEPARTMENT OF TRANSPORTATION. A COPY MAY BE OBTAINED UPON REQUEST.

DRAWN BY: MONIQUE GLICK

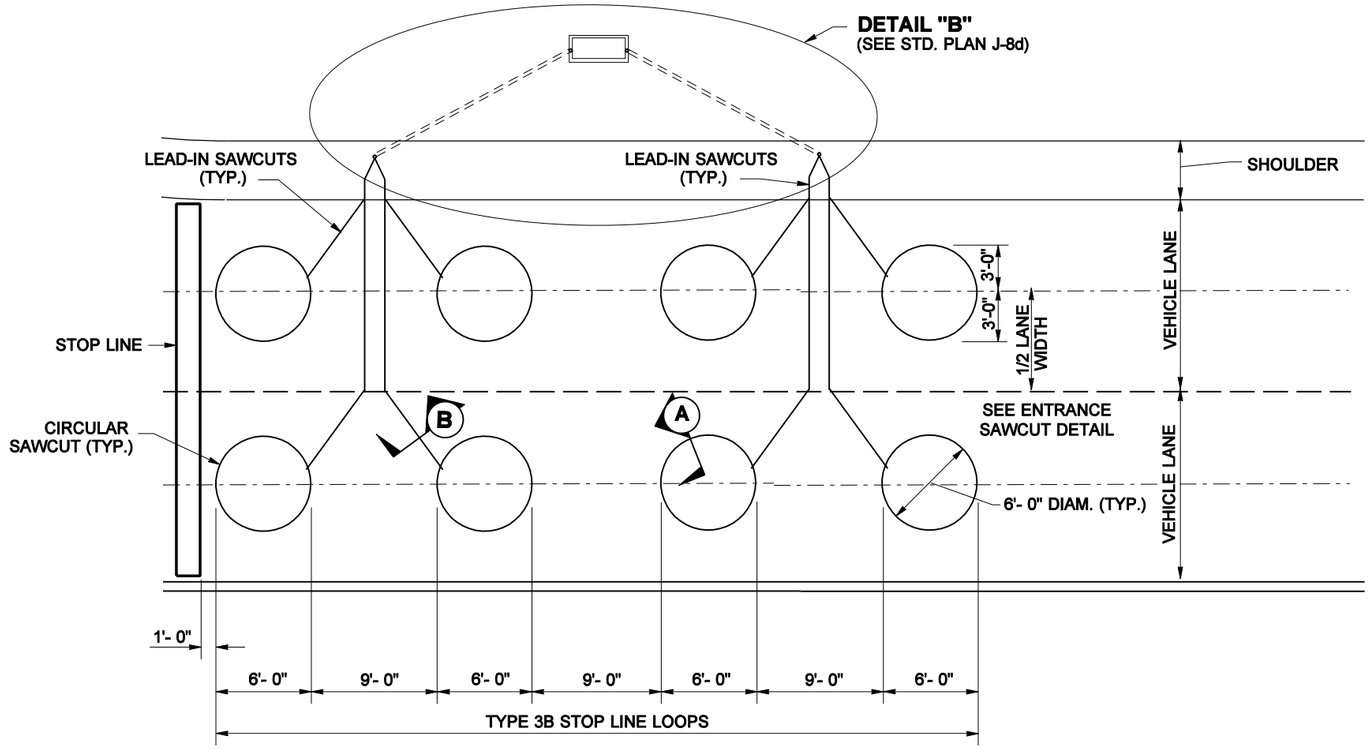

PLAN

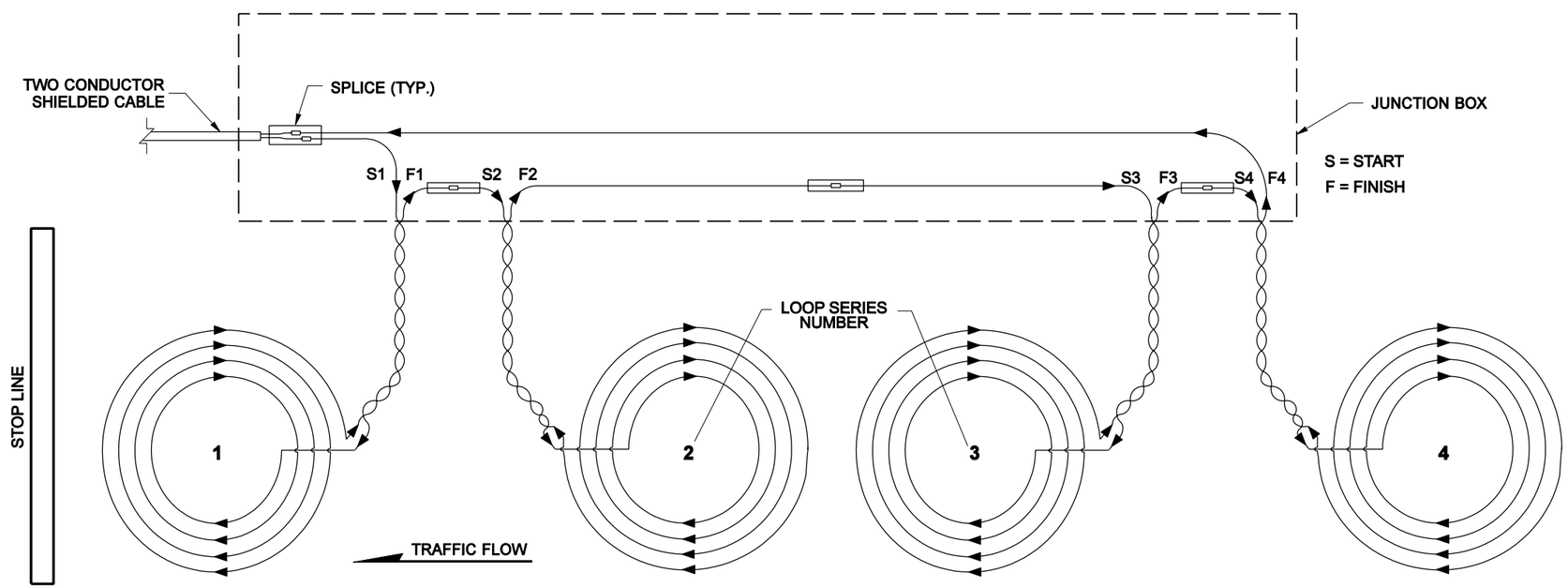

TYPE 3B STOP LINE LOOP WIRING DIAGRAM

(SERIES SPLICE SHOWN)

NOTE: THIS PLAN IS NOT A LEGAL ENGINEERING DOCUMENT BUT AN ELECTRONIC DUPLICATE. THE ORIGINAL, SIGNED BY THE ENGINEER AND APPROVED FOR PUBLICATION, IS KEPT ON FILE AT THE WASHINGTON STATE DEPARTMENT OF TRANSPORTATION. A COPY MAY BE OBTAINED UPON REQUEST.

EXPIRES MAY 5, 2005

TYPE 3 INDUCTION LOOP

STANDARD PLAN J-8c

SHEET 3 OF 3 SHEETS

APPROVED FOR PUBLICATION

Harold J. Peterfeso — STATE DESIGN ENGINEER

05-20-04 — DATE

Washington State Department of Transportation

DRAWN BY: MONIQUE GLICK

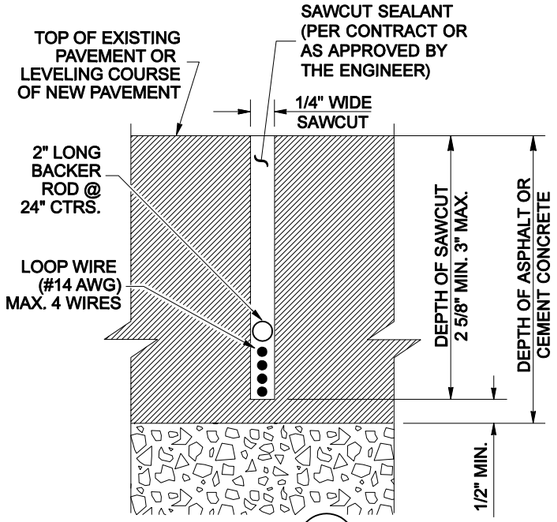

SECTION A

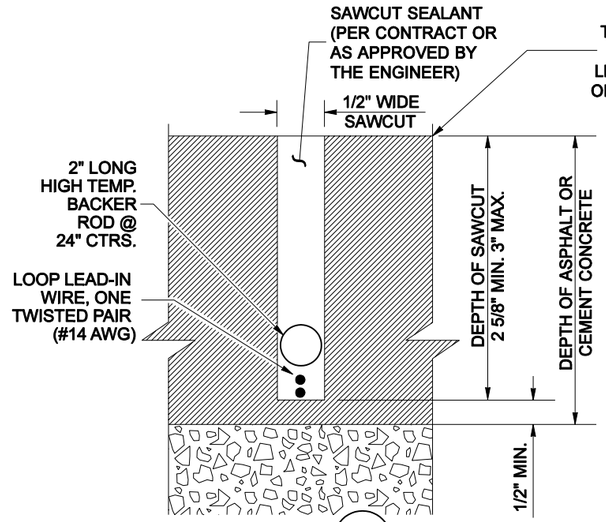

SECTION B

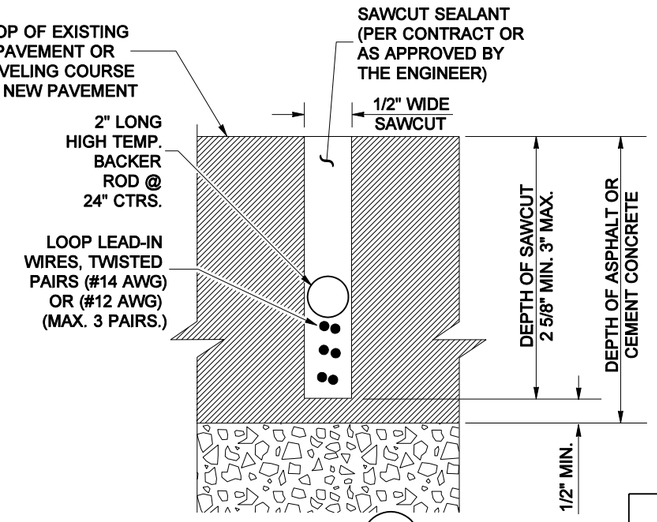

SECTION C

NOTES

1. Fill the conduit trench to the top of the existing or new surfacing with CSTC, sand or controlled density fill. See "Standard Specifications" Section 2-09.3(1)E.
2. Minor Regional variation is allowed in the soft pocket closure. Consult with the Engineer or see the Contract for additional requirements.
3. Conductors shall be snug to the bottom of the sawcut. High temperature backer rod shall be snug to the conductors.

CONDUIT SIZING TABLE

LOOP LEAD PAIRS	1-2	3	4-5	6-8	9-12
CONDUIT SIZE (MIN)	1"	1 1/4"	1 1/2"	2"	3"

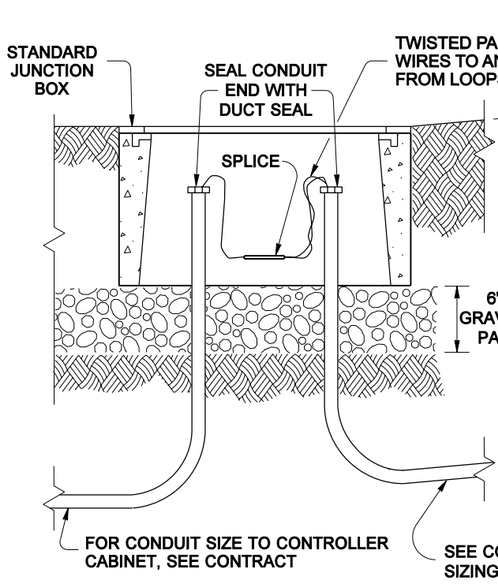

JUNCTION BOX PLACEMENT

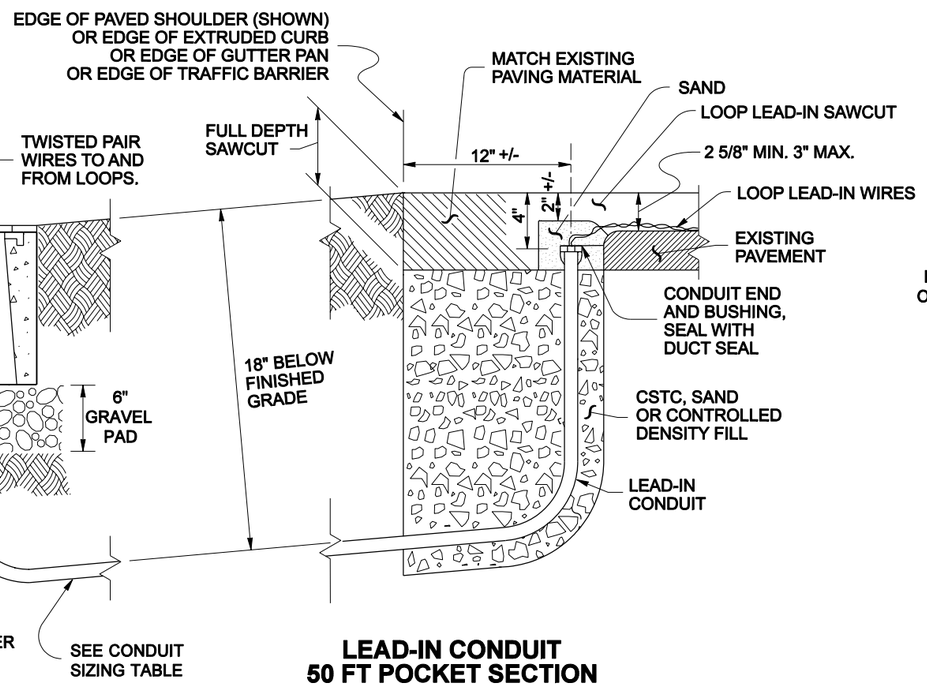

LEAD-IN CONDUIT 50 FT POCKET SECTION

SECTION E

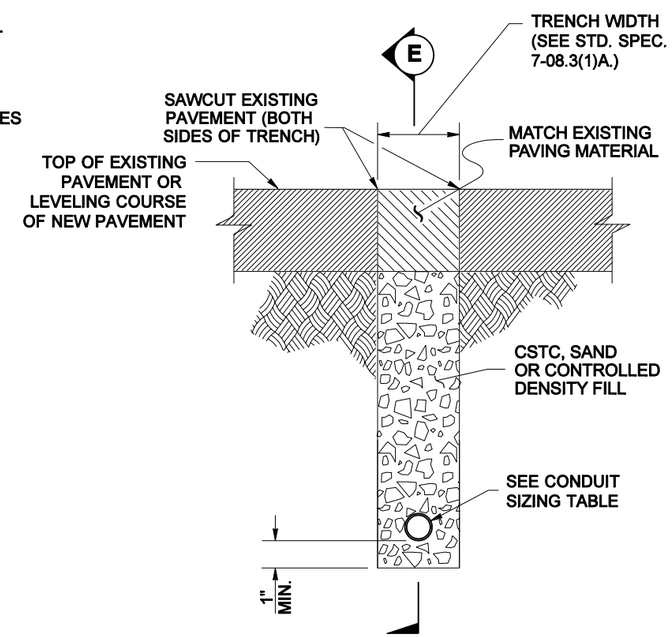

SECTION D

EXPIRES MAY 5, 2005

INDUCTION LOOP DETAILS

STANDARD PLAN J-8d

SHEET 1 OF 2 SHEETS

APPROVED FOR PUBLICATION

Harold J. Peterfeso — STATE DESIGN ENGINEER — *05-20-04* — DATE

Washington State Department of Transportation

NOTE: THIS PLAN IS NOT A LEGAL ENGINEERING DOCUMENT BUT AN ELECTRONIC DUPLICATE. THE ORIGINAL, SIGNED BY THE ENGINEER AND APPROVED FOR PUBLICATION, IS KEPT ON FILE AT THE WASHINGTON STATE DEPARTMENT OF TRANSPORTATION. A COPY MAY BE OBTAINED UPON REQUEST.

DRAWN BY: MONIQUE GLICK

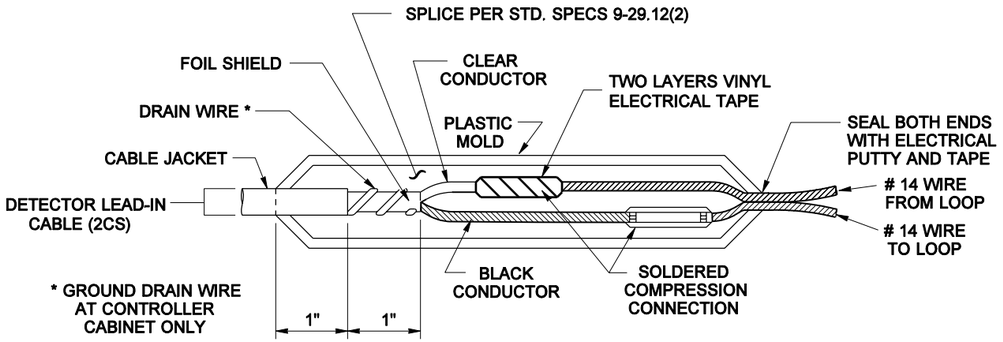

SPLICE DETAIL

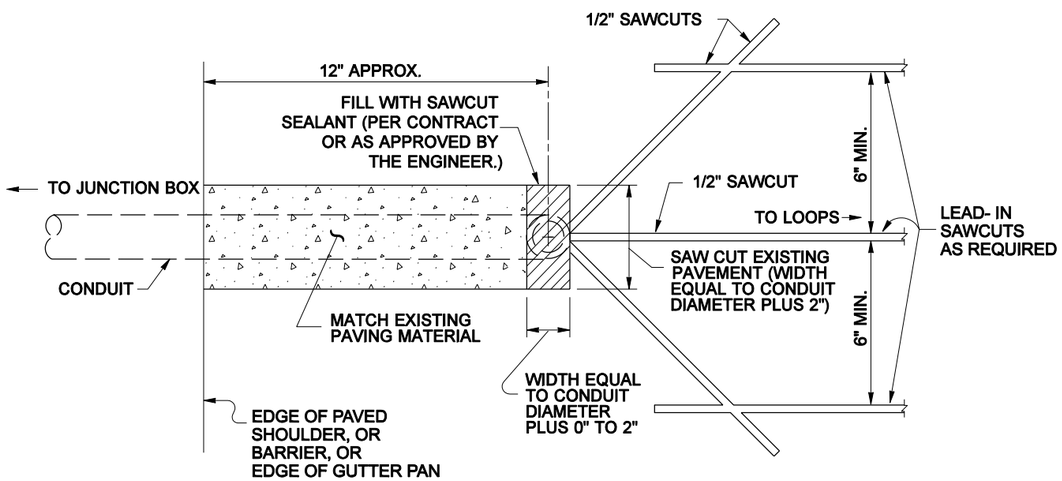

SAWCUT AND CONDUIT CONNECTION PLAN

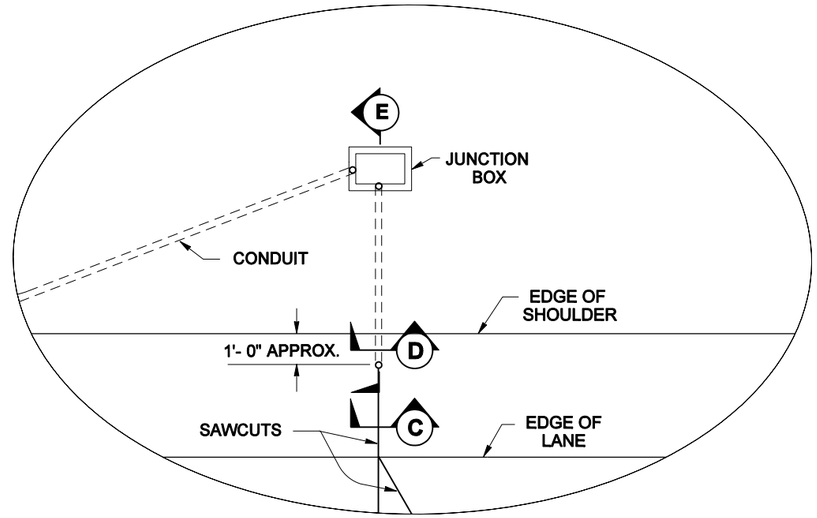

DETAIL "A"

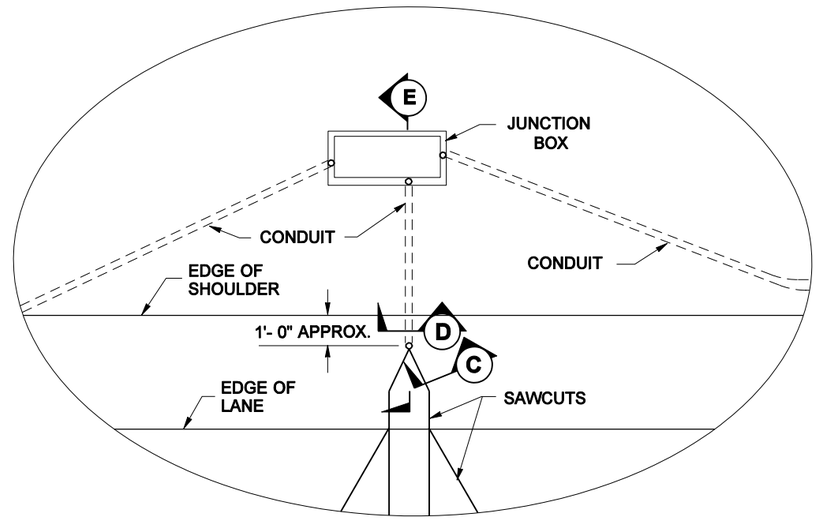

DETAIL "B"

LOOP LEAD-IN WIRING LABEL

L x x x - x x

LOOP NUMBER

DASH

"S" OR "F"

LOOP SERIES NUMBER

LOOP INSTALLATION NOTES

1. Install the Junction Box and the lead-in conduit.
2. Sawcut the loop slots and the lead-in slots.
3. Lay out the loop wire starting at the Junction Box, allowing 5' minimum slack.
4. Install the wire in the loop slot as shown.
5. Finish laying out the wire at the Junction Box and identify the leads with the loop number, the "S" for start and the "F" for the finish, and the loop series number.
6. Twist each pair of the lead wires two times per foot from the loop to the Junction Box. Reverse the direction of the twist for each successive pair installed.
7. Construct a supplemental splice containing any series loop connections required in the plans. Supplemental splices are subject to the same requirements shown for the loop lead and the shielded cable splice.
8. Splice the loop leads of supplemental splice leads to the shielded cable as noted in the Contract.
9. Complete installation and test loop circuits or combination loop circuits. See Standard Specifications 8-20.3(14)D.
10. Conduit for the loop stubout shall be as required in the Contract.

EXPIRES MAY 5, 2005

INDUCTION LOOP DETAILS

STANDARD PLAN J-8d

SHEET 2 OF 2 SHEETS

APPROVED FOR PUBLICATION

Harold J. Peterfeso — STATE DESIGN ENGINEER — *05-20-04* — DATE

Washington State Department of Transportation

NOTE: THIS PLAN IS NOT A LEGAL ENGINEERING DOCUMENT BUT AN ELECTRONIC DUPLICATE. THE ORIGINAL, SIGNED BY THE ENGINEER AND APPROVED FOR PUBLICATION, IS KEPT ON FILE AT THE WASHINGTON STATE DEPARTMENT OF TRANSPORTATION. A COPY MAY BE OBTAINED UPON REQUEST.