INTERSTATE 405 Corridor Program
Congestion Relief & Bus Rapid Transit Projects

APPENDIX I2

ITS Details

I-405, SR520 to SR522 Stage 1 (Kirkland Stage 1)

Request For Proposal
July 15, 2005

Washington State Department of Transportation

MODEL 330 CABINET DETAILS

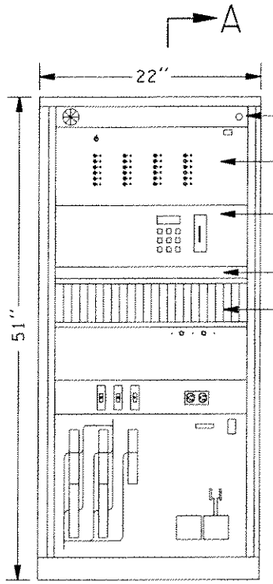

FRONT VIEW

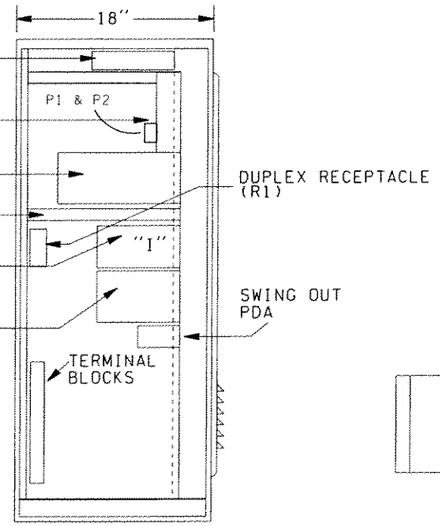

SECTION A-A

SWING OUT PDA

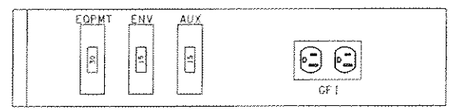

TO INPUT FILE (SEE TERMINAL BLOCK ASSIGNMENT TABLE BELOW)

6 POSITION DC GROUND BUS-COPPER

TERMINAL BLOCKS SHALL BE 12 POSITION BARRIER TYPE EXCEPT FOR TB1 WHICH SHALL BE A 2 POSITION BARRIER TYPE.

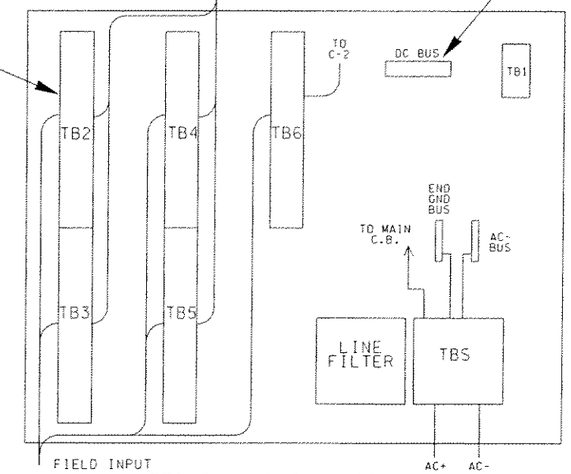

TERMINAL BLOCK DETAIL

INPUT PANEL TERMINAL BLOCK ASSIGNMENT TABLE

POSITION	A	B	POSITION	A	B	POSITION	A	B
TB1 1	24V P.S.	I15-1	TB4 1	FIELD DET*	I7D	TB6 1	AUDI IN	C2-A
TB1 2	N/A	N/A	TB4 2	#13	I7E	TB6 2	(FROM CENTRAL)	C2-B
TB2 1	FIELD DET*	I1D	TB4 3	FIELD DET*	I7J	TB6 3	AUDIO OUT	C2-C
TB2 2	#1	I1E	TB4 4	#14	I7K	TB6 4	(TO CENTRAL)	C2-D
TB2 3	FIELD DET*	I1J	TB4 5	FIELD DET*	I8D	TB6 5	N/A	N/A
TB2 4	#2	I1K	TB4 6	#15	I8E	TB6 6	N/A	N/A
TB2 5	FIELD DET*	I2D	TB4 7	FIELD DET*	I8J	TB6 7	N/A	N/A
TB2 6	#3	I2E	TB4 8	#16	I8K	TB6 8	N/A	N/A
TB2 7	FIELD DET*	I2J	TB4 9	FIELD DET*	I9D	TB6 9	N/A	N/A
TB2 8	#4	I2K	TB4 10	#17	I9E	TB6 10	N/A	N/A
TB2 9	FIELD DET*	I3D	TB4 11	FIELD DET*	I9J	TB6 11	N/A	N/A
TB2 10	#5	I3E	TB4 12	#18	I9K	TB6 12	N/A	N/A
TB2 11	FIELD DET*	I3J	TB5 1	FIELD DET*	I10D			
TB2 12	#6	I3K	TB5 2	#19	I10E			
TB3 1	FIELD DET*	I4D	TB5 3	FIELD DET*	I10J			
TB3 2	#7	I4E	TB5 4	#20	I10K			
TB3 3	FIELD DET*	I4J	TB5 5	FIELD DET*	I11D			
TB3 4	#8	I4K	TB5 6	#21	I11E			
TB3 5	FIELD DET*	I5D	TB5 7	FIELD DET*	I11J			
TB3 6	#9	I5E	TB5 8	#22	I11K			
TB3 7	FIELD DET*	I5J	TB5 9	FIELD DET*	I12D			
TB3 8	#10	I5K	TB5 10	#23	I12E			
TB3 9	FIELD DET*	I6D	TB5 11	FIELD DET*	I12J			
TB3 10	#11	I6E	TB5 12	#24	I12K			
TB3 11	FIELD DET*	I6J						
TB3 12	#12	I6K						

CABINET ONE LINE DIAGRAM - POWER

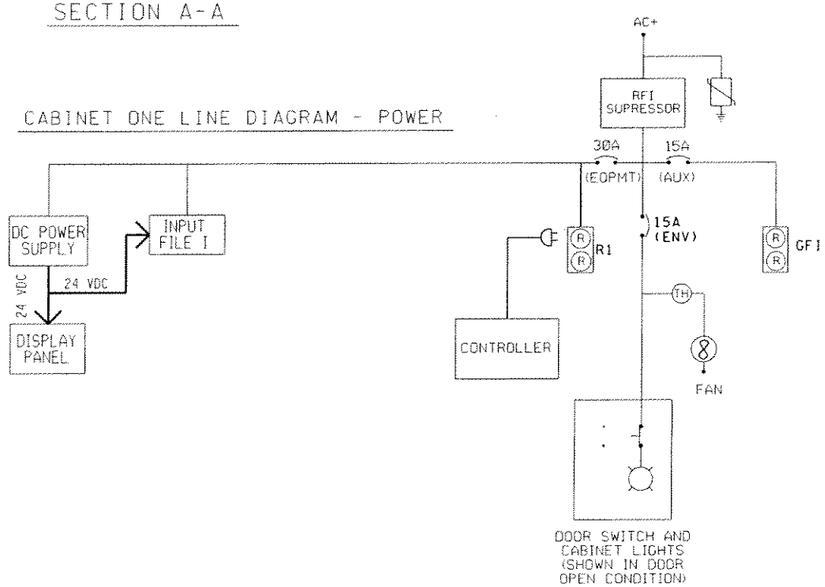

LEGEND

- THERMOSTAT
- CIRCUIT BREAKER
- RECEPTACLE
- RELAY COIL
- RELAY, CONTACT N.C.
- RELAY, CONTACT N.O.
- SURGE PROTECTION
- SWITCH
- SWITCH, N.C.
- DC GROUND
- EQUIPMENT GROUND

INPUT FILE (REAR VIEW)

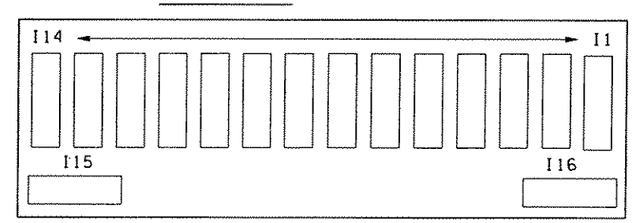

NOTE: INPUT FILE "I" TERMINAL BLOCKS "I1" - "I16"

FILE NAME	C:\AAWork\Kirkland NickelStage 1- ITS Master Details\330_Cabinet.dgn				
TIME	02:29:12 PM				
DATE	09/13/2004				
DESIGNED BY					
ENTERED BY					
CHECKED BY					
PROJ. ENGR.					
REGIONAL ADM.		REVISION	DATE	BY	

REGION NO.	STATE	FED.AID PROJ.NO.
10	WASH	
JOB NUMBER		
CONTRACT NO.		LOCATION NO.

P.E. STAMP BOX DATE

P.E. STAMP BOX DATE

Washington State Department of Transportation

ITS MASTER DETAIL ENGLISH

MODEL 330 CABINET (1OF2)

PLOT1

CAB1

SHEET 1.0E OF SHEETS

CONNECTOR C1P AND C1S

PIN	CONNECT TO	FUNCTION	PIN	CONNECT TO	FUNCTION	PIN	CONNECT TO	FUNCTION	PIN	CONNECT TO	FUNCTION
1	DC GRD	DC GROUND	27	NC	NA	53	DP 55	DET 15	79	NC	NA
2	NC	NA	28	NC	NA	54	DP 56	DET 16	80	NC	NA
3	NC	NA	29	NC	NA	55	DP 57	DET 17	81	NC	NA
4	NC	NA	30	NC	NA	56	DP 58	DET 18	82	NC	NA
5	NC	NA	31	NC	NA	57	DP 59	DET 19	83	NC	NA
6	NC	NA	32	NC	NA	58	DP 60	DET 20	84	NC	NA
7	NC	NA	33	NC	NA	59	DP 61	DET 21	85	NC	NA
8	NC	NA	34	NC	NA	60	DP 62	DET 22	86	NC	NA
9	NC	NA	35	NC	NA	61	DP 63	DET 23	87	NC	NA
10	NC	NA	36	NC	NA	62	DP 64	DET 24	88	NC	NA
11	NC	NA	37	NC	NA	63	NC	NA	89	NC	NA
12	NC	NA	38	NC	NA	64	NC	NA	90	NC	NA
13	NC	NA	39	DP 41	DET 1	65	NC	NA	91	NC	NA
14	I15-4	INPUT GND	40	DP 42	DET 2	66	NC	NA	92	DC GND	OUTPUT GND
15	NC	NA	41	DP 43	DET 3	67	NC	NA	93	NC	NA
16	NC	NA	42	DP 44	DET 4	68	NC	NA	94	NC	NA
17	NC	NA	43	DP 45	DET 5	69	NC	NA	95	NC	NA
18	NC	NA	44	DP 46	DET 6	70	NC	NA	96	NC	NA
19	NC	NA	45	DP 47	DET 7	71	NC	NA	97	NC	NA
20	NC	NA	46	DP 48	DET 8	72	NC	NA	98	NC	NA
21	NC	NA	47	DP 49	DET 9	73	NC	NA	99	NC	NA
22	NC	NA	48	DP 50	DET 10	74	NC	NA	100	NC	NA
23	NC	NA	49	DP 51	DET 11	75	NC	NA	101	NC	NA
24	NC	NA	50	DP 52	DET 12	76	NC	NA	102	I15-3	DET RESET
25	NC	NA	51	DP 53	DET 13	77	NC	NA	103	NC	NA
26	NC	NA	52	DP 54	DET 14	78	NC	NA	104	DC GND	INPUT GND

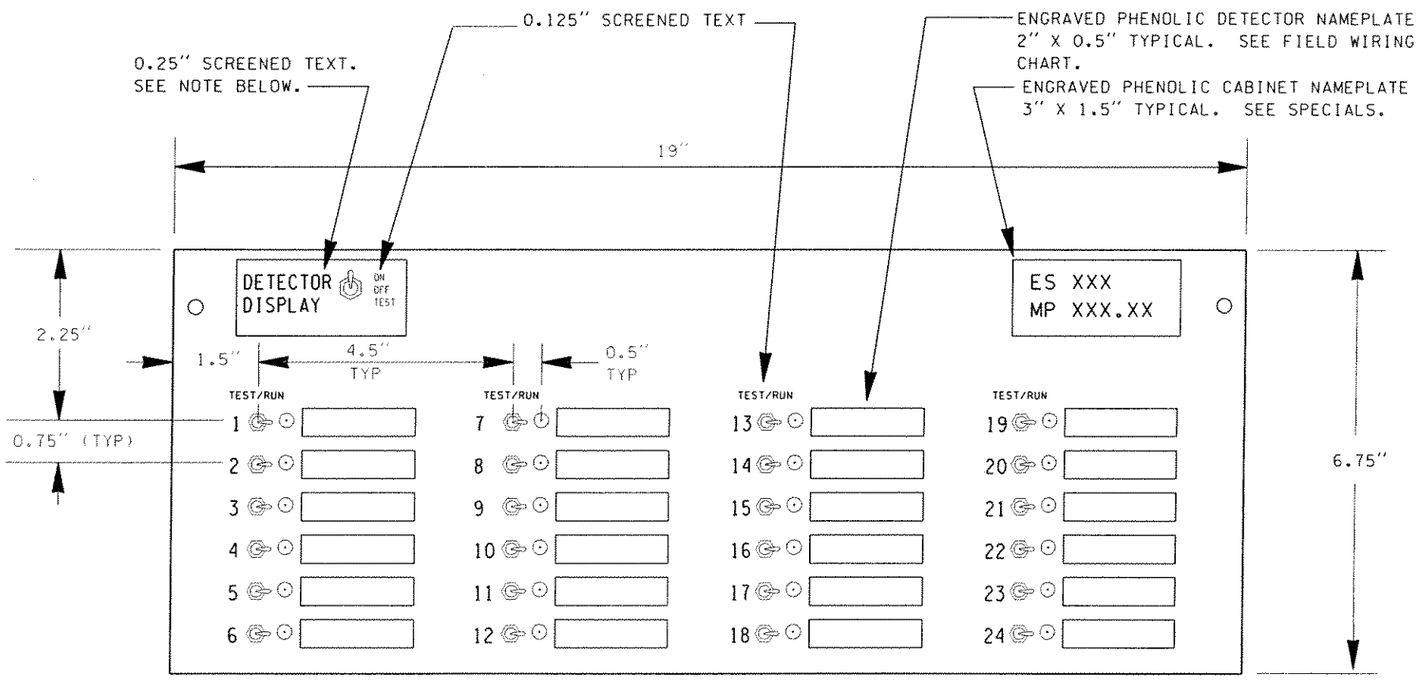

P1 CONNECTOR - FEMALE INPUT FILE TO DISPLAY PANEL		
P1 PIN#	CONNECTION	FUNCTION
1	DP1	DET. 1
2	DP2	DET. 2
3	DP3	DET. 3
4	DP4	DET. 4
5	DP5	DET. 5
6	DP6	DET. 6
7	DP7	DET. 7
8	DP8	DET. 8
9	DP9	DET. 9
10	DP10	DET.10
11	DP11	DET.11
12	DP12	DET.12
13	DP13	DET.13
14	DP14	DET.14
15	DP15	DET.15
16	DP16	DET.16
17	DP17	DET.17
18	DP18	DET.18
19	DP19	DET.19
20	DP20	DET.20
21	DP21	DET.21
22	DP22	DET.22
23	DP23	DET.23
24	DP24	DET.24
25	NC	NA
26	NC	NA
27	NC	NA
28	NC	NA
29	NC	NA
30	NC	NA
31	NC	NA
32	NC	NA
33	NC	NA
34	NC	NA
35	NC	NA
36	NC	NA
37	NC	NA
38	NC	NA
39	NC	NA
40	NC	NA
41	NC	NA
42	NC	NA
43	NC	NA
44	NC	NA
45	NC	NA
46	NC	NA
47	NC	NA
48	NC	NA
49	+24 VDC	POWER
50	LOGIC GND	GROUND

P2 CONNECTOR - MALE DISPLAY PANEL TO C1		
P2 PIN#	CONNECTION	FUNCTION
1	DP41	DET. 1
2	DP42	DET. 2
3	DP43	DET. 3
4	DP44	DET. 4
5	DP45	DET. 5
6	DP46	DET. 6
7	DP47	DET. 7
8	DP48	DET. 8
9	DP49	DET. 9
10	DP50	DET.10
11	DP51	DET.11
12	DP52	DET.12
13	DP53	DET.13
14	DP54	DET.14
15	DP55	DET.15
16	DP56	DET.16
17	DP57	DET.17
18	DP58	DET.18
19	DP59	DET.19
20	DP60	DET.20
21	DP61	DET.21
22	DP62	DET.22
23	DP63	DET.23
24	DP64	DET.24
25	NC	NA
26	NC	NA
27	NC	NA
28	NC	NA
29	NC	NA
30	NC	NA
31	NC	NA
32	NC	NA
33	NC	NA
34	NC	NA
35	NC	NA
36	NC	NA
37	NC	NA
38	NC	NA
39	NC	NA
40	NC	NA
41	NC	NA
42	NC	NA
43	NC	NA
44	NC	NA
45	NC	NA
46	NC	NA
47	NC	NA
48	NC	NA
49	NC	NA
50	NC	NA

KEY TO ABBREVIATIONS

CB = CIRCUIT BREAKER
CM = CURRENT MONITOR
DP = DISPLAY PANEL
MU = MONITOR UNIT
NA = NOT ASSIGNED
NC = NOT CONNECTED

C2 CONNECTOR (TO 170)		
PIN	CONNECTION	FUNCTION
L	DCE TXD	DATA TO 170
K	DCE RXD	DATA FROM 170
N	DCE SG	SIGNAL GROUND
D		
H		
M		

UNLESS OTHERWISE NOTED, ALL TEXT SHALL BE SCREENED DIRECTLY ON THE PANEL. TEXT SHALL BE 0.25" MINIMUM.

FILE NAME	C:\AAWork\Kirkland NickelStage I- ITS Master Details\330_Cabinet.dgn					
TIME	02:29:16 PM					
DATE	09/13/2004					
DESIGNED BY						
ENTERED BY						
CHECKED BY						
PROJ. ENGR.						
REGIONAL ADM.		REVISION	DATE	BY		

REGION NO.	STATE	FED.AID PROJ.NO.
10	WASH	
JOB NUMBER		
CONTRACT NO.		LOCATION NO.

P.E. STAMP BOX DATE

P.E. STAMP BOX DATE

Washington State Department of Transportation

ITS MASTER DETAIL ENGLISH

MODEL 330 CABINET (2OF2)

PLOT3

CAB2

SHEET OF SHEETS

MODEL 334 CABINET DETAILS

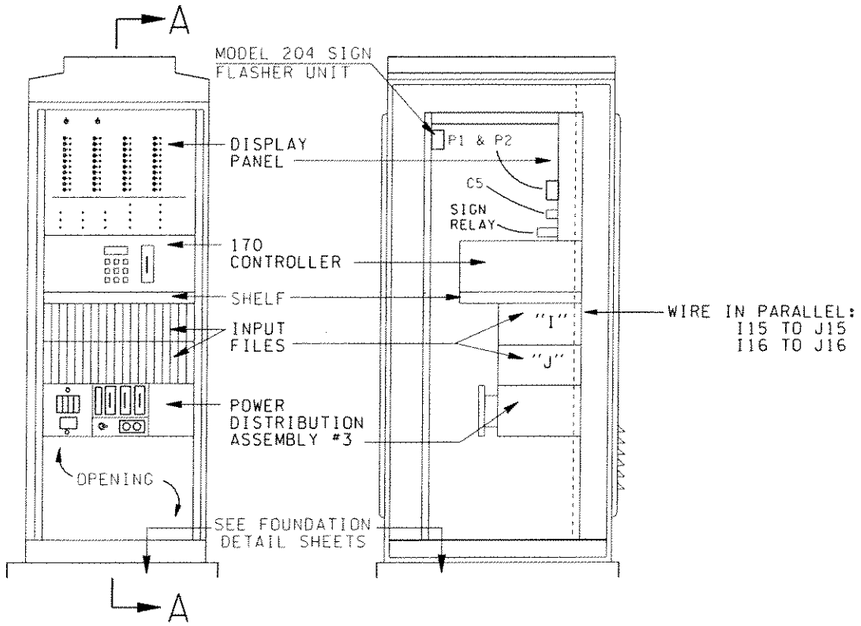

FRONT VIEW

SECTION A-A

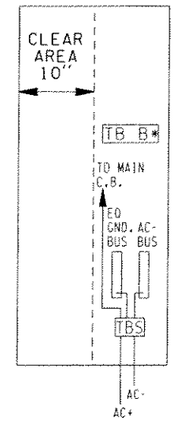

*TERMINAL BLOCK "B" SHALL BE 12 POSITION BARRIER TYPE, WITH POSITIONS UNASSIGNED

SERVICE PANEL DETAIL

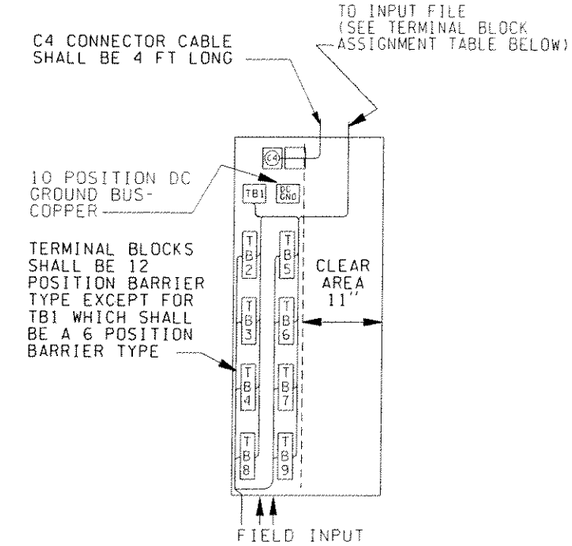

INPUT PANEL DETAIL

INPUT PANEL TERMINAL BLOCK ASSIGNMENT TABLE

POSITION	A	B	POSITION	A	B	POSITION	A	B	POSITION	A	B
TB1 1	T3-1	C4	TB4 1	FIELD DET*	I7D	TB6 1	FIELD DET*	I13D	TB8 1	FIELD DET*	J5D
TB1 2	TB1 1	C5,I15-1	TB4 2	*13	I7E	TB6 2	*25	I13E	TB8 2	*37	J5E
TB1 3	TB1 2	C6	TB4 3	FIELD DET*	I7J	TB6 3	FIELD DET*	I13J	TB8 3	FIELD DET*	J5J
TB1 4	N/A	N/A	TB4 4	*14	I7K	TB6 4	*26	I13K	TB8 4	*38	J5K
TB1 5	N/A	N/A	TB4 5	FIELD DET*	I8D	TB6 5	FIELD DET*	I14D	TB8 5	FIELD DET*	J6D
TB1 6	N/A	N/A	TB4 6	*15	I8E	TB6 6	*27	I14E	TB8 6	*39	J6E
TB2 1	FIELD DET*	I1D	TB4 7	FIELD DET*	I8J	TB6 7	FIELD DET*	I14J	TB8 7	FIELD DET*	J6J
TB2 2	*1	I1E	TB4 8	*16	I8K	TB6 8	*28	I14K	TB8 8	*40	J6K
TB2 3	FIELD DET*	I1J	TB4 9	FIELD DET*	I9D	TB6 9	FIELD DET*	J1D	TB8 9	N/A	N/A
TB2 4	*2	I1K	TB4 10	*17	I9E	TB6 10	*29	J1E	TB8 10	N/A	N/A
TB2 5	FIELD DET*	I2D	TB4 11	FIELD DET*	I9J	TB6 11	FIELD DET*	J1J	TB8 11	N/A	N/A
TB2 6	*3	I2E	TB4 12	*18	I9K	TB6 12	*30	J1K	TB8 12	N/A	N/A
TB2 7	FIELD DET*	I2J	TB5 1	FIELD DET*	I10D	TB7 1	FIELD DET*	J2D	TB9 1	AUDIO IN	C2-A
TB2 8	*4	I2K	TB5 2	*19	I10E	TB7 2	*31	J2E	TB9 2	(FROM CENTRAL)	C2-B
TB2 9	FIELD DET*	I3D	TB5 3	FIELD DET*	I10J	TB7 3	FIELD DET*	J2J	TB9 3	AUDIO OUT	C2-C
TB2 10	*5	I3E	TB5 4	*20	I10K	TB7 4	*32	J2K	TB9 4	(TO CENTRAL)	C2-D
TB2 11	FIELD DET*	I3J	TB5 5	FIELD DET*	I11D	TB7 5	FIELD DET*	J3D	TB9 5	N/A	N/A
TB2 12	*6	I3K	TB5 6	*21	I11E	TB7 6	*33	J3E	TB9 6	N/A	N/A
TB3 1	FIELD DET*	I4D	TB5 7	FIELD DET*	I11J	TB7 7	FIELD DET*	J3J	TB9 7	N/A	N/A
TB3 2	*7	I4E	TB5 8	*22	I11K	TB7 8	*34	J3K	TB9 8	N/A	N/A
TB3 3	FIELD DET*	I4J	TB5 9	FIELD DET*	I12D	TB7 9	FIELD DET*	J4D	TB9 9	N/A	N/A
TB3 4	*8	I4K	TB5 10	*23	I12E	TB7 10	*35	J4E	TB9 10	N/A	N/A
TB3 5	FIELD DET*	I5D	TB5 11	FIELD DET*	I12J	TB7 11	FIELD DET*	J4J	TB9 11	N/A	N/A
TB3 6	*9	I5E	TB5 12	*24	I12K	TB7 12	*36	J4K	TB9 12	N/A	N/A
TB3 7	FIELD DET*	I5J									
TB3 8	*10	I5K									
TB3 9	FIELD DET*	I6D									
TB3 10	*11	I6E									
TB3 11	FIELD DET*	I6J									
TB3 12	*12	I6K									

LEGEND

- TH THERMOSTAT
- CIRCUIT BREAKER
- R RECEPTACLE
- RELAY COIL
- S = SIGN
- T = TRANSFER
- RELAY, CONTACT N.C.
- RELAY, CONTACT N.O.
- SURGE PROTECTION
- SWITCH
- SWITCH, N.C.
- DC GROUND
- EQUIPMENT GROUND
- TR TRANSFER RELAY
- SR SIGN RELAY

CABINET ONE LINE DIAGRAM - POWER

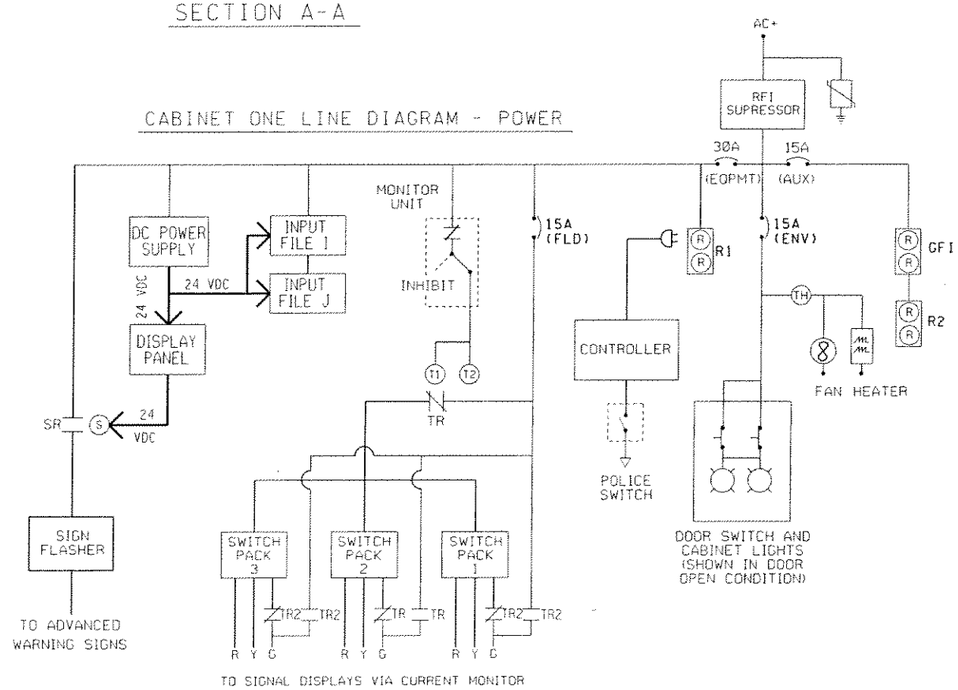

INPUT FILE (REAR VIEW)

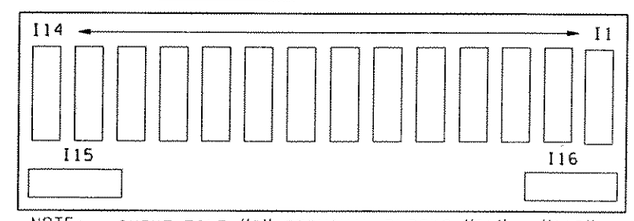

NOTE: INPUT FILE "I" TERMINAL BLOCKS "I1" - "I16"
INPUT FILE "J" TERMINAL BLOCKS "J1" - "J16"

FILE NAME	C:\AAWork\Kirkland NickelStage I- ITS Master Details\Datastation.dgn				
TIME	04:12:53 PM				
DATE	09/13/2004				
DESIGNED BY					
ENTERED BY					
CHECKED BY					
PROJ. ENGR.					
REGIONAL ADM.		REVISION	DATE	BY	

REGION NO.	STATE	FED.AID PROJ.NO.
10	WASH	
JOB NUMBER		
CONTRACT NO.		LOCATION NO.

P.E. STAMP BOX DATE

P.E. STAMP BOX DATE

Washington State Department of Transportation

PLOT1

SHEET OF SHEETS

CONNECTOR C1P AND C1S

PIN	CONNECT TO	FUNCTION	PIN	CONNECT TO	FUNCTION	PIN	CONNECT TO	FUNCTION	PIN	CONNECT TO	FUNCTION
1	DC GRD	DC GROUND	27	NC	NA	53	DP 55	DET 15	79	DP 77/C4-6	DET37/CM1G
2	C6-1	SWPK1-RED	28	NC	NA	54	DP 56	DET 16	80	DP 78/C4-7	DET38/CM3R
3	C6-2	SWPK1-GRN	29	NC	NA	55	DP 57	DET 17	81	DP 79/C4-8	DET39/CM3Y
4	C6-3	SWPK2-RED	30	NC	NA	56	DP 58	DET 18	82	DP 80/C4-9	DET40/CM3G
5	C6-4	SWPK2-YEL	31	NC	NA	57	DP 59	DET 19	83	C5-1	DP REMOTE
6	C6-5	SWPK2-GRN	32	NC	NA	58	DP 60	DET 20	84	C5-2	NA
7	C6-6	SWPK3-RED	33	NC	NA	59	DP 61	DET 21	85	C5-3	DP TRAFFIC
8	C6-7	SWPK3-YEL	34	NC	NA	60	DP 62	DET 22	86	C5-4	DP CLOCK
9	C6-8	SWPK3-GRN	35	NC	NA	61	DP 63	DET 23	87	C5-5	DP TELEMETRY
10	NC	NA	36	NC	NA	62	DP 64	DET 24	88	C5-6	DP ECHO
11	NC	NA	37	C6-9	SWPK1-YEL	63	C4-1	CM2-RED	89	C5-7	DP CONFLICT
12	NC	NA	38	NC	NA	64	C4-2	CM2-YEL	90	C5-8	DP DET FAILED
13	NC	NA	39	DP 41	DET 1	65	C4-3	CM2-GRN	91	C5-9	DP RED L1
14	I15-4	INPUT GND	40	DP 42	DET 2	66	PC-3	POLICE CONTROL	92	DC GND	OUTPUT GND
15	NC	NA	41	DP 43	DET 3	67	DP 65	DET 25	93	C5-10	SIGN-AUTO/DP METER
16	NC	NA	42	DP 44	DET 4	68	DP 66	DET 26	94	C5-11	DP RED L2
17	NC	NA	43	DP 45	DET 5	69	DP 67	DET 27	95	C5-12	DP YEL L2
18	NC	NA	44	DP 46	DET 6	70	DP 68	DET 28	96	C5-13	DP GRN L2
19	NC	NA	45	DP 47	DET 7	71	DP 69	DET 29	97	C5-14	DP YEL L1
20	NC	NA	46	DP 48	DET 8	72	DP 70	DET 30	98	C5-15	DP GRN L1
21	NC	NA	47	DP 49	DET 9	73	DP 71	DET 31	99	C5-16	DP RED L3
22	NC	NA	48	DP 50	DET 10	74	DP 72	DET 32	100	C5-17	DEP YEL L3
23	NC	NA	49	DP 51	DET 11	75	DP 73	DET 33	101	C5-18	DP GRN L3
24	NC	NA	50	DP 52	DET 12	76	DP 74	DET 34	102	I15-3	DET RESET
25	NC	NA	51	DP 53	DET 13	77	DP 75/C4-4	DET35/CM1R	103	C6-10	WATCHDOG
26	NC	NA	52	DP 54	DET 14	78	DP 76/C4-5	DET36/CM1Y	104	DC GND	INPUT GND

SIGN SWITCH

CONNECT TO	FUNCTION
C5-23	DC GND
SR-7	SR COIL
C5-10	AUTO METER

SHOWN IN AUTOMATIC MODE

NOTE: SIGN SWITCH SHALL BE 3-POSITION STATIONARY TYPE WITH 10 A CONTACT RATING.

POLICE CONTROL SWITCH

CONNECT TO	FUNCTION
NC	NA
DC GND	DC GND
C1-66	POLICE CTRL

SHOWN IN ON MODE

NOTE: POLICE CONTROL SWITCH SHALL BE 2-POSITION STATIONARY TYPE WITH 10 A CONTACT RATING.

SIGN RELAY

CONNECT TO	FUNCTION	CONNECT TO	FUNCTION
SS-2	SIGN CONTROL	NC	NA
NC	NA	NC	NA
T2-7	AC+	T1-3	SIGN OFF FIELD
C5-24	+24 VDC	T1-1	SIGN ON FIELD

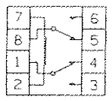

SHOWN DE-ENERGIZED (NOT METERING)

NOTE: RELAY SHALL OPERATE ON GROUND OUTPUT FROM 170 CONTROLLER. RELAY COIL SHALL DRAW LESS THAN 75 MILLIAMPERES.

RELAY SHALL BE DPDT AS SHOWN AND HAVE CONTACT RATING NOT LESS THAN 10 A CONTINUOUS DUTY.

AC WIRING FROM SIGN RELAY TO PDA SHALL BE 14 AWG.

KEY TO ABBREVIATIONS

CB = CIRCUIT BREAKER
CM = CURRENT MONITOR
DP = DISPLAY PANEL
MU = MONITOR UNIT
NA = NOT ASSIGNED
NC = NOT CONNECTED
PC = POLICE CONTROL SWITCH
SR = SIGN RELAY
SS = SIGN SWITCH
SWPK = SWITCH PACK
TR = TRANSFER RELAY

C2 CONNECTOR (TO 170)

PIN	CONNECTION	FUNCTION
L	DCE TXD	DATA TO 170
K	DCE RXD	DATA FROM 170
N	DCE SG	SIGNAL GROUND
D		
H		
M		

P1 CONNECTOR - FEMALE
INPUT FILE TO DISPLAY PANEL

P1 PIN#	CONNECTION	FUNCTION
1	DP1	DET. 1
2	DP2	DET. 2
3	DP3	DET. 3
4	DP4	DET. 4
5	DP5	DET. 5
6	DP6	DET. 6
7	DP7	DET. 7
8	DP8	DET. 8
9	DP9	DET. 9
10	DP10	DET.10
11	DP11	DET.11
12	DP12	DET.12
13	DP13	DET.13
14	DP14	DET.14
15	DP15	DET.15
16	DP16	DET.16
17	DP17	DET.17
18	DP18	DET.18
19	DP19	DET.19
20	DP20	DET.20
21	DP21	DET.21
22	DP22	DET.22
23	DP23	DET.23
24	DP24	DET.24
25	DP25	DET.25
26	DP26	DET.26
27	DP27	DET.27
28	DP28	DET.28
29	DP29	DET.29
30	DP30	DET.30
31	DP31	DET.31
32	DP32	DET.32
33	DP33	DET.33
34	DP34	DET.34
35	DP35	DET.35
36	DP36	DET.36
37	DP37	DET.37
38	DP38	DET.38
39	DP39	DET.39
40	DP40	DET.40
41	NC	NA
42	NC	NA
43	NC	NA
44	NC	NA
45	NC	NA
46	NC	NA
47	NC	NA
48	NC	NA
49	+24 VDC	POWER
50	LOGIC GND	GROUND

P2 CONNECTOR - MALE
DISPLAY PANEL TO C1

P2 PIN#	CONNECTION	FUNCTION
1	DP41	DET. 1
2	DP42	DET. 2
3	DP43	DET. 3
4	DP44	DET. 4
5	DP45	DET. 5
6	DP46	DET. 6
7	DP47	DET. 7
8	DP48	DET. 8
9	DP49	DET. 9
10	DP50	DET.10
11	DP51	DET.11
12	DP52	DET.12
13	DP53	DET.13
14	DP54	DET.14
15	DP55	DET.15
16	DP56	DET.16
17	DP57	DET.17
18	DP58	DET.18
19	DP59	DET.19
20	DP60	DET.20
21	DP61	DET.21
22	DP62	DET.22
23	DP63	DET.23
24	DP64	DET.24
25	DP65	DET.25
26	DP66	DET.26
27	DP67	DET.27
28	DP68	DET.28
29	DP69	DET.29
30	DP70	DET.30
31	DP71	DET.31
32	DP72	DET.32
33	DP73	DET.33
34	DP74	DET.34
35	DP75	DET.35
36	DP76	DET.36
37	DP77	DET.37
38	DP78	DET.38
39	DP79	DET.39
40	DP80	DET.40
41	NC	NA
42	NC	NA
43	NC	NA
44	NC	NA
45	NC	NA
46	NC	NA
47	NC	NA
48	NC	NA
49	NC	NA
50	NC	NA

C4 CONNECTOR (TO CURRENT MONITOR)

PIN	CONNECTION	FUNCTION
1	C1-63	CM2-RED
2	C1-64	CM2-YEL
3	C1-65	CM2-GRN
4	C1-77	CM1-RED
5	C1-78	CM1-YEL
6	C1-79	CM1-GRN
7	C1-80	CM3-RED
8	C1-81	CM3-YEL
9	C1-82	CM3-GRN
10	C1-36	NA
11	NC	NA
12	NC	NA
13	NC	NA
14	NC	NA
15	NC	NA
16	NC	NA
17	C1-70	NA
18	C1-71	NA
19	C1-72	NA
20	NC	NA
21	C5-19	NA
22	C5-20	NA
23	DC GND	DC GROUND
24	TB1-1B	+24 VDC

C5 CONNECTOR (TO DISPLAY PANEL)

PIN	CONNECTION	FUNCTION
1	C1-83	DP -REMOTE
2	C1-84	DP -NA
3	C1-85	DP -STANDBY TRAFFIC
4	C1-86	DP -STANDBY CLOCK
5	C1-87	DP -TELEMETRY
6	C1-88	DP -ECHO
7	C1-89	DP -CONFLICT
8	C1-90	DP -DET. FAILED
9	C1-91	DP -RED LANE 1
10	C1-93	DP -METERING, SS-3
11	C1-94	DP -RED LANE 2
12	C1-95	DP -YELLOW LANE 2
13	C1-96	DP -GREEN LANE 2
14	C1-97	DP -YELLOW LANE 1
15	C1-98	DP -GREEN LANE 1
16	C1-99	DP -RED LANE 3
17	C1-100	DP -YELLOW LANE 3
18	C1-101	DP -GREEN LANE 3
19	NC	NA
20	NC	NA
21	NC	NA
22	NC	NA
23	DC GND	SS-1
24	TB1-2B	+24 VDC

C6 CONNECTOR (TO PDA)

PIN	CONNECTION	FUNCTION
1	C1-2	SWPK1-RED
2	C1-3	SWPK1-GRN
3	C1-4	SWPK2-RED
4	C1-5	SWPK2-YEL
5	C1-6	SWPK2-GRN
6	C1-7	SWPK3-RED
7	C1-8	SWPK3-YEL
8	C1-9	SWPK3-GRN
9	C1-37	SWPK1-YEL
10	C1-103	WATCHDOG MU
11	NC	NA
12	NC	NA
13	NC	NA
14	NC	NA
15	NC	NA
16	NC	NA
17	NC	NA
18	NC	NA
19	NC	NA
20	NC	NA
21	NC	NA
22	NC	NA
23	DC GND	DC GROUND
24	TB1-3B	+24 VDC

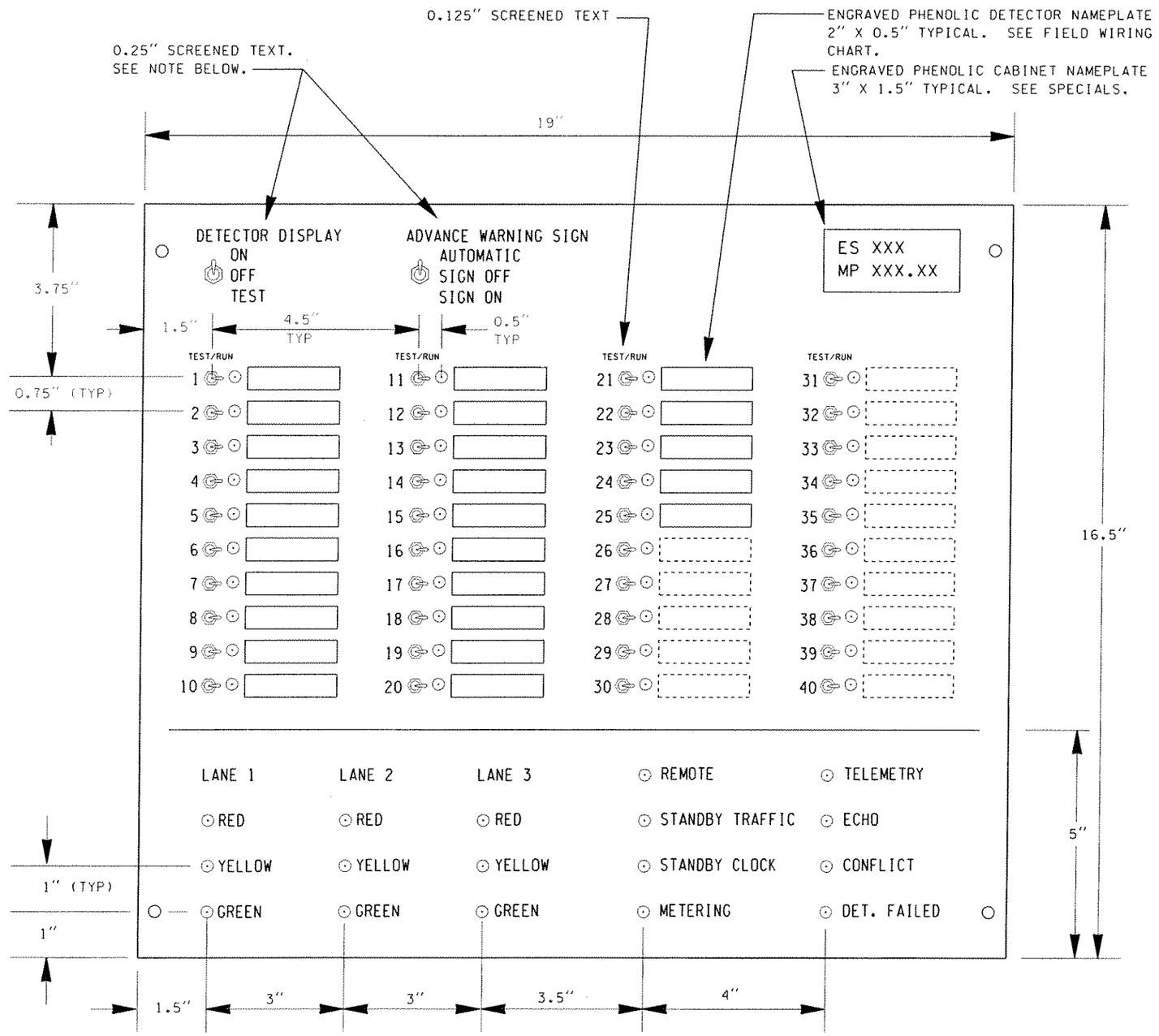

DISPLAY PANEL

NO SCALE

UNLESS OTHERWISE NOTED, ALL TEXT SHALL BE SCREENED DIRECTLY ON THE PANEL. TEXT SHALL BE 0.25" MINIMUM.

POWER DISTRIBUTION ASSEMBLY (PDA) #3

(REAR VIEW)

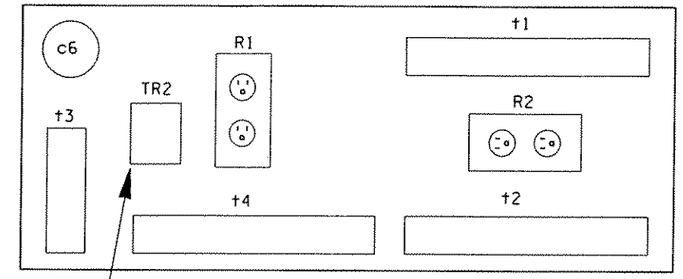

INSTALL MODEL 430 TRANSFER RELAY. WIRE AS SHOWN BELOW.

PDA #3 MODIFICATIONS

CONNECT:			FUNCTION
T2-8	TO	T4-6	TR OUTPUT TO FIELD GRN 2
T2-6	TO	MU-3	ENERGIZE TR WHEN MU IS NORMAL
T1-1, T1-2	TO	SR-3	FIELD OUTPUT - SIGN ON
T1-3, T1-4	TO	SR-4	FIELD OUTPUT - SIGN OFF

ADD TRANSFER RELAY #2 AS SHOWN.

TRANSFER RELAY

(FRONT PANEL OF PDA #3)

CONNECT TO	FUNCTION	CONNECT TO	FUNCTION
SWPK1-1	AC+ SUPPLY	SWPK2-7	GRN-2
CB 3	AC+	T4-6	GRN OUTPUT
NC	NA	TR-5	AC+
T2-6	MU-OK	T2-2	AC-

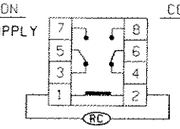

SHOWN DE-ENERGIZED
ENERGIZED BY MONITOR UNIT NORMAL

TRANSFER RELAY #2

(MODEL 430)

CONNECT TO	FUNCTION	CONNECT TO	FUNCTION
SWPK3-7	GRN-3	SWPK1-7	GRN-1
T4-3	GRN OUTPUT	T4-9	GRN OUTPUT
CB3	AC+	TR2-3	AC+
T2-6	MU-OK	T2-2	AC-

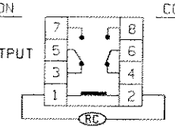

SHOWN DE-ENERGIZED
ENERGIZED BY MONITOR UNIT NORMAL

FILE NAME	C:\AAWork\Kirkland Nickel Stage I- ITS Master Details\Datastation.dgn					PLOT3
TIME	04:13:01 PM			REGION NO. 10 / STATE WASH	FED.AID PROJ.NO.	
DATE	09/13/2004					
DESIGNED BY				JOB NUMBER		
ENTERED BY						
CHECKED BY				CONTRACT NO.	LOCATION NO.	SHEET OF SHEETS
PROJ. ENGR.						
REGIONAL ADM.		REVISION	DATE / BY			

P.E. STAMP BOX — DATE

P.E. STAMP BOX — DATE

Washington State Department of Transportation

MODEL 334 CABINET DETAILS

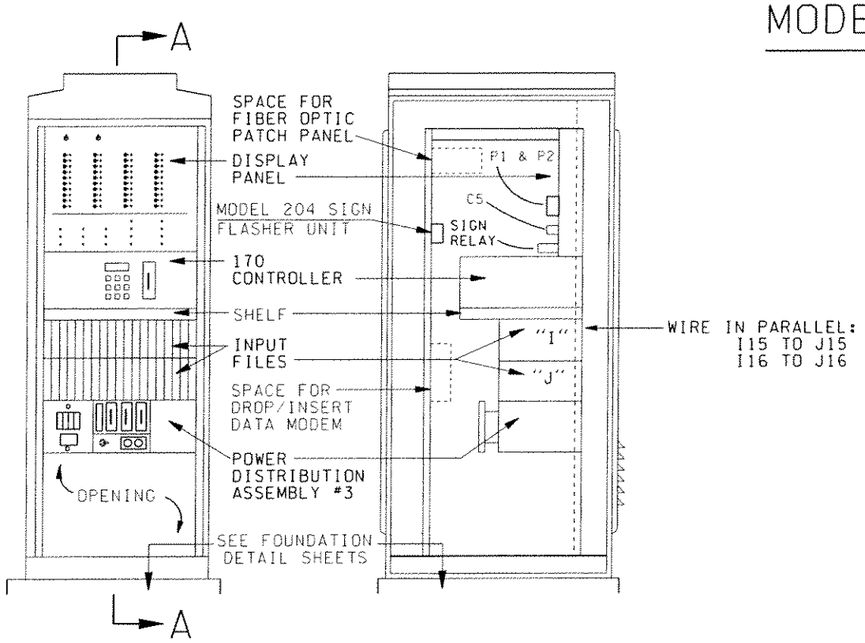

FRONT VIEW

SECTION A-A

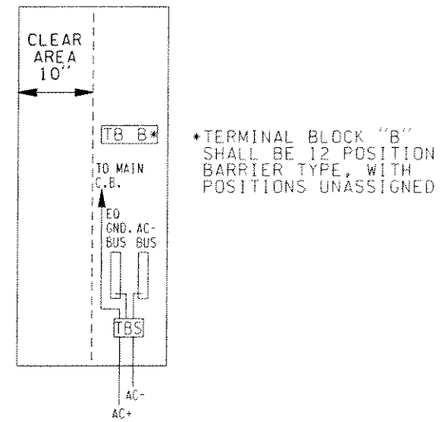

SERVICE PANEL DETAIL

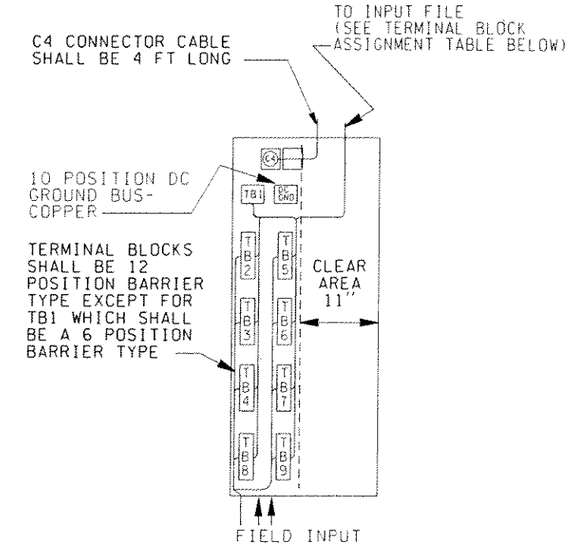

INPUT PANEL DETAIL

INPUT PANEL TERMINAL BLOCK ASSIGNMENT TABLE

POSITION	A	B	POSITION	A	B	POSITION	A	B	POSITION	A	B
TB1 1	T3-1	C4	TB4 1	FIELD DET*	I7D	TB6 1	FIELD DET*	I13D	TB8 1	FIELD DET*	J5D
TB1 2	TB1 1	C5,I15-1	TB4 2	*13	I7E	TB6 2	*25	I13E	TB8 2	*37	J5E
TB1 3	TB1 2	C6	TB4 3	FIELD DET*	I7J	TB6 3	FIELD DET*	I13J	TB8 3	FIELD DET*	J5J
TB1 4	N/A	N/A	TB4 4	*14	I7K	TB6 4	*26	I13K	TB8 4	*38	J5K
TB1 5	N/A	N/A	TB4 5	FIELD DET*	I8D	TB6 5	FIELD DET*	I14D	TB8 5	FIELD DET*	J6D
TB1 6	N/A	N/A	TB4 6	*15	I8E	TB6 6	*27	I14E	TB8 6	*39	J6E
TB2 1	FIELD DET*	I1D	TB4 7	FIELD DET*	I8J	TB6 7	FIELD DET*	I14J	TB8 7	FIELD DET*	J6J
TB2 2	*1	I1E	TB4 8	*16	I8K	TB6 8	*28	I14K	TB8 8	*40	J6K
TB2 3	FIELD DET*	I1J	TB4 9	FIELD DET*	I9D	TB6 9	FIELD DET*	J1D	TB8 9	N/A	N/A
TB2 4	*2	I1K	TB4 10	*17	I9E	TB6 10	*29	J1E	TB8 10	N/A	N/A
TB2 5	FIELD DET*	I2D	TB4 11	FIELD DET*	I9J	TB6 11	FIELD DET*	J1J	TB8 11	N/A	N/A
TB2 6	*3	I2E	TB4 12	*18	I9K	TB6 12	*30	J1K	TB8 12	N/A	N/A
TB2 7	FIELD DET*	I2J	TB5 1	FIELD DET*	I10D	TB7 1	FIELD DET*	J2D	TB9 1	AUDIO IN	C2-A
TB2 8	*4	I2K	TB5 2	*19	I10E	TB7 2	*31	J2E	TB9 2	(FROM CENTRAL)	C2-B
TB2 9	FIELD DET*	I3D	TB5 3	FIELD DET*	I10J	TB7 3	FIELD DET*	J2J	TB9 3	AUDIO OUT	C2-C
TB2 10	*5	I3E	TB5 4	*20	I10K	TB7 4	*32	J2K	TB9 4	(TO CENTRAL)	C2-D
TB2 11	FIELD DET*	I3J	TB5 5	FIELD DET*	I11D	TB7 5	FIELD DET*	J3D	TB9 5	N/A	N/A
TB2 12	*6	I3K	TB5 6	*21	I11E	TB7 6	*33	J3E	TB9 6	N/A	N/A
TB3 1	FIELD DET*	I4D	TB5 7	FIELD DET*	I11J	TB7 7	FIELD DET*	J3J	TB9 7	N/A	N/A
TB3 2	*7	I4E	TB5 8	*22	I11K	TB7 8	*34	J3K	TB9 8	N/A	N/A
TB3 3	FIELD DET*	I4J	TB5 9	FIELD DET*	I12D	TB7 9	FIELD DET*	J4D	TB9 9	N/A	N/A
TB3 4	*8	I4K	TB5 10	*23	I12E	TB7 10	*35	J4E	TB9 10	N/A	N/A
TB3 5	FIELD DET*	I5D	TB5 11	FIELD DET*	I12J	TB7 11	FIELD DET*	J4J	TB9 11	N/A	N/A
TB3 6	*9	I5E	TB5 12	*24	I12K	TB7 12	*36	J4K	TB9 12	N/A	N/A
TB3 7	FIELD DET*	I5J									
TB3 8	*10	I5K									
TB3 9	FIELD DET*	I6D									
TB3 10	*11	I6E									
TB3 11	FIELD DET*	I6J									
TB3 12	*12	I6K									

LEGEND

- TH THERMOSTAT
- CIRCUIT BREAKER
- R RECEPTACLE
- RELAY COIL
- S = SIGN
- T = TRANSFER
- RELAY, CONTACT N.C.
- RELAY, CONTACT N.O.
- SURGE PROTECTION
- SWITCH
- SWITCH, N.C.
- DC GROUND
- EQUIPMENT GROUND
- TR TRANSFER RELAY
- SR SIGN RELAY

CABINET ONE LINE DIAGRAM - POWER

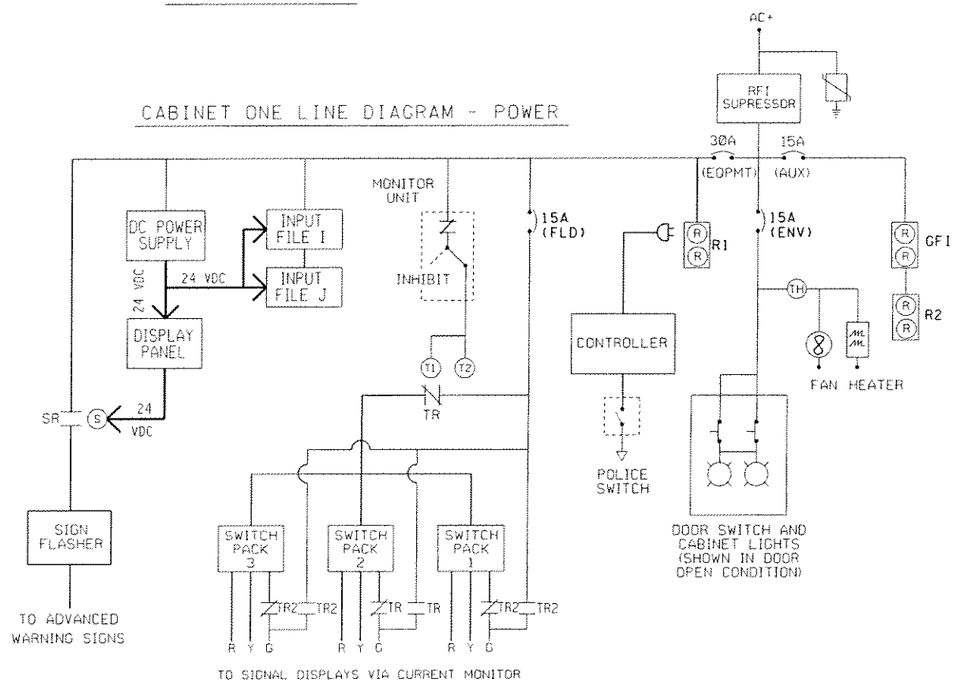

INPUT FILE (REAR VIEW)

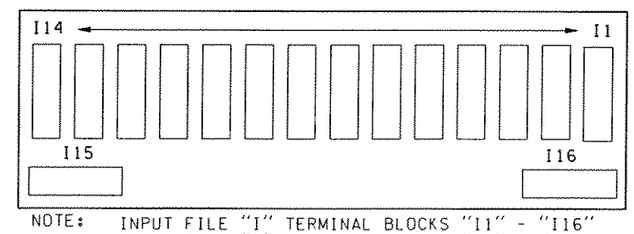

NOTE: INPUT FILE "I" TERMINAL BLOCKS "I1" - "I16"
INPUT FILE "J" TERMINAL BLOCKS "J1" - "J16"

FILE NAME	C:\AAWork\Kirkland Nickel Stage I- ITS Master Details\Datastation.dgn				
TIME	04:13:05 PM				
DATE	09/13/2004				
DESIGNED BY					
ENTERED BY					
CHECKED BY					
PROJ. ENGR.					
REGIONAL ADM.		REVISION	DATE	BY	

REGION NO.	STATE	FED.AID PROJ.NO.
10	WASH	
JOB NUMBER		
CONTRACT NO.		LOCATION NO.

P.E. STAMP BOX — DATE

P.E. STAMP BOX — DATE

Washington State Department of Transportation

PLOT11

SHEET OF SHEETS

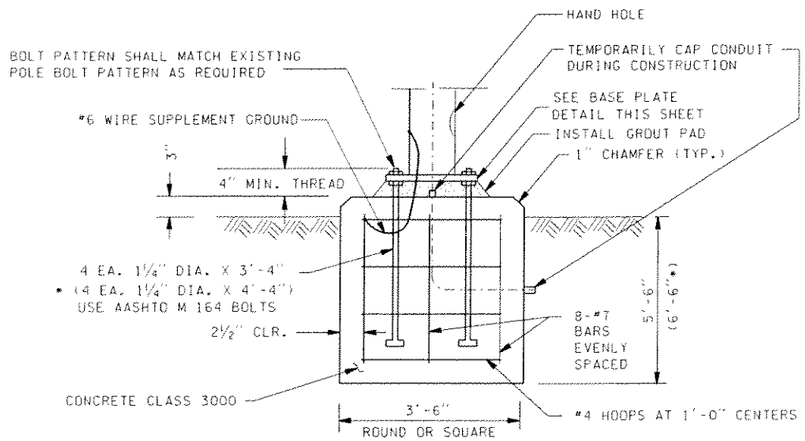

* 50' POLE

CAMERA POLE FOUNDATION DETAIL

CAMERA POLE SCHEDULE

CCTV#	LINE	STATION	OFFSET	LT/RT	POLE HEIGHT	FOUNDATION DEPTH	SHEET NO.

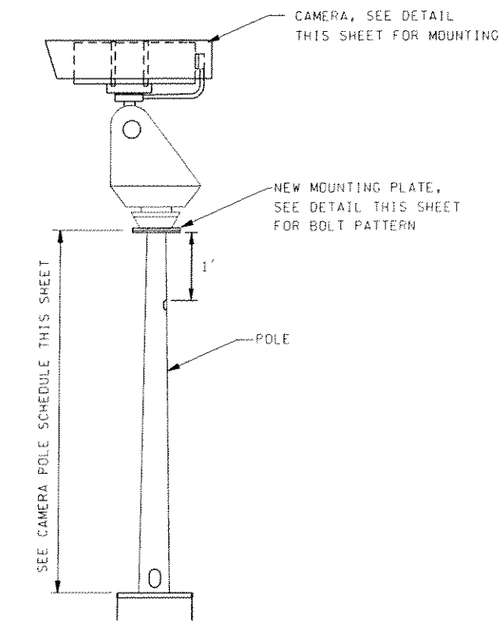

CAMERA POLES (SINGLE CAMERA)

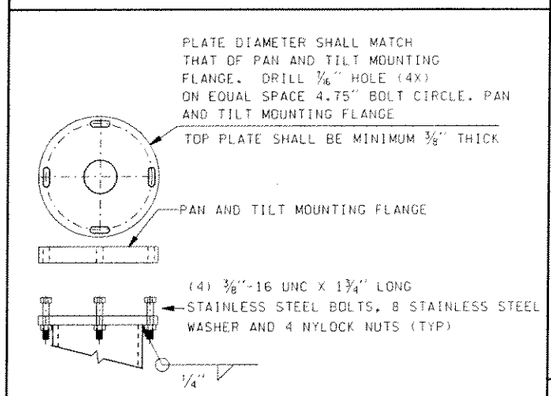

CAMERA MOUNTING PLATE DETAIL

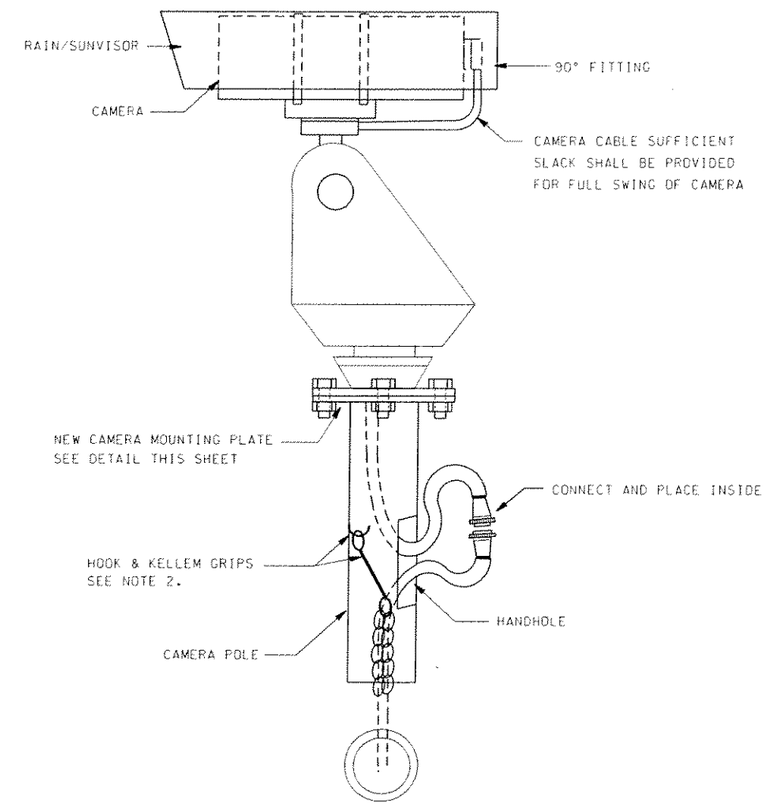

TYPICAL CAMERA MOUNTING DETAIL

*SEE NOTE 5

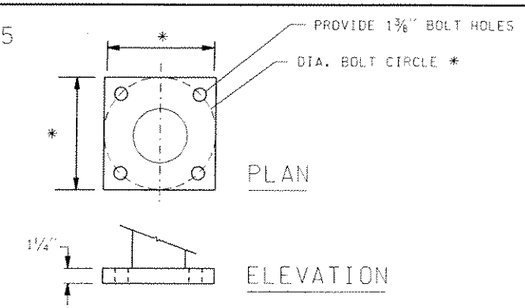

BASE PLATE DETAIL

GENERAL NOTES:

1. PRIOR TO CONSTRUCTION, THE CONTRACTOR SHALL SUBMIT TO THE ENGINEER FOR HIS WRITTEN APPROVAL ALL DETAILS OF CABLES AND CONNECTIONS OF TV CAMERA POLES.
2. CABLES INSIDE THE POLE SHALL BE SUSPENDED SUCH THAT NONE OF THE CABLE WEIGHT IS TRANSFERRED TO THE CABLE CONNECTIONS OR TERMINATIONS.
3. AT A FOUR SQUARE FOOT PROJECTED AREA 2' ABOVE TOP OF CAMERA POLE, DEFLECTION SHALL NOT EXCEED: 2.0 INCHES IN 35 MPH WINDS
   5.0 INCHES IN 70 MPH WINDS
4. ALL HARDWARE SHALL BE STAINLESS STEEL OR GALVANIZED.
5. BASE PLATE SIZE AND DIAMETER BOLT CIRCLE PER MANUFACTURER'S RECOMENDATION.

FILE NAME	C:\AAWork\Kirkland NickelStage I- ITS Master Details\Camera.dgn						PLOT11
TIME	01:29:10 PM			REGION NO. 10	STATE WASH	FED.AID PROJ.NO.	
DATE	09/13/2004						
DESIGNED BY				JOB NUMBER			SHEET
ENTERED BY							OF
CHECKED BY				CONTRACT NO.	LOCATION NO.		SHEETS
PROJ. ENGR.							
REGIONAL ADM.	REVISION	DATE	BY				

P.E. STAMP BOX DATE

P.E. STAMP BOX DATE

Washington State Department of Transportation

DIGITAL CAMERA POLE MOUNTING

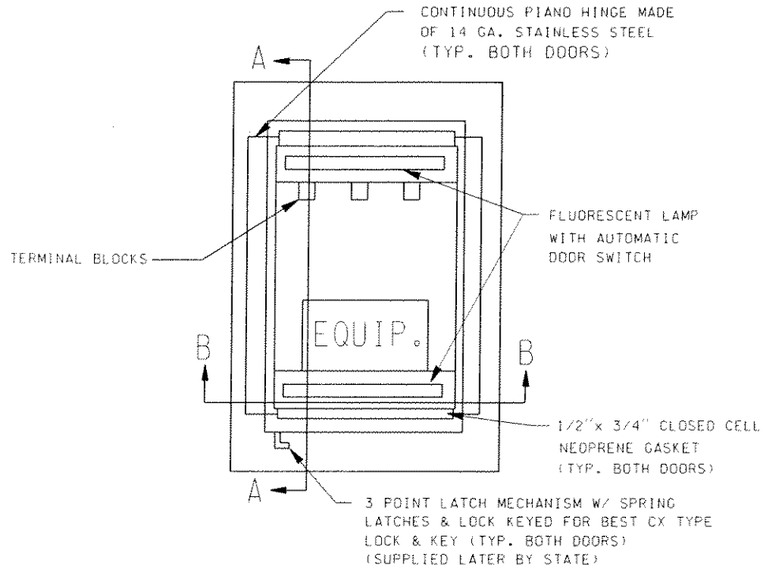

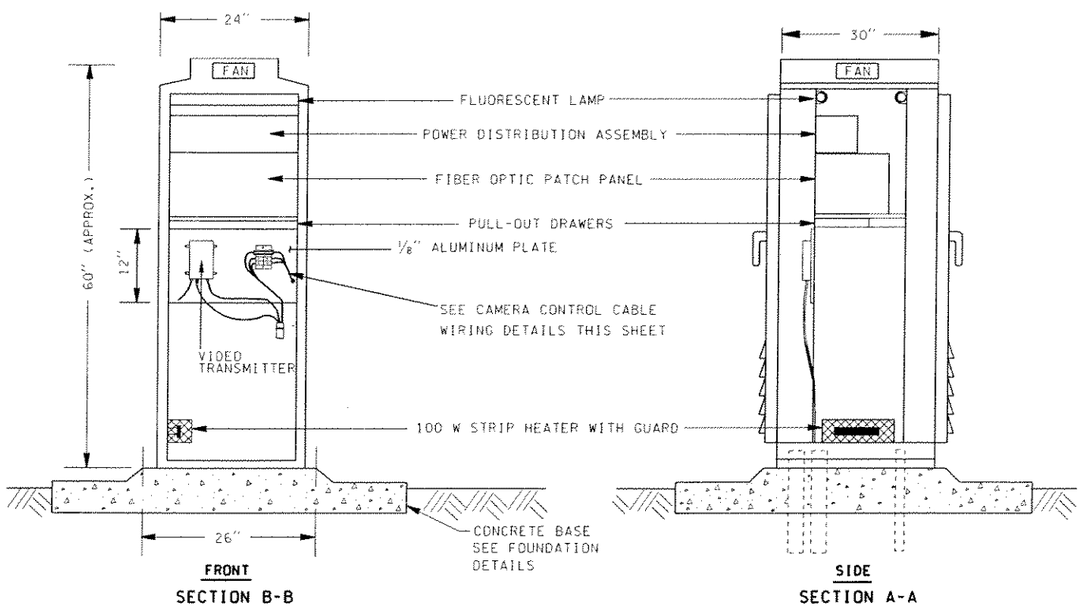

NOT TO SCALE

CAMERA CONTROL CABINET DETAILS

NOTE:
ALL WIRES SHALL BE TERMINATED ON THE TERMINAL BLOCKS.

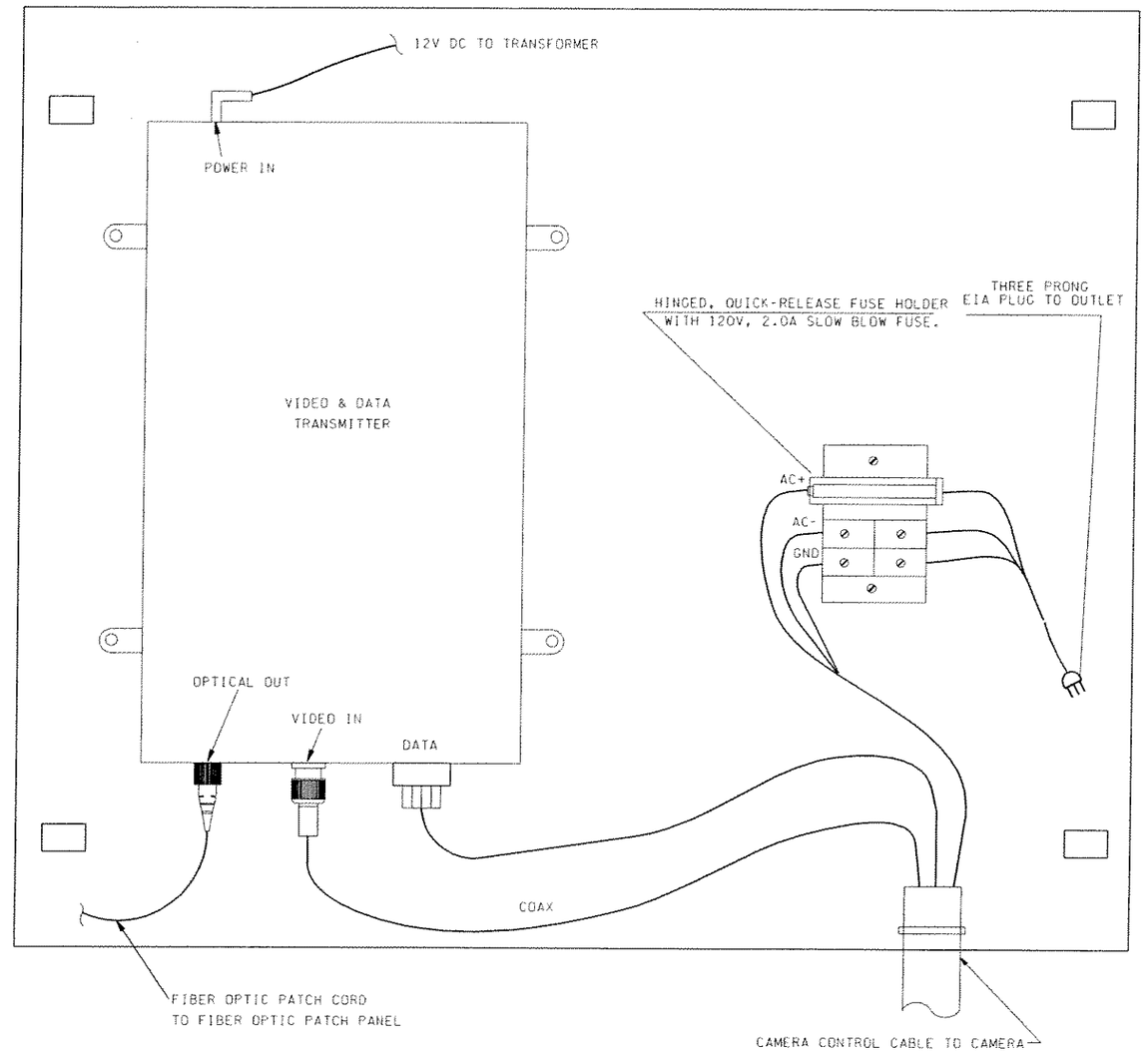

CAMERA CONTROL CABLE WIRING DETAILS

FILE NAME	C:\AAWork\Kirkland NickelStage I- ITS Master Details\Camera.dgn						PLOT12
TIME	01:29:14 PM			REGION NO. 10	STATE WASH	FED.AID PROJ.NO.	
DATE	09/13/2004			JOB NUMBER			
DESIGNED BY							
ENTERED BY							
CHECKED BY				CONTRACT NO.		LOCATION NO.	
PROJ. ENGR.							
REGIONAL ADM.		REVISION	DATE	BY			

P.E. STAMP BOX DATE

P.E. STAMP BOX DATE

Washington State Department of Transportation

DIGITAL CAMERA CABINET DETAILS

SHEET OF SHEETS

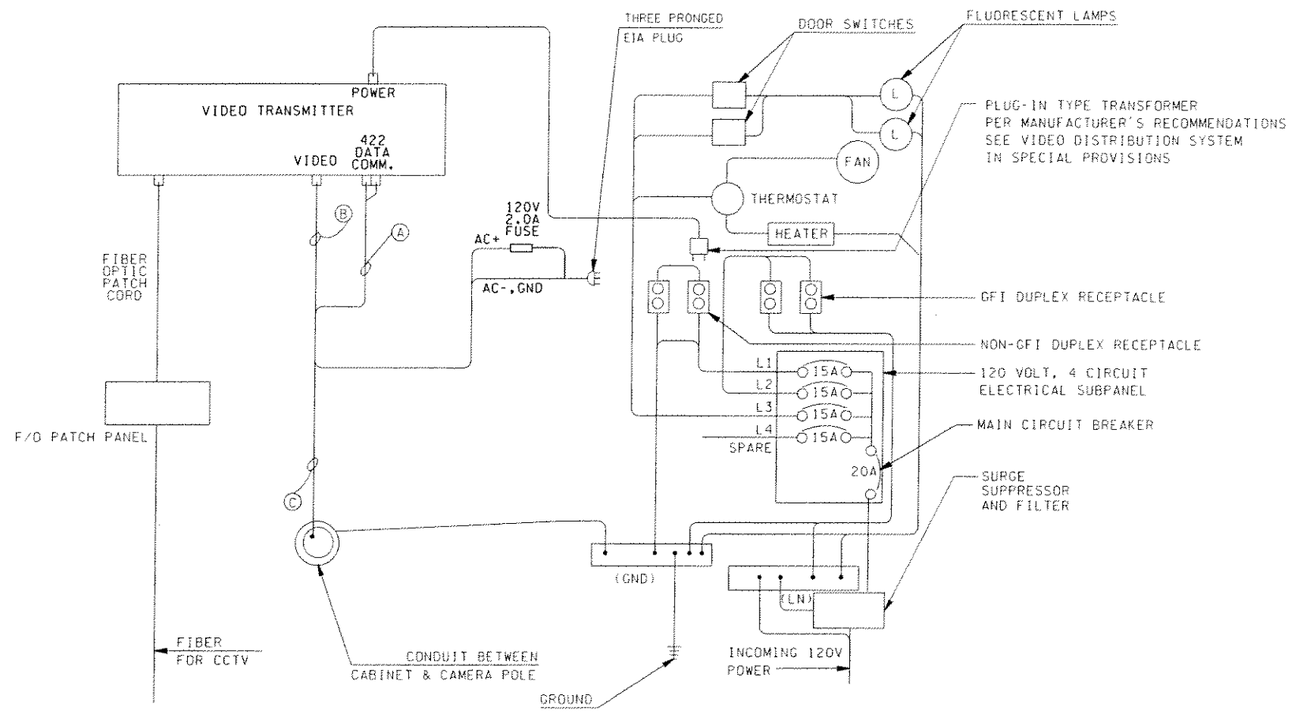

CAMERA CONTROL CABINET WIRING DIAGRAM

NOTES:

ALL CONDUCTORS SHALL BE #14 AWG UNLESS DESIGNATED OTHERWISE.
GROUNDING CONDUCTORS SHALL BE GREEN IN COLOR
CABLES SHALL BE AS FOLLOWS:

- Ⓐ RS422 DATA LINE
- Ⓑ CAMERA CABLE TO TERMINAL BLOCK
- Ⓒ CAMERA CONTROL CABLES TO CAMERA POLE

FILE NAME	C:\AAWork\Kirkland NickelStage I- ITS Master Details\Camera.dgn									PLOT13
TIME	01:29:18 PM				REGION NO. 10	STATE WASH	FED.AID PROJ.NO.			
DATE	09/13/2004									
DESIGNED BY					JOB NUMBER					
ENTERED BY										SHEET
CHECKED BY					CONTRACT NO.	LOCATION NO.				OF
PROJ. ENGR.										SHEETS
REGIONAL ADM.		REVISION	DATE	BY			P.E. STAMP BOX DATE	P.E. STAMP BOX DATE	Washington State Department of Transportation	DIGITAL CAMERA CABINET DETAILS

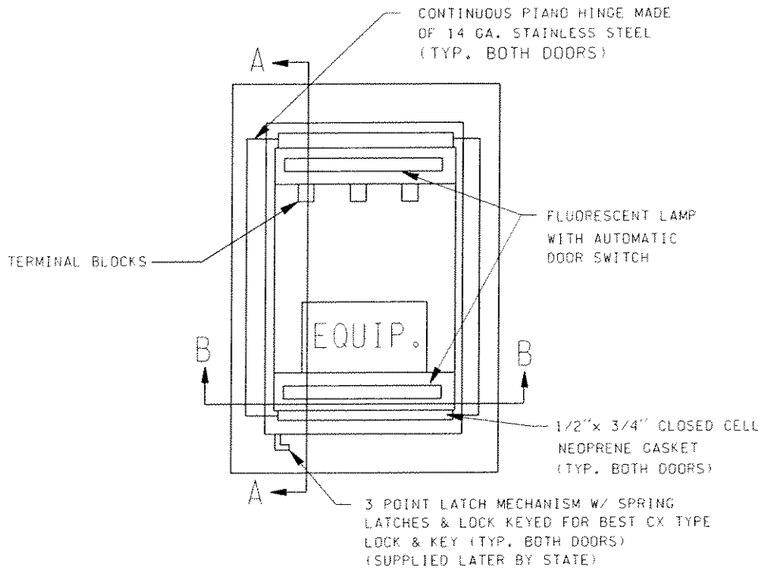

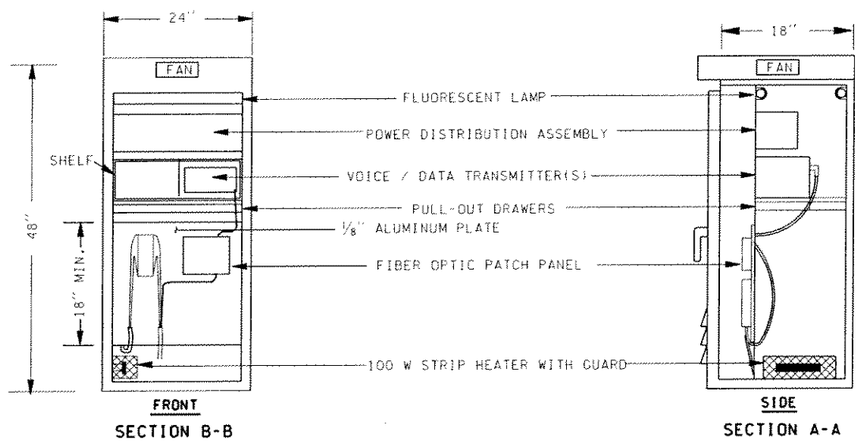

CAMERA CONTROL CABINET DETAILS

NOT TO SCALE

NOTE:
ALL WIRES SHALL BE TERMINATED ON THE TERMINAL BLOCKS.

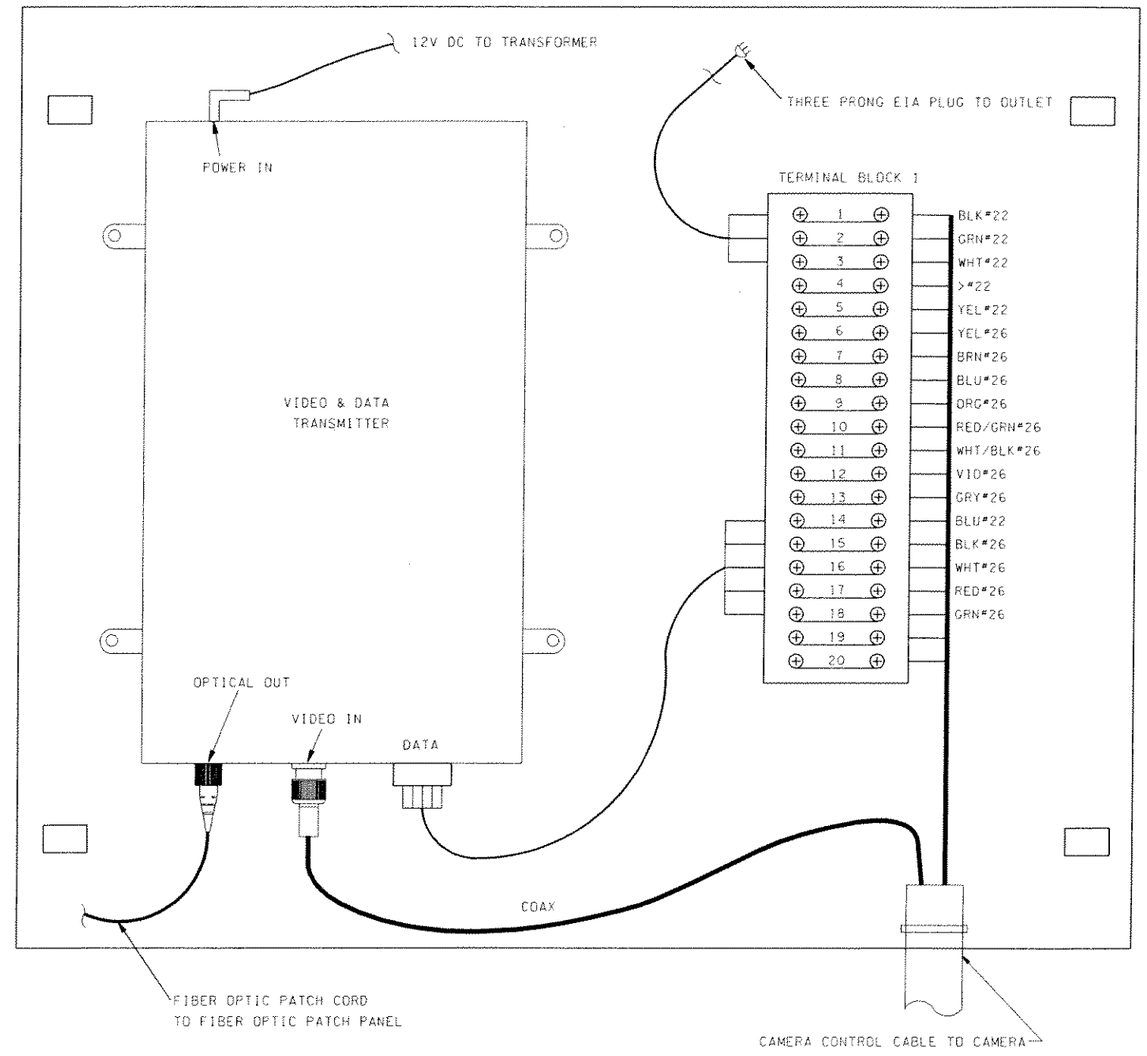

CAMERA CONTROL CABLE WIRING DETAILS

FILE NAME	C:\AAWork\Kirkland NickelStage I- ITS Master Details\Camera.dgn						PLOT14
TIME	01:29:22 PM			REGION NO. 10	STATE WASH	FED.AID PROJ.NO.	
DATE	09/13/2004			JOB NUMBER			
DESIGNED BY							
ENTERED BY				CONTRACT NO.		LOCATION NO.	SHEET OF SHEETS
CHECKED BY							
PROJ. ENGR.							
REGIONAL ADM.		REVISION	DATE	BY			

P.E. STAMP BOX DATE

P.E. STAMP BOX DATE

Washington State
Department of Transportation

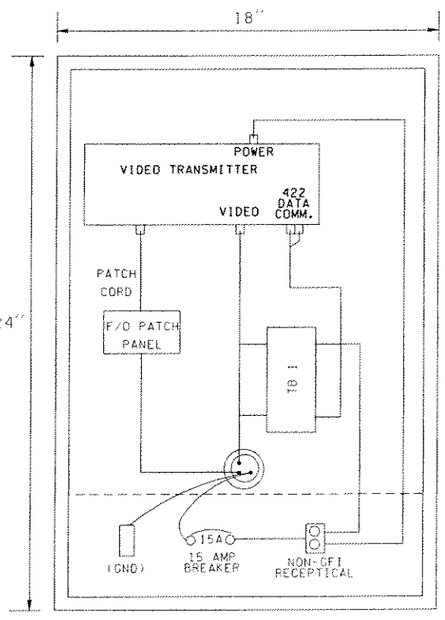

CAMERA CONTROL CABINET DETAILS

NOT TO SCALE

NOTE:
ALL WIRES SHALL BE TERMINATED ON THE TERMINAL BLOCKS.

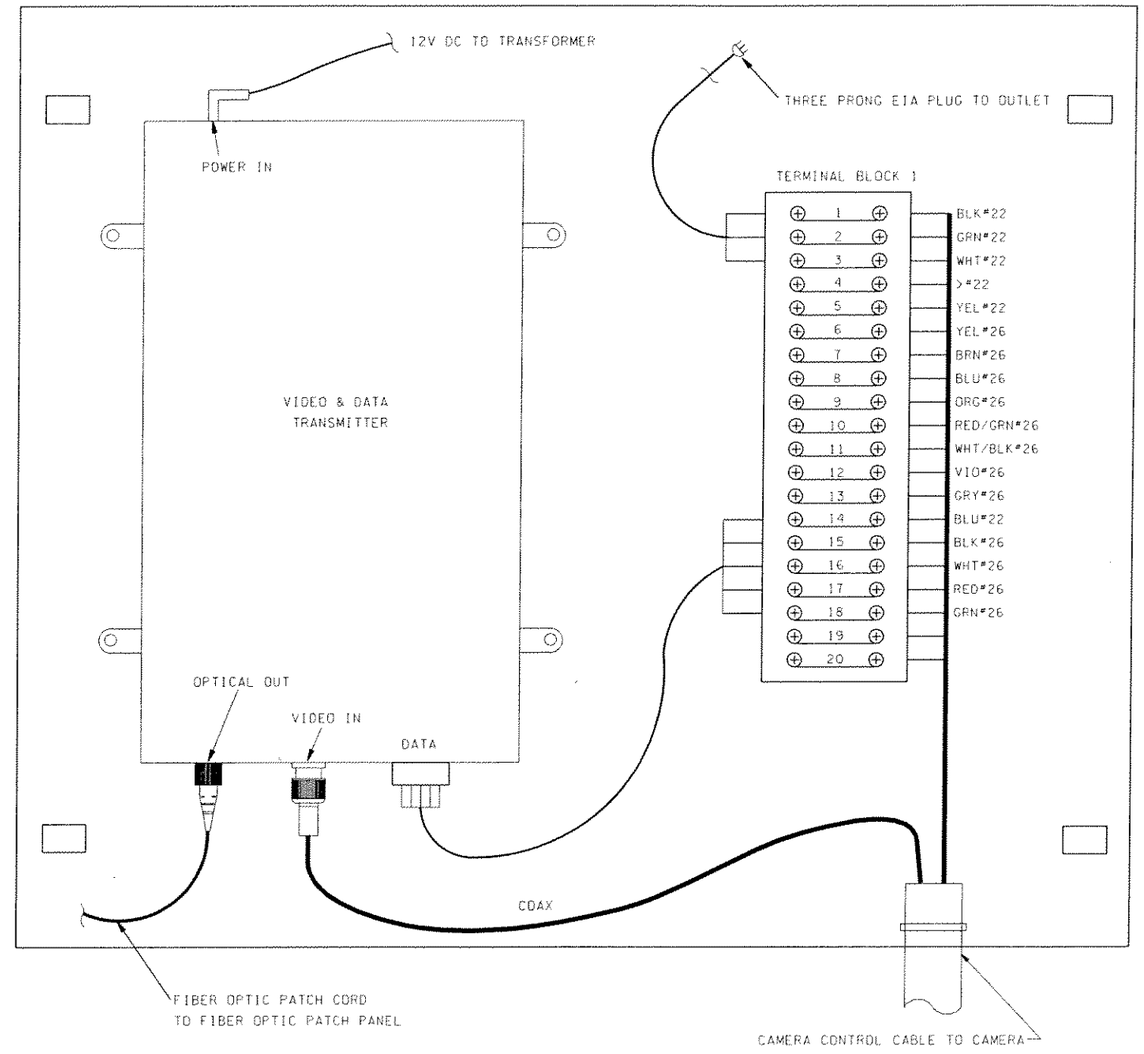

CAMERA CONTROL CABLE WIRING DETAILS

FILE NAME	C:\AAWork\Kirkland NickelStage I- ITS Master Details\Camera.dgn			REGION NO.	STATE	FED.AID PROJ.NO.	PLOT15
TIME	01:29:25 PM			10	WASH		
DATE	09/13/2004			JOB NUMBER			
DESIGNED BY							SHEET
ENTERED BY							OF
CHECKED BY				CONTRACT NO.		LOCATION NO.	SHEETS
PROJ. ENGR.							
REGIONAL ADM.		REVISION	DATE	BY			

P.E. STAMP BOX DATE

P.E. STAMP BOX DATE

Washington State Department of Transportation

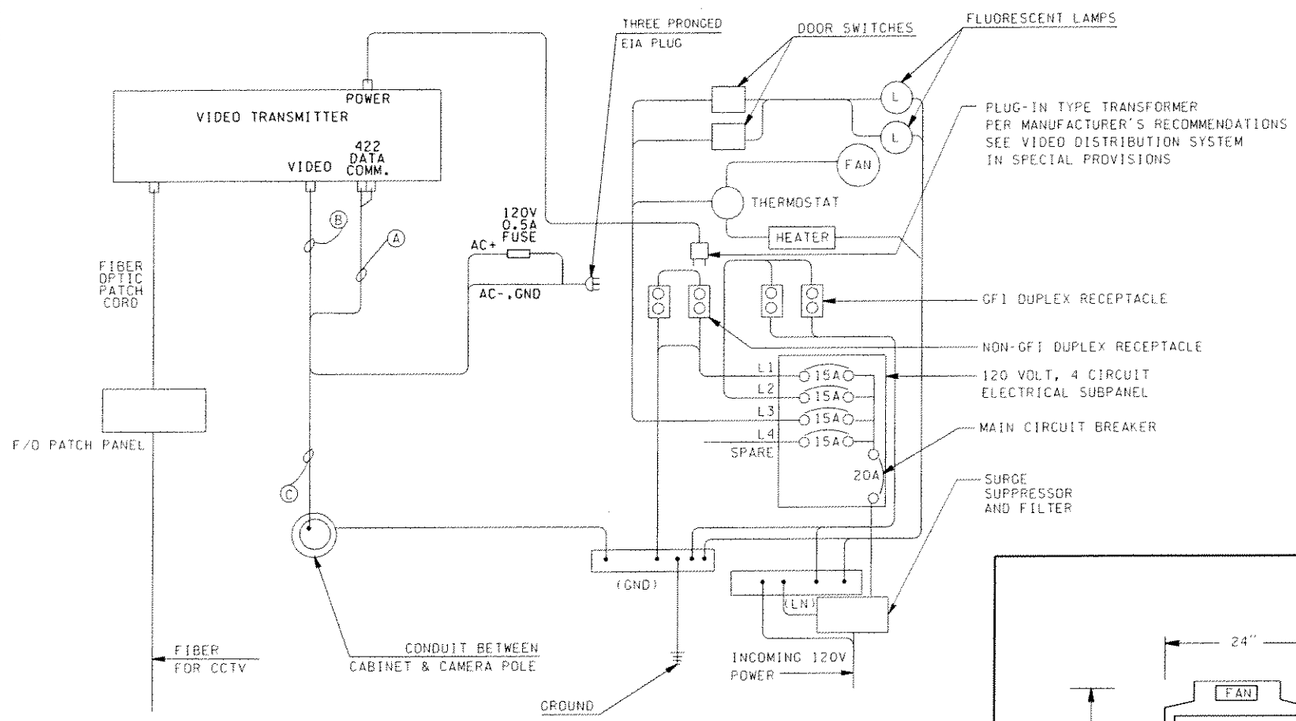

CAMERA CONTROL CABINET WIRING DIAGRAM

NOTES:

ALL CONDUCTORS SHALL BE #14 AWG UNLESS DESIGNATED OTHERWISE.
GROUNDING CONDUCTORS SHALL BE GREEN IN COLOR
CABLES SHALL BE AS FOLLOWS:

- Ⓐ RS422 DATA LINE
- Ⓑ CAMERA CABLE TO TERMINAL BLOCK
- Ⓒ CAMERA CONTROL CABLES TO CAMERA POLE

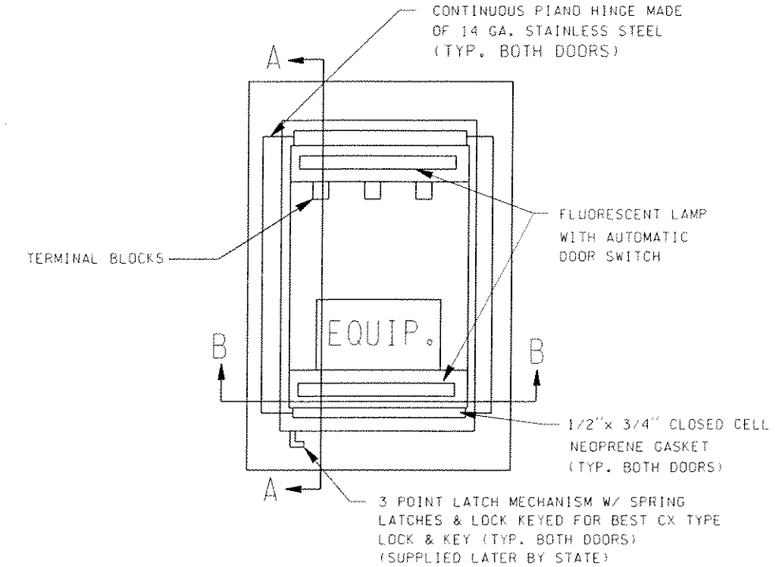

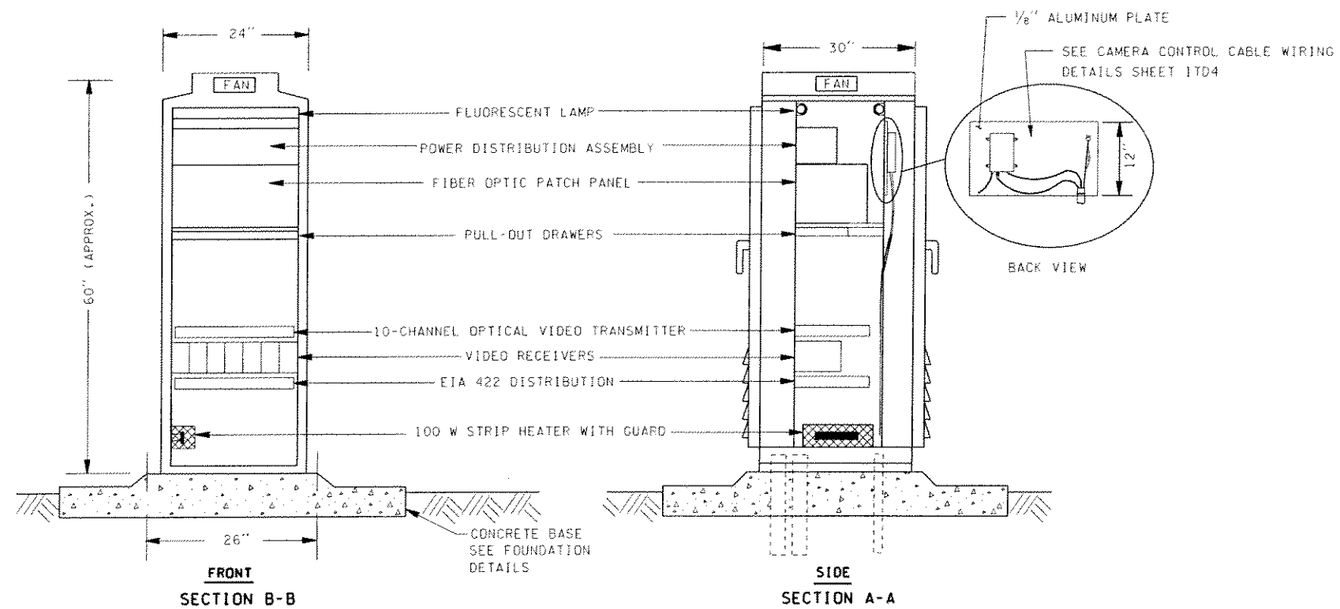

NOT TO SCALE

CAMERA CABINET DETAIL/MINI HUB

FILE NAME	C:\AAWork\Kirkland NickelStage 1- ITS Master Details\Camera.dgn						
TIME	01:29:29 PM						
DATE	09/13/2004						
DESIGNED BY							
ENTERED BY							
CHECKED BY							
PROJ. ENGR.							
REGIONAL ADM.		REVISION	DATE	BY			

REGION NO.	STATE	FED.AID PROJ.NO.
10	WASH	
JOB NUMBER		
CONTRACT NO.		LOCATION NO.

P.E. STAMP BOX DATE

P.E. STAMP BOX DATE

Washington State Department of Transportation

PLOT16

SHEET OF SHEETS

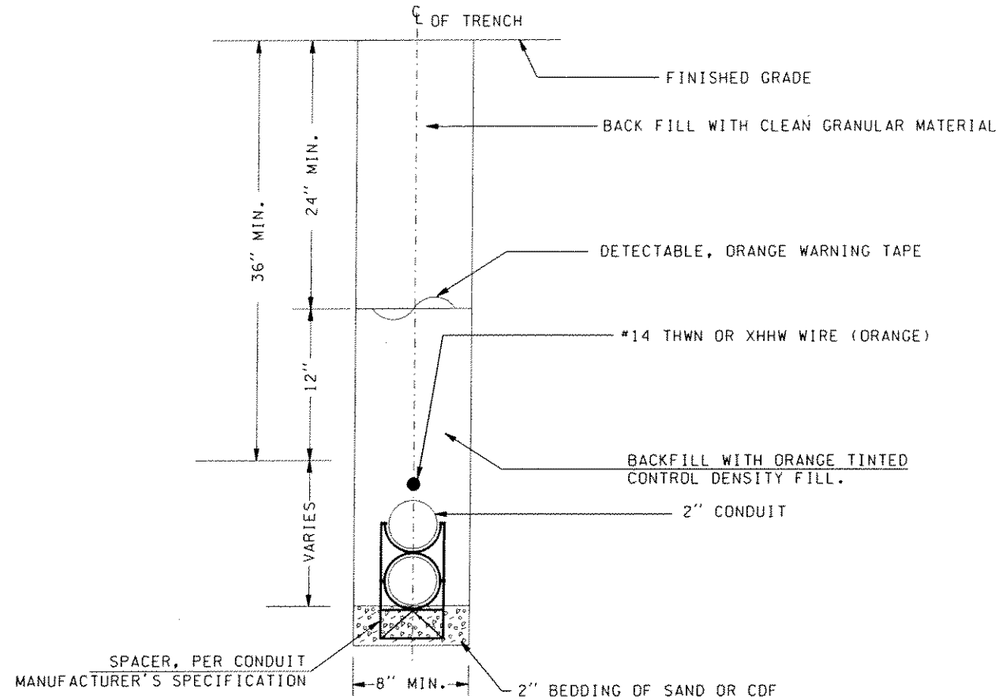

NOTES:

1. UNLESS OTHERWISE SPECIFIED, LINEAR DIMENSIONS ARE BASED ON ROADWAY STATIONING.
2. WARNING TAPE SHALL BE LABELED "WARNING - FIBER OPTIC CABLE BELOW".
3. IF A CONFLICT WITH DRAINAGE, OR OTHER UTILITIES ARISE, THE CONTRACTOR SHALL SUBMIT A PLAN FOR RESOLVING THE CONFLICT TO THE ENGINEER.
4. INSTALL CONDUIT SPACER PER MANUFACTURER'S RECOMMENDATION.

MAINLINE TRENCH DETAIL
FOR 2-2" CONDUIT

NOT TO SCALE

FILE NAME	C:\AAWork\Kirkland NickelStage I- ITS Master Details\Conduit.dgn								PLOTS
TIME	03:28:55 PM				REGION NO. 10	STATE WASH	FED.AID PROJ.NO.	Washington State Department of Transportation	
DATE	09/13/2004				JOB NUMBER				SHEET OF SHEETS
DESIGNED BY									
ENTERED BY									
CHECKED BY					CONTRACT NO.	LOCATION NO.	P.E. STAMP BOX DATE	P.E. STAMP BOX DATE	
PROJ. ENGR.									
REGIONAL ADM.		REVISION	DATE	BY					

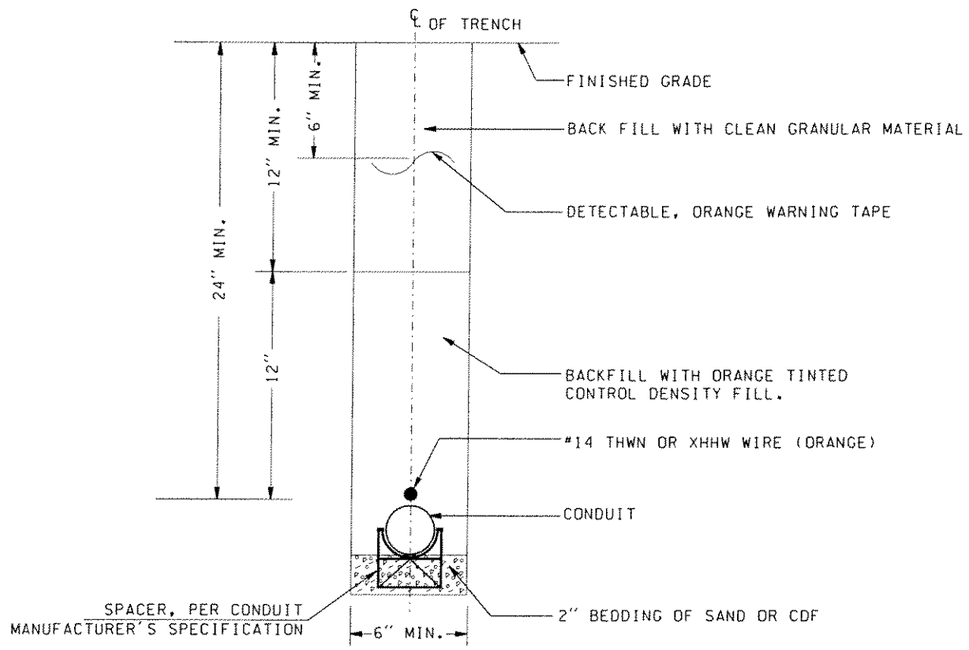

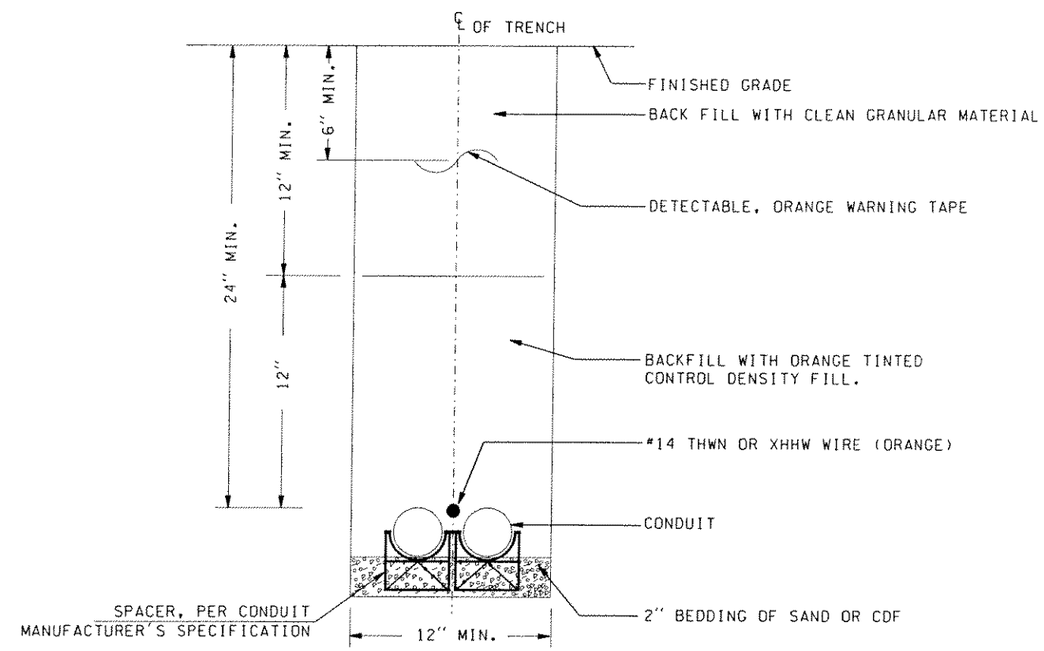

NOTES:

1. UNLESS OTHERWISE SPECIFIED, LINEAR DIMENSIONS ARE BASED ON ROADWAY STATIONING.
2. WARNING TAPE SHALL BE LABELED "WARNING - FIBER OPTIC CABLE BELOW".
3. IF A CONFLICT WITH DRAINAGE, OR OTHER UTILITIES ARISE, THE CONTRACTOR SHALL SUBMIT A PLAN FOR RESOLVING THE CONFLICT TO THE ENGINEER.
4. INSTALL CONDUIT SPACER PER MANUFACTURER'S RECOMMENDATION.

NOT TO SCALE

MAINLINE TRENCH DETAIL

FILE NAME	C:\AAWork\Kirkland NickelStage I- ITS Master Details\Conduit.dgn						PLOT6
TIME	03:28:58 PM			REGION NO. / STATE	FED.AID PROJ.NO.	Washington State Department of Transportation	
DATE	09/13/2004			10 / WASH			
DESIGNED BY				JOB NUMBER			SHEET
ENTERED BY							OF
CHECKED BY				CONTRACT NO.	LOCATION NO.		SHEETS
PROJ. ENGR.							
REGIONAL ADM.	REVISION	DATE	BY				

P.E. STAMP BOX DATE

P.E. STAMP BOX DATE

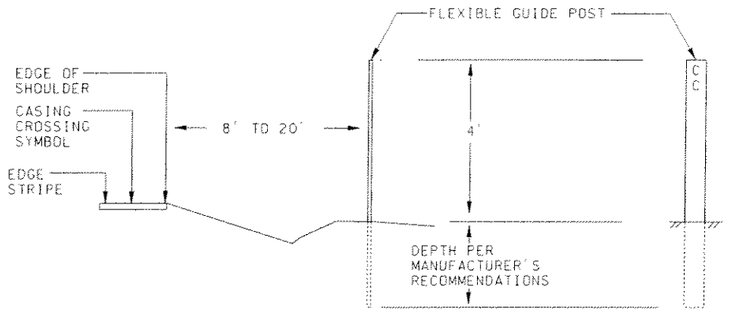

FLEXIBLE PLASTIC GUIDE POST DETAIL

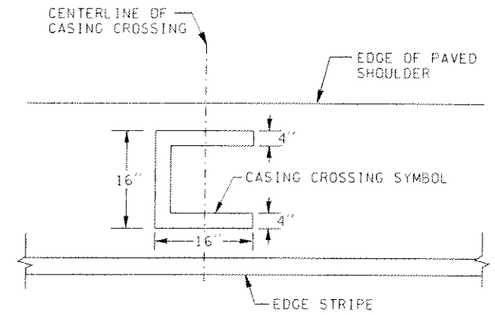

CASING CROSSING SYMBOL DETAIL

CASING CROSSING MARKER DETAIL

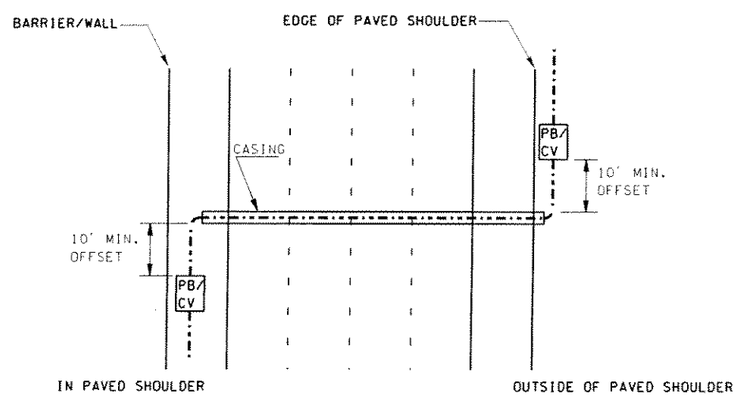

TYPICAL CASING AND CABLE VAULT/ PULL BOX DETAIL

PLOT2 C:\AQWORK\2004 Land Nickel Stage 1 - ITS Master Details\Conduit.dgn

strands

DESIGNED BY					REGION NO.	STATE	FED.AID PROJ.NO.	ENVIRONMENTAL AND ENGINEERING SERVICE CENTER	Washington State Department of Transportation	ITS MASTER DETAILS ENGLISH	CAS
ENTERED BY					10	WASH					
CHECKED BY					JOB NUMBER						SHEET 5.1E OF SHEETS
PROJ. ENGR.											
REGIONAL ADM.					CONTRACT NO.					CASING DETAILS	
	DATE	DATE	REVISION	BY							

PLOT3 C:\AGW0T8X2.DGN and Nickel Stage 1 - ITS Master Details\Conduit.dgn
strands

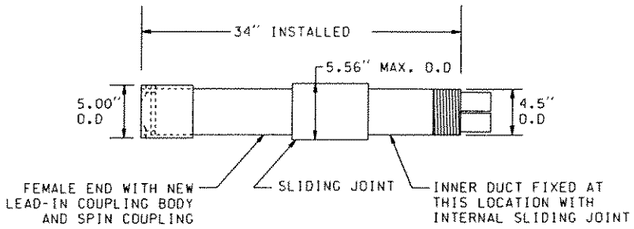

STEEL EXPANSION FITTING

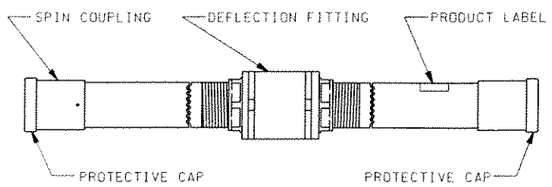

DEFLECTION FITTING

NOTES:
1. LAY THE LENGTH =56"
2. DEFLECTION JOINT CAN DEFLECT ¾" MAX. IN ALL AXIS.
3. DEFLECTION JOINT CAN BEND UP TO 30°.

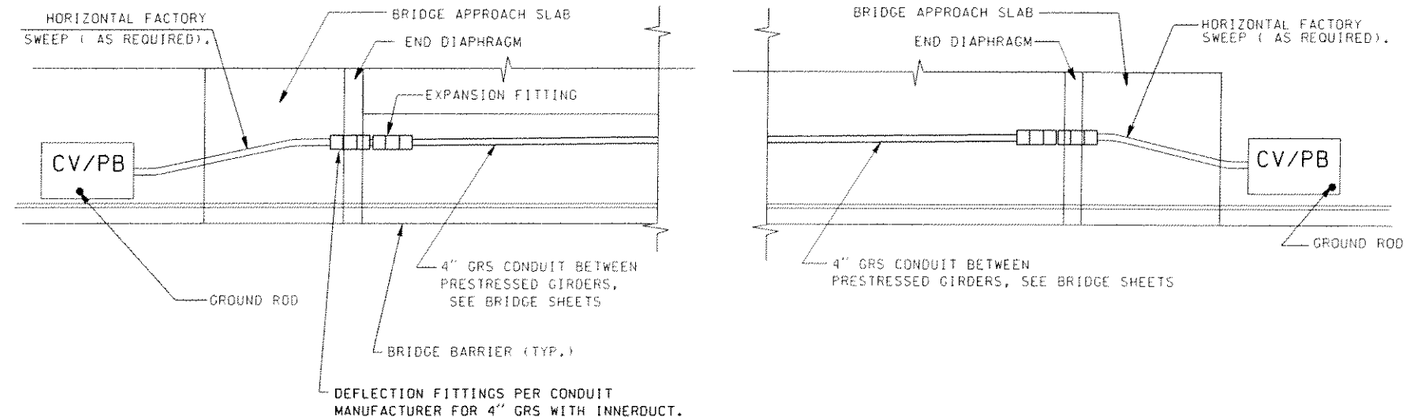

PLAN VIEW

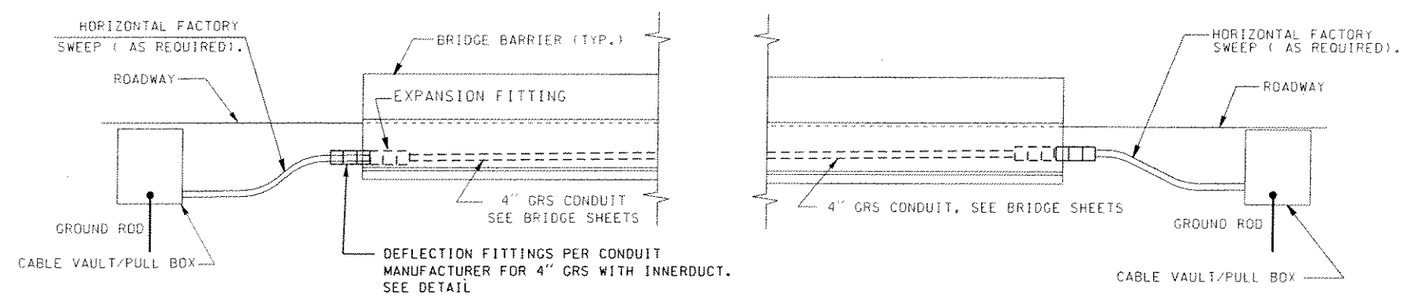

ELEVATION VIEW

NOTE:
INSTALL EXPANSION FITTING AT EVERY BRIDGE EXPANSION JOINT EACH END OF BRIDGE AND FOR CONDUITS EXPANSION PER MANUFACTURER RECOMMENDATION (SEE DETAIL) SEE BRIDGE DETAIL SHEET.

TYPICAL CONDUIT PLACEMENT ON BRIDGE ENDS

					REGION NO.	STATE	FED.AID PROJ.NO.	ENVIRONMENTAL AND ENGINEERING SERVICE CENTER	Washington State Department of Transportation	ITS MASTER DETAILS ENGLISH	BRG1
DESIGNED BY					10	WASH					
ENTERED BY					JOB NUMBER						SHEET 5.2E OF SHEETS
CHECKED BY											
PROJ. ENGR.											
REGIONAL ADM.					CONTRACT NO.					CONDUIT PLACEMENT ON BRIDGE ENDS	
	DATE	DATE	REVISION	BY							

PLOT4 C:\AAWork\Kirkland Nickel Stage 1 - ITS Master Details\Conduit.dgn
09/13/2004
strands

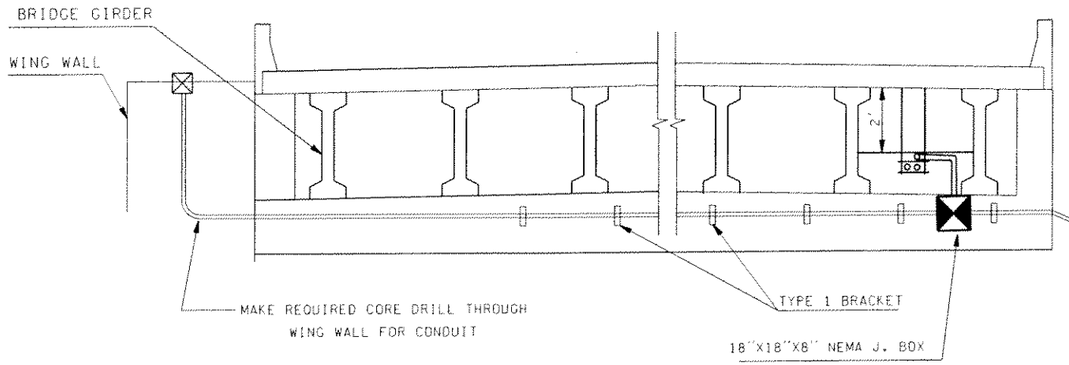

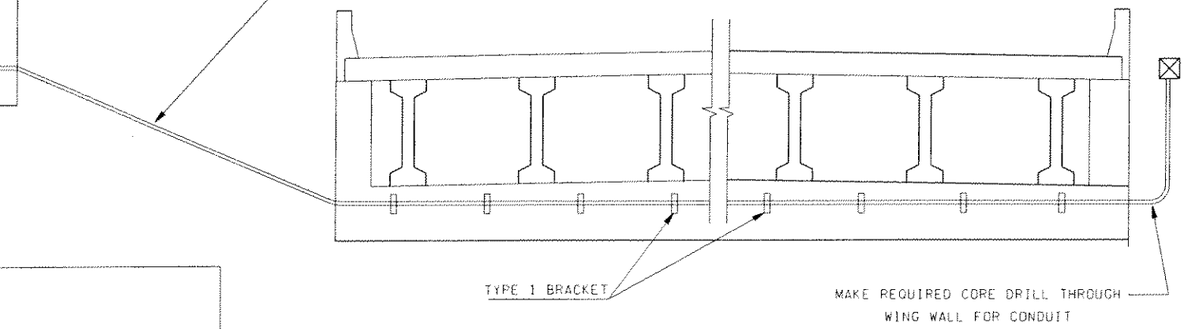

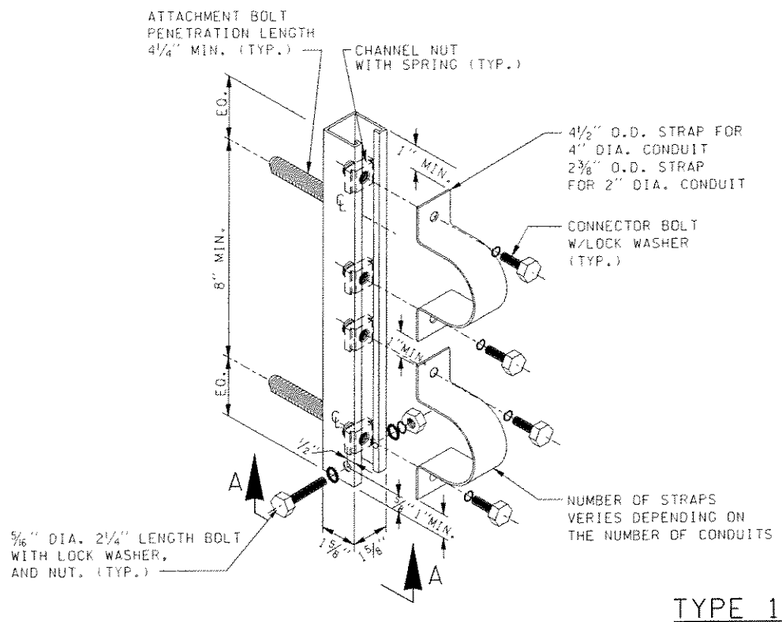

TYPE 1 BRACKET DETAIL

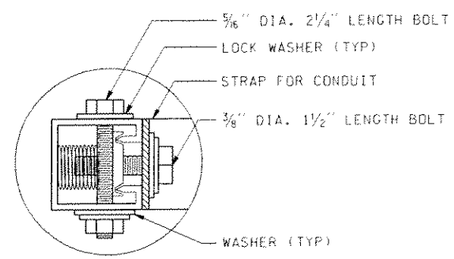

DETAIL A

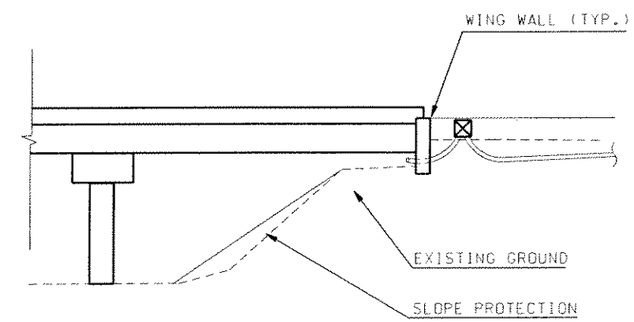

STRUCTURE MOUNTED CONDUIT

NOTES

MOUNTING HARDWARE DETAILS ARE PROVIDED FOR ILLUSTRATIVE PURPOSES ONLY. THE CONTRACTOR MAY PROPOSE GEOMETRIC ATTACHMENT MODIFICATIONS, SUBJECT TO APPROVAL BY THE ENGINEER.

DRILLING THROUGH REINFORCING STEEL IS NOT ALLOWED. IF STEEL IS HIT WHILE DRILLING, THE LOCATION SHALL BE MOVED AND THE ABANDONED HOLE FILLED WITH GROUT CONFORMING TO SECTION 6-02.3(20). THERE SHALL BE A MINIMUM 3" EDGE DISTANCE TO THE CENTERLINE OF ANCHOR HOLES IN CONCRETE. MOUNT THE UNISTRUT USING AN APPROVED RESIN BONDED ANCHOR SYSTEM, INSTALLED PER MANUFACTURERS RECOMMENDATION IN DRY CONDITIONS. RESIN BONDED ANCHORS SHALL BE STAINLESS STEEL AND SHALL BE A MINIMUM OF ½" DIA. (EXPANSION ANCHORS ARE NOT ALLOWED.)

RIGID METAL CONDUIT
TRADE SIZE (NEC)
1"
1¼"
1½"
2"
2½"
3"
3½"

NOT TO SCALE

					REGION NO.	STATE	FED.AID PROJ.NO.
DESIGNED BY					10	WASH	
ENTERED BY					JOB NUMBER		
CHECKED BY							
PROJ. ENGR.					CONTRACT NO.		
REGIONAL ADM.							
	DATE	DATE	REVISION	BY			

ENVIRONMENTAL AND ENGINEERING SERVICE CENTER

Washington State Department of Transportation

ITS MASTER DETAILS ENGLISH

STRUCTURE MOUNTED CONDUIT

BRG2

SHEET 5.3E OF SHEETS

PLOT1 C:\0AWBK2B04kland Nickel Stage 1 - ITS Master Details English.dgn

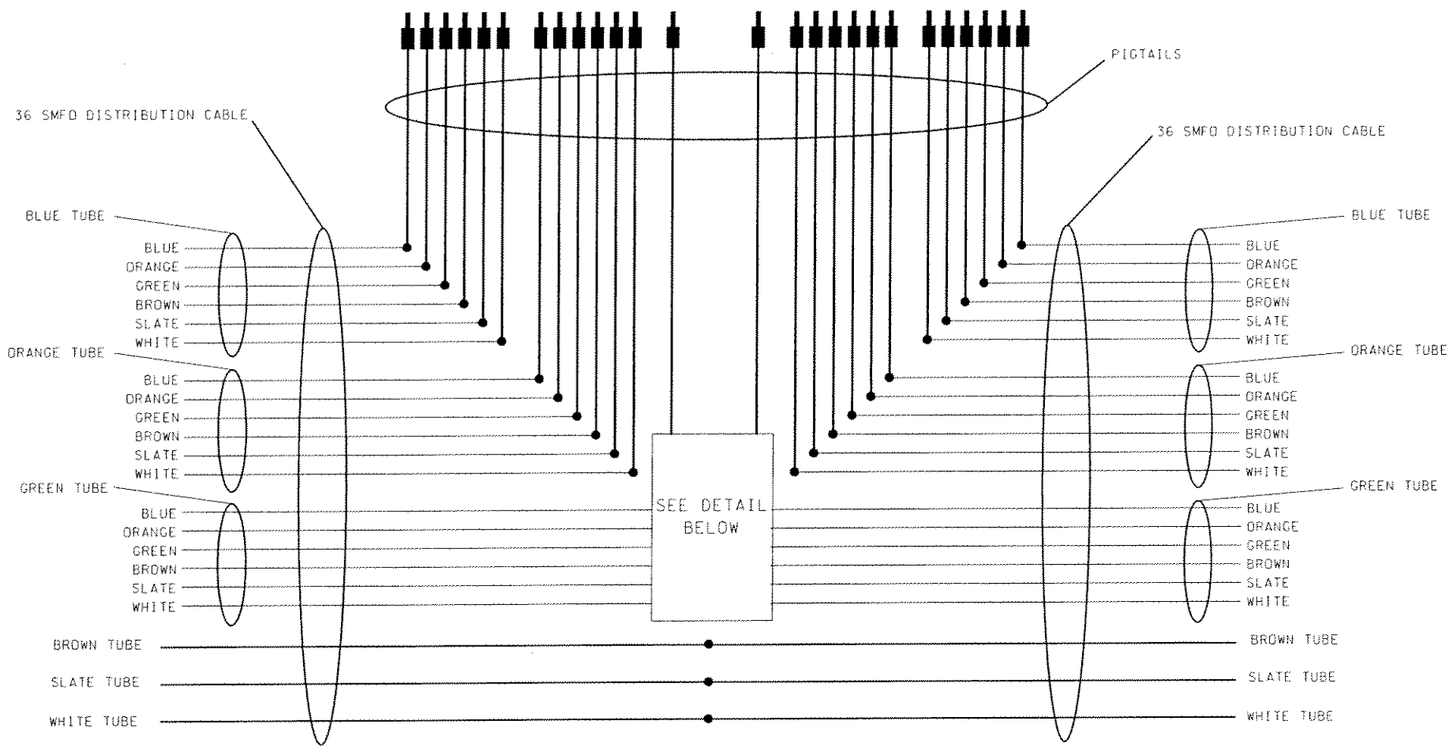

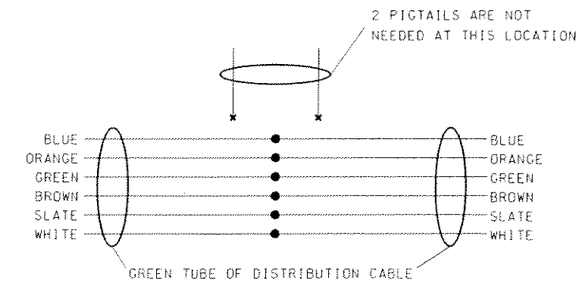

ES-946

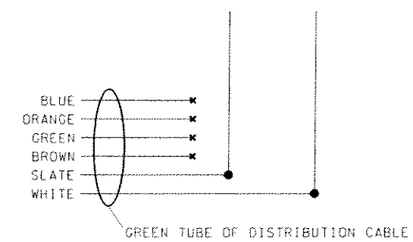

WSTA-954

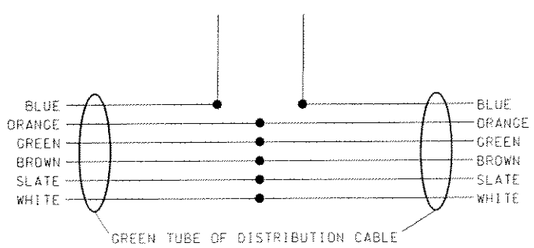

CC-947

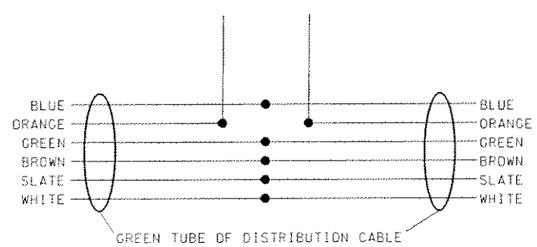

CC-949

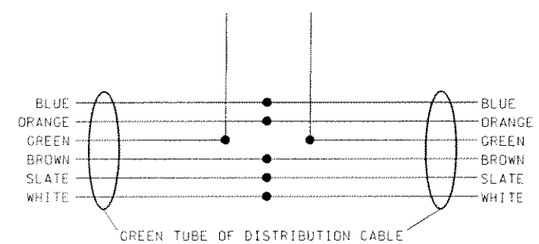

CC-950

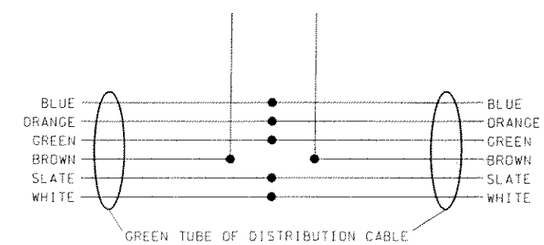

CC-952

PATCH PANEL SPLICE DETAILS

DESIGNED BY				
ENTERED BY				
CHECKED BY				
PROJ. ENGR.				
REGIONAL ADM.		6/1/00		
	DATE	DATE	REVISION	BY

REGION NO.	STATE	FED.AID PROJ.NO.
10	WASH	
JOB NUMBER		
CONTRACT NO.		

ENVIRONMENTAL AND ENGINEERING SERVICE CENTER

Washington State Department of Transportation

ITS MASTER DETAILS ENGLISH

FIBER OPTIC SPLICE DETAILS

F01

SHEET 11.0E OF SHEETS

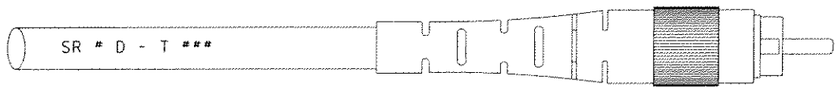

SR # ROADWAY THE CABLE IS ROUTED FROM THE PATCH PANEL
D DIRECTION THE CABLE IS ROUTED FROM THE PATCH PANEL
N = NORTH
S = SOUTH
T TYPE OF CABLE
M = MAINLINE
D = DISTRIBUTION
CABLE NUMBER OF THE MAINLINE OR DISTRIBUTION FIBER PER EIA-359-A-1

LABELING FOR MAINLINE AND DISTRIBUTION FIBER CABLES

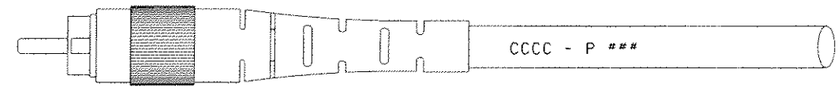

CCCC CONTRACT NUMBER
P LETTER P FOR PATCH CORD
SEQUENTIAL NUMBER BEGINNING FROM 001

LABEL BOTH ENDS OF THE PATCH PANEL CORD.

PATCH CORD LABEL

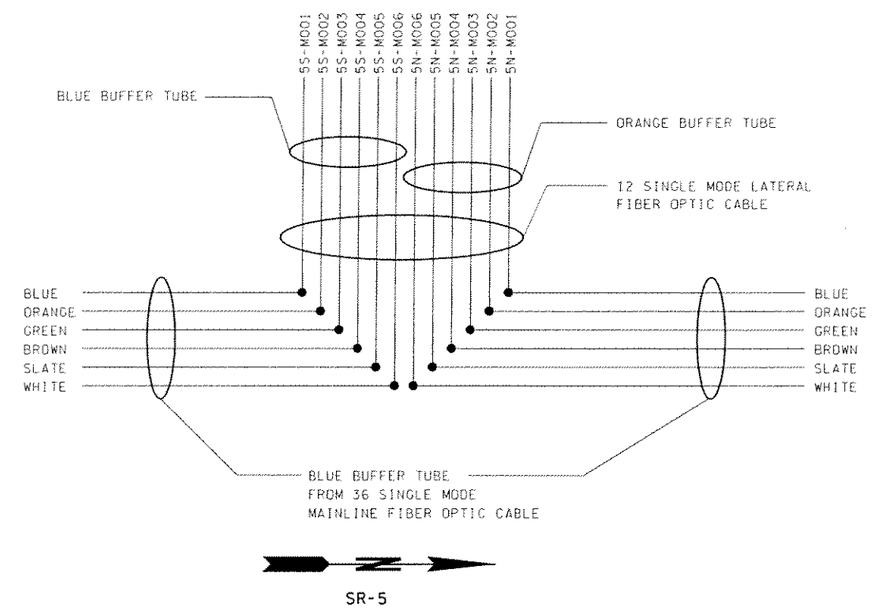

EXAMPLE OF DISTRIBUTION CABLE LABEL IN A CABINET

CABLE LABEL DETAIL

DESIGNED BY					REGION NO.	STATE	FED.AID PROJ.NO.	ENVIRONMENTAL AND ENGINEERING SERVICE CENTER	Washington State Department of Transportation	MASTER DETAILS	F02
ENTERED BY					10	WASH					
CHECKED BY					JOB NUMBER						SHEET 11.1E OF SHEETS
PROJ. ENGR.										FIBER OPTIC LABEL DETAILS	
REGIONAL ADM.					CONTRACT NO.						
	DATE	DATE	REVISION	BY							

PLOT2 C:\AWBDK2004\Kirkland Nickel Stage 1 - ITS Master Details\Fibers.dgn

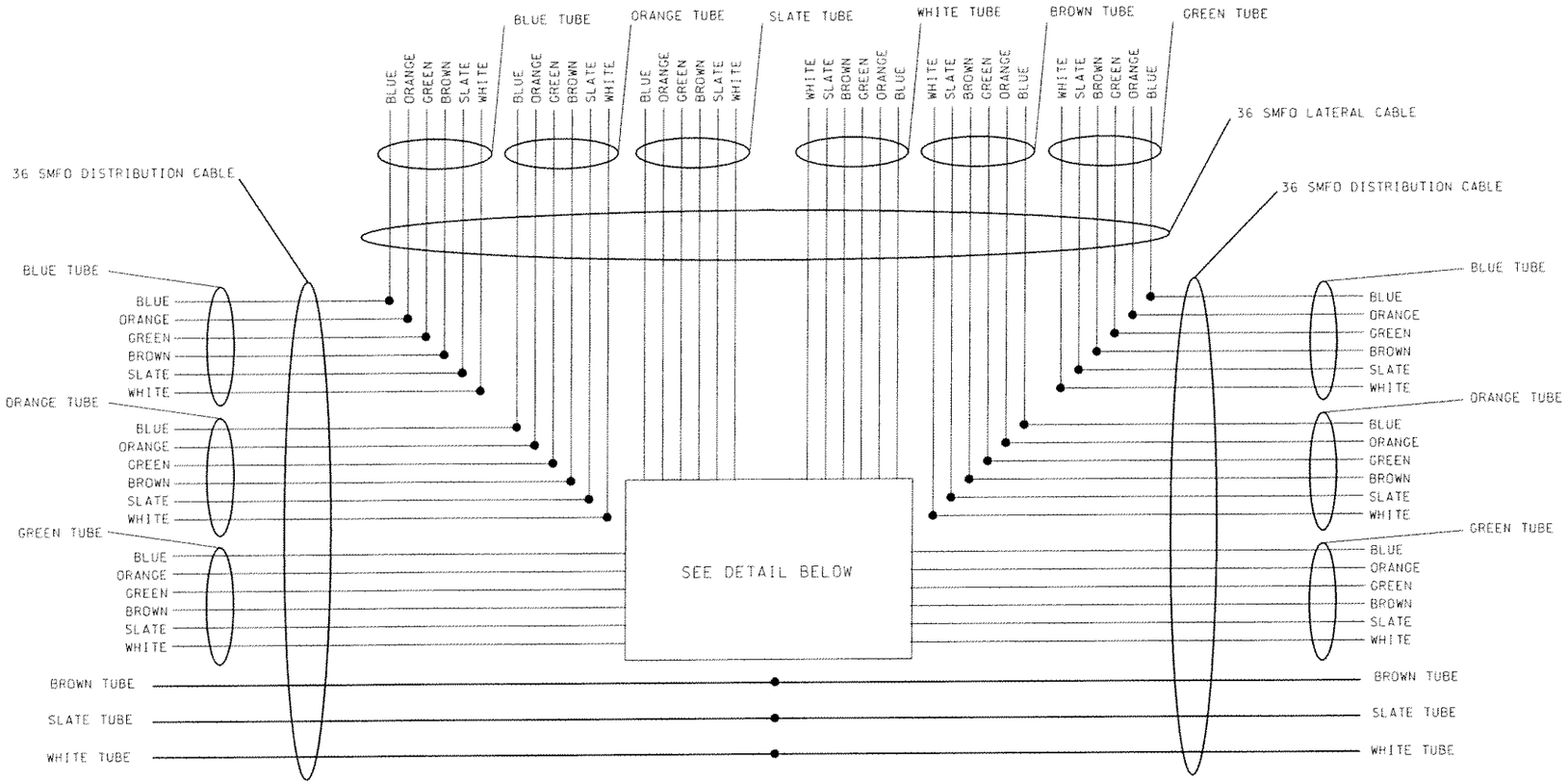

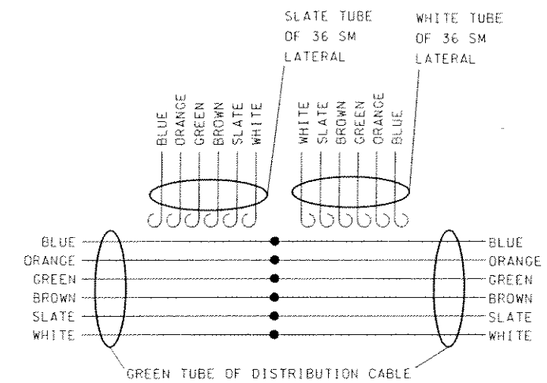

ES-946

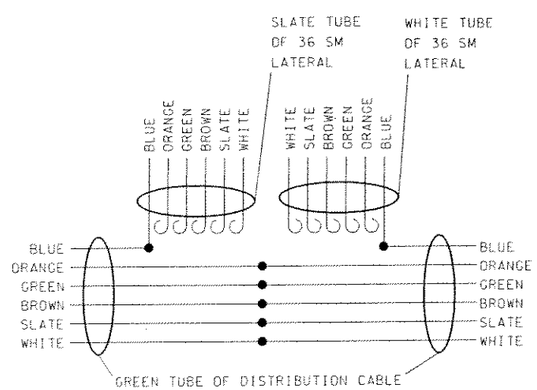

CC-947

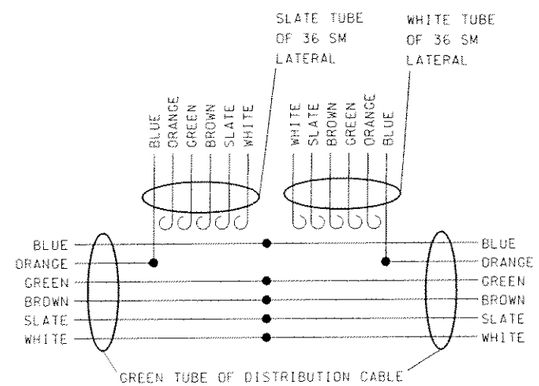

CC-949

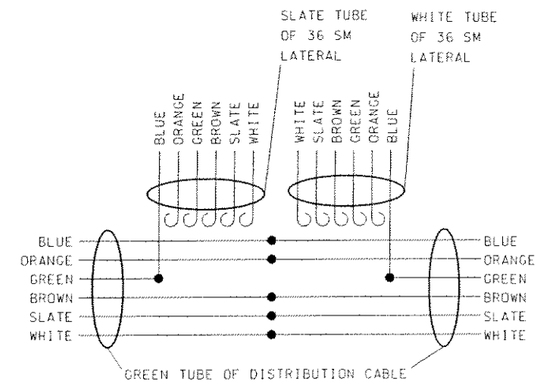

CC-950

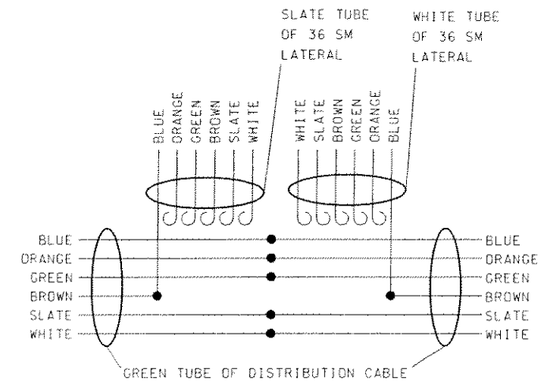

CC-952

VAULT SPLICE DETAILS

DESIGNED BY				
ENTERED BY				
CHECKED BY				
PROJ. ENGR.				
REGIONAL ADM.		6/1/00		
	DATE	DATE	REVISION	BY

REGION NO.	STATE	FED.AID PROJ.NO.
10	WASH	
JOB NUMBER		
CONTRACT NO.		

ENVIRONMENTAL AND ENGINEERING SERVICE CENTER

Washington State Department of Transportation

MASTER DETAILS

FIBER OPTIC SPLICE DETAILS

F03

SHEET 11.2E OF SHEETS

PLOT3 C:\09WD3K2804\Kland Nickel Stage 1 - ITS Master Details\Fibers.dgn

CONSTRUCTION NOTES

1. INSTALL TYPE R1 ROUND INDUCTION LOOP VEHICLE DETECTOR PER ITS DETAILS AND SPECIAL PROVISIONS.

2. INSTALL COLOR CAMERA, PAN AND TILT UNIT, POLE AND FOUNDATION, JUNCTION BOXES AND ASSOCIATED EQUIPMENT PER SPECIAL PROVISIONS AND ITS DETAILS.

3. INSTALL A CAMERA CONTROLLER CABINET, CAMERA RECEIVER, OPTICAL TRANSMITTER AND ASSOCIATED EQUIPMENT PER SPECIAL PROVISIONS AND ITS DETAILS. MAKE FIBER OPTIC CONNECTION TO OPTELECOM TRANSMITTER USING SINGLEMODE PATCH CORD.

4. INSTALL A MODEL 334 CONTROLLER CABINET AND ASSOCIATED EQUIPMENT PER SPECIAL PROVISIONS AND ITS DETAILS. MAKE FIBER OPTIC CONNECTION TO THE FIBER OPTIC MODEM USING 4 SINGLEMODE PATCH CORDS. MAKE EIA-232 CONNECTION BETWEEN THE DATA PORT OF THE FIBER OPTIC MODEM AND THE C2 PORT OF 170 CONTROLLER.

5. INSTALL 480V / 120V, 5 KVA TRANSFORMER AND CABINET FOR ITS EQUIPMENT ON CONCRETE FOUNDATION. SEE SPECIAL PROVISIONS AND ITS DETAILS.

6. INSTALL MULTIPLE CABINET FOUNDATION, PER SPECIAL PROVISIONS AND ITS DETAILS. INSTALL FOUNDATION OUTSIDE OF CLEAR ZONE AREA PER ENGINEER DIRECTION.

7. COIL 100FT FIBER (CABLE VAULT).

8. SEE ILLUMINATION SHEETS FOR CONTINUATION OF POWER.

9. INSTALL SINGLE CABINET FOUNDATION WITH TRANSFORMER AND INSTALL OUTSIDE CLEARZONE AREA PER ENGINEER DIRECTION AND ITS DETAILS.

10. INSTALL CONDUIT UNDER ROADWAY. THE CONDUIT SHALL BE INSTALLED UNDER EXISTING PAVEMENT USING APPROVED DIRECTIONAL BORING METHOD. SEE ITS SPECIAL PROVISIONS.

11. INSTALL TYPE WR ROUND INDUCTION LOOP VEHICLE DETECTOR PER ITS DETAILS AND SPECIAL PROVISIONS.

    INSTALL FIBER OPTIC TERMINAL CABINET PER SPECIAL PROVISIONS. CABINET SHALL BE THE SAME DIMENSIONS AS CAMERA CONTROL CABINET. SEE ITS DETAIL.

    TERMINATE SINGLE MODE FIBER OPTIC CABLE IN THE PATCH PANEL USING FUSION SPLICED PIGTAILS, PER SPECIAL PROVISIONS.

    INSTALL RM SIGNAL STANDARD, MODIFIED WITH A SLIP BASE, FOUNDATION AND TWO VEHICLE SIGNAL HEADS PER SPECIAL PROVISIONS AND ITS DETAILS AND STD. PLAN J-7a. FOR SIGN, SEE SIGNING SHEETS.

    TERMINATE SINGLE MODE FIBER OPTIC CABLE IN THE PATCH PANEL USING FUSION SPLICED PIGTAILS, PER SPECIAL PROVISIONS AND ITS DETAILS.

ITS Legend

Existing	New	
		Type 1 Junction Box
		Type 2 Junction Box
		Type 3 Junction Box
		Type 4 Junction Box
		Type 5 Junction Box
		Type 6 Junction Box
		Nema 4X Junction Box
CV	CV	ITS Cable Vault
PB	PB	ITS Pull Box
T	T	Transformer Cabinet
		CCTV Controller Cabinet
		Controller Cabinet
TC	TC	Terminal Cabinet
CH	CH	Comunication HUB
		R1 Induction Loop
		WR Induction Loop
		CCTV Camera
		Conduit
		HAR Controller Cabinet
HAR	HAR	HAR Sign
		HAR Transmitter
		Advance Warning Sign
		Ramp Meter Signal Head Type 1
		Ramp Meter Signal Head Type 2
		Electrical Service Cabinet
		Overhead VMS
VMS	VMS	Shoulder Mounted VMS
		VMS Controller Cabinet

FILE NAME	C:\AAWork\Kirkland NickelStage I- ITS Master Details\ITS Note Sheets.dgn						PLOT1
TIME	07:44:05 AM			REGION NO. 10	STATE WASH	FED.AID PROJ.NO.	
DATE	09/14/2004						
DESIGNED BY				JOB NUMBER			
ENTERED BY							SHEET
CHECKED BY				CONTRACT NO.		LOCATION NO.	OF
PROJ. ENGR.							SHEETS
REGIONAL ADM.		REVISION	DATE	BY			

P.E. STAMP BOX DATE

P.E. STAMP BOX DATE

Washington State Department of Transportation

△ WIRE NOTES

RUN NO.	EXISTING CONDUIT	NEW CONDUIT	INNERDUCT	EXISTING CONDUCTOR	NEW CONDUCTOR	REMARK
RUN	CONDUIT	CONDUIT		CONDUCTOR	CONDUCTOR	REMARK

RUN NO.	EXISTING CONDUIT	NEW CONDUIT	INNERDUCT	EXISTING CONDUCTOR	NEW CONDUCTOR	REMARK
RUN	CONDUIT	CONDUIT		CONDUCTOR	CONDUCTOR	REMARK

NOTES: ALL 120V POWER RUN CONDUCTOR ARE ONE BLACK AND ON WHITE.

FILE NAME	C:\AAWork\Kirkland Nickel Stage I- ITS Master Details\ITS Note Sheets.dgn								PLOT2
TIME	07:44:08 AM			REGION NO.	STATE	FED.AID PROJ.NO.		Washington State Department of Transportation	
DATE	09/14/2004			10	WASH				
DESIGNED BY				JOB NUMBER					SHEET
ENTERED BY									OF
CHECKED BY				CONTRACT NO.		LOCATION NO.			SHEETS
PROJ. ENGR.									
REGIONAL ADM.		REVISION	DATE	BY			P.E. STAMP BOX DATE	P.E. STAMP BOX DATE	

PLOT1 C:\0WKB4K2\0Oakland Nickel Stage 1 - ITS Master Details English.dgn

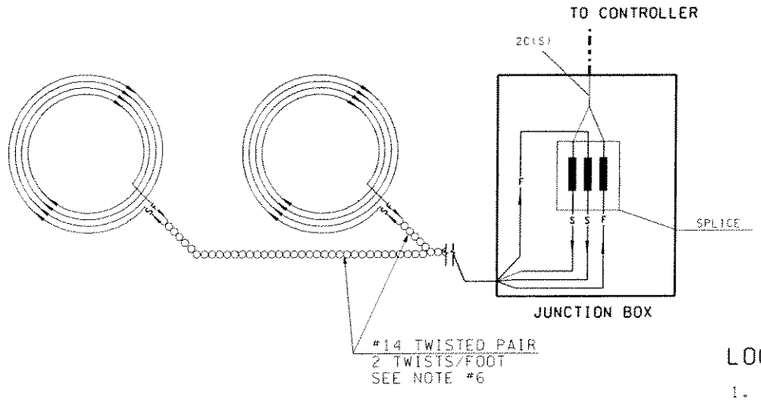

TYPE R2 AND MODIFIED TYPE WR INDUCTION LOOPS

LOOP WINDING DETAIL

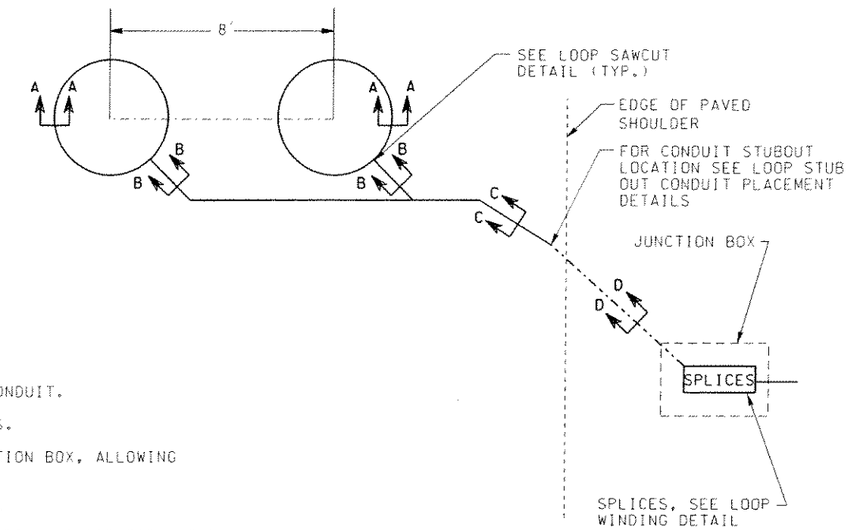

TYPE R2 INDUCTION LOOP

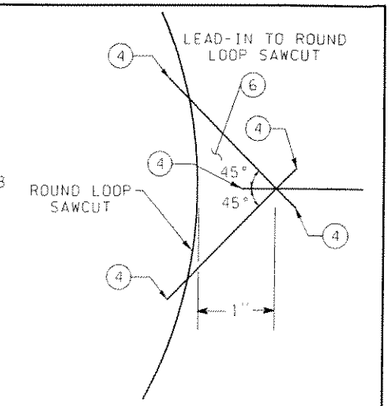

LOOP SAWCUT DETAIL

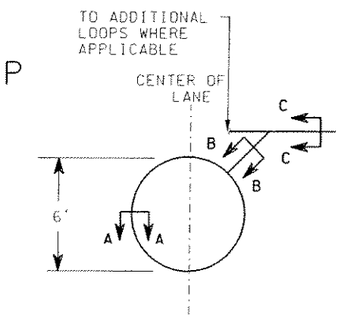

TYPE R1 INDUCTION LOOP

LOOP INSTALLATION NOTES

1. INSTALL JUNCTION BOX AND LEAD-IN CONDUIT.
2. SAWCUT LOOP SLOTS AND LEAD-IN SLOTS.
3. LAY OUT LOOP WIRE STARTING AT JUNCTION BOX, ALLOWING 5' MINIMUM SLACK.
4. INSTALL WIRE IN LOOP SLOT AS SHOWN.
5. FINISH LAYING OUT WIRE AT JUNCTION BOX AND IDENTIFY LEADS WITH LOOP NUMBER AND "S" FOR START AND "F" FOR FINISH.
6. TWIST EACH PAIR OF LEAD WIRES TWO TIMES PER FOOT FROM LOOP TO JUNCTION BOX. REVERSE DIRECTION OF TWIST FOR EACH SUCCESIVE PAIR INSTALLED.
7. CONSTRUCT SUPPLEMENTAL SPLICE CONTAINING ANY SERIES OR PARALLEL LOOP CONNECTIONS REQUIRED IN PLANS. SUPPLEMENTAL SPLICES ARE SUBJECT TO THE SAME REQUIREMENTS SHOWN FOR THE LOOP LEAD AND SHEILDED CABLE SPLICE.
8. SPLICE LOOP LEADS OR SUPPLEMENTAL SPLICE LEADS TO NEW OR EXISTING SHIELDED CABLE.
9. COMPLETE INSTALLATION AND TEST LOOP CIRCUITS OR COMBINATION LOOP CIRCUITS. SEE STANDARD SPECIFICATION 8-20.3(14)D.
10. SEAL ENDS OF CONDUIT WITH ELECTRICAL PUTTY OR SILICONE.
11. CONDUIT FOR LOOP STUBOUT SHALL BE SCHEDULE 40 PVC.
12. IMSA WIRE END SHALL BE SEALED PRIOR TO USE OF RUBBER TAPE OR DUCT SEAL.

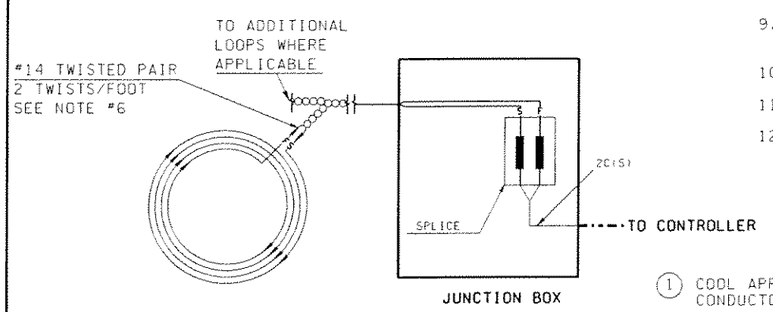

TYPE R1 AND TYPE WR INDUCTION LOOPS

LOOP WINDING DETAILS

1. COOL APPLICATION SEALANT TO ENCAPSULATE CONDUCTORS. SEE SPECIAL PROVISIONS.
2. LOOP WIRE - #14 AWG.
3. LEAD-IN WIRES: (SEE INSTALLATION NOTES) THREE PAIR MAXIMUM PER SAWCUT.
4. EXTEND SAWCUT SUFFICIENT LENGTH TO PROVIDE FULL SAWCUT DEPTH AROUND CORNERS.
5. WEARING COURSE (LOOPS SHALL BE INSTALLED PRIOR TO FINAL LIFT IF NEW PAVEMENT IS INSTALLED) WHERE APPLICABLE.
6. FILL WITH COOL APPLICATION SEALANT.

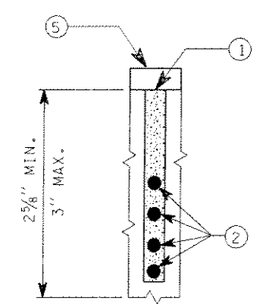

WIDTH OF SAWCUT 1/32" - 1/16" WIDER THAN DIAMETER OF LOOP WIRE

SECTION A-A

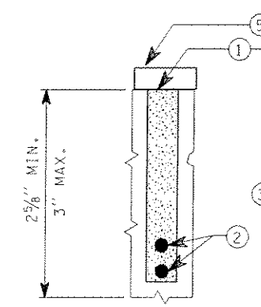

WIDTH OF SAWCUT 1/16" - 1/8" WIDER THAN TWICE THE DIAMETER OF THE LOOP WIRE

SECTION B-B

SEE NOTE 6

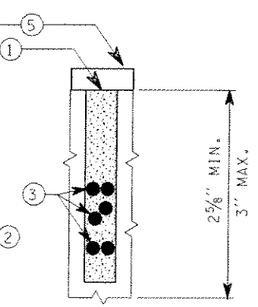

WIDTH OF SAWCUT 1/16" - 1/8" WIDER THAN TWICE THE DIAMETER OF THE LOOP WIRE

SECTION C-C

SEE NOTE 6

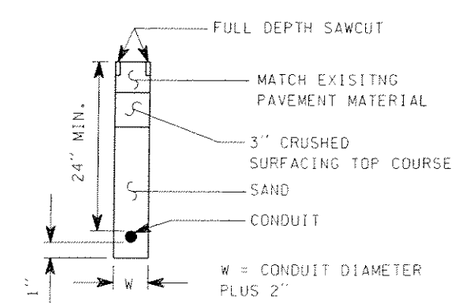

APPLICABLE FOR OFF-ROAD PAVED AREAS ONLY

SECTION D-D

					REGION NO.	STATE	FED.AID PROJ.NO.
DESIGNED BY					10	WASH	
ENTERED BY					JOB NUMBER		
CHECKED BY							
PROJ. ENGR.							
REGIONAL ADM.		5/2/01			CONTRACT NO.		
	DATE	DATE	REVISION	BY			

ENVIRONMENTAL AND ENGINEERING SERVICE CENTER

Washington State Department of Transportation

ITS MASTER DETAILS ENGLISH

INDUCTION LOOP WINDING & SAWCUT

LOOP1

SHEET 10.0E OF SHEETS

PLOT2 C:\DAWDAK2804\Kkland Nickel Stage 1 - ITS Master Details\strmpts.dgn

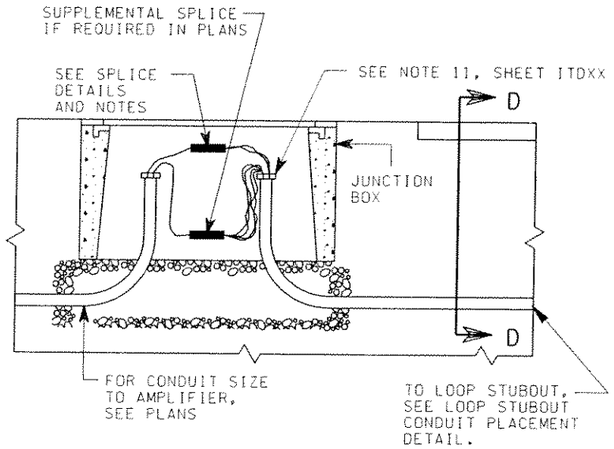

TYPICAL CONDUIT PLACEMENT FOR LOOP LEAD-IN WIRES

LOOP LEAD PAIRS	1-2	3	4-5	6-8	9-12
CONDUIT SIZE (MIN.)	1	1¼	1½	2	2½

TABLE A

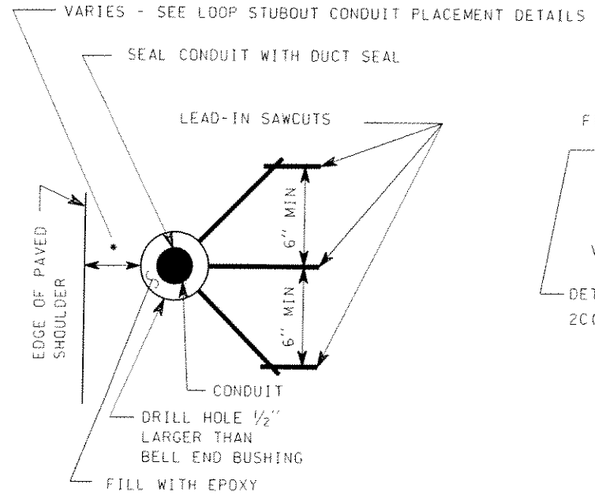

LEAD-IN SAWCUTS AND STUBOUT DETAIL

DETAIL A

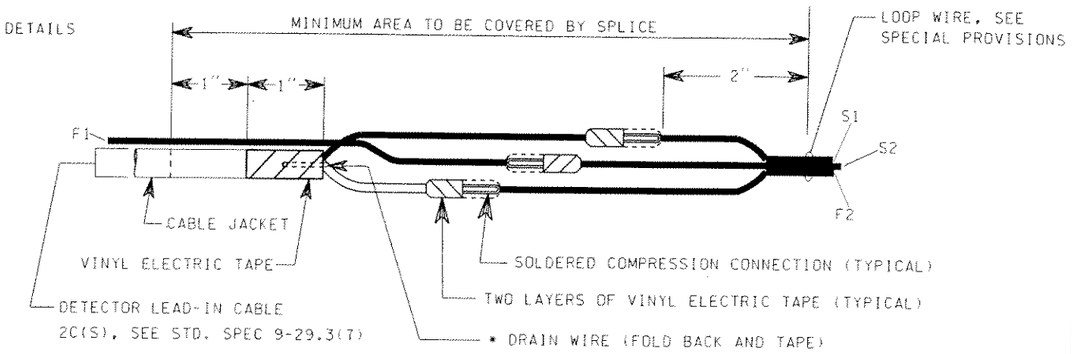

* GROUND DRAIN WIRE AT AMPLIFIER ONLY.
SEE SPECIAL PROVISIONS FOR SPLICE MATERIAL.

SPLICE DETAIL FOR TYPE R2 INDUCTION LOOPS (2 ROUND LOOP CONNECTED IN SERIES)

ALL DIMENSIONS ARE IN INCHES UNLESS OTHERWISE NOTED. SEE SPECIAL PROVISIONS FOR SPLICE REQUIREMENTS.

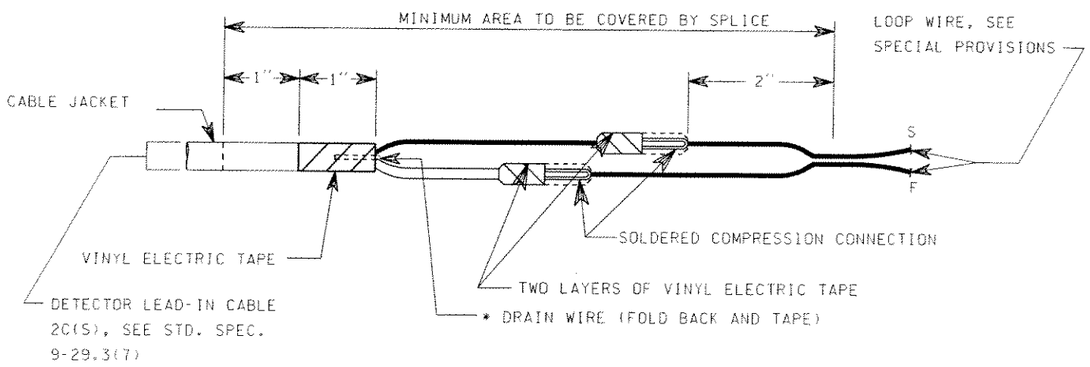

* GROUND DRAIN WIRE AT AMPLIFIER ONLY.
SEE SPECIAL PROVISIONS FOR SPLICE MATERIAL.

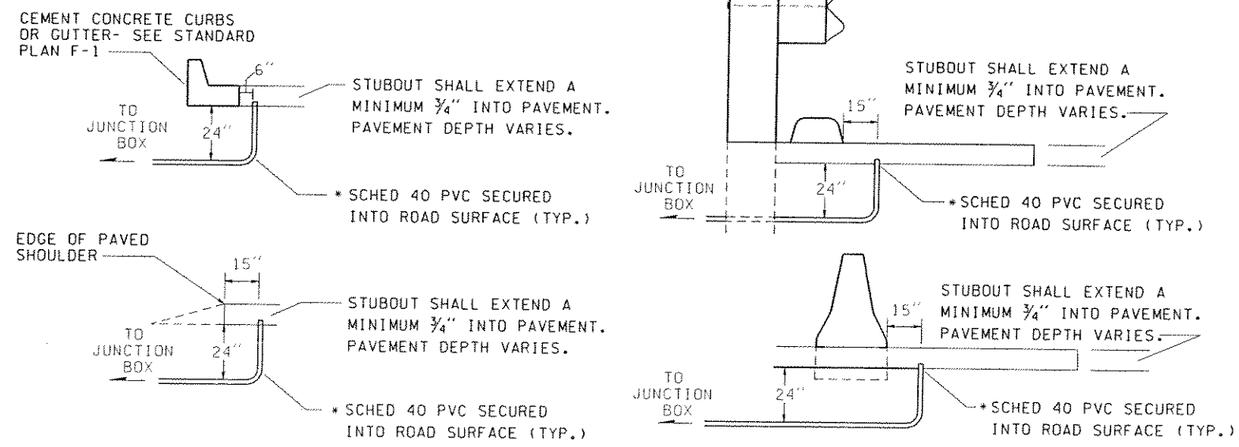

* SEE DETAIL A

LOOP STUBOUT CONDUIT PLACEMENT DETAILS

NOTE: SPLICE KITS SHALL BE CENTERED ON CONDUCTORS AND SUFFICIENT SLACK SHALL BE PROVIDED THAT THE SPLICE CAN BE RAISED A MINIMUM OF 18" ABOVE GROUND LINE.

	DATE	DATE	REVISION	BY
DESIGNED BY				
ENTERED BY				
CHECKED BY				
PROJ. ENGR.				
REGIONAL ADM.		5/2/01		

REGION NO.	STATE	FED.AID PROJ.NO.
10	WASH	

JOB NUMBER

CONTRACT NO.

ENVIRONMENTAL AND ENGINEERING SERVICE CENTER

Washington State Department of Transportation

MASTER DETAILS

INDUCTION LOOP STUB OUT & SPLICE

LOOP2

SHEET 10.1E OF SHEETS

PLOT3 C:\0AWDAK2A0A\Kland Nickel Stage 1 - ITS Master Details\ramp15.dgn

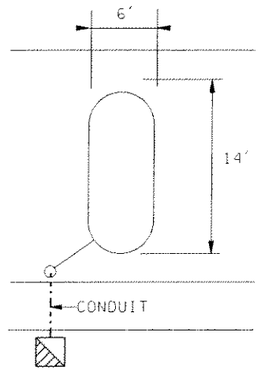

WR INDUCTION LOOP

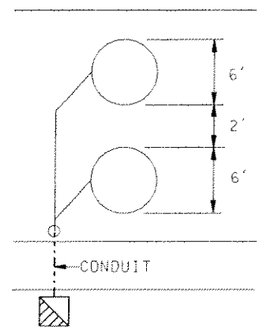

MODIFIED WR INDUCTION LOOP

NOTES:
1. CENTER INDUCTION LOOP VEHICLE DETECTOR BETWEEN LANE LINES.
2. ONE TRAFFIC LANE MUST REMAIN OPEN TO TRAFFIC DURING INSTALLATION OF MAINLINE INDUCTION LOOP VEHICLE DETECTORS.

TYPE WIDE ROUND LOOP DETAILS

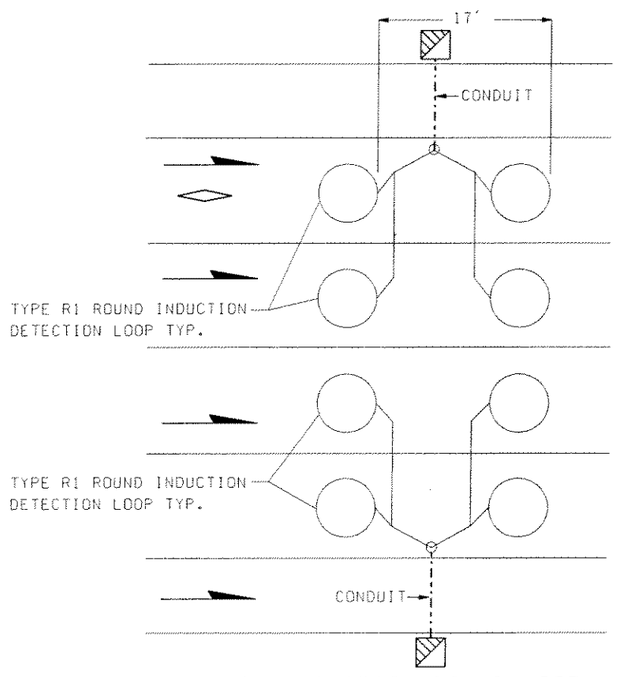

MAIN LINE TYPE R1 INDUCTION ROUND LOOP

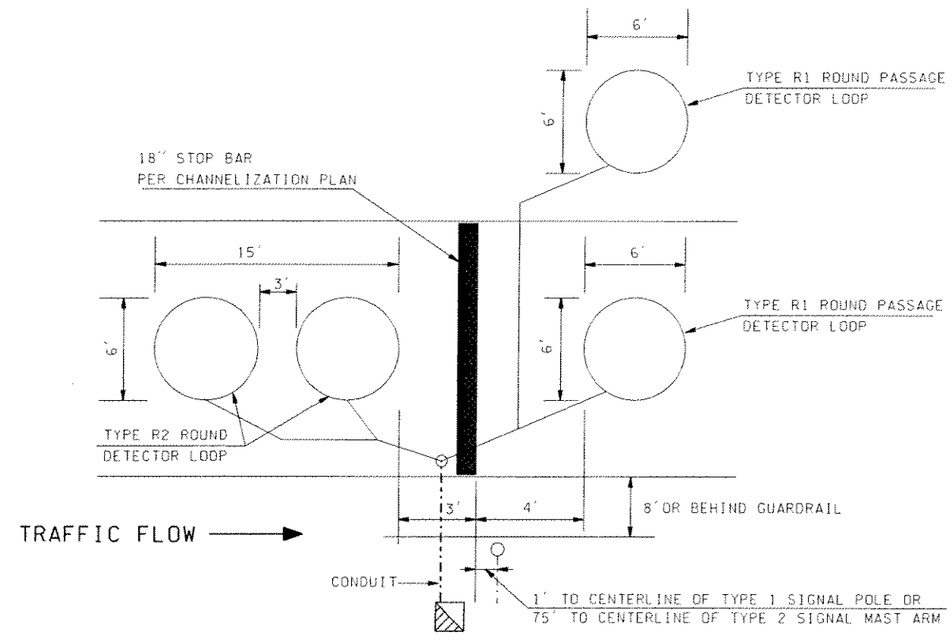

RAMP METERING PASSAGE, DEMAND AND HOV PASSAGE
LOOP LAYOUT DETAIL AT THE STOP BAR

NOT TO SCALE

					REGION NO.	STATE	FED.AID PROJ.NO.	ENVIRONMENTAL AND ENGINEERING SERVICE CENTER	Washington State Department of Transportation	ITS MASTER DETAILS ENGLISH	LOOP3
DESIGNED BY					10	WASH					
ENTERED BY					JOB NUMBER						
CHECKED BY											SHEET 10.2E OF SHEETS
PROJ. ENGR.											
REGIONAL ADM.		4/17/00			CONTRACT NO.					INDUCTION LOOP LAYOUT	
	DATE	DATE	REVISION	BY							

NOTES:
1. CENTER INDUCTION LOOP VEHICLE DETECTOR BETWEEN LANE LINES.
2. ONE TRAFFIC LANE MUST REMAIN OPEN TO TRAFFIC DURING INSTALLATION OF MAINLINE INDUCTION LOOP VEHICLE DETECTORS.

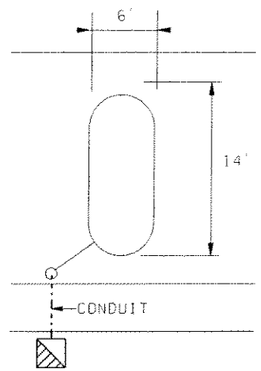

WR INDUCTION LOOP

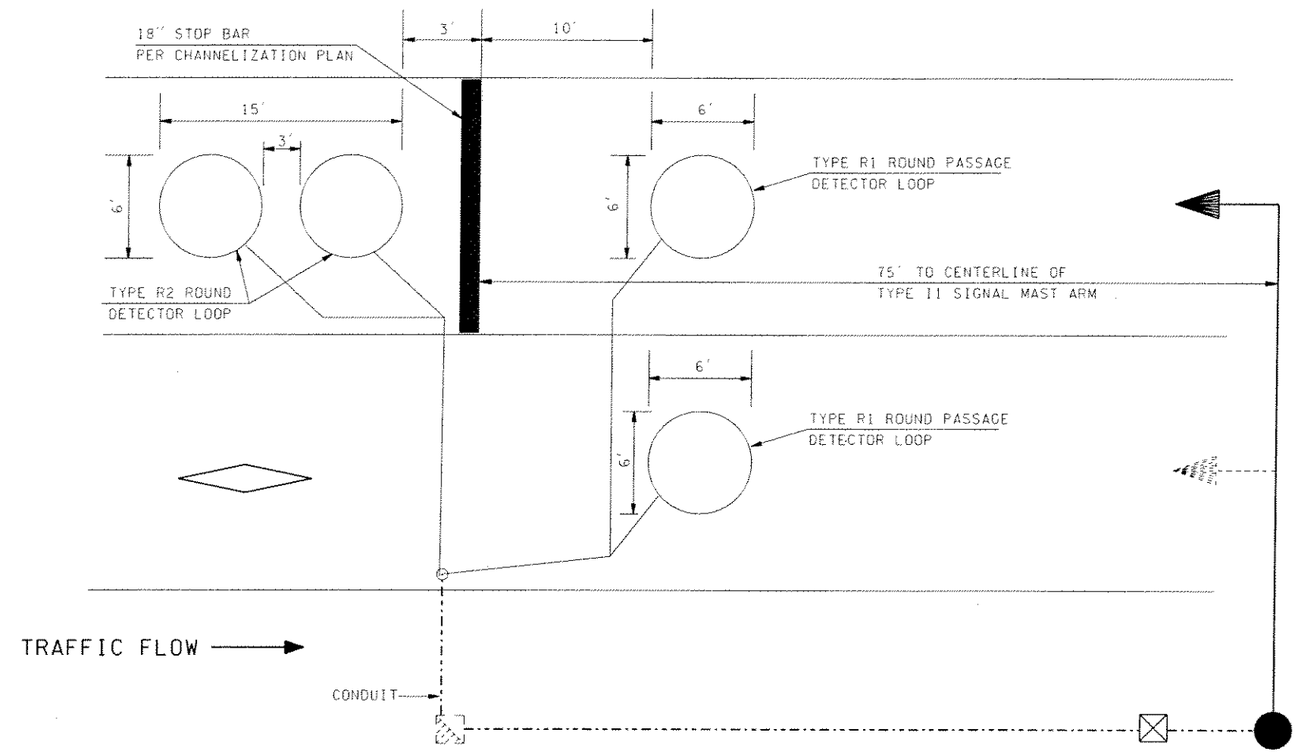

RAMP METERING PASSAGE AND DEMAND
LOOP LAYOUT DETAIL AT THE STOP BAR

NOT TO SCALE

FILE NAME	C:\AAWork\Kirkland NickelStage I- ITS Master Details\Loops.dgn								PLOT4
TIME	08:52:44 AM			REGION NO.	STATE	FED.AID PROJ.NO.			
DATE	09/14/2004			10	WASH				
PLOTTED BY	strands			JOB NUMBER					
DESIGNED BY									
ENTERED BY									
CHECKED BY				CONTRACT NO.		LOCATION NO.			SHEET OF SHEETS
PROJ. ENGR.									
REGIONAL ADM.		REVISION	DATE	BY			P.E. STAMP BOX DATE	P.E. STAMP BOX DATE	

Washington State Department of Transportation

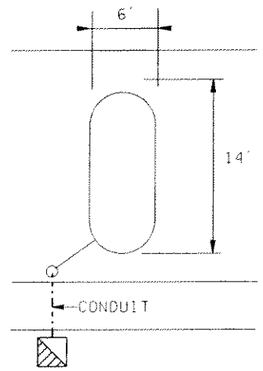

WR INDUCTION LOOP

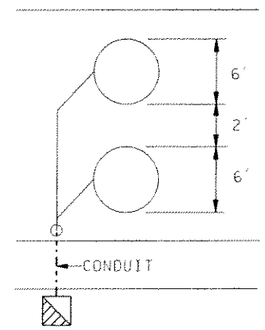

MODIFIED WR INDUCTION LOOP

TYPE WIDE ROUND LOOP DETAILS

NOTES:

1. CENTER INDUCTION LOOP VEHICLE DETECTOR BETWEEN LANE LINES.
2. ONE TRAFFIC LANE MUST REMAIN OPEN TO TRAFFIC DURING INSTALLATION OF MAINLINE INDUCTION LOOP VEHICLE DETECTORS.

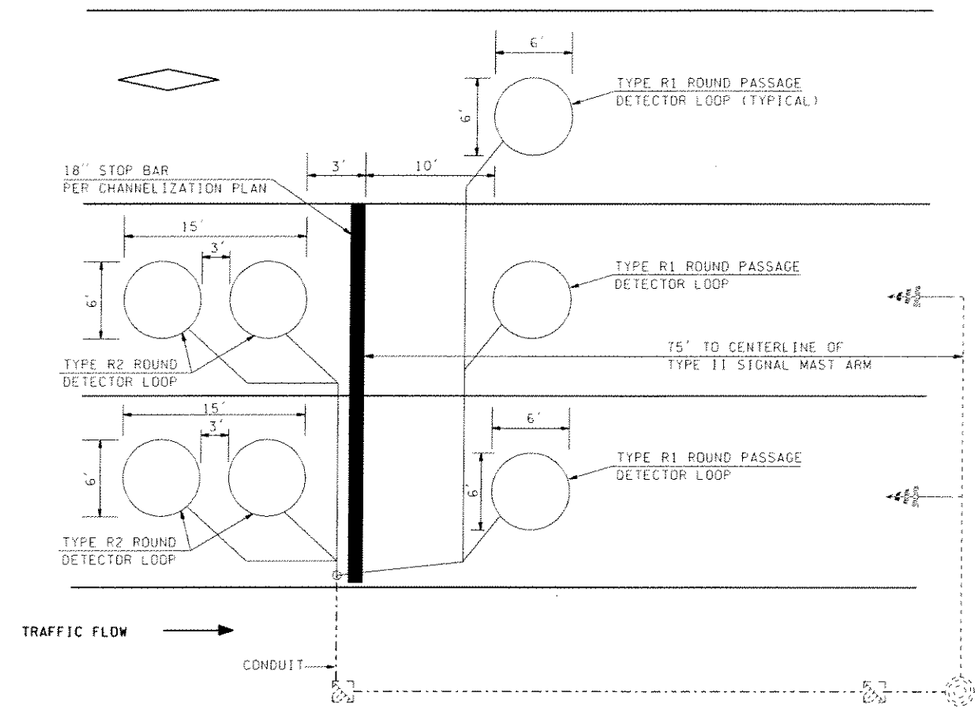

RAMP METERING PASSAGE, DEMAND AND HOV PASSAGE
LOOP LAYOUT DETAIL AT THE STOP BAR

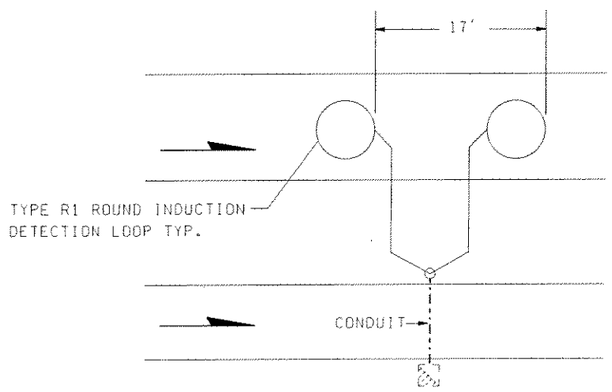

TYPE R1 INDUCTION AND SPEED ROUND LOOP

NOT TO SCALE

FILE NAME	C:\AAWork\Kirkland Nickel Stage I- ITS Master Details\Loops.dgn								PLOTS
TIME	08:52:47 AM				REGION NO. / STATE	FED.AID PROJ.NO.			
DATE	09/14/2004				10 / WASH				
PLOTTED BY	strands				JOB NUMBER				
DESIGNED BY									SHEET
ENTERED BY									OF
CHECKED BY					CONTRACT NO.	LOCATION NO.			SHEETS
PROJ. ENGR.									
REGIONAL ADM.		REVISION	DATE	BY			DATE P.E. STAMP BOX	DATE P.E. STAMP BOX	

Washington State Department of Transportation

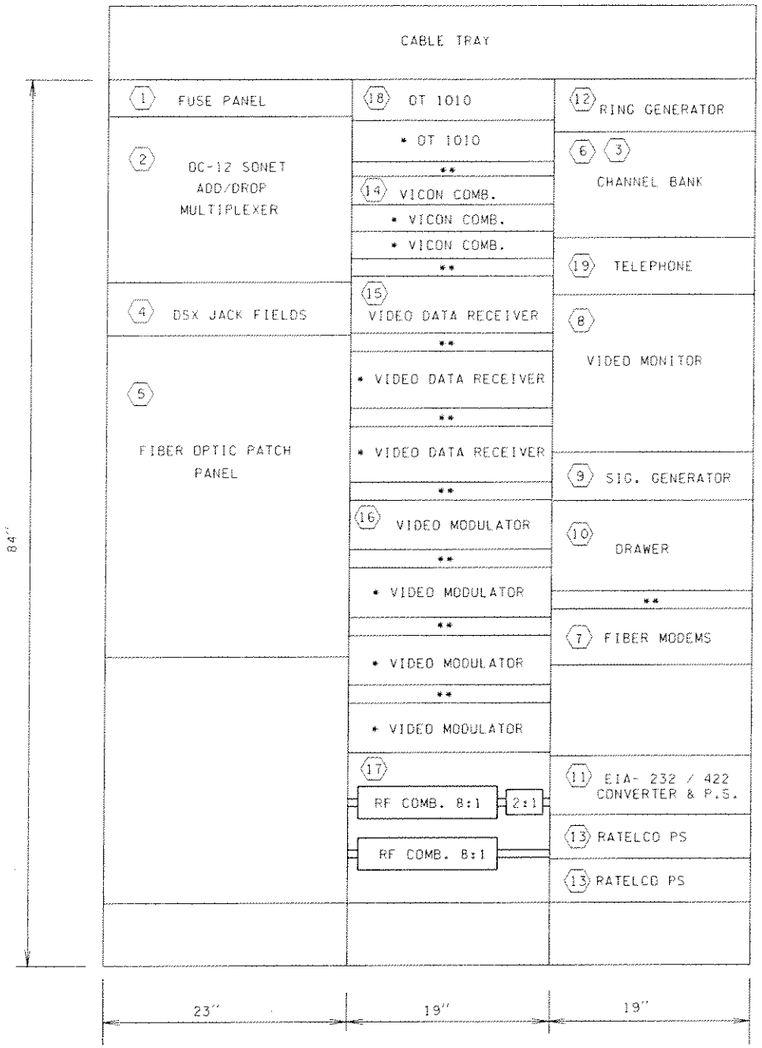

FRONT CABINET DETAIL

DS-0 TIME SLOT ASSIGNMENT FOR CHANNEL BANK			
TIME SLOT	CARD TYPE	PART NUMBER	PURPOSE
1	FXS	2443	PHONE
2	FXS	2443	SPARE
3	SRDU	2471	170 CIRCUIT
4	SRDU	2471	SPARE
5-24	BLANK	2499	SPARE

CHANNEL TIME SLOT ASSIGNMENT AND DS-0 CARD QUANTITIES

NOTES:

* FUTURE

* * SPACE 1.5" MIN. BETWEEN THE EQUIPMENT.

SCEV DIMENSIONS ARE:
H = 9'
L = 10'
W = 8'
RACKS PLACED APPROX
36" FROM BACK WALL.

NOTES:

1. INSTALL 48 VDC ALARM/FUSE PANEL PER THE SPECIAL PROVISIONS.
2. INSTALL ALCATEL 1603/12 SONET SYSTEM PER THE SPECIAL PROVISIONS. MAKE F/O CONNECTIONS TO THE F/O PATCH PANEL USING FACTORY CONNECTORIZED FC/UPC SINGLE-MODE PATCH CORDS. CONNECT THE 28 T1 OUTPUTS TO THE DSX JACKFIELDS. CONNECT 48 VDC INPUTS TO THE ALARM/ FUSE PANEL.
3. CONNECT HUB PHONE T/R TERMINALS TO THE SPECIFIED FXS CARD IN THE CHANNEL BANK VIA THE TYPE 66 BLOCKS ON THE BACKBOARD.
4. INSTALL DSX JACKFIELD WITH 32 DSX JACKS. CONNECT 28 JACKS TO THE ALCATEL 1603/12 SYSTEM. CONNECT 1 DSX JACK TO THE CHANNEL BANK USING DS-1 IDENTIFIED BY ENGINEER.
5. INSTALL FIBER OPTIC SPLICE/PATCH PANEL PER THE SPECIAL PROVISIONS.
6. INSTALL TELCO SYSTEMS DCB-24 CHANNEL BANK PER THE SPECIAL PROVISIONS. MAKE T1 CONNECTIONS TO THE DSX JACKFIELD, USE SONET DS-1 IDENTIFIED BY ENGINEER. CONNECT T/P, T1/R1, E/M, AND EG/MB TO 6 POSITION TYPE 66 BLOCKS ON BACKBOARD. PLACE DS-0 CARDS IN THE CHANNEL BANK PER THE SPECIAL PROVISIONS AND THE DS-0 ASSIGNMENT CHART ON THIS SHEET.
7. INSTALL FIBER MODEM SHELF AND 2 MODEMS PER THE SPECIAL PROVISIONS MAKE 2 EIA232 CONNECTIONS TO THE CHANNEL BANK SRDU CARDS.
8. PROVIDE AND INSTALL A FACTORY SHELF-MOUNTED COLOR VIDEO MONITOR PER SPECIAL PROVISION.
9. INSTALL COLOR BAR GENERATOR PER THE SPECIAL PROVISIONS.
10. INSTALL SLIDE-OUT DRAWER WITH FLIP OPEN LID. DRAWER SHALL MOUNT DIRECTLY TO THE 19"RAILS IN THE BAY. THE DRAWER SHALL BE AT LEAST 2" DEEP, 19" WIDE, AND AT LEAST 12" LONG AND THE FRONT FLUSH WITH THE 19" RACK.
11. INSTALL EIA-232/422 CONVERTOR SHELF WITH 2 CONVERTOR MODULES PER THE SPECIAL PROVISIONS. MAKE 1 EIA-422 CONNECTION TO THE VICON EIA-422 COMBINER IN BAY #2. MAKE AC POWER CONNECTIONS TO PLUG MOLD STRIP.
12. INSTALL RING GENERATOR AND CONNECT THE 48 VDC INPUTS TO THE ALARM/ FUSE PANEL PER THE SPECIAL PROVISIONS. BIAS THE RING VOLTAGE WITH -48 VDC AND CONNECT THE OUTPUT TO THE RING SUPPLY INPUTS ON THE CHANNEL BANK.
13. INSTALL TWO RATELCO 48 VDC POWER SUPPLIES PER THE SPECIAL PROVISIONS. CONNECT THE 48 VDC OUTPUT TO THE FUSE PANEL. CONNECT THE 120 VAC POWER CORDS TO THE PLUG MOLD STRIP.
14. INSTALL ONE VICON EIA-422 COMBINER/DISTRIBUTION UNIT PER THE SPECIAL PROVISIONS.
15. INSTALL ONE SINGLE-MODE F/O RECEIVER SHELF WITH 2 POWER SUPPLIES PER THE SPECIAL PROVISIONS. INSTALL 3 RECEIVERS IN THE SHELF. CONNECT THE SHELF TO AC POWER VIA THE PLUG MOLD STRIP. MAKE F/O CONNECTIONS TO THE F/O PATCH PANEL USING FACTORY-CONNECTORIZED FC/UPC SINGLE-MODE PATCH CORDS. CONNECT THE VIDEO OUTPUTS TO THE CFM MODULATORS USING RG-59/U PATCH CORDS. CONNECT THE EIA-422 PORTS TO THE VICON COMBINER PORTS.
16. INSTALL ONE CFM MODULATOR SHELF WITH POWER SUPPLY AND A TOTAL OF 3 MODULATORS PER THE SPECIAL PROVISIONS. CONNECT THE MODULATOR OUTPUTS TO THE RF COMBINERS USING RG-59/U PATCH CORDS.
17. INSTALL TWO 8:1 RF COMBINERS AND ONE 2:1 RF COMBINER PER THE SPECIAL PROVISIONS. CAP ALL UNUSED COMBINER PORTS WITH 75 OHM TERMINATORS. CONNECT THE OUTPUT OF THE 2:1 COMBINER TO THE F/O TRANSMITTER USING AN RG-59/U PATCH CORD.
18. INSTALL ONE CATEL OPTICAL TRANSMITTER PER THE SPECIAL PROVISIONS. CONNECT THE OPTICAL OUTPUT TO THE F/O PATCH PANEL USING A FACTORY-CONNECTORIZED FC/UPC SINGLE-MODE PATCH CORD.
19. INSTALL HUB TELEPHONE PER THE SPECIAL PROVISIONS.

ELECTRONIC EQUIPMENT INSTALLATION DETAILS FOR MIDWAY HUB

DESIGNED BY				
ENTERED BY				
CHECKED BY				
PROJ. ENGR.				
REGIONAL ADM.				
	DATE	DATE	REVISION	BY

REGION NO.	STATE	FED.AID PROJ.NO.
10	WASH	
JOB NUMBER		
CONTRACT NO.		

ENVIRONMENTAL AND ENGINEERING SERVICE CENTER

Washington State Department of Transportation

ITS MASTER DETAILS ENGLISH

ELECTR. EQUIP. INSTAL. FOR HUB

EQUI1

SHEET 13.2E OF SHEETS

PLOT3 C:\AD0014\K2D041 and Nickel Stage 1 - ITS Master Details\Stteandsc.dg

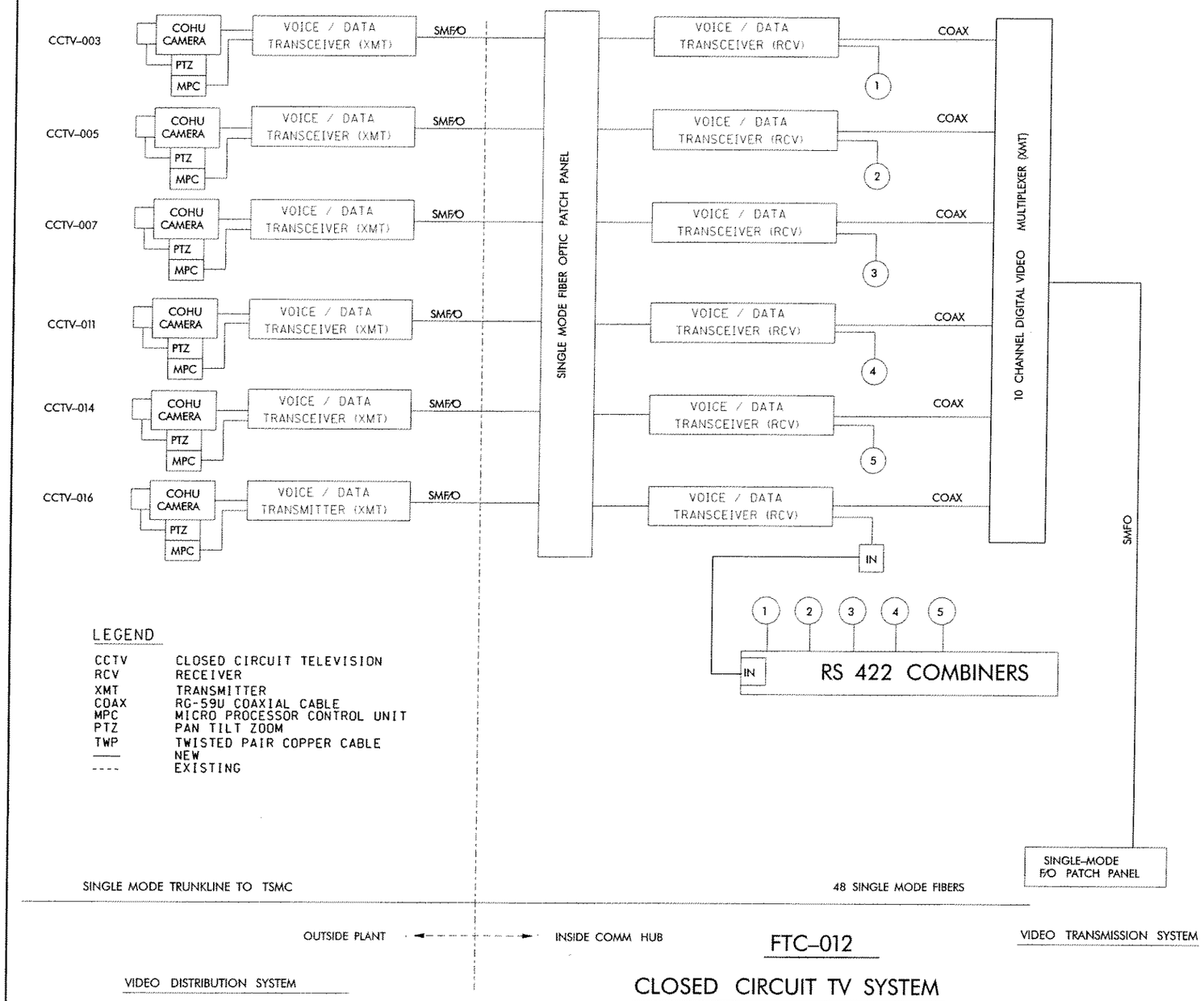

LEGEND

CCTV	CLOSED CIRCUIT TELEVISION
RCV	RECEIVER
XMT	TRANSMITTER
COAX	RG-59U COAXIAL CABLE
MPC	MICRO PROCESSOR CONTROL UNIT
PTZ	PAN TILT ZOOM
TWP	TWISTED PAIR COPPER CABLE
——	NEW
----	EXISTING

FTC-012

CLOSED CIRCUIT TV SYSTEM

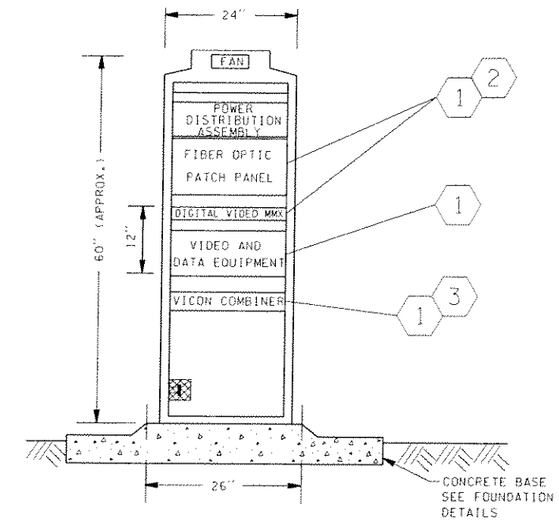

NOT TO SCALE

CONSTRUCTION NOTES

1 INSTALL SIX OPTELECOM RECEIVERS, HUB CHASSIS, ONE NETWORK INTERFACE CARD AND TWO POWER SUPPLIES PER THE SPECIAL PROVISIONS. MAKE F/O CONNECTION TO THE F/O PATCH PANEL USING FC/UPC SINGLE-MODE PATCH CORDS. CONNECT THE VIDEO OUTPUTS TO THE DIGITAL VIDEO TRANSMITTER INPUTS USING RG-59/U PATCH CORDS. CONNECT THE EIA 422 PORTS TO THE VICON COMBINER INPUT PORTS.

2 INSTALL DECIMUX OPTICAL TRANSMITTER. CONNECT THE OPTICAL PORT TO THE PATCH PANEL USING FC/UPC PATCH CORD.

3 INSTALL EIA-422 COMBINER.

ELECTRONIC EQUIPMENT INSTALLATION DETAILS FOR FTC-012

FILE NAME	C:\AAWork\Kirkland NickelStage I- ITS Master Details\Electric.dgn						
TIME	09:06:37 AM			REGION NO.	STATE	FED.AID PROJ.NO.	
DATE	09/14/2004			10	WASH		
PLOTTED BY	strands			JOB NUMBER			
DESIGNED BY							
ENTERED BY							
CHECKED BY				CONTRACT NO.		LOCATION NO.	
PROJ. ENGR.							
REGIONAL ADM.		REVISION	DATE	BY			

P.E. STAMP BOX DATE

P.E. STAMP BOX DATE

Washington State Department of Transportation

PLOT4

SHEET OF SHEETS

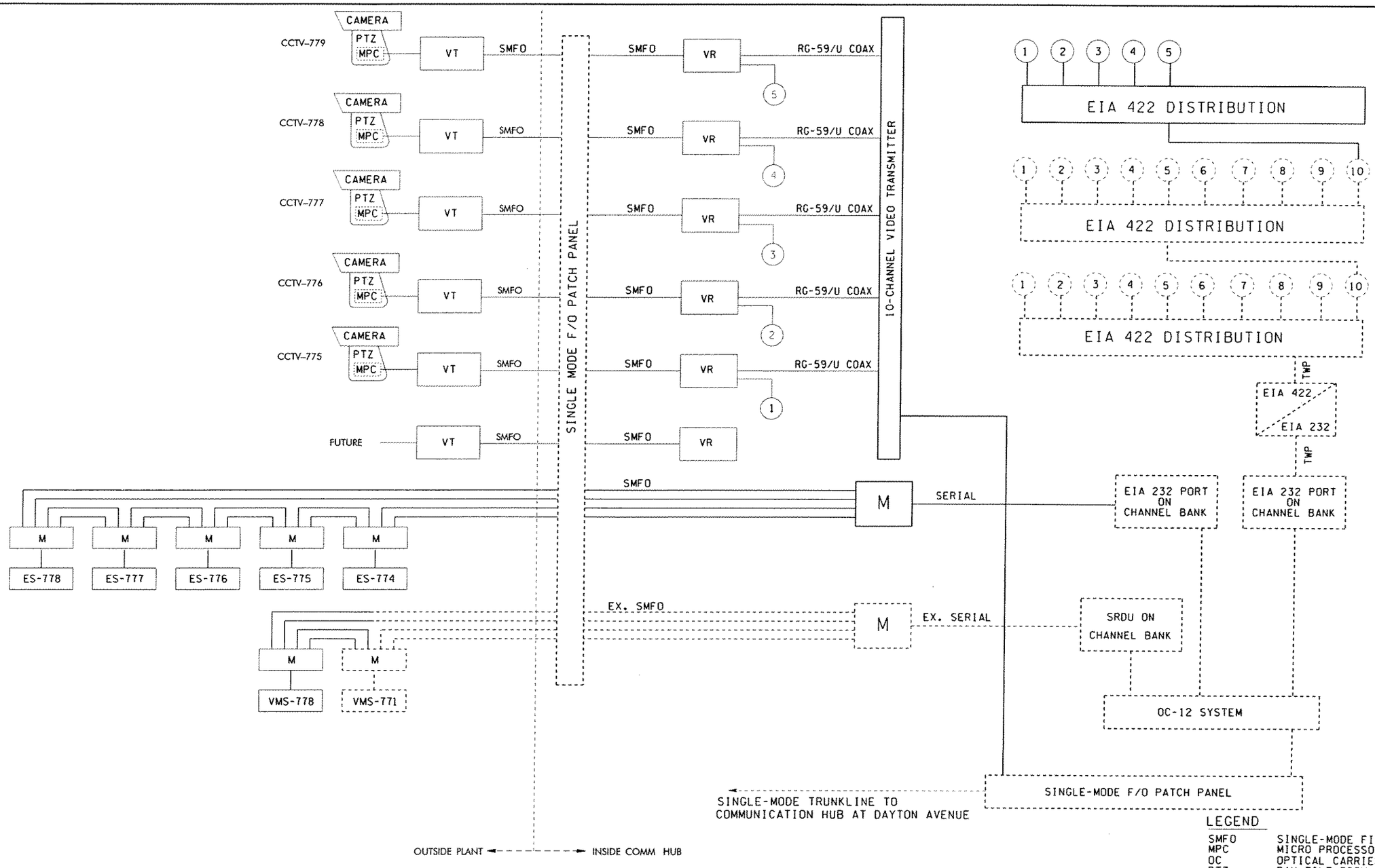

SWAMP CREEK HUB

CLOSED CIRCUIT TV AND VOICE / DATA SYSTEMS

LEGEND

SMFO	SINGLE-MODE FIBER OPTIC CABLE
MPC	MICRO PROCESSOR CONTROL UNIT
OC	OPTICAL CARRIER
PTZ	PAN TILT ZOOM
VT	OPTELECOM VIDEO TRANSMITTER
VR	OPTELCOM VIDEO RECEIVER
TWP	TWISTED PAIR COPPER CABLE
——	NEW
- - - -	EXISTING
M	FIBER OPTIC MODEM

FILE NAME	C:\AAWork\Kirkland NickelStage I- ITS Master Details\Electric.dgn			REGION NO.	STATE	FED.AID PROJ.NO.
TIME	09:06:41 AM			10	WASH	
DATE	09/14/2004			JOB NUMBER		
DESIGNED BY						
ENTERED BY				CONTRACT NO.		LOCATION NO.
CHECKED BY						
PROJ. ENGR.						
REGIONAL ADM.	REVISION	DATE	BY			

P.E. STAMP BOX — DATE

P.E. STAMP BOX — DATE

Washington State Department of Transportation

PLOTS

SHEET OF SHEETS

PLOT1 C:\AA0014\K2DOM1 and Nickel Stage 1 - ITS Master Details\&teamdsc.dg

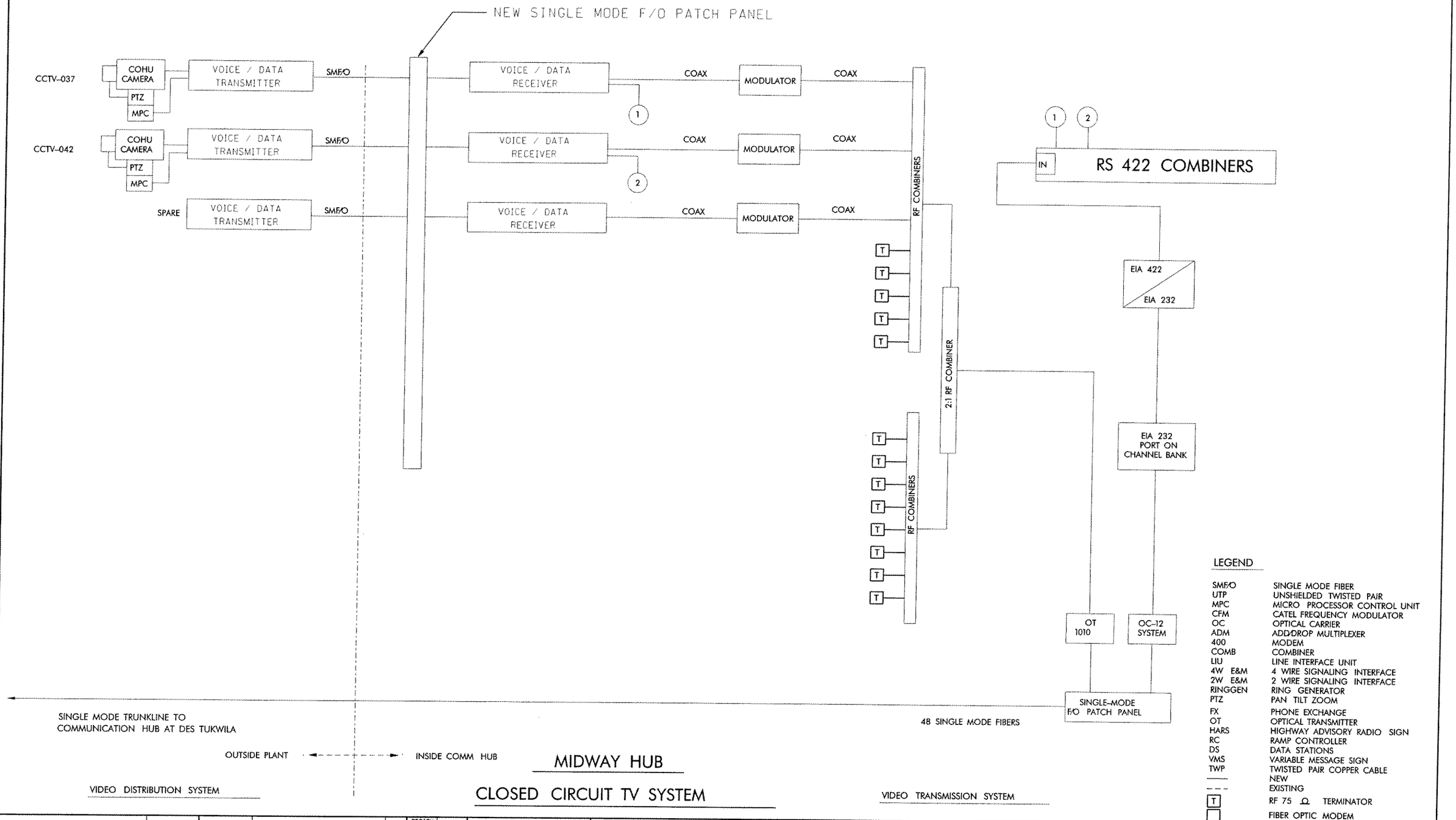

DESIGNED BY				
ENTERED BY				
CHECKED BY				
PROJ. ENGR.				
REGIONAL ADM.				
	DATE	DATE	REVISION	BY

REGION NO.	STATE	FED.AID PROJ.NO.
10	WASH	
JOB NUMBER		
CONTRACT NO.		

ENVIRONMENTAL AND ENGINEERING SERVICE CENTER

Washington State Department of Transportation

ITS MASTER DETAILS ENGLISH

CCTV SYSTEM

CCTV

SHEET 13.0E OF SHEETS

PLOT2 C:\ADOBEIMX2DGN\and Nickel Stage 1 - ITS Master Details\61tcmtds.dg

RAMP METERS AND DATA STATIONS

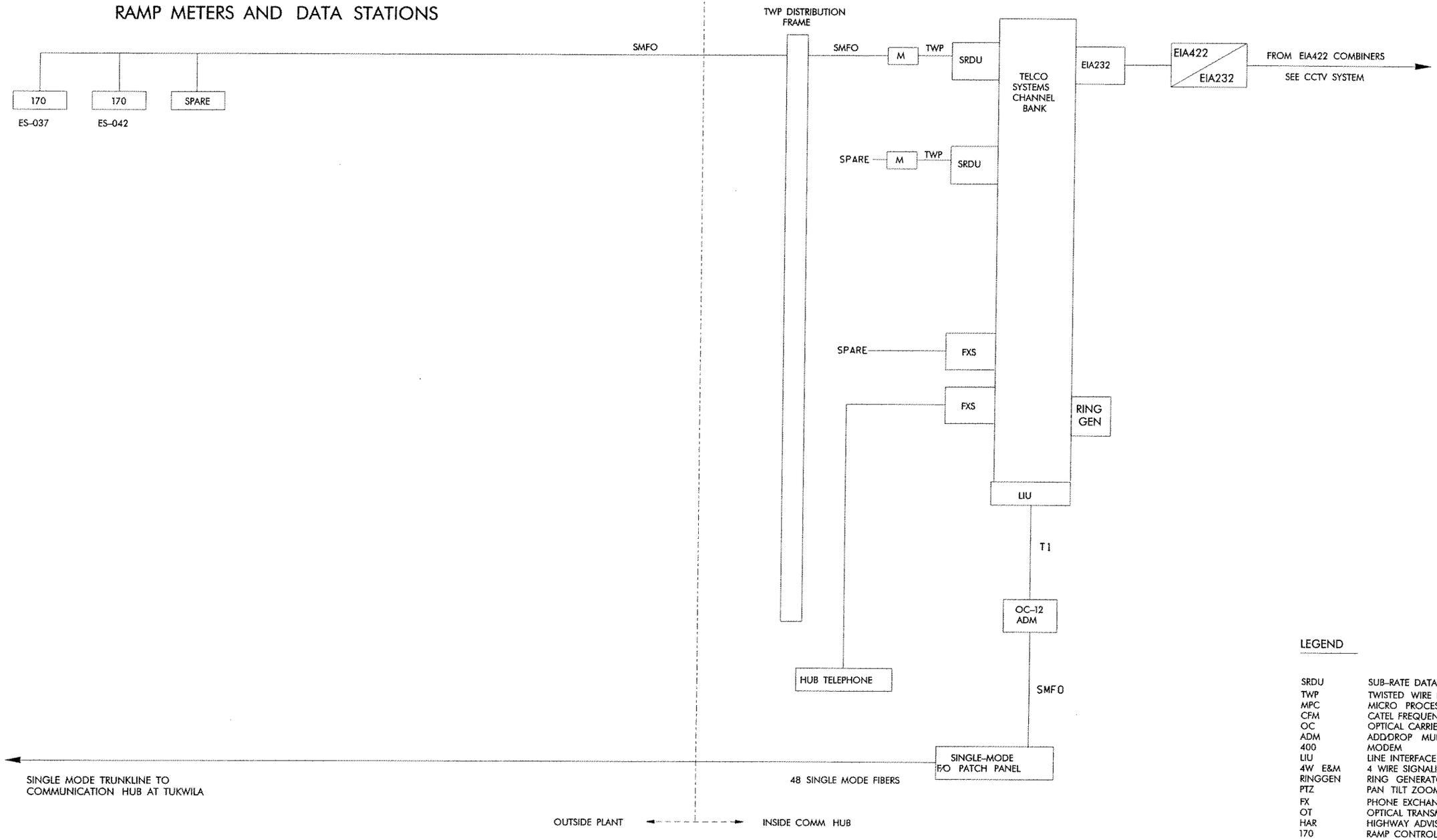

VOICE AND DATA DISTRIBUTION SYSTEM

VOICE AND DATA TRANSMISSION SYSTEM

MIDWAY
VOICE AND DATA SYSTEM

LEGEND

SRDU	SUB-RATE DATA UNIT
TWP	TWISTED WIRE PAIR COPPER
MPC	MICRO PROCESSOR CONTROL UNIT
CFM	CATEL FREQUENCY MODULATOR
OC	OPTICAL CARRIER
ADM	ADD/DROP MULTIPLEXER
400	MODEM
LIU	LINE INTERFACE UNIT
4W E&M	4 WIRE SIGNALING INTERFACE
RINGGEN	RING GENERATOR
PTZ	PAN TILT ZOOM
FX	PHONE EXCHANGE
OT	OPTICAL TRANSMITTER
HAR	HIGHWAY ADVISORY RADIO
170	RAMP CONTROLLER / DATA STATIONS
VMS	VARIABLE MESSAGE SIGN
T-1	1.544 Mbit DATA ON TWP
———	NEW
- - -	EXISTING
[T]	RF TERMINATOR
[M]	FIBER OPTIC MODEM

	DATE	DATE	REVISION	BY
DESIGNED BY				
ENTERED BY				
CHECKED BY				
PROJ. ENGR.				
REGIONAL ADM.				

REGION NO.	STATE	FED.AID PROJ.NO.
10	WASH	

JOB NUMBER

CONTRACT NO.

ENVIRONMENTAL AND ENGINEERING SERVICE CENTER

Washington State Department of Transportation

MASTER DETAILS

VOICE AND DATA SYSTEM

V&D

SHEET 13.1E OF SHEETS

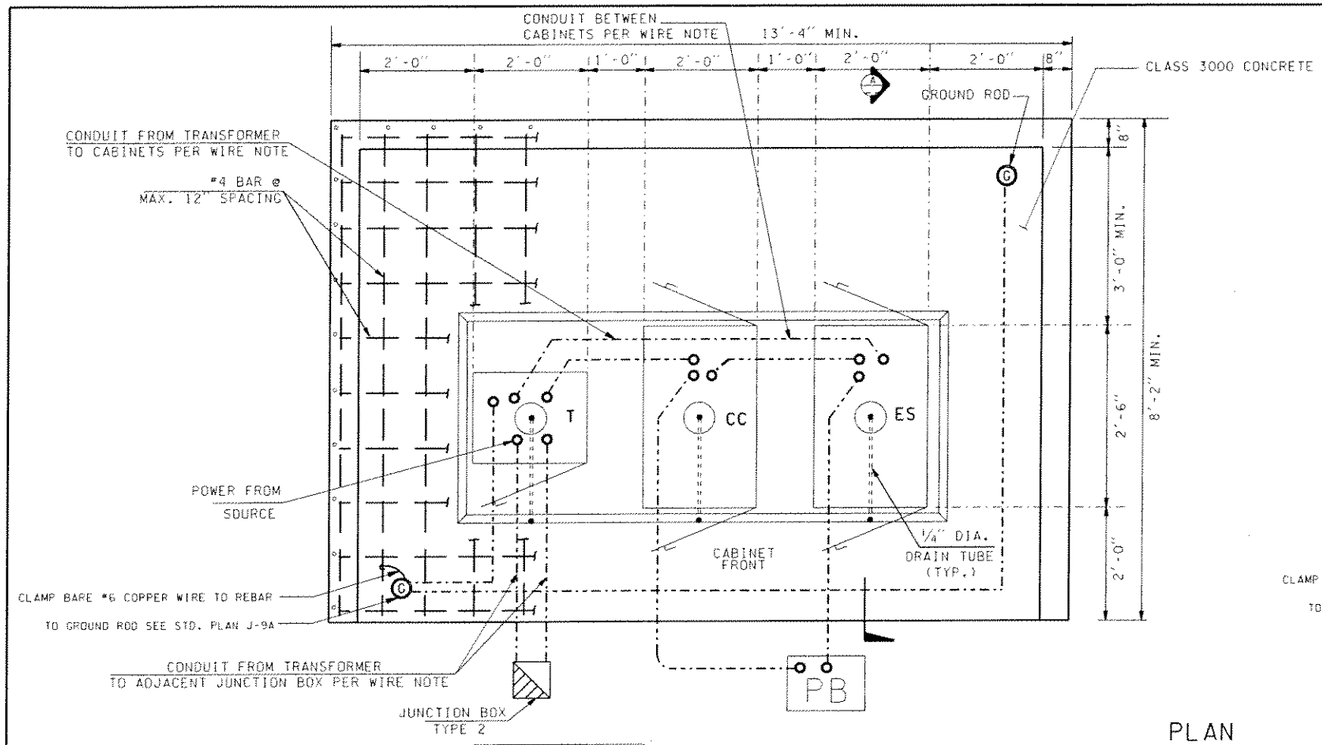

PLAN

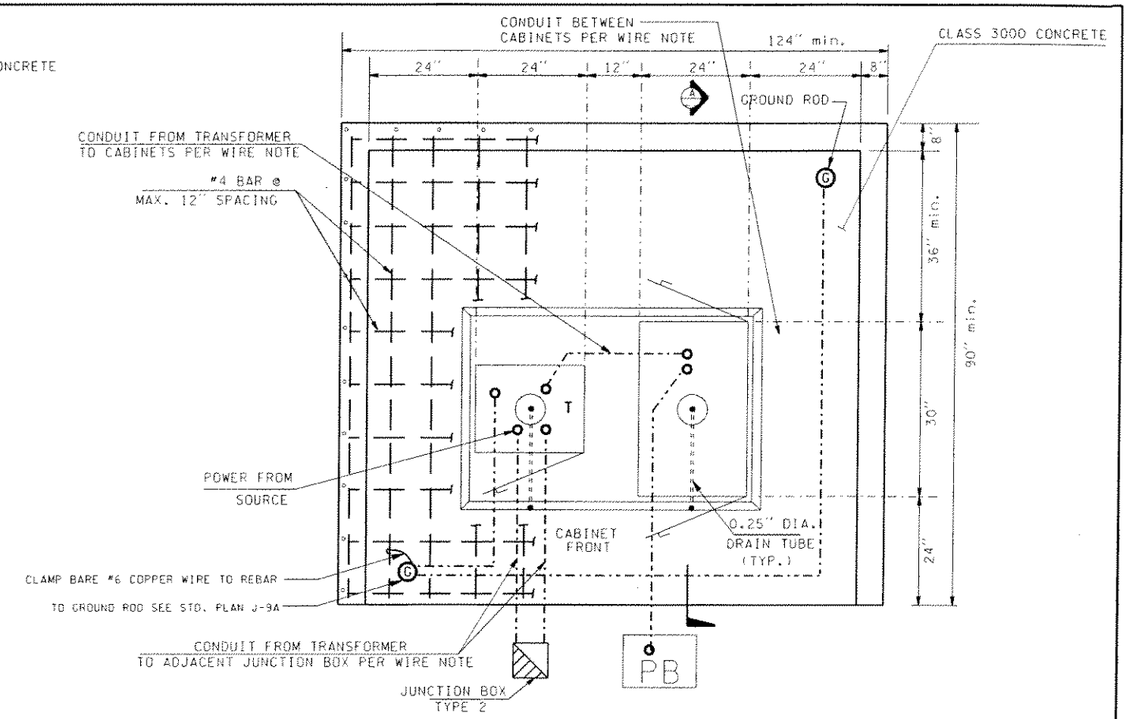

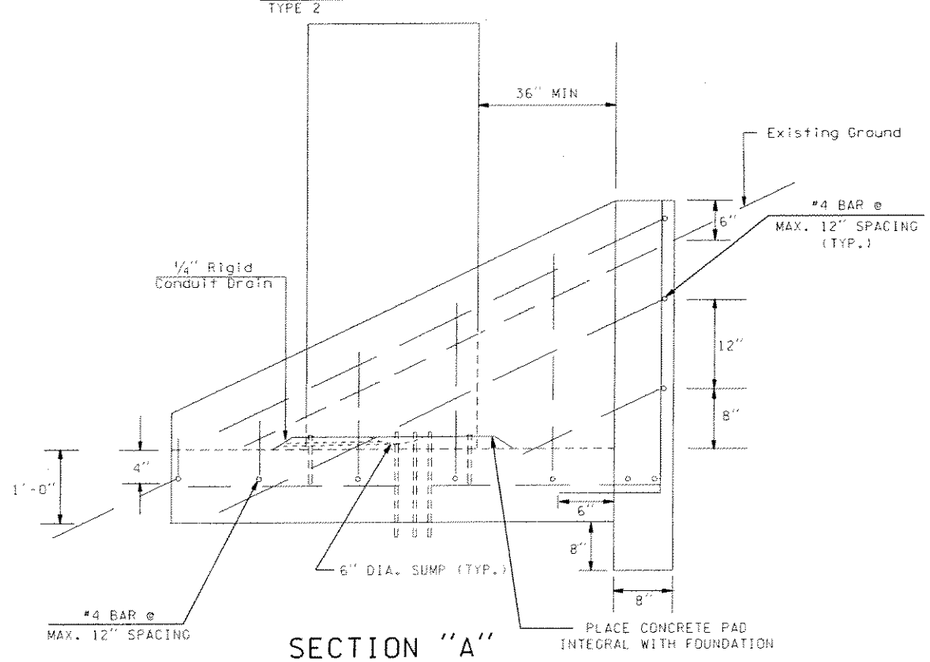

SECTION "A"

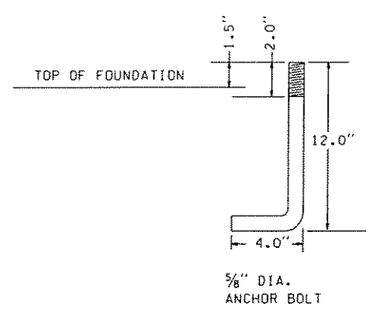

NOTES:

1. All Reinforcing Steel Shall Have A Min. of 2" Clear Cover.
2. All Conduits To Be Clustered Toward Rear Of The Cabinets.
3. Slope Foundation 1/4"/ft. To The Edge.
4. Slope Pads 1/4"/ft. To The Sump In Center.
5. All Conduits Shall Have A Coupling Flush With The Surface Of The Foundation And A Nipple That Extends 2" Up.
6. All Conduits Shall Be Hot Dipped Galvanized or PVC.
7. All Controller Cabinets Shall Be H=64",W=24",D=30".
8. Transformer And Terminal Cabinets Are 48" High By 24" Wide By 18" Deep.
9. Use Silicone Beaded Sealant Around Cabinets And Pad.
10. Bolt Pattern Is provided by Cabinet Manufacturer. Bolts Shall Be 5/8" Dia. And Extend A Min. of 1 1/2" Above Concrete Pad.
11. For Each Additional Cabinet Add 36" to D2 Foundation Width.
12. Concrete Shall Be Class 3000.
13. Any Other Dimension Must Be Approved By The Engineer.
14. VMS Pad Size Is Provided By Cabinet Manufacturer.
15. All Anchor Bolts Shall Be Hot Dipped Galvanized. Alternate: Stainless Steel Cinch Bolts Per Manufacture's Recommendation. Bolt Shall Extend a Min. 1.5 inches Above The Concrete Pad.

SINGLE AND MULTIPLE CABINET FOUNDATION DETAIL WITH TRANSFORMER

FOOTING FOR SLOPED AREA

FILE NAME	C:\AAWork\Kirkland NickelStage I- ITS Master Details\Found.dgn						PLOT3
TIME	05:01:49 PM			REGION NO.	STATE	FED.AID PROJ.NO.	
DATE	09/13/2004			10	WASH		
DESIGNED BY				JOB NUMBER			SHEET
ENTERED BY							OF
CHECKED BY				CONTRACT NO.		LOCATION NO.	
PROJ. ENGR.							SHEETS
REGIONAL ADM.		REVISION	DATE	BY			

P.E. STAMP BOX DATE

P.E. STAMP BOX DATE

Washington State Department of Transportation

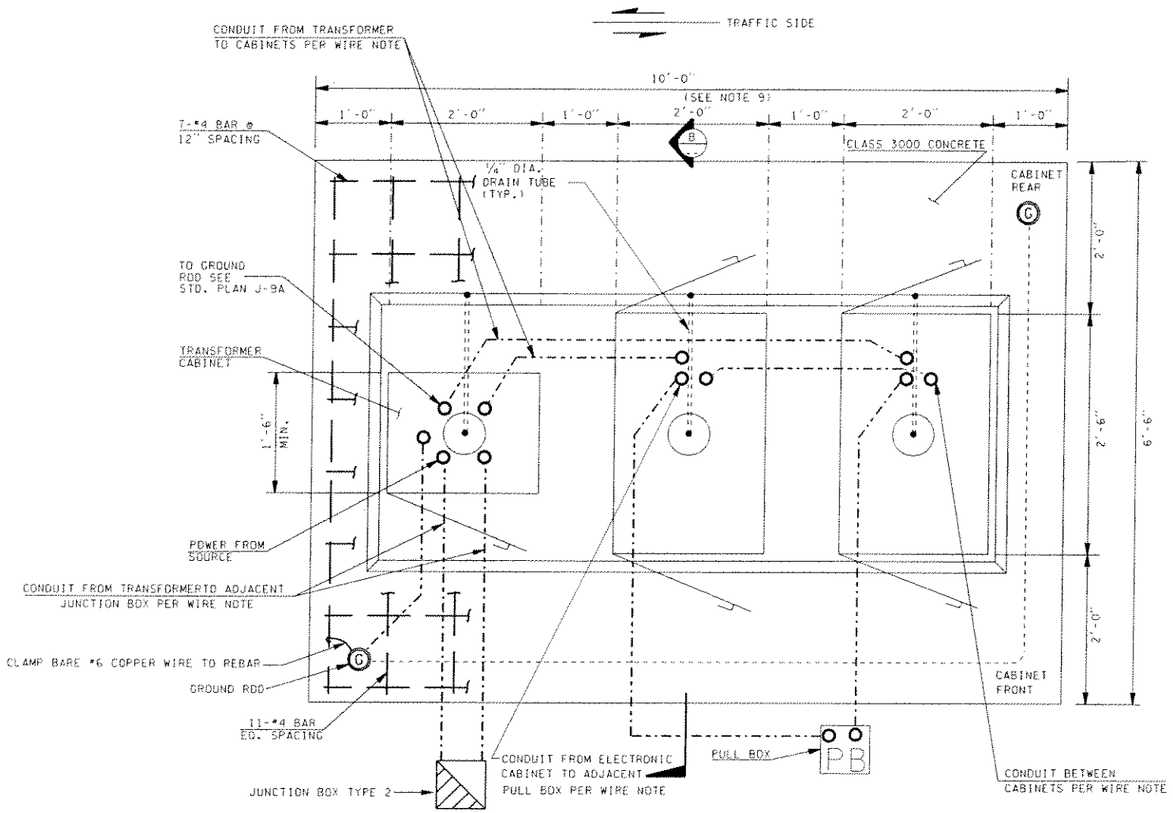

PLAN

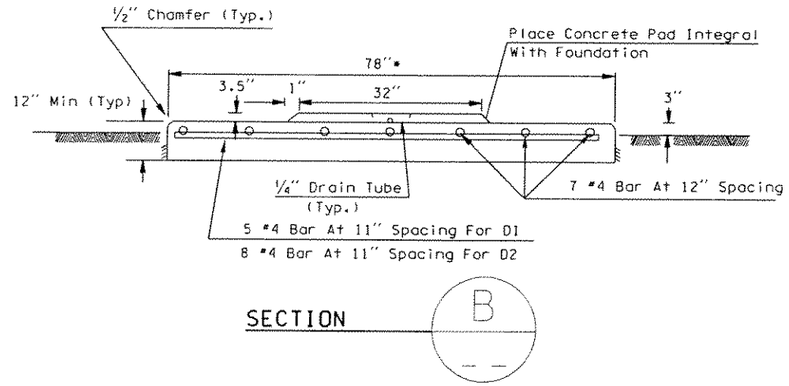

SECTION

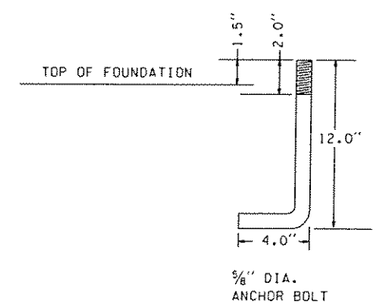

NOTES:

1. All Reinforcing Steel Shall Have A Min. of 2" Clear Cover.
2. All Conduits To Be Clustered Toward Rear Of The Cabinets.
3. Slope Foundation 1/4"/ft. To The Edge.
4. Slope Pads 1/4"/ft. To The Sump In Center.
5. All Conduits Shall Have A Coupling Flush With The Surface Of The Foundation And A Nipple That Extends 2" Up.
6. All Conduits Shall Be Hot Dipped Galvanized or PVC.
7. All Controller Cabinets Shall Be H=64",W=24",D=30".
8. Transformer And Terminal Cabinets Are 48" High By 24" Wide By 18" Deep.
9. Use Silicone Beaded Sealant Around Cabinets And Pad.
10. Bolt Pattern Is provided by Cabinet Manufacturer. Bolts Shall Be 5/8" Dia. And Extend A Min. of 1 1/2" Above Concrete Pad.
11. For Each Additional Cabinet Add 36" to D2 Foundation Width.
12. Concrete Shall Be Class 3000.
13. • Any Other Dimension Must Be Approved By The Engineer.
14. VMS Pad Size Is Provided By Cabinet Manufacturer.
15. All Anchor Bolts Shall Be Hot Dipped Galvanized. Alternate: Stainless Steel Cinch Bolts Per Manufacture's Recommendation. Bolt Shall Extend a Min. 1.5 inches Above The Concrete Pad.

TYPICAL MULTIPLE CABINET WITH TRANSFORMER FOUNDATION DETAIL

FOUNDATION DETAILS

NOT TO SCALE

FILE NAME	C:\AAWork\Kirkland NickelStage I- ITS Master Details\Found.dgn						
TIME	05:01:42 PM				REGION NO.	STATE	FED.AID PROJ.NO.
DATE	09/13/2004				10	WASH	
DESIGNED BY					JOB NUMBER		
ENTERED BY							
CHECKED BY					CONTRACT NO.		LOCATION NO.
PROJ. ENGR.							
REGIONAL ADM.		REVISION	DATE	BY			

P.E. STAMP BOX DATE

P.E. STAMP BOX DATE

Washington State Department of Transportation

PLOT1

SHEET OF SHEETS

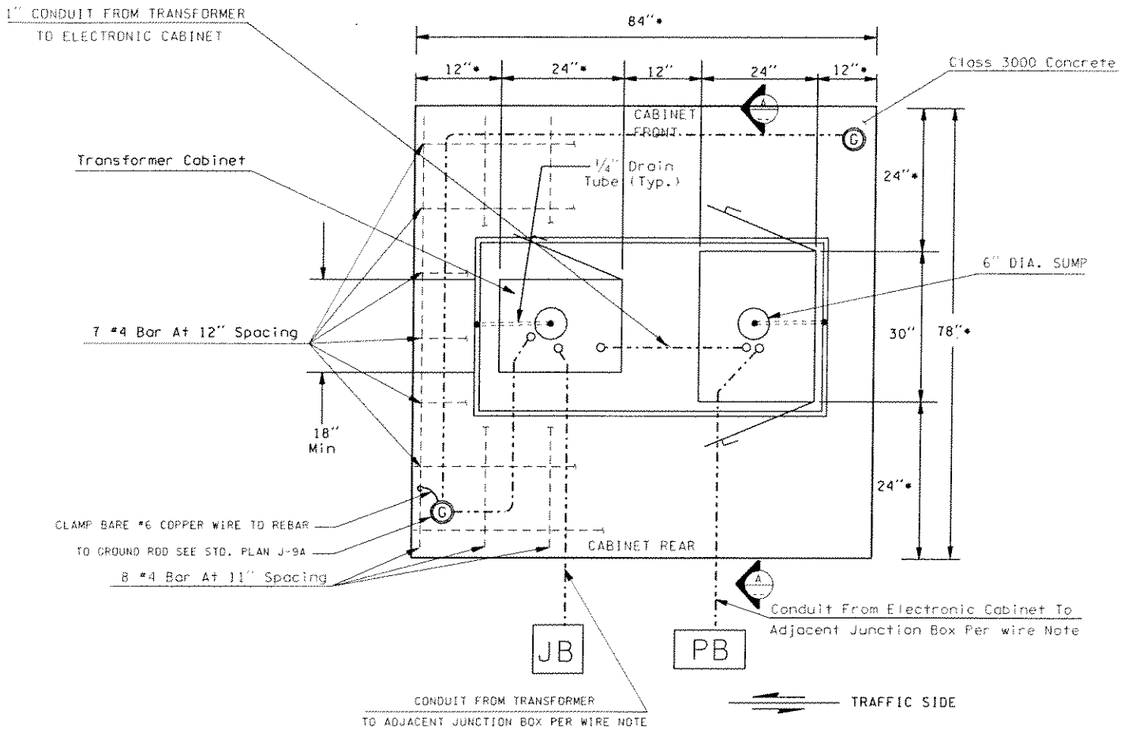

PLAN

TYPICAL SINGLE CABINET WITH TRANSFORMER FOUNDATION DETAIL

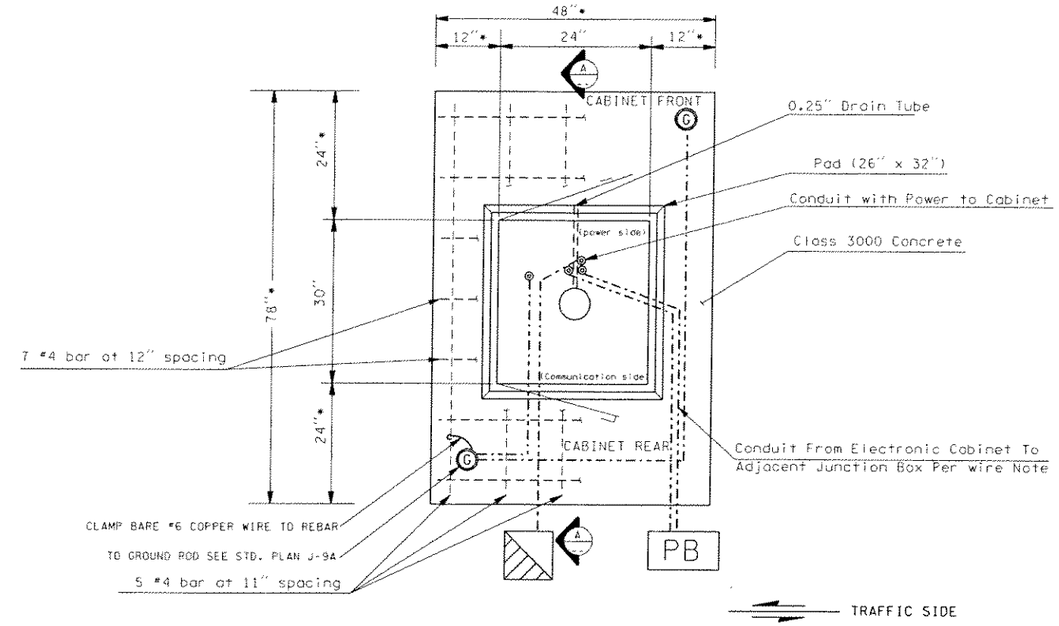

PLAN

TYPICAL SINGLE CABINET FOUNDATION DETAIL

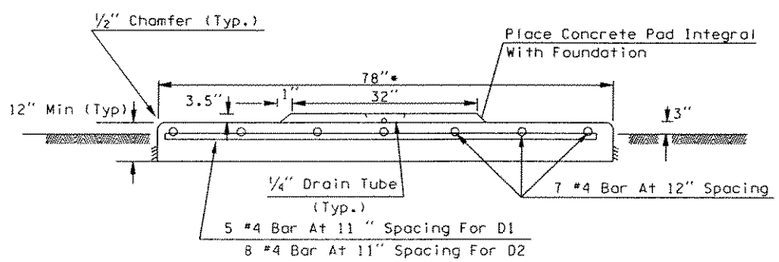

SECTION A-A

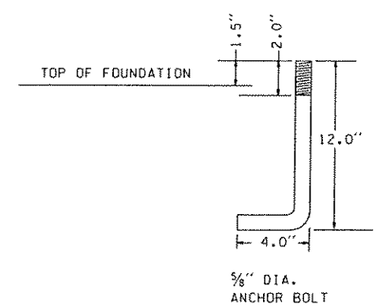

FOUNDATION DETAILS

NOT TO SCALE

NOTES:

1. ALL REINFORCING STEEL SHALL HAVE A MIN. OF 2" CLEAR COVER.
2. ALL CONDUITS TO BE CLUSTERED TOWARD REAR OF THE CABINETS.
3. SLOPE FOUNDATION 1/4"/FT. TO THE EDGE.
4. SLOPE PADS 1/4"/FT. TO THE SUMP IN CENTER.
5. ALL CONDUITS SHALL HAVE A COUPLING FLUSH WITH THE SURFACE OF THE FOUNDATION AND A NIPPLE THAT EXTENDS 2" UP.
6. ALL CONDUITS SHALL BE HOT DIPPED GALVANIZED OR PVC.
7. ALL CONTROLLER CABINETS SHALL BE H=64",W=24",D=30".
8. TRANSFORMER AND TERMINAL CABINETS ARE 48" HIGH BY 24" WIDE BY 18" DEEP.
9. USE SILICONE BEADED SEALANT AROUND CABINETS AND PAD.
10. BOLT PATTERN IS PROVIDED BY CABINET MANUFACTURER. BOLTS SHALL BE 5/8" DIA. AND EXTEND A MIN. OF 1 1/2" ABOVE CONCRETE PAD.
11. FOR EACH ADDITIONAL CABINET ADD 36" TO D2 FOUNDATION WIDTH.
12. CONCRETE SHALL BE CLASS 3000.
13. • ANY OTHER DIMENSION MUST BE APPROVED BY THE ENGINEER.
14. VMS PAD SIZE IS PROVIDED BY CABINET MANUFACTURER.
15. ALL ANCHOR BOLTS SHALL BE HOT DIPPED GALVANIZED. ALTERNATE: STAINLESS STEEL CINCH BOLTS PER MANUFACTURE'S RECOMMENDATION. BOLT SHALL EXTEND A MIN. 1.5 INCHES ABOVE THE CONCRETE PAD.

FILE NAME	C:\AAWork\Kirkland NickelStage I- ITS Master Details\Found.dgn								PLOT2
TIME	05:01:46 PM				REGION NO. / STATE	FED.AID PROJ.NO.			
DATE	09/13/2004				10 / WASH				
DESIGNED BY					JOB NUMBER				
ENTERED BY									
CHECKED BY					CONTRACT NO.	LOCATION NO.			SHEET OF SHEETS
PROJ. ENGR.									
REGIONAL ADM.		REVISION	DATE	BY			P.E. STAMP BOX DATE	P.E. STAMP BOX DATE	

Washington State Department of Transportation

PLOT1 C:\AA0\k4K2004 and Nickel Stage 1 - ITS Master Details\Rampmeter.dr

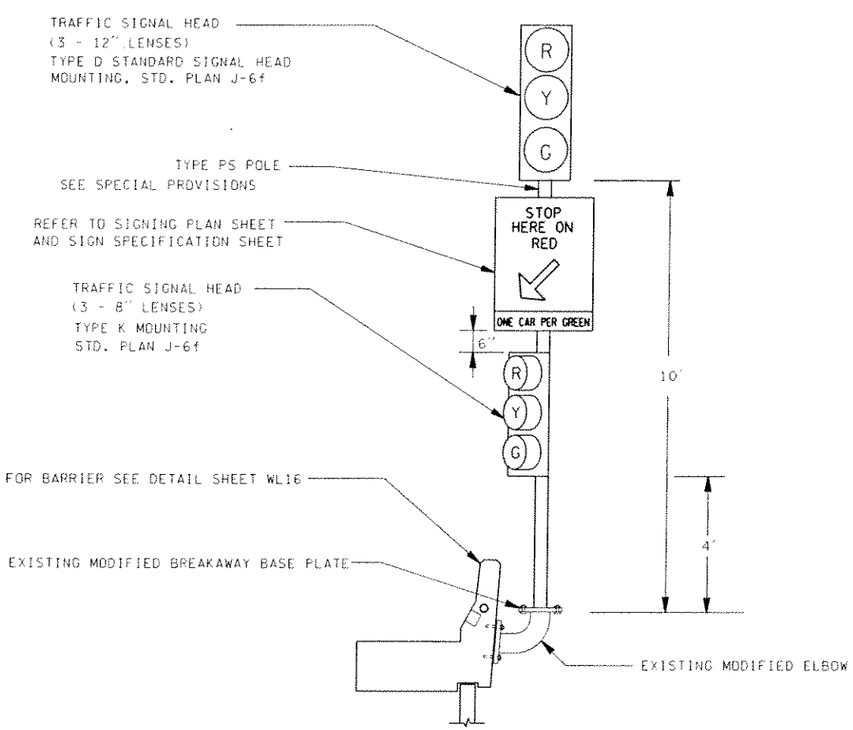

RAMP METER SIGNAL HEAD AND ELBOW ASSEMBLY DETAIL

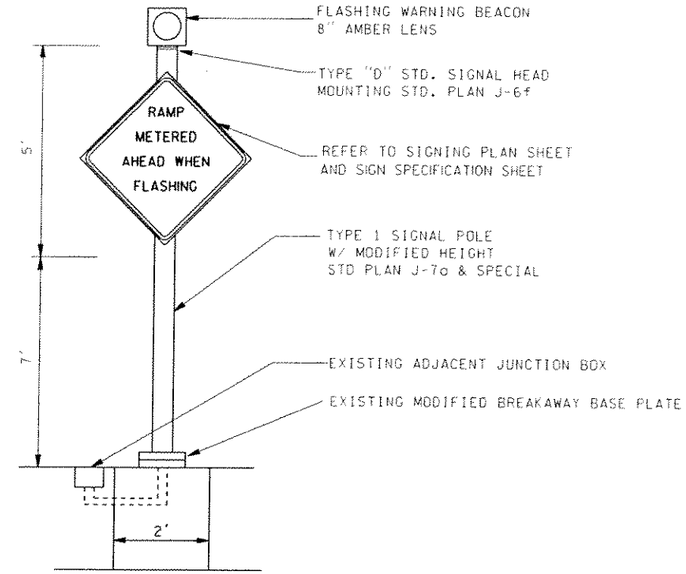

RAMP METERING AHEAD SIGN POST DETAIL

NOTE:

1. INSTALL LOWER SIGNAL HEAD AT HEIGHT OF 5'6" IF LOCATED BEHIND GUARDRAIL.

POLE#	SIGNAL POLE SCHEDULE					
	LINE	STATION	OFFSET	LT/RT	TYPE	REMARK
1	3RD-W RAMP	224+50	10	RT	RM	INSTALL ON EXISTING FOUNDATION
2	C-W RAMP	228+00	30	LT	RM	INSTALL ON EXISTING ELBOW ONLY
3	C-W RAMP	232+25	50	LT	FB	INSTALL ON EXISTING FOUNDATION
4	C-W RAMP	232+75	80	LT	FB	INSTALL ON EXISTINGFOUNDATION
5	3RD-W RAMP	234+00	23	LT	FB	INSTALL ON EXISTING FOUNDATION

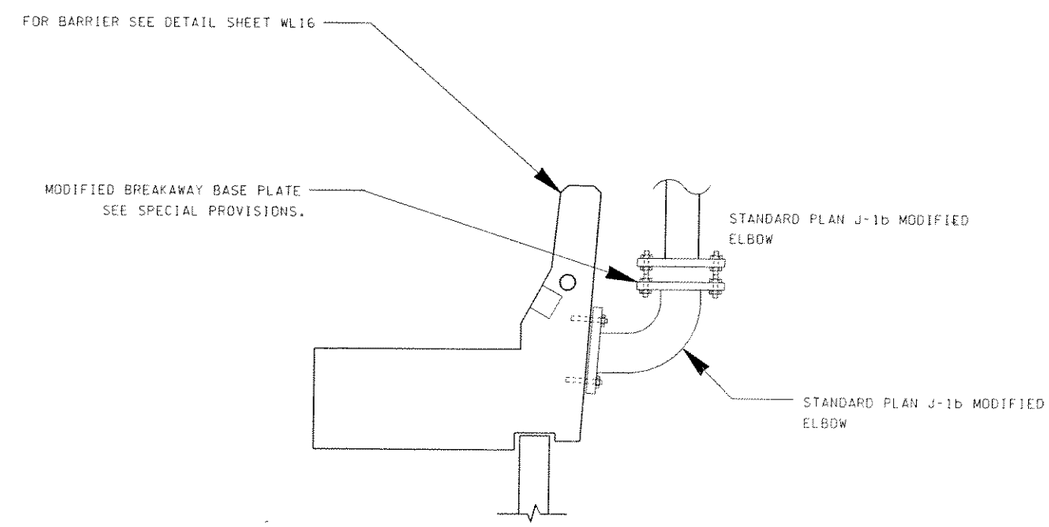

DESIGNED BY				
ENTERED BY				
CHECKED BY				
PROJ. ENGR.				
REGIONAL ADM.		3/10/00		
	DATE	DATE	REVISION	BY

REGION NO.	STATE	FED.AID PROJ.NO.
10	WASH	
JOB NUMBER		
CONTRACT NO.		

ENVIRONMENTAL AND ENGINEERING SERVICE CENTER

Washington State Department of Transportation

ITS MASTER DETAIL ENGLISH

RAMP METER DETAIL

RM1

SHEET 2.0E OF SHEETS

PLOT4C:\AAW09K\M1200 and Nickel Stage 1 - ITS Master Details\Transformer.

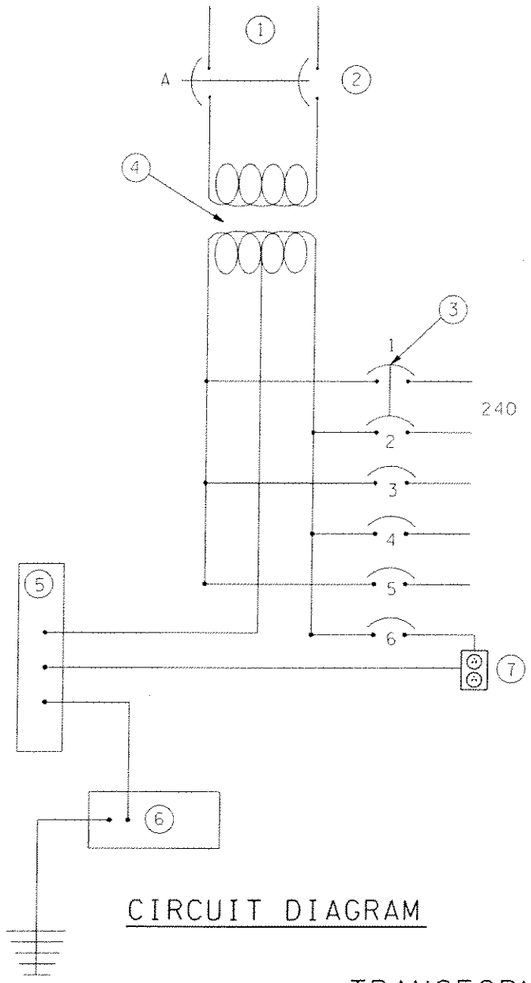

CIRCUIT DIAGRAM

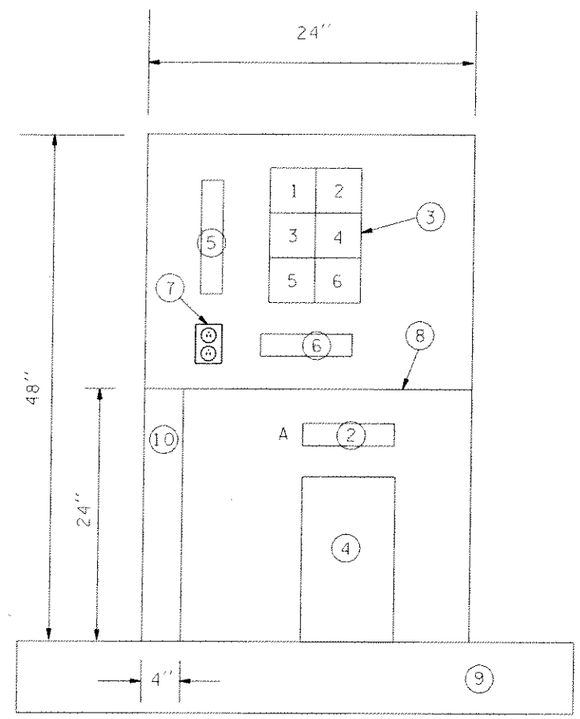

INTERIOR DETAILS
(WITH DEAD FRONTS REMOVED)

TRANSFORMER DETAIL
480V-120V/240V

T-		POWER FROM		SUA		CKT#
BREAKER NO.	CIRCUIT VOLTAGE	BREAKER RATING	BREAKER TYPE	KVA LOAD	AMP LOAD	CIRCUIT NAME
PRIMARY						
A	480	25 A	D.P.S.T	10.5	31.2	MAIN BREAKER
SECONDARY						
1	240	40 A	D.P.S.T.	7.5	62.5	VMS
2	240	40 A	D.P.S.T.	7.5	62.5	VMS
3	120	20 A	S.P.S.T.			
4	120	20 A	S.P.S.T.			
5	-----	-----				
6	120	20 A	S.P.S.T.	2		GFI
TRANSFORMER RATED LOAD			7.5 KVA			
TRANSFORMER ACTUAL LOAD			7.5 KVA			

LEGEND-ABBREVIATION

P.O.P	PRIMARY OVERCURRENT PROTECTION
DPST	DOUBLE POLE SINGLE THROW
SPST	SINGLE POLE SINGLE THROW
DS/RM	DATA STATION/RAMP METER
CCTV	CLOSED CIRCUIT TELEVISION
VMS	VARIABLE MESSAGE SIGN
HAR	HIGHWAY ADVISORY RADIO
SCEV	STEEL CONTROLLED ENVIRONMENT VAULT
PTR	PERMANENT TRAFFIC RECORDER

KEY

1. PRIMARY POWER.
2. MAIN BREAKER.
3. SECONDARY BRANCH BREAKERS.
4. TRANSFORMER.
5. NEUTRAL BUSS.
6. GROUND BUSS.
7. RECEPTACLE GROUNDED (20 AMP, 120 VOLTS).
8. PERMANENTLY AFFIXED COMPARTMENT SEPARATOR.
9. SEE FOUNDATION DETAILS, SHEET ITDXX AND ITDXX.
10. ENCLOSED WIREWAY FOR 120V CIRCUITS.

GENERAL NOTES

1. 3 KVA, 5KVA, 10 KVA TRANSFORMERS SHALL BE 48" HIGH X 24" WIDE X 18" DEEP.
2. THE SECONDARY BRANCH BREAKERS SHALL BE BOLT IN TYPE, MOUNTED ON COPPER BUSSWORK RATED AT 100 AMPS.
3. ALL CIRCUIT BREAKERS INSTALLED SHALL BE PERMANENTLY MARKED WITH APPLICABLE CIRCUIT NAME.
4. THE DEAD FRONT SHALL BE FABRICATED IN TWO PARTS, ONE FOR EACH COMPARTMENT.
5. THE DOOR HINGE SHALL BE MOUNTED ON THE LEFT SIDE.
6. BOLT PATTERN IS PROVIDED BY CABINET MANUFACTURER. ALL ANCHOR BOLTS SHALL BE HOT DIPPED GALVANIZED. ALTERNATE: STAINLESS STEEL CINCH BOLTS PER MANUFACTURE'S RECOMMENDATION. BOLT SHALL EXTEND A MIN. 1.5 INCHES ABOVE THE CONCRETE PAD.
7. SEE SECTION 9-29.24 OF THE STANDARD SPECIFICATIONS FOR ADDITIONAL REQUIREMENT.
8. TRANSFORMER VOLTAGE AND KVA REQUIREMENTS ARE AS SHOWN IN THE PLANS AND SPECIAL PROVISIONS.
9. SEE ITS BREAKER SCHEDULE FOR SIZE AND QUANTITY OF BREAKERS.
10. THE 25KVA TRANSFORMER CABINET SIZE SHALL BE 60" X 32" X 30" WITH DOORS ON BOTH SIDE AND MANUAL TRANSFORMER SWITCH ON BACK SIDE.

DESIGNED BY				
ENTERED BY				
CHECKED BY				
PROJ. ENGR.				
REGIONAL ADM.		6/1/00		
	DATE	DATE	REVISION	BY

REGION NO.	STATE	FED.AID PROJ.NO.
10	WASH	
JOB NUMBER		
CONTRACT NO.		

ENVIRONMENTAL AND ENGINEERING SERVICE CENTER

Washington State Department of Transportation

ITS MASTER DETAILS ENGLISH

TRANSFORMER DETAILS

TRAN1

SHEET 12.0E OF SHEETS

PLOT2C:\AAW08KM\KJ2004nd Nickel Stage 1 - ITS Master Details\Transformer.

TRANSFORMER BREAKER SCHEDULE

T-300	POWER FROM		SAD 2141			CKT#5
BREAKER NO.	CIRCUIT VOLTAGE	BREAKER RATING	BREAKER TYPE	KVA LOAD	AMP LOAD	CIRCUIT NAME
PRIMARY						
A	480	25 A	D.P.S.T	15	31.2	MAIN BREAKER
SECONDARY						
1	120	30 A	S.P.S.T.	3	25	ES-300
2	120	40 A	S.P.S.T.	7.5	62.5	VMS-300
3	120	20 A	S.P.S.T.	2	16.7	HARS-300
4						
5	-----	-----				
6	-----	-----				
TRANSFORMER RATED LOAD			15 KVA			
TRANSFORMER ACTUAL LOAD			12.5 KVA			

T-305+B93	POWER FROM		B-SAD 2137			CKT#D6
BREAKER NO.	CIRCUIT VOLTAGE	BREAKER RATING	BREAKER TYPE	KVA LOAD	AMP LOAD	CIRCUIT NAME
PRIMARY						
A	480	20 A	D.P.S.T	7.5	15.6	MAIN BREAKER
SECONDARY						
1	120	30 A	S.P.S.T.	3	25	ES-304
2	120	30 A	S.P.S.T.	3	25	ES-305
3	-----	-----				
4	-----	-----				
5	-----	-----				
6	-----	-----				
TRANSFORMER RATED LOAD			7.5 KVA			
TRANSFORMER ACTUAL LOAD			6 KVA			

T-301	POWER FROM		SAD 2141			CKT#5
BREAKER NO.	CIRCUIT VOLTAGE	BREAKER RATING	BREAKER TYPE	KVA LOAD	AMP LOAD	CIRCUIT NAME
PRIMARY						
A	480	20 A	D.P.S.T	7.5	15.6	MAIN BREAKER
SECONDARY						
1	120	30 A	S.P.S.T.	3	25	ES-301
2	120	20 A	S.P.S.T.	2	16.7	CCTV-301
3						
4						
5	-----	-----				
6	-----	-----				
TRANSFORMER RATED LOAD			7.5 KVA			
TRANSFORMER ACTUAL LOAD			5 KVA			

T-305A	POWER FROM		SAD 2136			CKT#A8
BREAKER NO.	CIRCUIT VOLTAGE	BREAKER RATING	BREAKER TYPE	KVA LOAD	AMP LOAD	CIRCUIT NAME
PRIMARY						
A	480	60A	D.P.S.T	25	52	MAIN BREAKER
SECONDARY						
1	240	100A	D.P.S.T	20	84	AUBRUN HUB
2	120	20 A	S.P.S.T.	2	16.7	HART-305D
3	120	20 A	S.P.S.T.	2	16.7	GFI
4	-----	-----				
5	-----	-----				
6	-----	-----				
TRANSFORMER RATED LOAD			25 KVA			
TRANSFORMER ACTUAL LOAD			24 KVA			

T-303	POWER FROM		B-SAD 2137			CKT#B8
BREAKER NO.	CIRCUIT VOLTAGE	BREAKER RATING	BREAKER TYPE	KVA LOAD	AMP LOAD	CIRCUIT NAME
PRIMARY						
A	480	20 A	D.P.S.T	7.5	15.6	MAIN BREAKER
SECONDARY						
1	120	30 A	S.P.S.T.	3	25	ES-303
2	120	20 A	S.P.S.T.	2	16.7	CCTV-303
3	-----	-----				
4	-----	-----				
5	-----	-----				
6	-----	-----				
TRANSFORMER RATED LOAD			7.5 KVA			
TRANSFORMER ACTUAL LOAD			5 KVA			

T-306	POWER FROM		SAD 2166			CKT#D6
BREAKER NO.	CIRCUIT VOLTAGE	BREAKER RATING	BREAKER TYPE	KVA LOAD	AMP LOAD	CIRCUIT NAME
PRIMARY						
A	480	20 A	D.P.S.T	7.5	15.6	MAIN BREAKER
SECONDARY						
1	120	30 A	S.P.S.T.	3	25	ES-306
2	120	20 A	S.P.S.T.	2	16.7	CCTV-306
3	-----	-----				
4	-----	-----				
5	-----	-----				
6	-----	-----				
TRANSFORMER RATED LOAD			7.5 KVA			
TRANSFORMER ACTUAL LOAD			5 KVA			

T-304	POWER FROM		SAD 2136			CKT#A7
BREAKER NO.	CIRCUIT VOLTAGE	BREAKER RATING	BREAKER TYPE	KVA LOAD	AMP LOAD	CIRCUIT NAME
PRIMARY						
A	480	20 A	D.P.S.T	5	10.4	MAIN BREAKER
SECONDARY						
1	120	20 A	S.P.S.T.	2	16.7	CCTV-304
2	-----	-----				
3	-----	-----				
4	-----	-----				
5	-----	-----				
6	-----	-----				
TRANSFORMER RATED LOAD			5 KVA			
TRANSFORMER ACTUAL LOAD			2 KVA			

T-309	POWER FROM		SAD 1931			CKT#F
BREAKER NO.	CIRCUIT VOLTAGE	BREAKER RATING	BREAKER TYPE	KVA LOAD	AMP LOAD	CIRCUIT NAME
PRIMARY						
A	480	20 A	D.P.S.T	5	10.4	MAIN BREAKER
SECONDARY						
1	120	30 A	S.P.S.T.	3	25	ES-309
2	-----	-----				
3	-----	-----				
4	-----	-----				
5	-----	-----				
6	-----	-----				
TRANSFORMER RATED LOAD			5 KVA			
TRANSFORMER ACTUAL LOAD			3 KVA			

LEGEND-ABBREVIATION

P.O.P	PRIMARY OVERCURRENT PROTECTION
DPST	DOUBLE POLE SINGLE THROW
SPST	SINGLE POLE SINGLE THROW
DS/RM	DATA STATION/RAMP METER
CCTV	CLOSED CIRCUIT TELEVISION
VMS	VARIABLE MESSAGE SIGN
HAR	HIGHWAY ADVISORY RADIO
SCEV	STEEL CONTROLLED ENVIRONMENT VAULT
PTR	PERMANENT TRAFFIC RECORDER

DESIGNED BY				
ENTERED BY				
CHECKED BY				
PROJ. ENGR.				
REGIONAL ADM.				
	DATE	DATE	REVISION	BY

REGION NO.	STATE	FED.AID PROJ.NO.
10	WASH	
JOB NUMBER		
CONTRACT NO.		

ENVIRONMENTAL AND ENGINEERING SERVICE CENTER

Washington State Department of Transportation

MASTER DETAILS

TRANSFORMER BREAKER SCHEDULE

TRAN2

SHEET 12.1E OF SHEETS

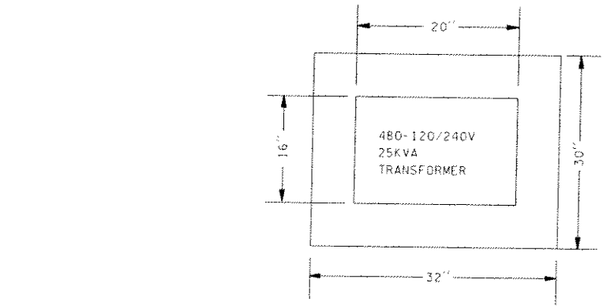

PLAN VIEW

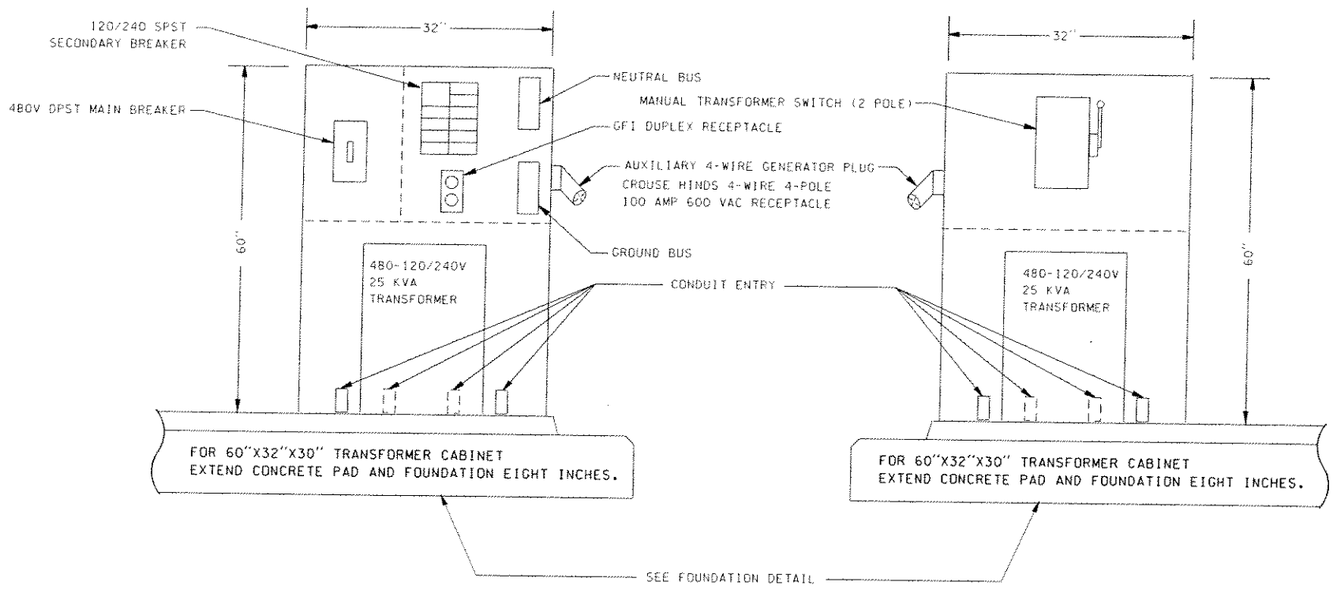

FRONT VIEW

BACK VIEW

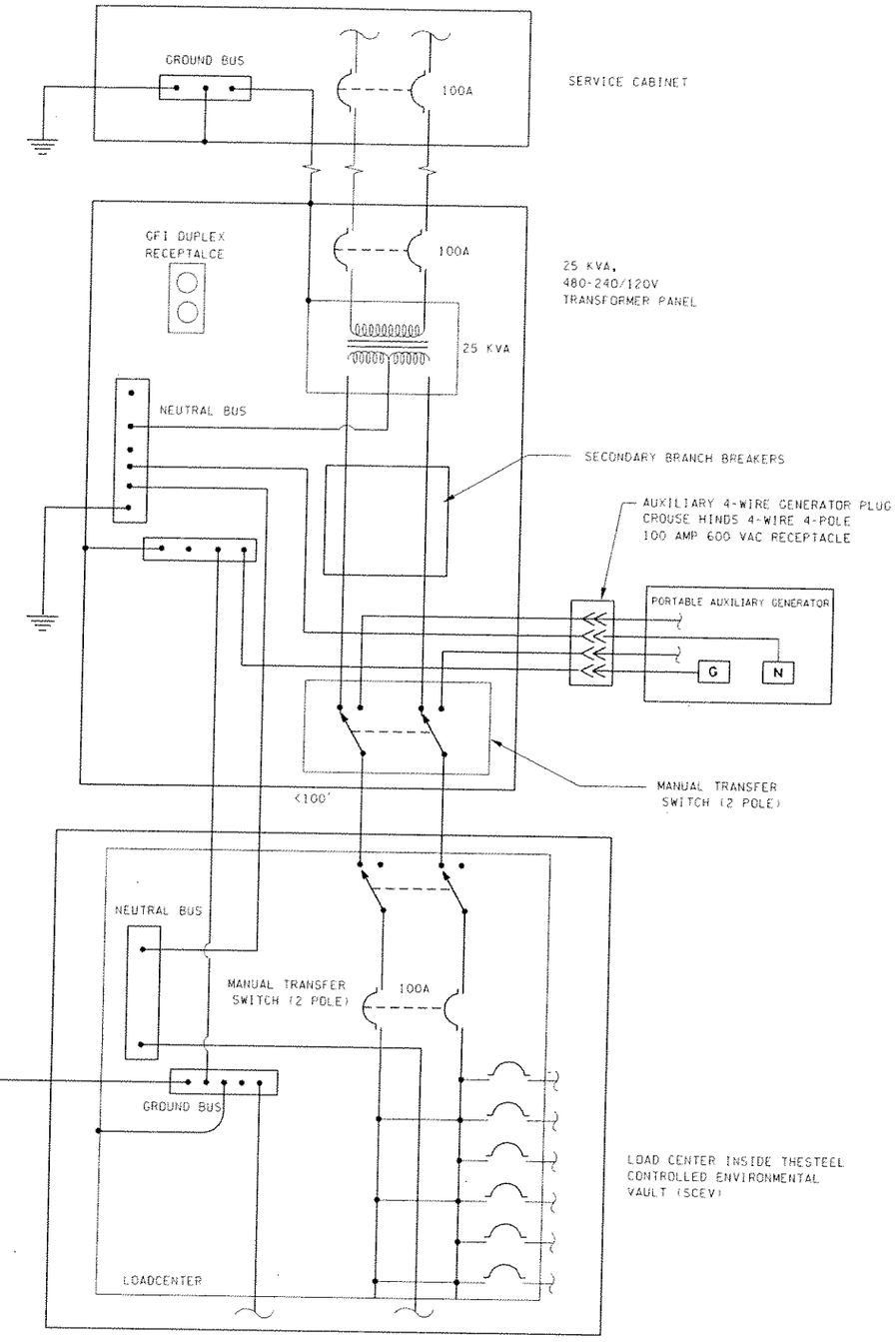

NOTE:
FOR GENERAL NOTES SEE SHEET SCD13.

SCEV TRANSFORMER

DESIGNED BY					REGION NO.	STATE	FED.AID PROJ.NO.	ENVIRONMENTAL AND ENGINEERING SERVICE CENTER	Washington State Department of Transportation
ENTERED BY					10	WASH			
CHECKED BY					JOB NUMBER				
PROJ. ENGR.									
REGIONAL ADM.					CONTRACT NO.				
	DATE	DATE	REVISION	BY					

ITS MASTER DETAILS ENGLISH

SCEV TRANSFORMER

TRAN3

SHEET 12.2E OF SHEETS

PLOT3C:\AAW08\K1K1200and Nickel Stage 1 - ITS Master Details\Trsdmsofdsmer.

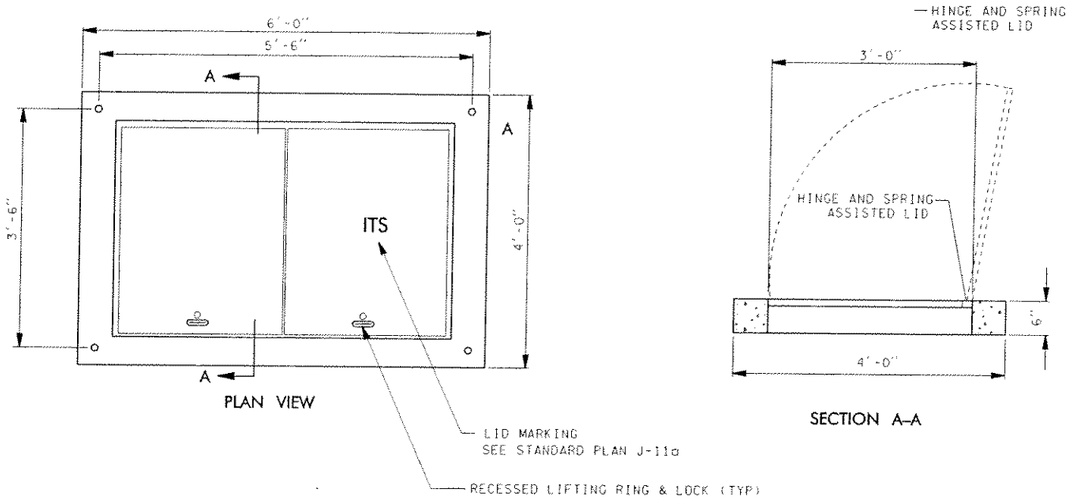

PLAN VIEW

SECTION A-A

CABLE VAULT LID DETAIL

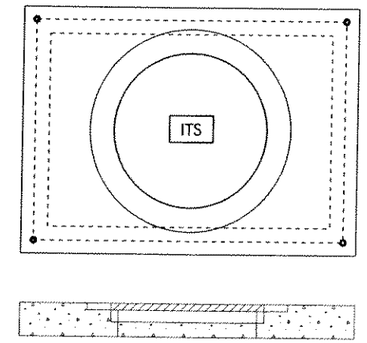

PULL BOX AND CABLE VAULT COVER WITH H-35 TRAFFIC BEARING PLACED IN THE PAVED SHOULDER

NOTES:
1. TYPE H-35.
2. PULL BOX WITH 21" AND CABLE VAULT WITH 36" CAST IRON RING AND COVER.
3. LOCKABLE LID.
4. INSTALL RISER AS REQUIRED.
5. 5/8" DIA. INSERT AT EACH CORNER.

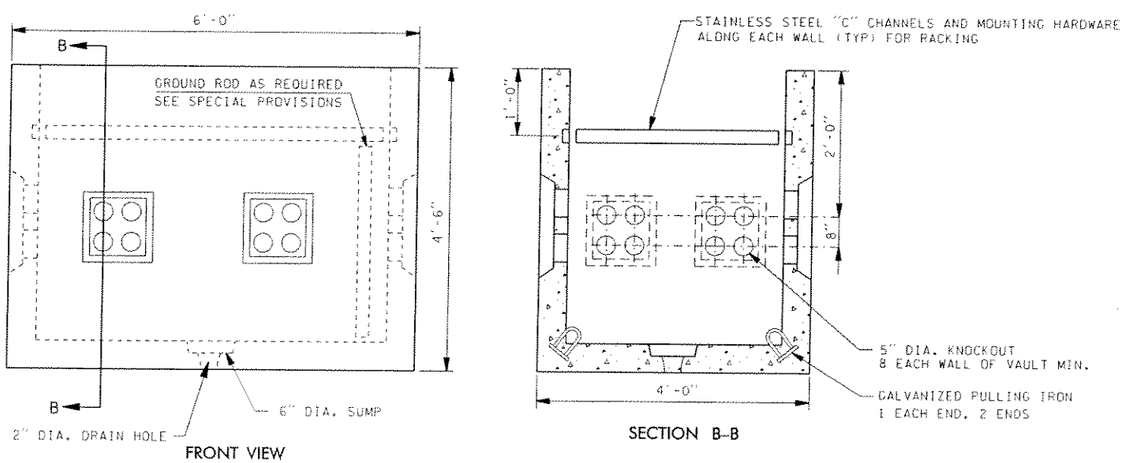

FRONT VIEW

SECTION B-B

CABLE VAULT DETAIL

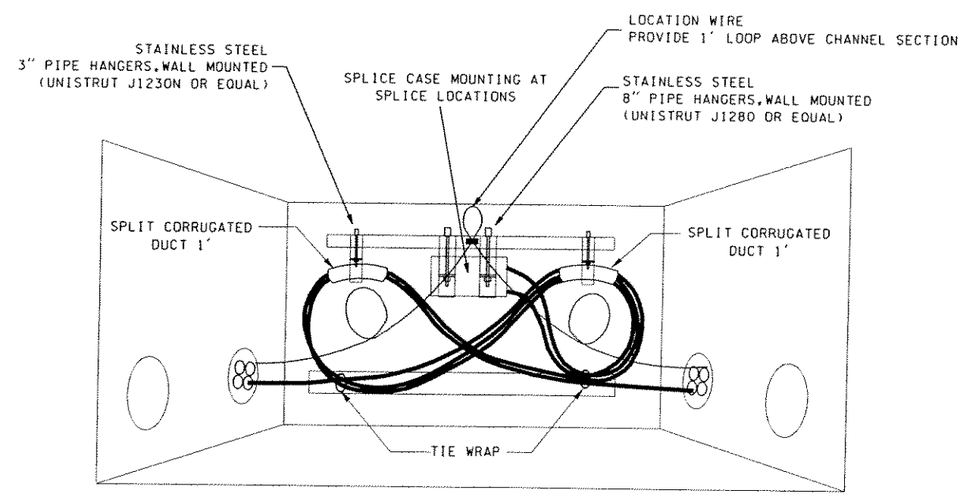

CABLE VAULT CABLE RACKING PLAN

DESIGNED BY				
ENTERED BY				
CHECKED BY				
PROJ. ENGR.				
REGIONAL ADM.		5/2/01		
	DATE	DATE	REVISION	BY

REGION NO.	STATE	FED.AID PROJ.NO.
10	WASH	
JOB NUMBER		
CONTRACT NO.		

ENVIRONMENTAL AND ENGINEERING SERVICE CENTER

Washington State Department of Transportation

ITS MASTER DETAILS ENGLISH

CABLE VAULT DETAILS

CV1

SHEET 4.0E OF SHEETS

PLOT1 C:\Oakland Nickel Stage 1 - ITS Master Details\Vaults.dgn

PLOT2 C:\ADBWdr4\2004land Nickel Stage 1 - ITS Master Details\Yoands.dgn

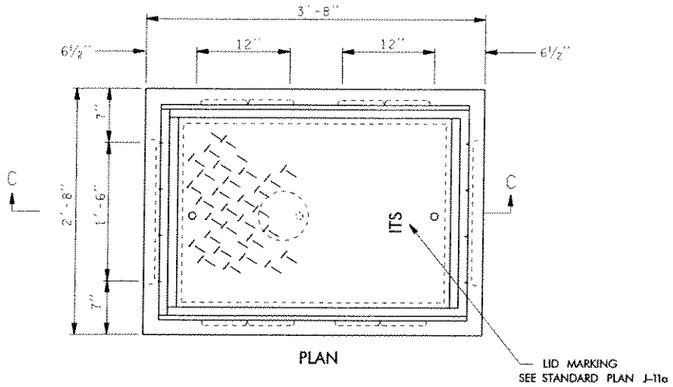

PLAN

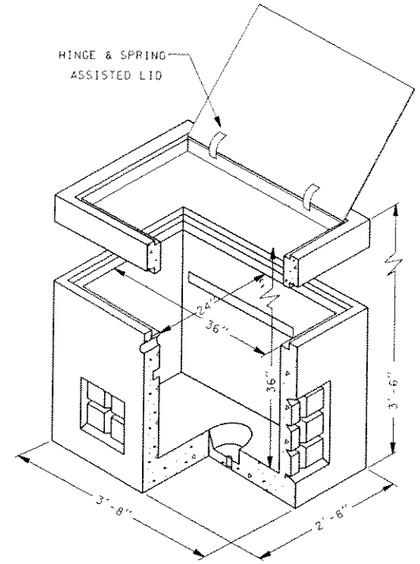

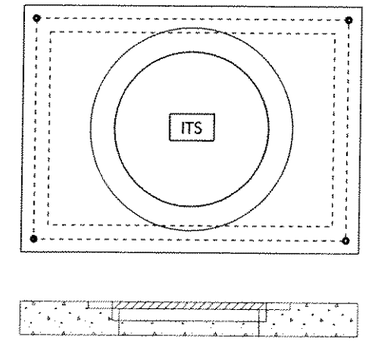

PULL BOX AND CABLE VAULT COVER WITH H-35 TRAFFIC BEARING
PLACED IN THE PAVED SHOULDER

NOTES:
1. TYPE H-35.
2. PULL BOX WITH 21" AND CABLE VAULT WITH 36" CAST IRON RING AND COVER.
3. LOCKABLE LID.
4. INSTALL RISER AS REQUIRED.
5. ⅝" DIA. INSERT AT EACH CORNER.

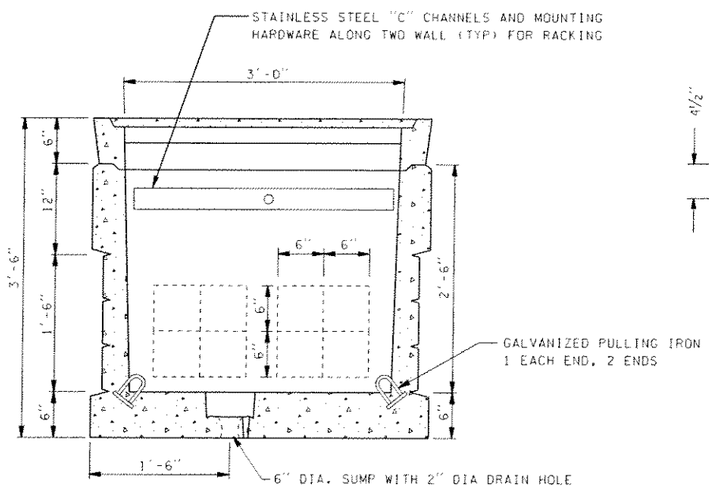

SECTION C-C

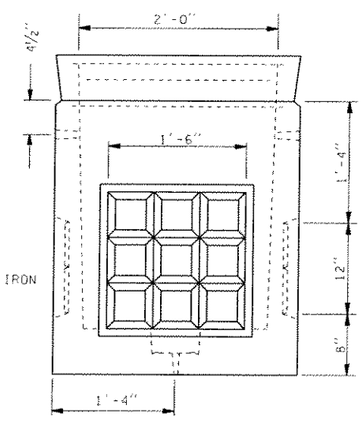

SIDE

PULL BOX DETAIL

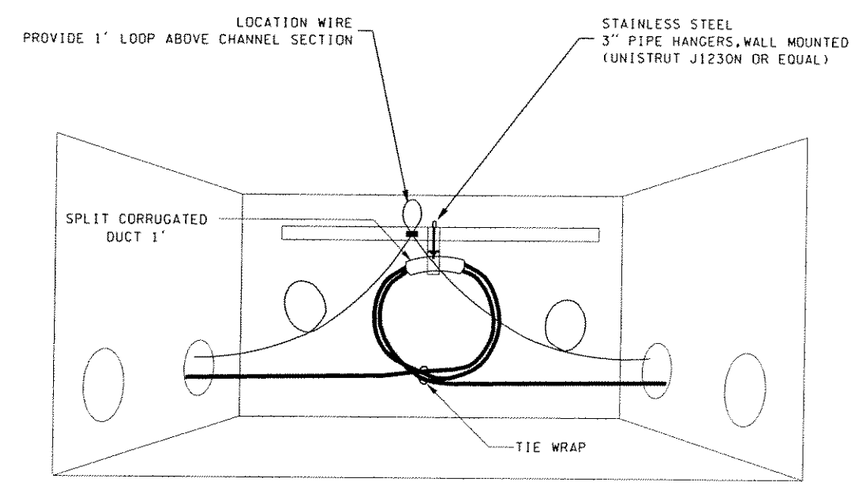

COIL CABLE BY USING FIGURE 8 FOLDED IN THE MIDDLE TO MAKE A LOOP.

PULL BOX RACKING PLAN

DESIGNED BY					REGION NO. 10	STATE WASH	FED.AID PROJ.NO.	ENVIRONMENTAL AND ENGINEERING SERVICE CENTER
ENTERED BY					JOB NUMBER			
CHECKED BY								
PROJ. ENGR.					CONTRACT NO.			
REGIONAL ADM.		5/2/01						
	DATE	DATE	REVISION	BY				

Washington State Department of Transportation

MASTER DETAILS

ITS MASTER DETAILS ENGLISH

PB1

SHEET 4.1E OF SHEETS

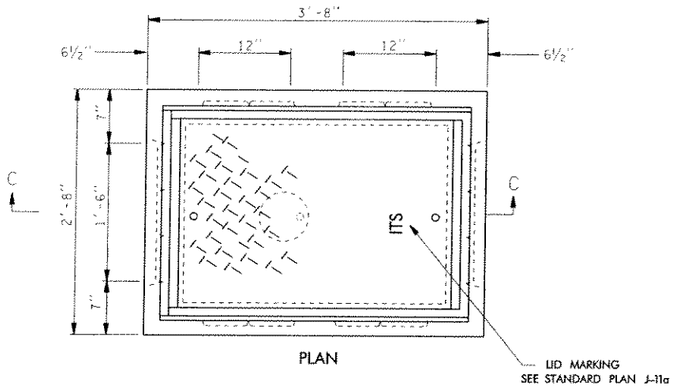

PLAN

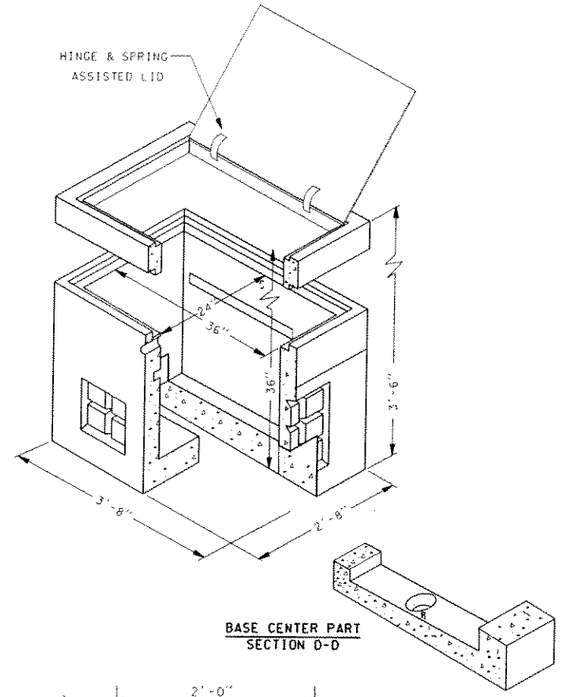

BASE CENTER PART
SECTION D-D

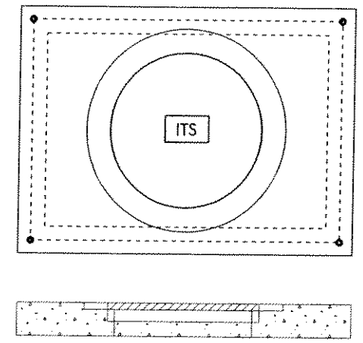

PULL BOX AND CABLE VAULT COVER WITH H-25 TRAFFIC BEARING
PLACED IN THE PAVED SHOULDER

NOTES:
1. TYPE H-25.
2. PULL BOX WITH 21" AND CABLE VAULT WITH 36" CAST IRON RING AND COVER.
3. LOCKABLE LID.
4. INSTALL RISER AS REQUIRED.
5. ⅝" DIA. INSERT AT EACH CORNER.

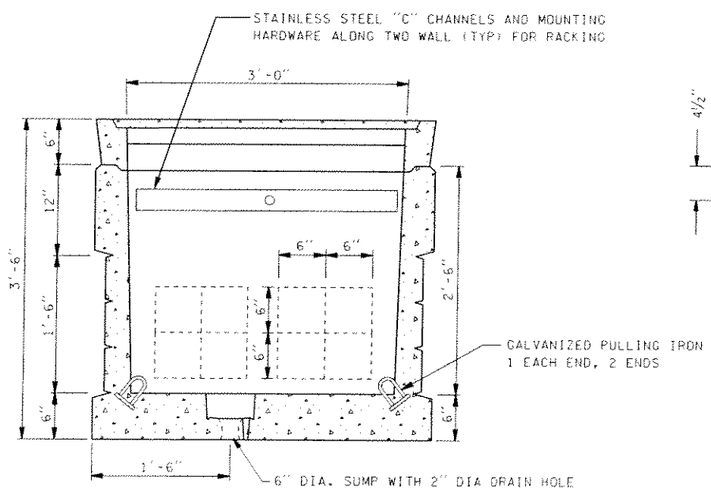

SECTION C-C

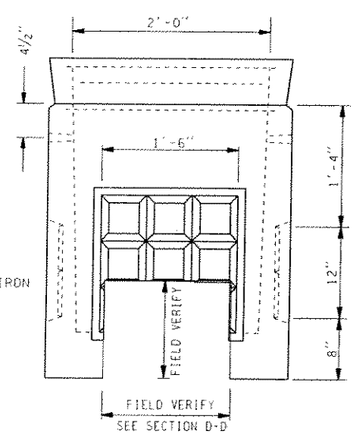

SIDE

END VIEW

PULL BOX DETAIL

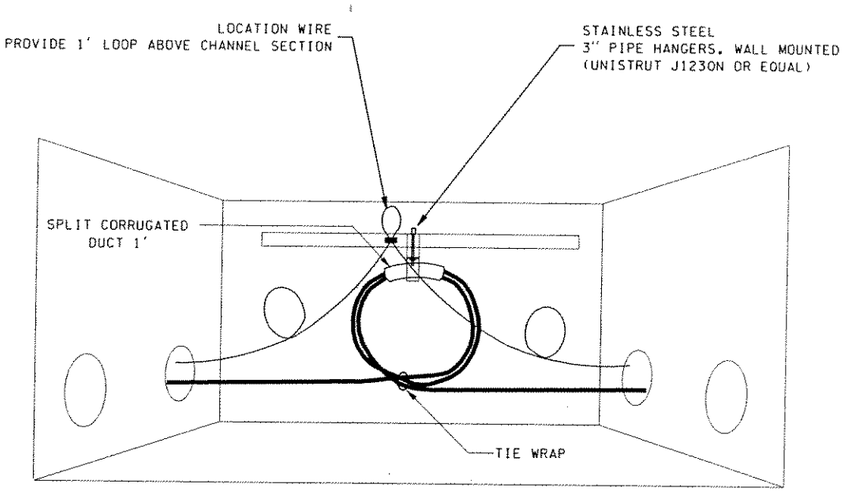

COIL CABLE BY USING FIGURE 8 FOLDED IN THE MIDDLE TO MAKE A LOOP.

PULL BOX RACKING PLAN

FILE NAME	C:\AAWork\Kirkland NickelStage 1- ITS Master Details\Vaults.dgn						
TIME	08:05:02 AM						
DATE	09/14/2004						
DESIGNED BY							
ENTERED BY							
CHECKED BY							
PROJ. ENGR.							
REGIONAL ADM.		REVISION	DATE	BY			

REGION NO.	STATE	FED.AID PROJ.NO.
10	WASH	
JOB NUMBER		
CONTRACT NO.		LOCATION NO.

P.E. STAMP BOX DATE

P.E. STAMP BOX DATE

Washington State
Department of Transportation

PLOT3

SHEET
OF
SHEETS

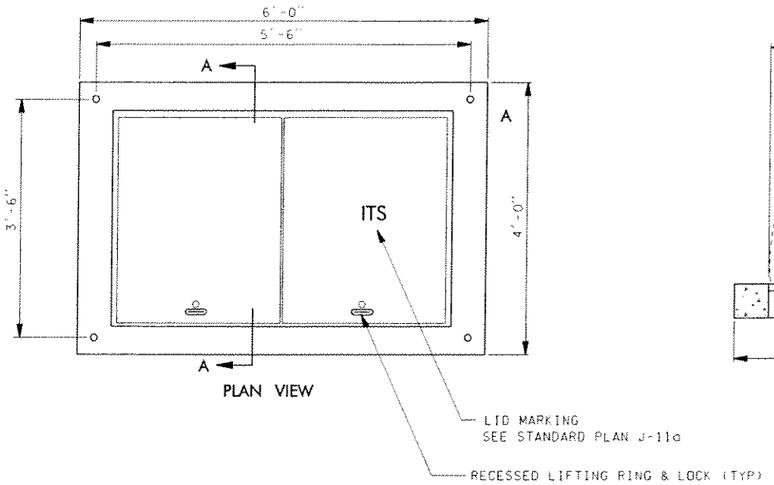

PLAN VIEW

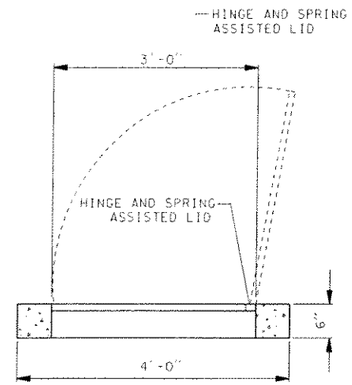

SECTION A–A

CABLE VAULT LID DETAIL

NOTES:
1. TYPE H-35.
2. TYPE 444 CABLE VAULT
   WITH 24" CAST IRON RING AND COVER.
3. LOCKABLE LID.
4. INSTALL RISER AS REQUIRED.
5. 5/8" DIA. INSERT AT EACH CORNER.

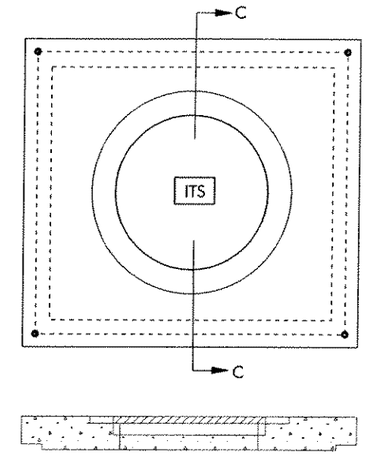

CABLE VAULT COVER WITH H-35 TRAFFIC BEARING
PLACED IN THE PAVED SHOULDER

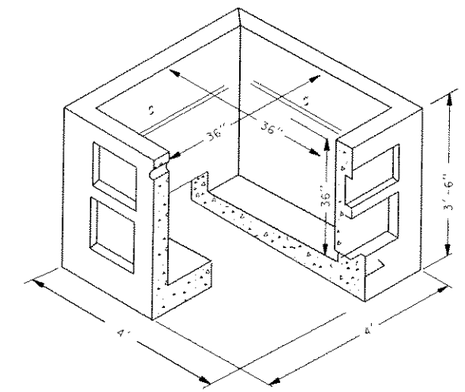

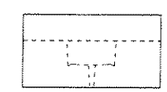

END VIEW

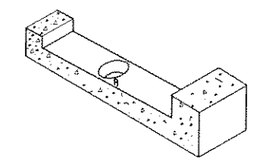

BASE CENTER PART
SECTION D-D

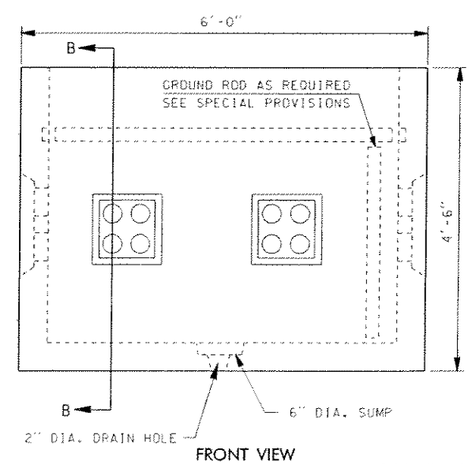

FRONT VIEW

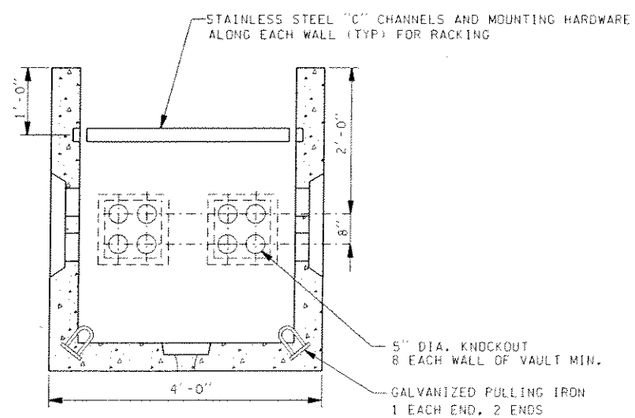

SECTION B–B

CABLE VAULT DETAIL

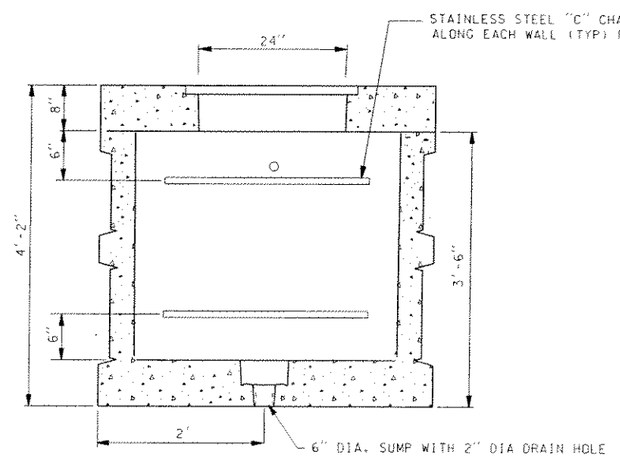

SECTION C–C

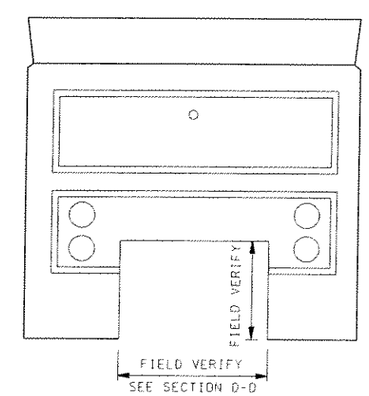

END VIEW

444 CABLE VAULT DETAIL

FILE NAME	C:\AAWork\Kirkland NickelStage I- ITS Master Details\Vaults.dgn						
TIME	08:05:05 AM				REGION NO. / STATE	FED.AID PROJ.NO.	
DATE	09/14/2004				10 / WASH		
DESIGNED BY					JOB NUMBER		
ENTERED BY							
CHECKED BY					CONTRACT NO.	LOCATION NO.	
PROJ. ENGR.							
REGIONAL ADM.		REVISION	DATE	BY			

P.E. STAMP BOX DATE

P.E. STAMP BOX DATE

Washington State
Department of Transportation

PLOT4

SHEET
OF
SHEETS

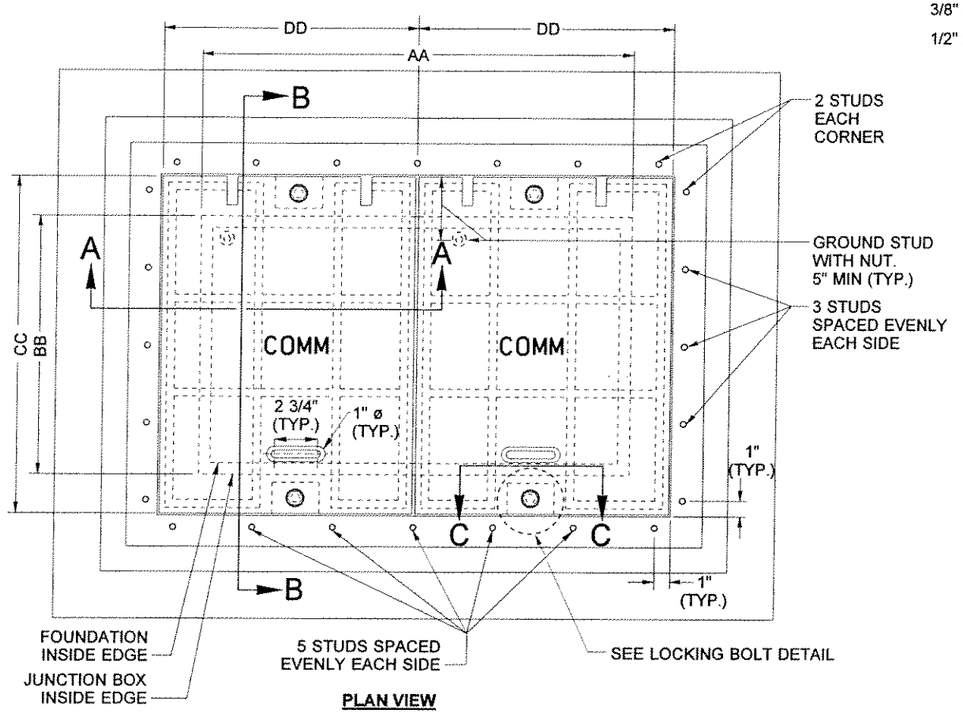

PLAN VIEW

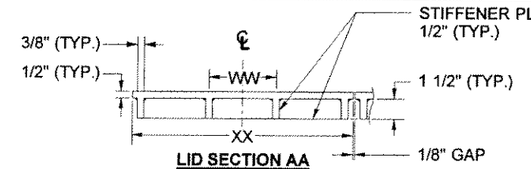

LID SECTION AA

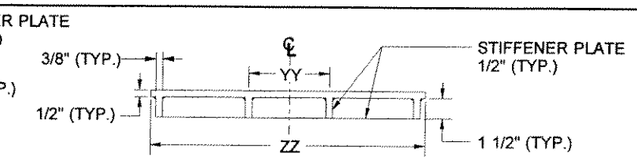

LID SECTION BB

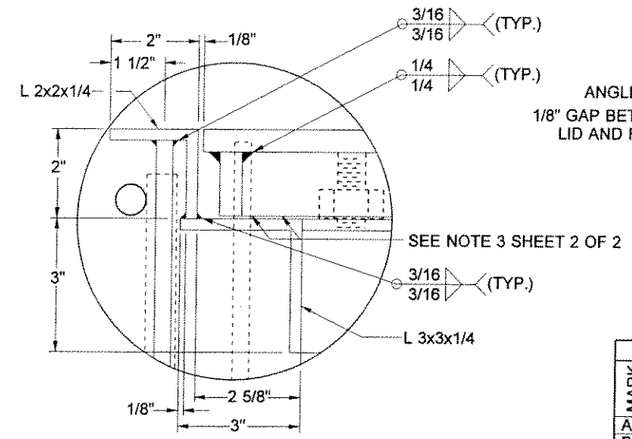

DETAIL A

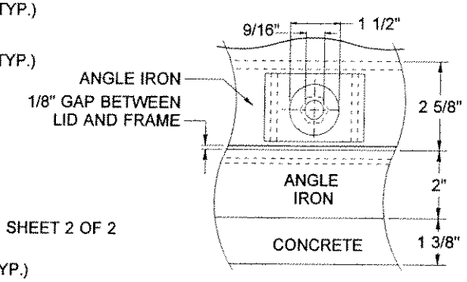

LOCKING BOLT DETAIL

JUNCTION BOX DIMENSION TABLE				
MARK	ITEM	BOX TYPE		
		4	5	6
AA	J. BOX INSIDE LENGTH	19"	28"	36"
BB	J. BOX INSIDE WIDTH	14"	17"	24"
CC	LID LENGTH (EACH SIDE)	19"	22"	29"
DD	LID WIDTH (EACH SIDE)	11 15/16"	16 7/16"	20 7/16"
WW	STIFFENER SPACING	4"	5 1/2"	6 3/4"
XX	STIFFENER LENGTH	11 15/16"	16 7/16"	20 7/16"
YY	STIFFENER SPACING	6"	7"	9 1/2"
ZZ	STIFFENER LENGTH	19"	22"	29"
CAPACITY - CONDUIT DIAMETER		6"	12"	24"

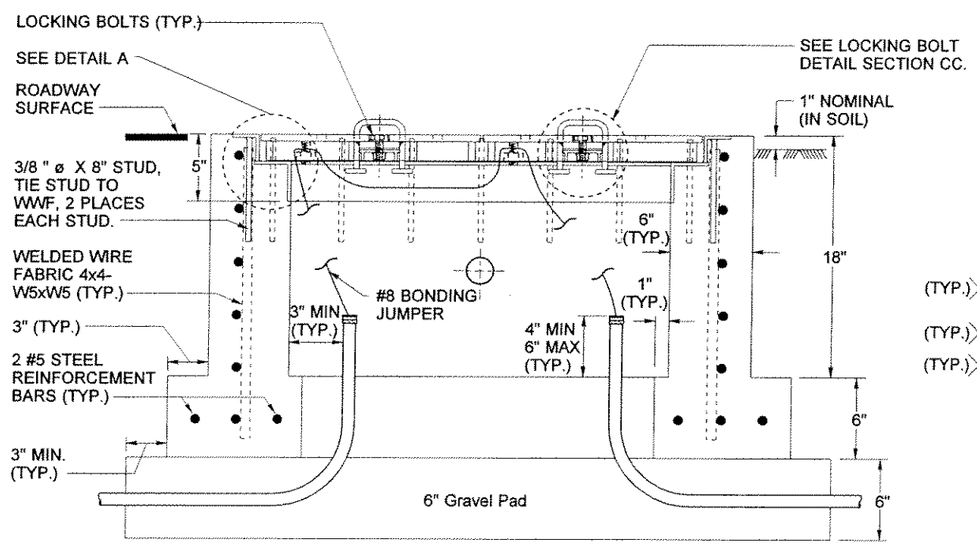

ELEVATION VIEW

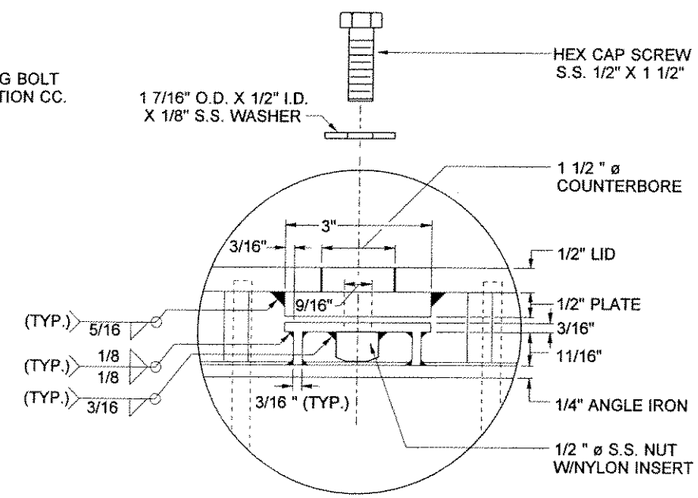

LOCKING BOLT DETAIL SECTION CC

TRAFFIC BEARING TYPE 4, 5 AND 6 JUNCTION BOX (DUAL LID)
NOT TO SCALE

FILE NAME	C:\AAWork\Kirkland NickelStage I- ITS Master Details\Vaults.dgn						
TIME	08:05:09 AM			REGION NO.	STATE	FED.AID PROJ.NO.	
DATE	09/14/2004			10	WASH		
DESIGNED BY				JOB NUMBER			
ENTERED BY							
CHECKED BY				CONTRACT NO.		LOCATION NO.	
PROJ. ENGR.							
REGIONAL ADM.		REVISION	DATE	BY			

P.E. STAMP BOX DATE

P.E. STAMP BOX DATE

Washington State Department of Transportation

TRAFFIC BEARING JUNCTION BOX

ENGLISH

PLOTS

6.40E

SHEET OF SHEETS

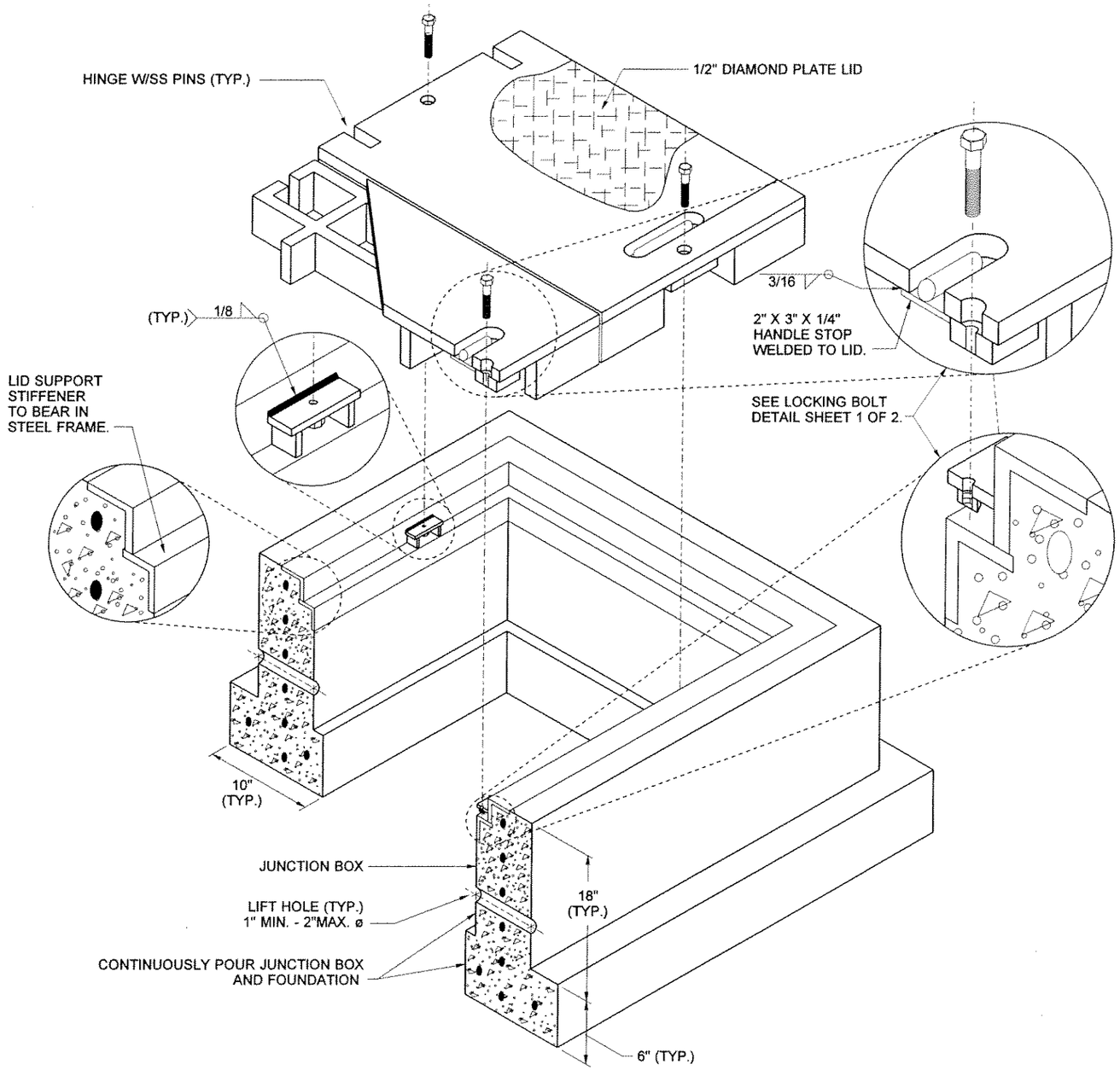

LEGEND DETAIL
MARK L

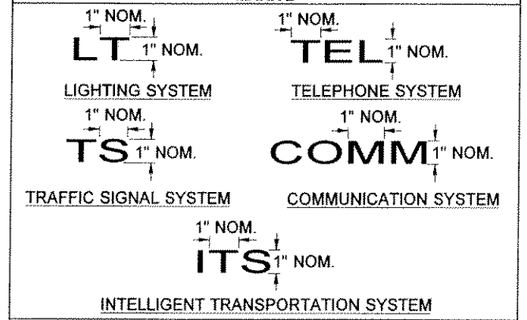

Form letters with 1/8" weld bead.
Grind off diamond pattern before forming letters.

NOTES

1. ALL BOX DIMENSIONS ARE MINIMUM. EXACT CONFIGURATIONS VARY AMONG DIFFERENT MANUFACTURERS.
2. THE NOTED LID THICKNESSES ARE OVERALL MINIMUMS. THE DIAMOND PATTERN FOR TYPE 4, 5 AND 6 BOXES SHALL BE 3/32" MINIMUM THICK.
3. LID STIFFENER PLATES SHALL BEAR ON FRAME. MILL TO BEAR SEAT AND PERIMETER BAR FOR FULL EVEN CONTACT AROUND PERIMETER AFTER FABRICATION OF FRAME AND LID. LID AND FRAME UNITS WITH UNEVEN BEARING WILL BE REJECTED.
4. A 1/4" NC X 3/4" S.S. GROUND STUD WITH S.S. NUT SHALL BE WELDED TO THE BOTTOM SIDE OF EACH LID.
5. SEE STANDARD SPECIFICATIONS 9-29.2.
6. THE HINGES SHALL ALLOW THE LIDS TO OPEN 180°.
7. ALL CONCRETE SHALL BE CLASS 4000.
8. A 1% TOLERANCE IS ALLOWED FOR ALL DIMENSIONS.
9. THE INSTALLED LID AND FRAME SHALL FIT WITH FULL EVEN CONTACT AROUND THE PERIMETER AFTER INSTALLATION. CARE SHALL BE TAKEN TO PREVENT ANY DEBRIS ACCUMULATION ON THE CONTACT SURFACES.

TRAFFIC BEARING TYPE 4, 5 AND 6 JUNCTION BOX (DUAL LID)
NOT TO SCALE

FILE NAME	C:\AAWork\Kirkland NickelStage I- ITS Master Details\Vaults.dgn								PLOT6
TIME	08:05:14 AM				REGION NO. / STATE	FED.AID PROJ.NO.		Washington State Department of Transportation	TRAFFIC BEARING JUNCTION BOX	6.41E
DATE	09/14/2004				10 / WASH					SHEET
DESIGNED BY					JOB NUMBER					OF
ENTERED BY										SHEETS
CHECKED BY					CONTRACT NO.	LOCATION NO.				
PROJ. ENGR.										
REGIONAL ADM.		REVISION	DATE	BY			P.E. STAMP BOX DATE	P.E. STAMP BOX DATE	ENGLISH	

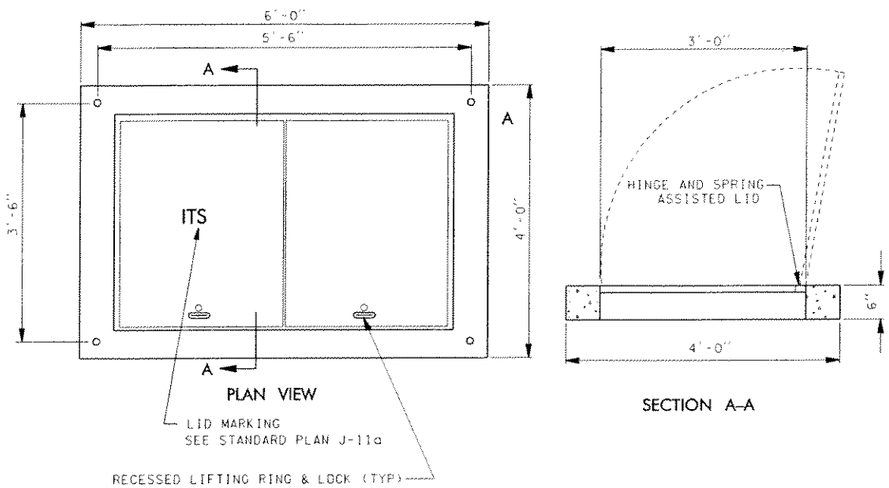

CABLE VAULT LID DETAIL

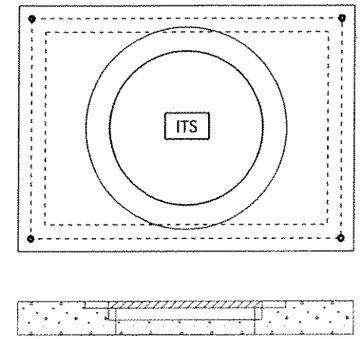

NOTES:
1. TYPE H-35.
2. CABLE VAULT WITH 36" CAST IRON RING AND COVER.
3. LOCKABLE LID.
4. INSTALL RISER AS REQUIRED.
5. 5/8" DIA. INSERT AT EACH CORNER.

CABLE VAULT COVER WITH H-35 TRAFFIC BEARING PLACED IN THE PAVED SHOULDER

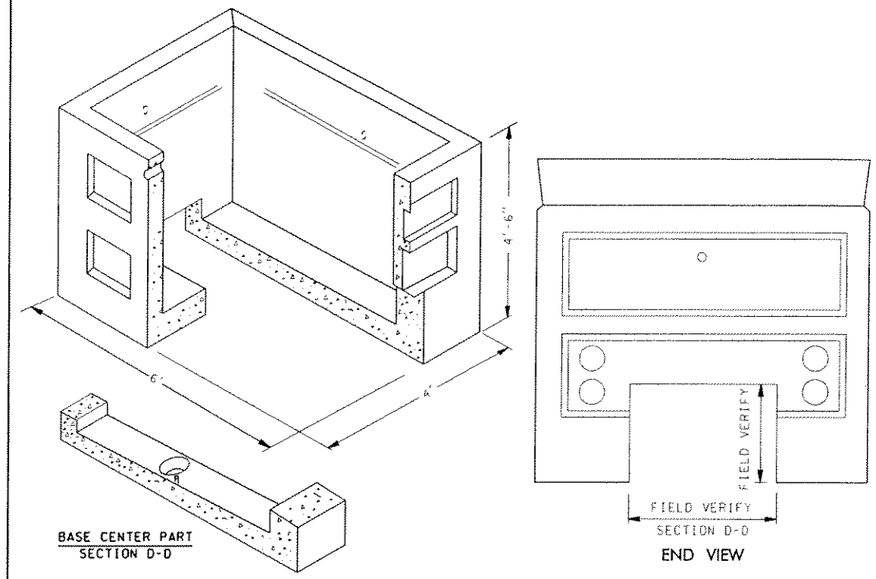

SPLIT CABLE VAULT

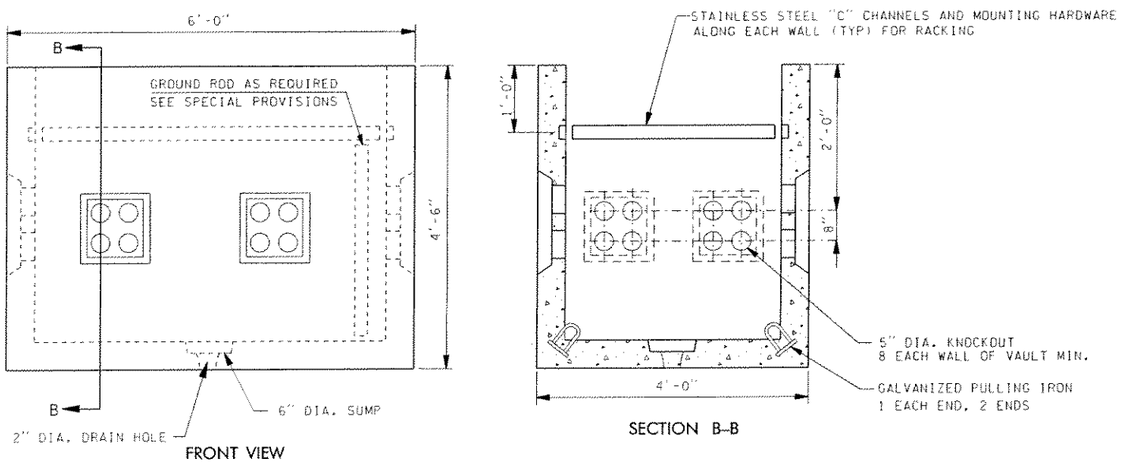

CABLE VAULT DETAIL

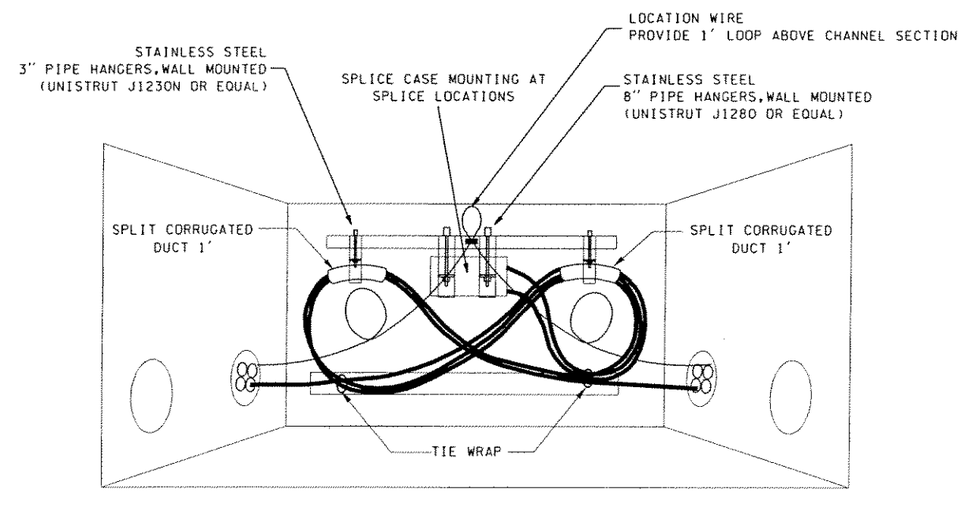

CABLE VAULT CABLE RACKING PLAN

FILE NAME	C:\AAWork\Kirkland NickelStage I- ITS Master Details\Vaults.dgn			REGION NO. 10	STATE WASH	FED.AID PROJ.NO.
TIME	08:05:20 AM			JOB NUMBER		
DATE	09/14/2004			CONTRACT NO.		LOCATION NO.
DESIGNED BY						
ENTERED BY						
CHECKED BY						
PROJ. ENGR.						
REGIONAL ADM.		REVISION	DATE	BY		

P.E. STAMP BOX DATE

P.E. STAMP BOX DATE

Washington State Department of Transportation

PLOT7

SHEET OF SHEETS

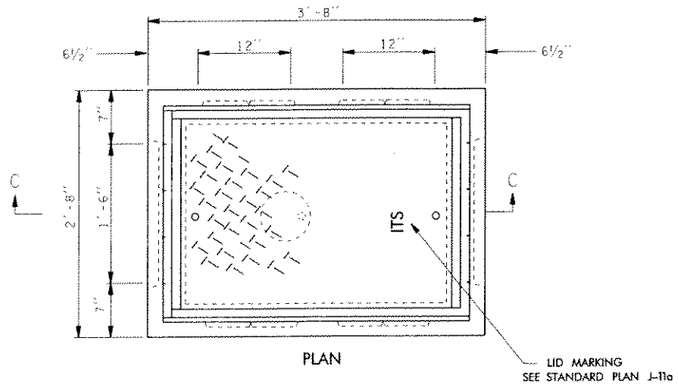

PLAN

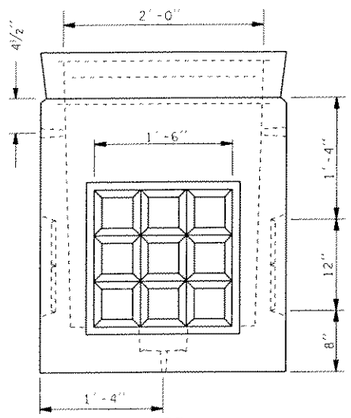

SIDE

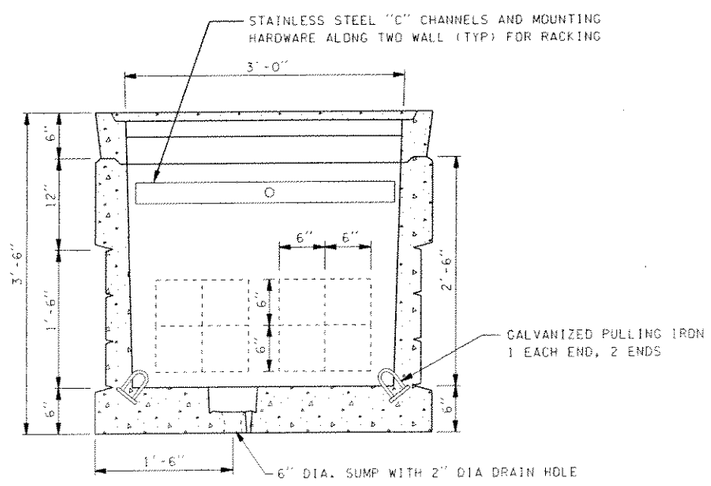

SECTION C-C

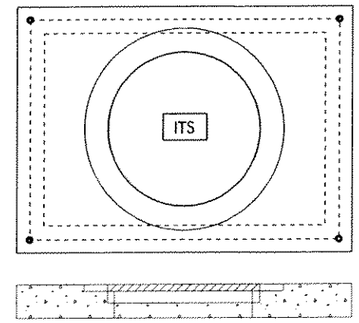

NOTES:
1. TYPE H-25.
2. PULL BOX WITH 21" WITH 36" CAST IRON RING AND COVER.
3. LOCKABLE LID.
4. INSTALL RISER AS REQUIRED.
5. ⅝" DIA. INSERT AT EACH CORNER.

PULL BOX COVER WITH H-25 TRAFFIC BEARING PLACED IN THE PAVED SHOULDER

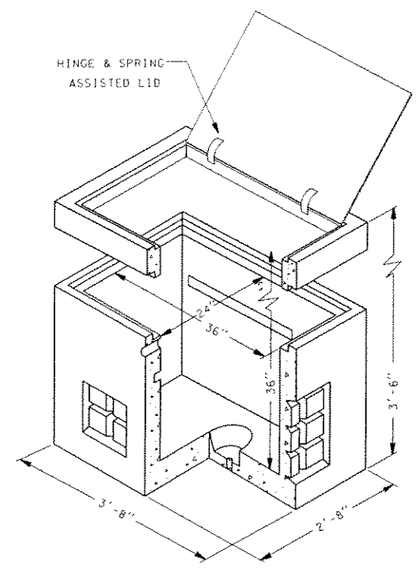

PULL BOX DETAIL

NOT TO SCALE

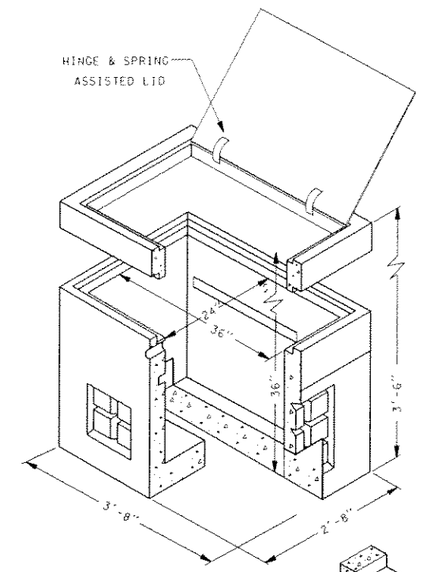

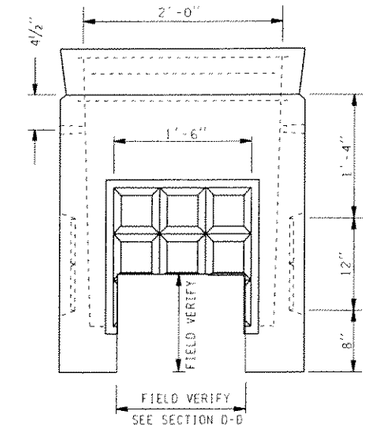

SIDE

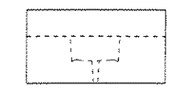

END VIEW

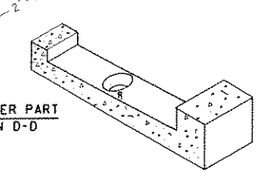

BASE CENTER PART
SECTION D-D

SPLIT PULL BOX DETAIL

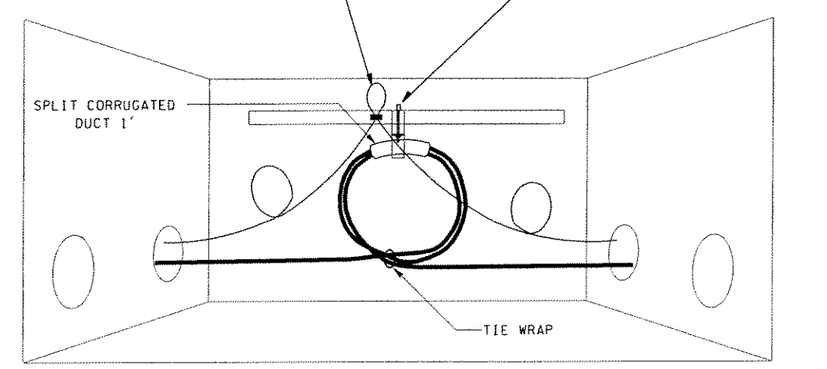

COIL CABLE BY USING FIGURE 8 FOLDED IN THE MIDDLE TO MAKE A LOOP.

PULL BOX RACKING PLAN

FILE NAME	C:\AAWork\Kirkland NickelStage 1- ITS Master Details\Vaults.dgn			REGION NO.	STATE	FED.AID PROJ.NO.	PLOT8
TIME	08:05:23 AM			10	WASH		
DATE	09/14/2004			JOB NUMBER			SHEET
DESIGNED BY							OF
ENTERED BY				CONTRACT NO.		LOCATION NO.	SHEETS
CHECKED BY							
PROJ. ENGR.							
REGIONAL ADM.		REVISION	DATE	BY			

P.E. STAMP BOX DATE

P.E. STAMP BOX DATE

Washington State Department of Transportation