APPENDIX N
BRIDGE AS-BUILTS

I-405, SR520 to SR522 Stage 1
(Kirkland Stage 1)

Draft RFP
March 22, 2005

INTERSTATE 405 Project Team
Congestion Relief & Bus Rapid Transit Projects

FED. ROAD DIV. NO.	STATE	FED. AID PROJ. NO.	SHEET NO.	TOTAL SHEETS
8	WASH.	I-405-3(308)173	112	163

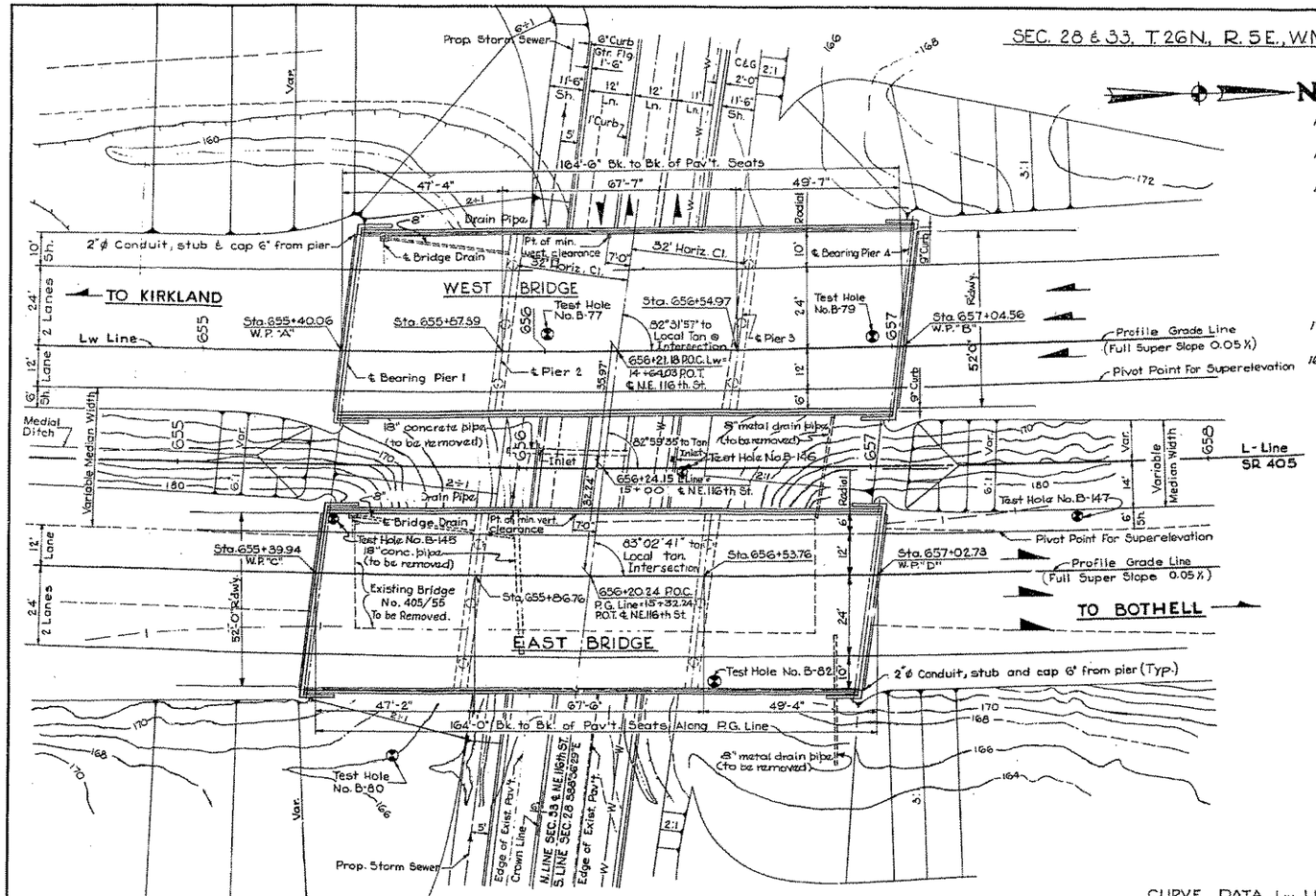

PLAN

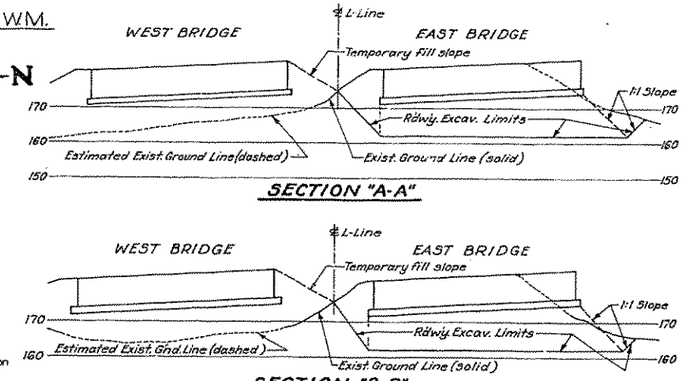

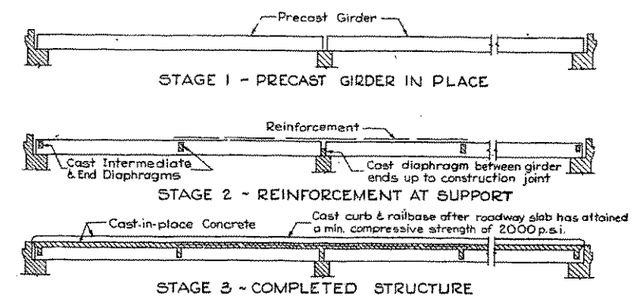

GENERAL NOTES

All material and work shall be in accordance with the requirements of the State of Washington, Department of Highways, Standard Specifications for Road and Bridge Construction, dated 1963 and Amendment No.2, dated June, 1968.

Footing elevations are subject to change depending upon foundation material encountered. Reinforcing Steel for the footings and columns shall not be cut until final footing elevations have been determined in the field.

The concrete in the footings of all piers shall be Class "B" mix. All other cast in place concrete shall be Class "AX" mix.

The roadway slab shall be placed in one continuous pour each side of longit. constr. joint after the falseworks for piers 2 & 3 has been released. Falsework shall be carefully released to prevent impact or undue stresses in the structure.

The maximum design soil pressure per square foot is: Two (2) tons for piers 1 & 4 West Bridge and East Bridge, & three (3) tons for all piers 2 & 3.

APPROXIMATE QUANTITIES

	East Bridge	West Bridge	
Structure Excavation	660	590	cu yds.
Steel Reinforcing Bars	30,700	30,700	Lbs.
Concrete Class "B"	107	107	cu yds.
Concrete Class "AX"	138	138	cu yds.
Water Reducing Additive	220	200	Dollars
Superstructure (N.E. 116 th. St. Overcrossing, East Bridge.)	Lump Sum		
Superstructure (N.E. 116 th. St. Overcrossing, West Bridge.)		Lump Sum	
Removing Existing Bridge No. 405/55	Lump Sum		

LOADING: HS20 or TWO 24K AXLES @ 4' C'T'RS

SEQUENCE OF CONSTRUCTION

CURVE DATA L-LINE

Δ = 27°22'07" Lt.
R = 4,297.30'
T = 1,146.49'
L_s = 200.00'
L_c = 1,652.64'
D_s = 1°20'00" Max.
D_c = 1°20'00"
a = 2/3
CΔ = 24° 42' 07"

Sta. T.S. = 645+82.55
Sta. S.C. = 647+82.55
Sta. P.I. = 657+29.04
Sta. C.S. = 666+35.19
Sta. S.T. = 668+35.19

Equations
Sta. 645+82.55 Lw Line = Sta. 645+82.55 L-Line
Sta. 668+17.28 BK L_W Line = Sta. 668+35.19 AHD L_W Line = Sta. 668+35.19 L-Line

CURVE DATA Lw LINE

Δ	= 1°20'00" Lt.	Δ	= 26°02'07" Lt.
R	= 8,562.97	R	= 4,117.88'
T	= 99.65'	T	= 952.02'
L	= 199.25'	L	= 1,871.17'
E	= 0.58'	E	= 108.62'
D	= 0°40'09"	D	= 1°23'29"
P.C.	= Sta. 645+82.55	P.C.C.	= Sta. 647+81.80
P.I.	= Sta. 646+82.18	P.I.	= Sta. 657+33.82
P.C.C.	= Sta. 647+81.80	P.T.	= Sta. 666+52.97

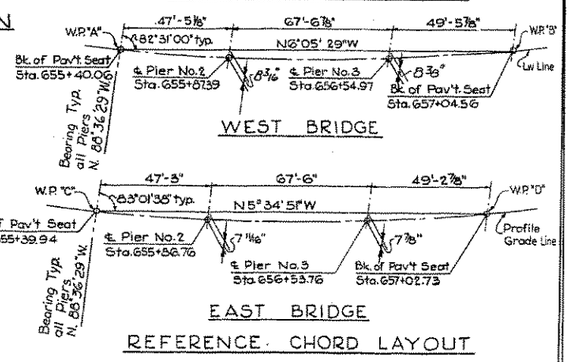

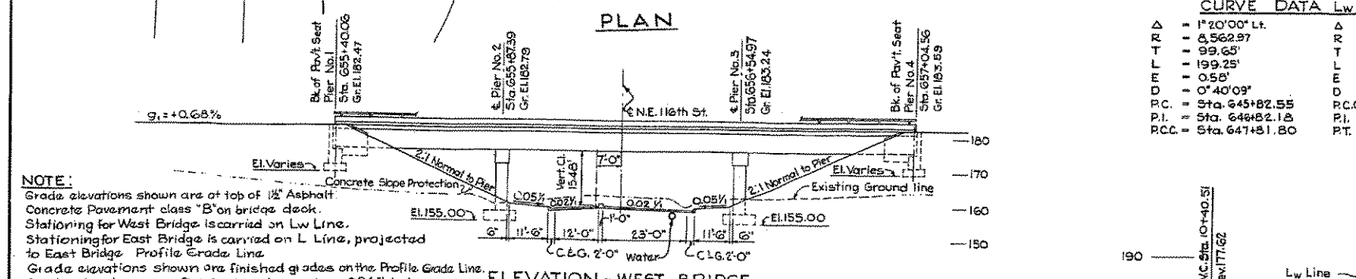

ELEVATION - WEST BRIDGE

NOTE:
Grade elevations shown are at top of 1½" Asphalt Concrete Pavement class "B" on bridge deck.
Stationing for West Bridge is carried on Lw Line.
Stationing for East Bridge is carried on L Line, projected to East Bridge Profile Grade Line.
Grade elevations shown are finished grades on the Profile Grade Line.
Grade elevations are finished grades and are 0.84 ft. below Profile Grades for West Bridge and 0.36 ft. above Profile Grades for East Bridge.

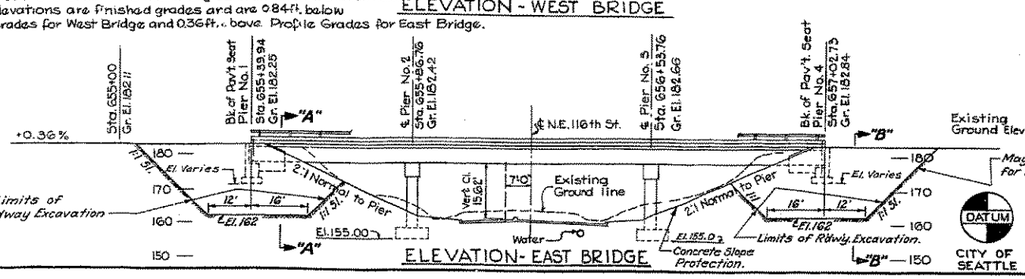

ELEVATION - EAST BRIDGE

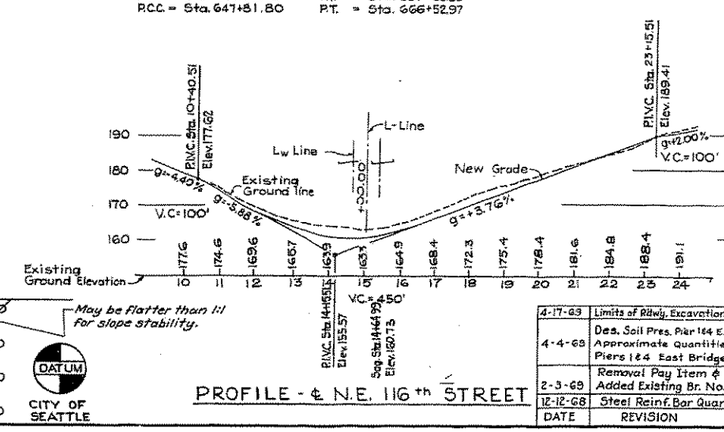

PROFILE - ℄ N.E. 116th STREET

DATE	REVISION	BY	APP'D.
4-17-63	Limits of Rdwy. Excavation	G.A.R.	[illegible]
4-4-63	Des. Soil Pres. Pier 1 & 4 E. Br. Approximate Quantities & Piers 1 & 4 East Bridge	G.A.R.	[illegible]
2-3-69	Removal Pay Item & Added Existing Br. No.	G.A.R.	[illegible]
12-12-68	Steel Reinf. Bar Quant.	G.A.R.	[illegible]

SR 405 MP 18.87 TO MP 21.83
NE 100TH STREET TO NE 145TH STREET
KING COUNTY
NE 116TH STREET OVERCROSSING

LAYOUT

WASHINGTON STATE HIGHWAY COMMISSION
DEPARTMENT OF HIGHWAYS
OLYMPIA, WASHINGTON

GEORGE D. EARLE, CHAIRMAN
R.A. ARMSTRONG — SAM FRANKSON
H. WARREN — JOHN M. SHEPP

APPROVED Feb. 27, 1969

CONTRACT NO. 8615

SHEET 118 OF 169 SHEETS

DATUM CITY OF SEATTLE

SR405-1500-1

V-1-S-T-A

3A-425/61

FED. ROAD DIV. NO.	STATE	FED. AID PROJ. NO.		SHEET NO.	TOTAL SHEETS
8	WASH.	I-405-3(308)173		113	169

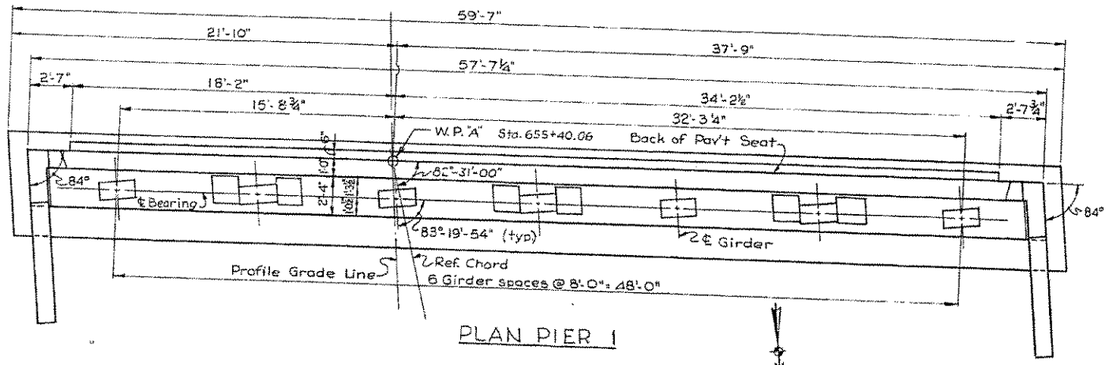

PLAN PIER 1

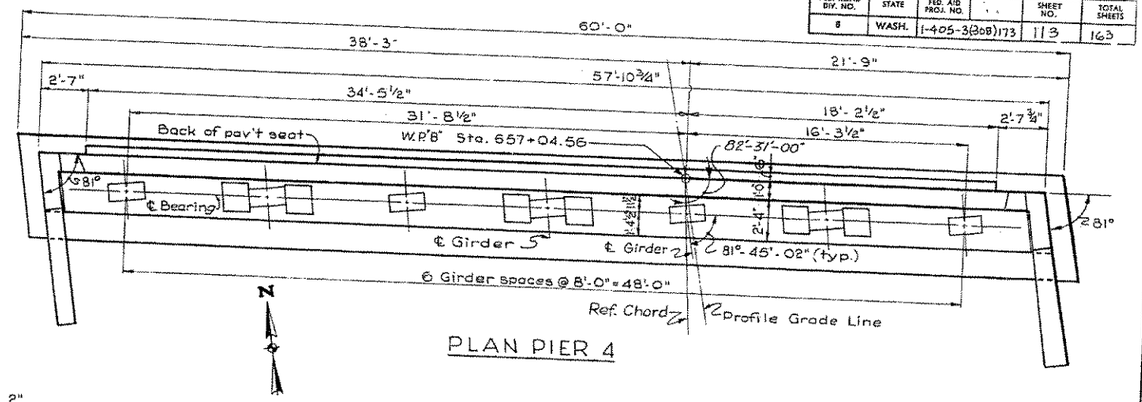

PLAN PIER 4

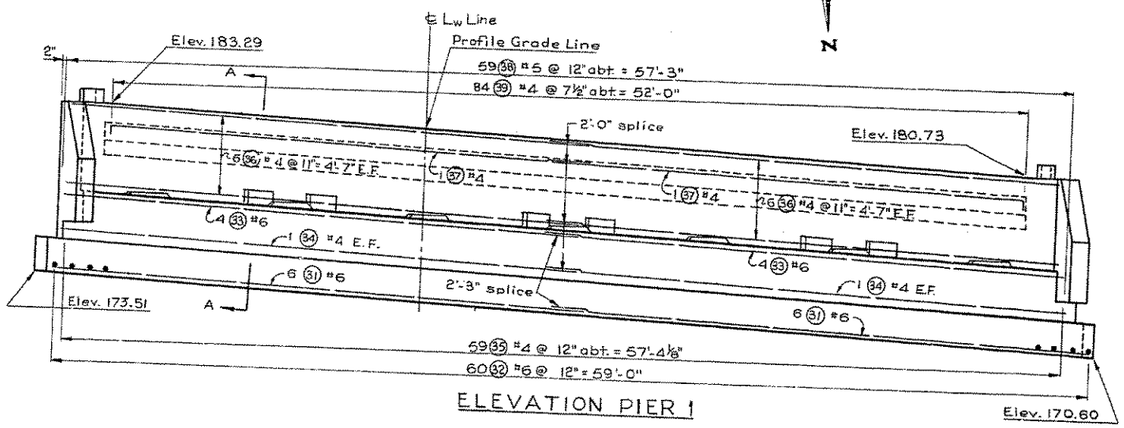

ELEVATION PIER 1

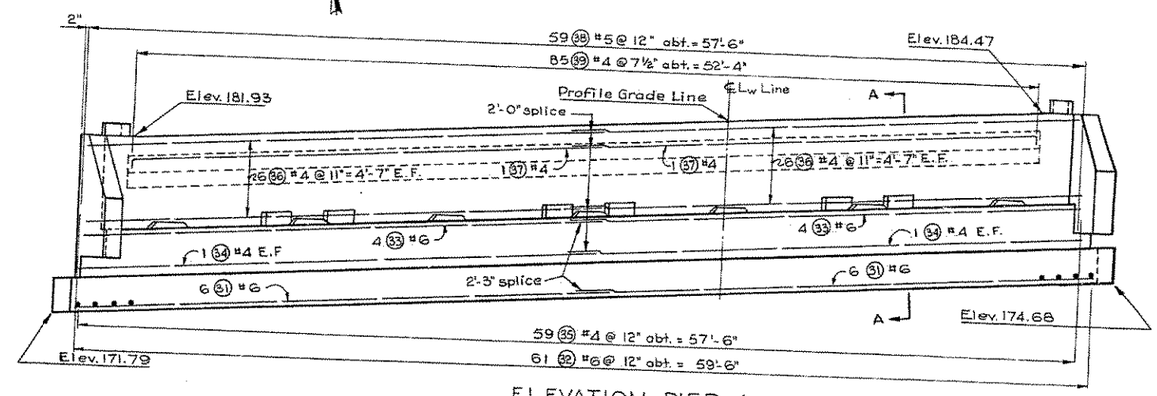

ELEVATION PIER 4

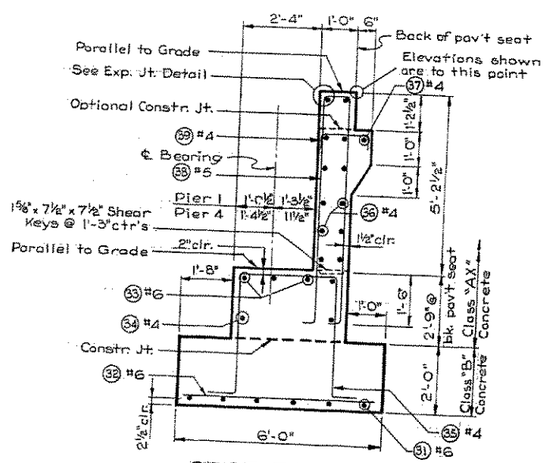

SECTION A-A

Note:
For Footing Layout see
Wingwall & Misc. Details Sheet.

SR 405 MP 18.87 TO MP 21.83
NE 100TH STREET TO NE 145TH STREET
KING COUNTY
NE 116TH STREET OVERCROSSING

END PIERS - WEST BRIDGE

WASHINGTON STATE HIGHWAY COMMISSION
DEPARTMENT OF HIGHWAYS
OLYMPIA, WASHINGTON

APPROVED Feb. 27, 1969

CONTRACT NO. 8615 SHEET 119 OF 169 SHEETS

SR 405-1500-2

V-I-S-T-A

SR-405/51

19/5

FED. ROAD DIV. NO.	STATE	FED. AID PROJ. NO.	SHEET NO.	TOTAL SHEETS
8	WASH.	I-405-3(308)173	114	163

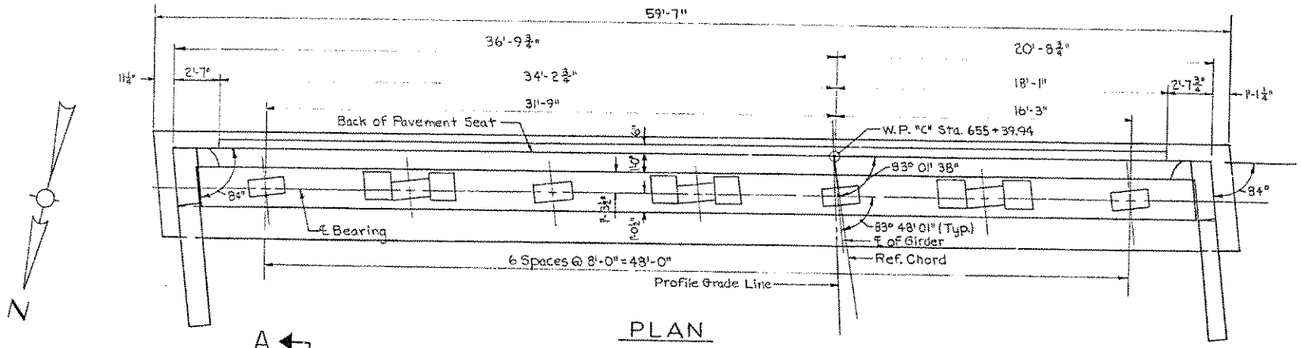

PLAN

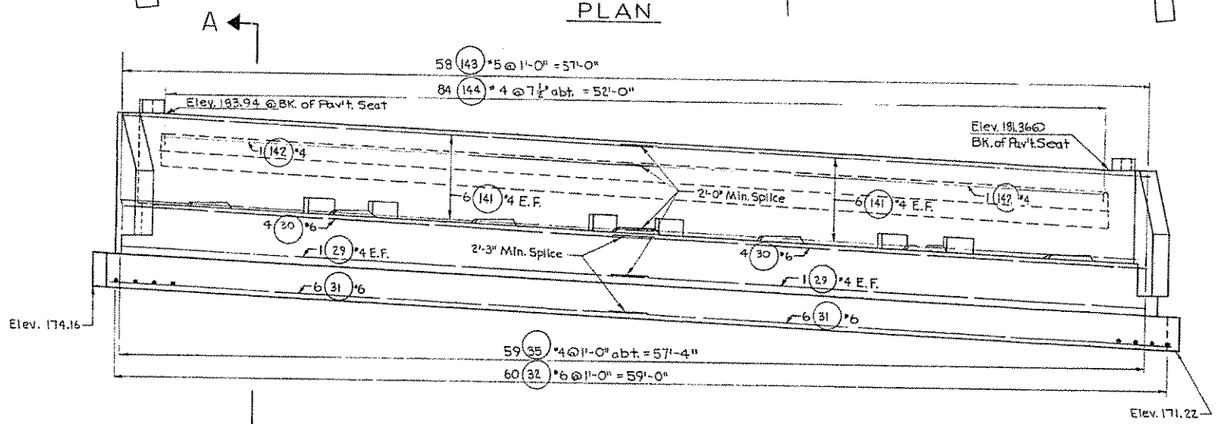

ELEVATION
END PIER 1 - EAST BRIDGE

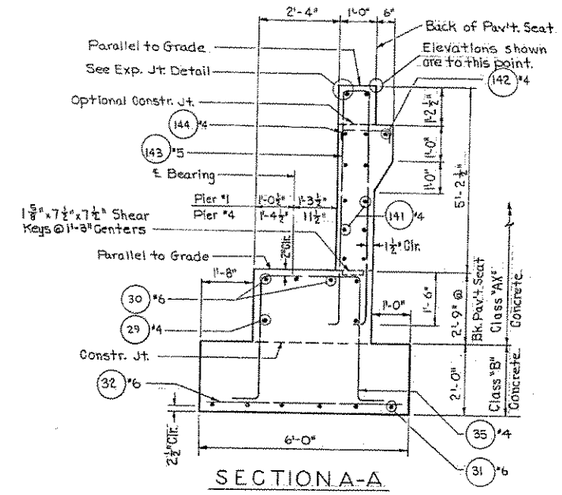

SECTION A-A

Engineer of Bridge Design
Supervising Bridge Engr.
Detailed
Design Checked
Drawn by VNH
Quantities Figured VSD
Quantities Checked VNH

Apr. 1969
Apr. 1969
Apr. 1969

SR405-1500-3

4-17-69	Major Revisions	VNH	
Date	Revisions	By	Appd

SR 405 MP 18.87 TO MP 21.83
NE 100TH STREET TO NE 145TH STREET
KING COUNTY
NE 116TH STREET OVERCROSSING

END PIER 1 - EAST BRIDGE

WASHINGTON STATE HIGHWAY COMMISSION
DEPARTMENT OF HIGHWAYS
OLYMPIA, WASHINGTON

GEORGE O. ZANK, CHAIRMAN
R.L. MCKAYSON
H.W. MAZON
BAKER FERGUSON
JOHN N. RUPP

APPROVED. Feb. 27, 1969
DATE:

CONTRACT NO. 8615

SHEET 120 OF 169 SHEETS

SR-445/51

19/5

FED. ROAD DIV. NO.	STATE	FED. AID PROJ. NO.	SHEET NO.	TOTAL SHEETS
8	WASH.	I-405-3(308)173	115	163

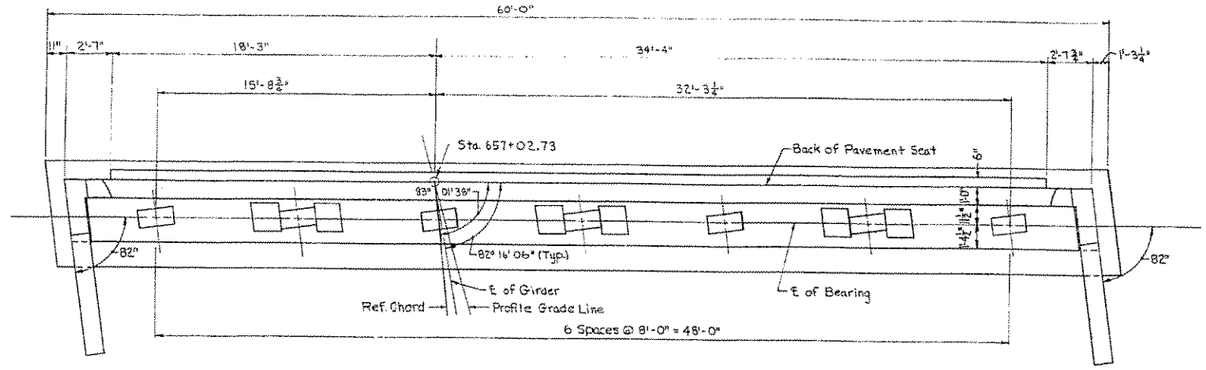

PLAN

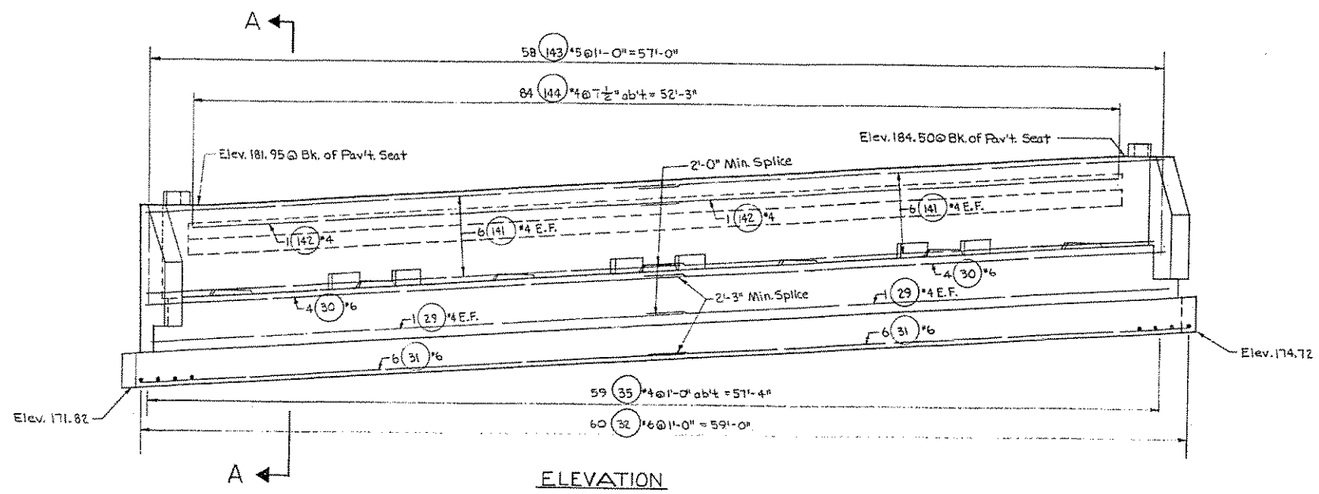

ELEVATION

END PIER 4 – EAST BRIDGE

Note: For Section A-A, See "END PIER 1 - EAST BRIDGE"

4-17-69	Major Revisions	VNH	
Date	Revisions	By	Appd

SR 405 MP 18.87 TO MP 21.83

NE 100TH STREET TO NE 145TH STREET

KING COUNTY

NE 116TH STREET OVERCROSSING

END PIER 4 - EAST BRIDGE

WASHINGTON STATE HIGHWAY COMMISSION
DEPARTMENT OF HIGHWAYS
OLYMPIA, WASHINGTON

GEORGE D. ZARNI, CHAIRMAN

E.L. ANDERSON
H. WALSH
LANCE PETERSON
JOHN M. BOPP

APPROVED. Feb. 27, 1969

DATE

CONTRACT NO. 8665

SHEET 121 OF 169 SHEETS

Supervising Bridge Engr.
Designed
Design Checked
Drawn By
Quantities Figured
Quantities Checked

VNH
HSD
VNH

Apr. 1967
Apr. 1969
Apr. 1969

SR405-1500-4

SR-405/61

17/49

FED. ROAD DIV. NO.	STATE	FED. AID PROJ. NO.	SHEET NO.	TOTAL SHEETS
3	WASH.	I-405-3(308)173	116	163

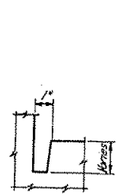

DRAINAGE GROOVE DETAIL
(As reqd. by the Engineer)

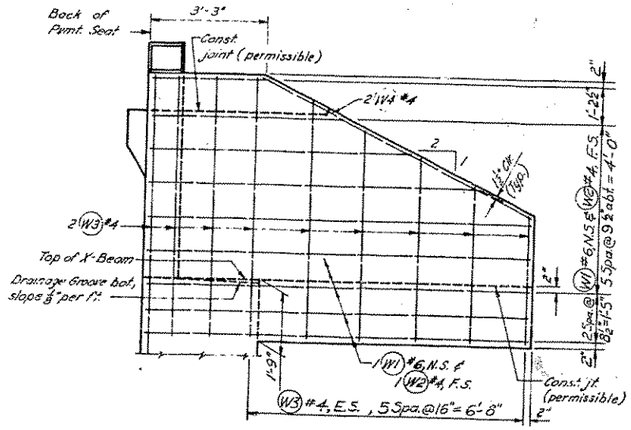

WING WALL ELEVATION
(Shown for 0° skew)

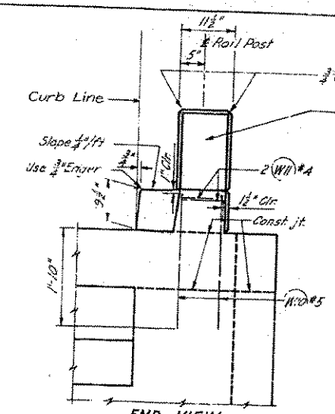

END VIEW
(Shown for 0° skew)

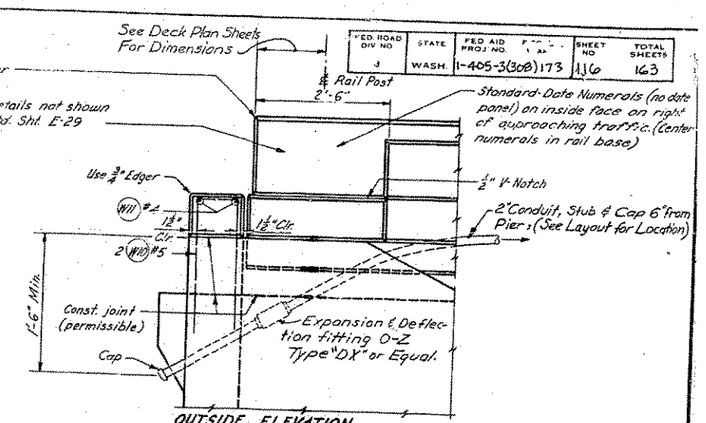

OUTSIDE ELEVATION
(Shown for 0° skew)
All vert. lines plumb

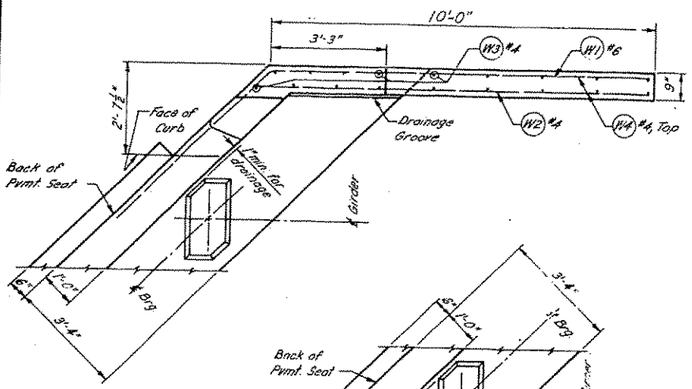

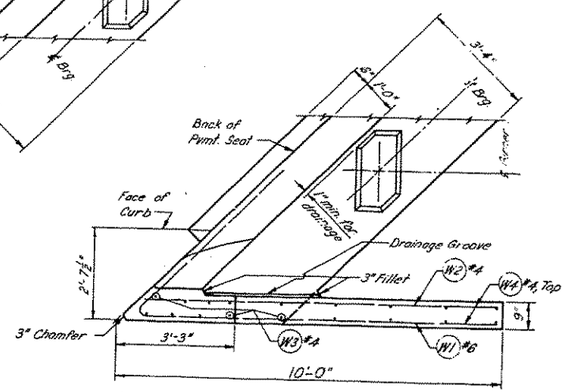

WING WALL PLAN (See End Pier Sheets for Skew Angle)

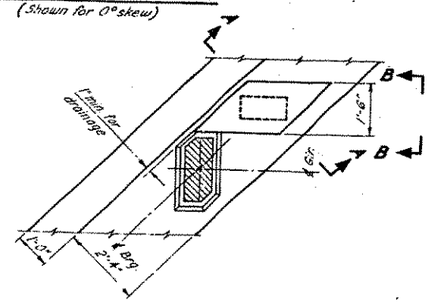

GIRDER STOP PLAN AT END PIERS
Set Girders in place prior to pouring Girder Stops.

LEGEND
E. S. = Each Side
F. S. = Far Side
N. S. = Near Side

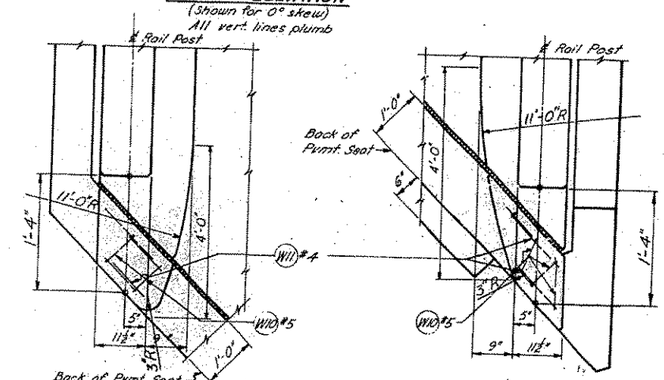

9" CURB DETAILS AT END PIERS
(All Curb & Rail Base Chamfers ¾" except top of Rail Base as noted)

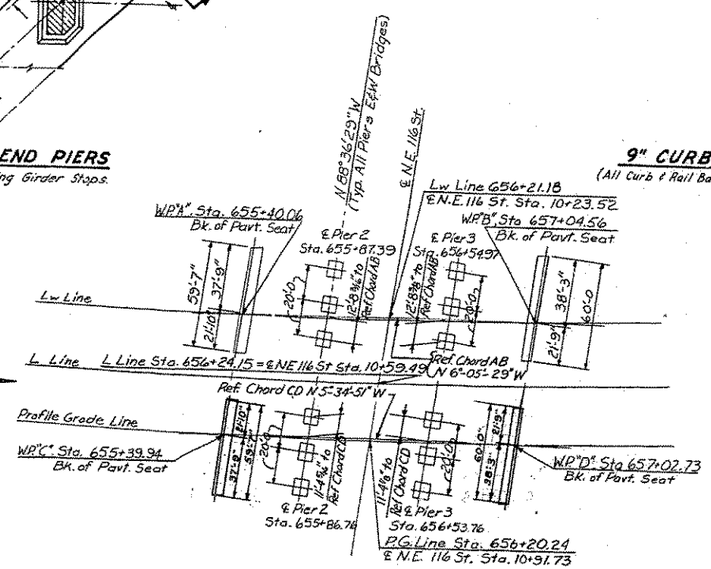

FOOTING LAYOUT

BAR LIST
All dimensions are out to out.

MARK	LOCATION	SIZE	
W1	Wing Wall ~ Horiz.	6	
W2	" " "	4	Str.
W3	" " Vert.	4	"
W4	" " Top	4	"
W10	Curb to Bk. Wall ~ Tie	5	
W11	" Transv.	4	
W20	Girder Stop ~ Longit.	4	Str.
W21	" " Transv.	5	

BENDING DIAGRAM

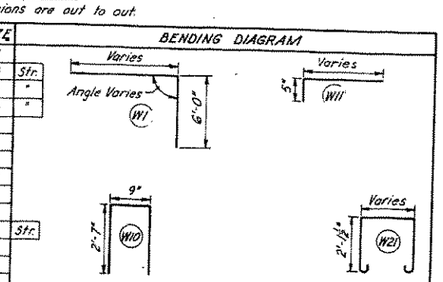

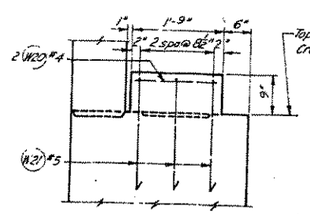

SECTION A-A

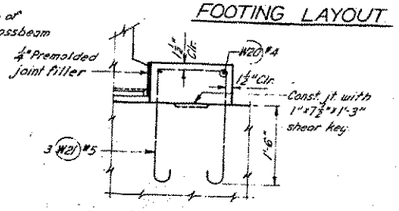

VIEW B-B

DATE	REVISION	BY	APP'D.
4-17-69	Footings ~ Piers 1 & 4 ~ East Bridge.	G.A.R.	J.N.W.

SR 405 MP 18.87 TO MP 21.83
NE 100TH STREET TO NE 145TH STREET
KING COUNTY
NE 116TH STREET OVERCROSSING

WING WALLS & MISC. DETAILS

WASHINGTON STATE HIGHWAY COMMISSION
DEPARTMENT OF HIGHWAYS
OLYMPIA, WASHINGTON

APPROVED Feb. 27, 1969

CONTRACT NO. 9615 SHEET 122 OF 169 SHEETS

FED. ROAD DIV. NO.	STATE	FED. AID PROJ. NO.	FISCAL YEAR	SHEET NO.	TOTAL SHEETS
8	WASH.	I-405-3(308)173		117	163

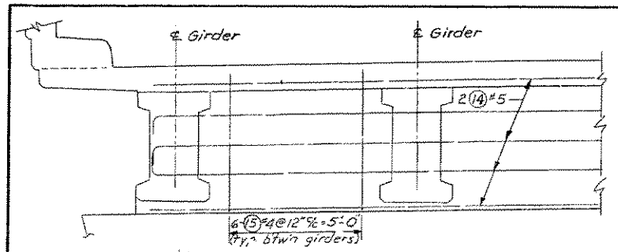

HINGE ELEVATION @ INTERM. PIERS

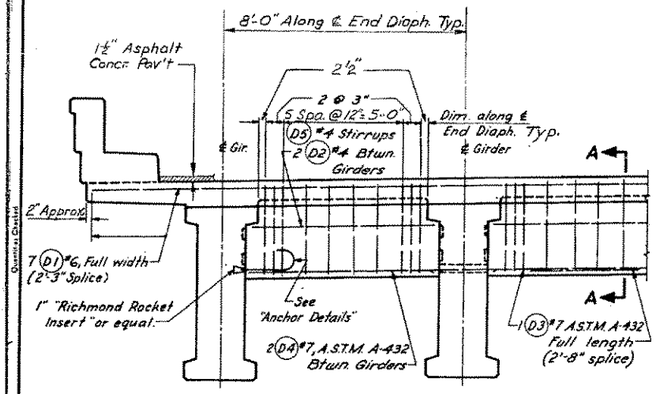

TYPICAL END DIAPHRAGM AT END PIERS

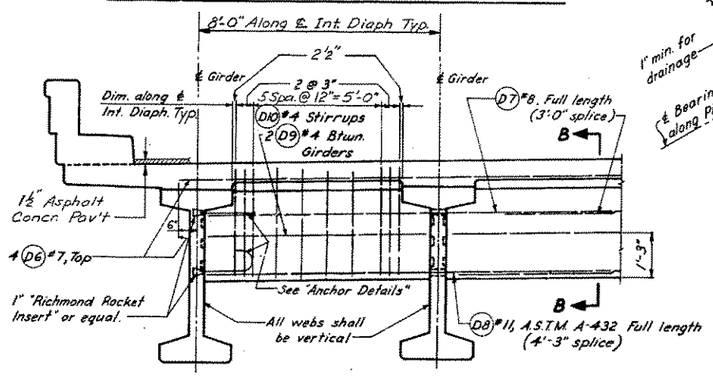

TYPICAL INTERMEDIATE DIAPHRAGM

NOTE:
Girders shall be held rigidly in place when diaphragms are poured. Reinforcing bars shall be threaded through holes in girders prior to placing of exterior girders.

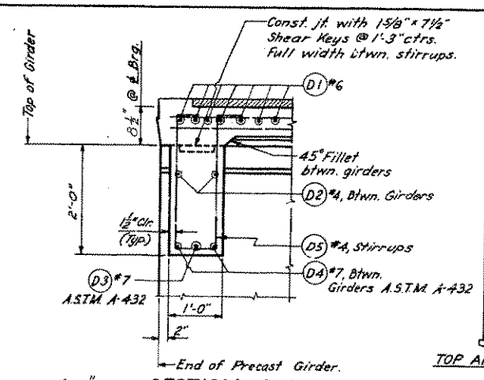

SECTION A-A

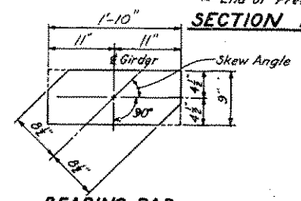

BEARING PAD

Laminated Elastomeric Brg. Pad 1½" thick (2 shims) Durometer hardness = 60.

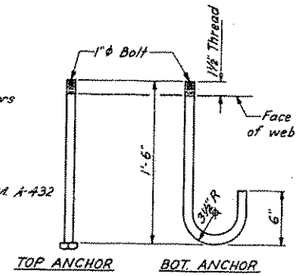

ANCHOR DETAILS

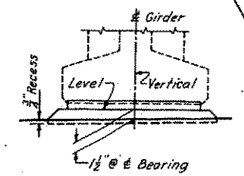

VIEW G-G

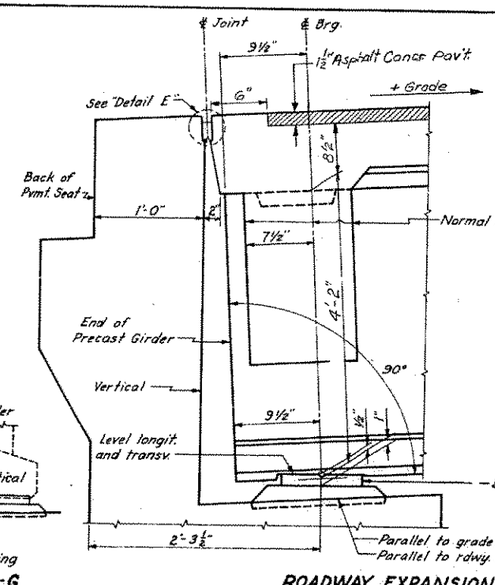

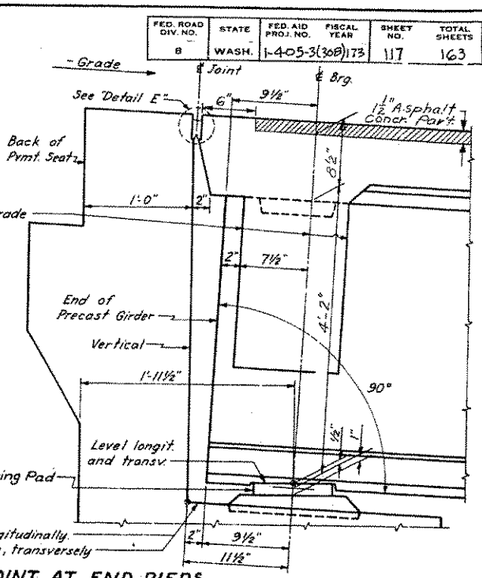

ROADWAY EXPANSION JOINT AT END PIERS

(Longitudinal dimensions are normal to skew.)

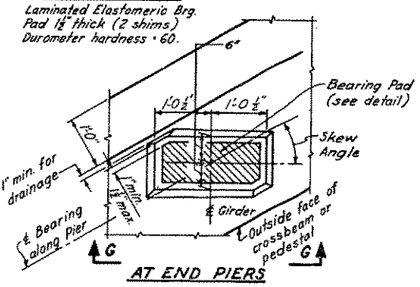

AT END PIERS

GROUT PAD

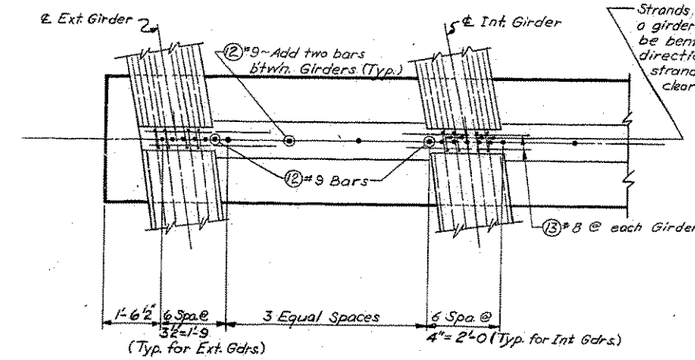

SECTION H-H

Strands extending from a girder face shall all be bent in the same direction. Bend opposite strands horizontally to clear (Typ.)

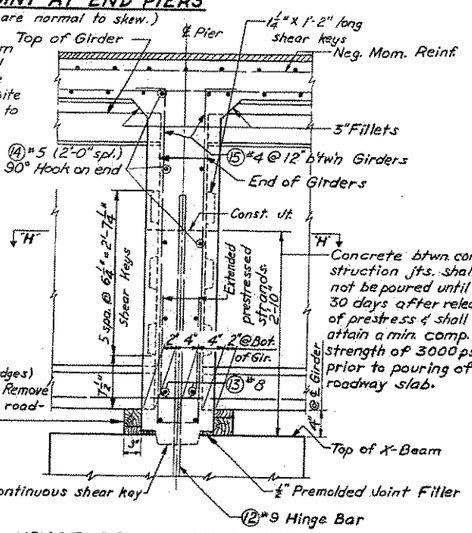

HINGE DETAIL AT INTERM. PIERS

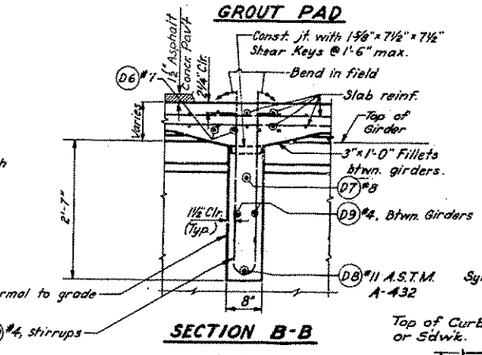

SECTION B-B

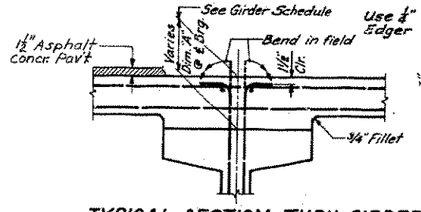

TYPICAL SECTION THRU GIRDER SHOWING METHOD OF ADJUSTING RDWY. ELEVS. FOR VERT. CURVES, CAMBER OR SUPERELEVATION.

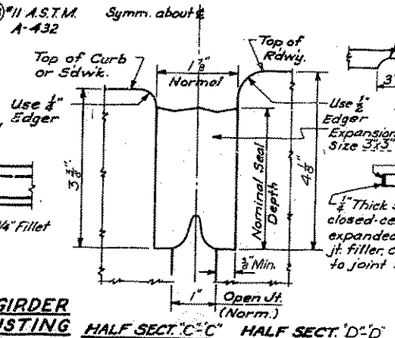

DETAIL "E"

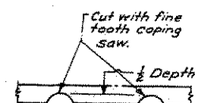

DETAIL "F"

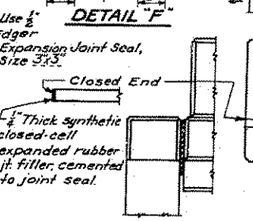

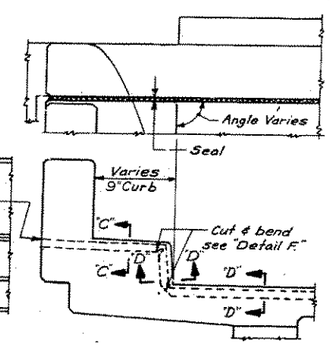

EXPANSION JOINT DETAIL AT END PIER

BAR LIST

All dimensions are out to out.

MARK	LOCATION	SIZE	BENDING DIAGRAM
D 1	End Diaphragm - Top	6	Str.
D 2	" " " Btwn. Girders	4	"
D 3*	" " Bot.	7	"
D 4*	" " " Btwn. Girders	7	"
D 5	" " Stirrups	4	
D 6	Intermediate Diaphragm - Top	7	Str.
D 7	" " In Web	8	"
D 8*	" " Bottom	11	"
D 9	" " Btwn. Girders	4	"
D 10	" " Stirrups	4	

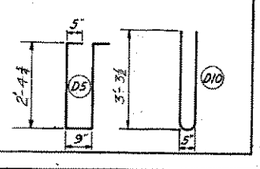

* A.S.T.M. A-432

SR 405 MP 18.87 TO MP 21.83

NE 100TH STREET TO NE 145TH STREET

KING COUNTY

NE 116TH STREET OVERCROSSING

DIAPHRAGM & EXPANSION DETAILS

WASHINGTON STATE HIGHWAY COMMISSION
DEPARTMENT OF HIGHWAYS
OLYMPIA, WASHINGTON

GEORGE H. ZAHN, CHAIRMAN
R.L. BENGSON
H. WARREN
LACEY V. HARRISON
JOHN H. MUPP

APPROVED Feb. 27, 1969

CONTRACT NO. 8615

SHEET 123 OF 169 SHEETS

SR-405/51

19/97

FED. ROAD DIV. NO.	STATE	FED. AID PROJ. NO.		SHEET NO.	TOTAL SHEETS
		I-405-3(508)173		118	169

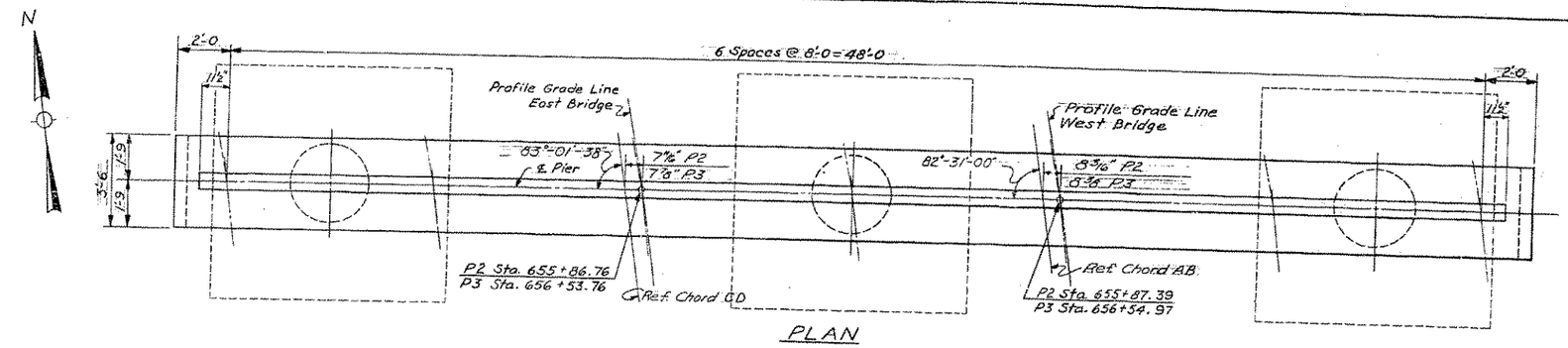

PLAN

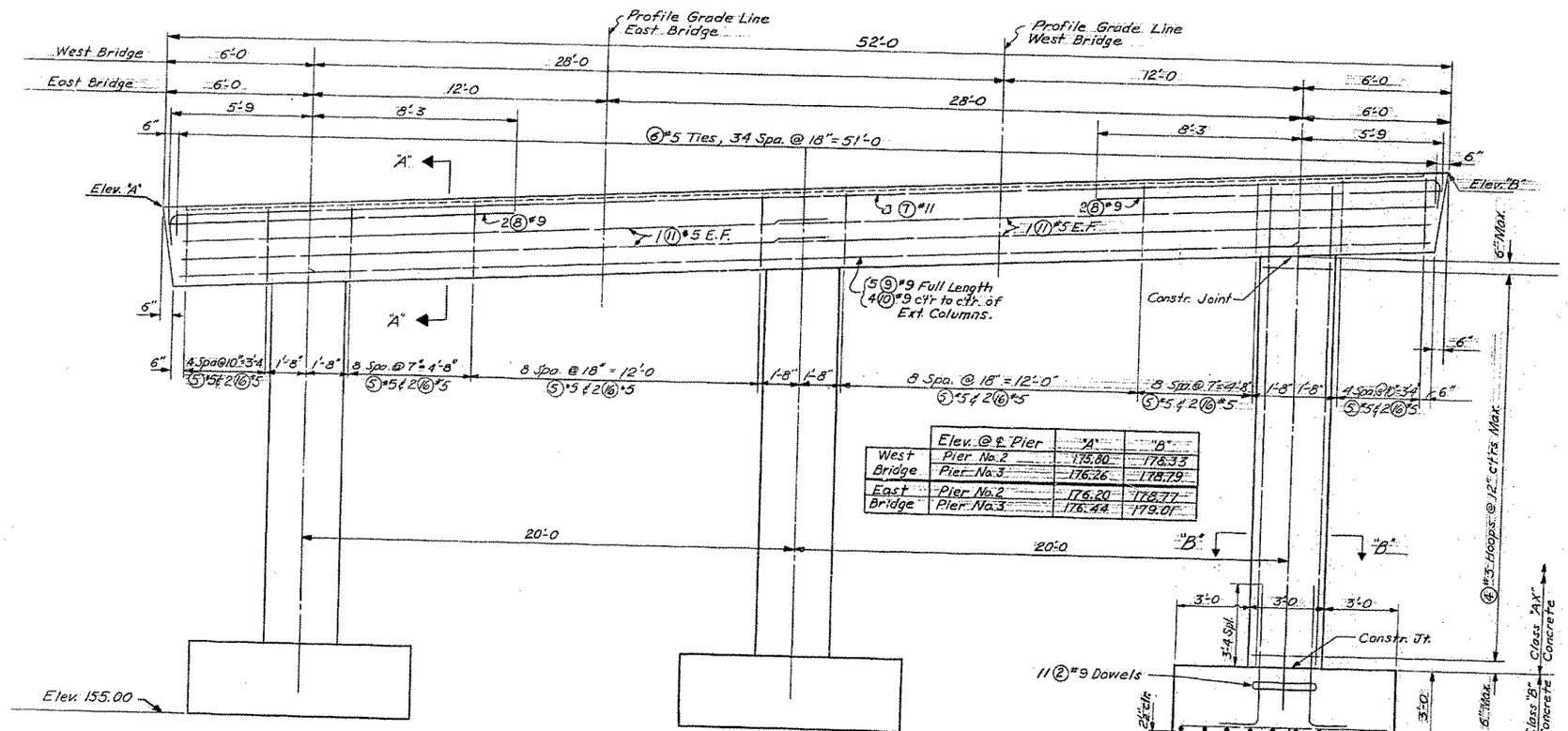

Elev. @ ℄ Pier		"A"	"B"
West Bridge	Pier No. 2	175.80	178.33
	Pier No. 3	176.26	178.79
East Bridge	Pier No. 2	176.20	178.77
	Pier No. 3	176.44	179.01

ELEVATION

Note:
Column & Footing details shown are typical

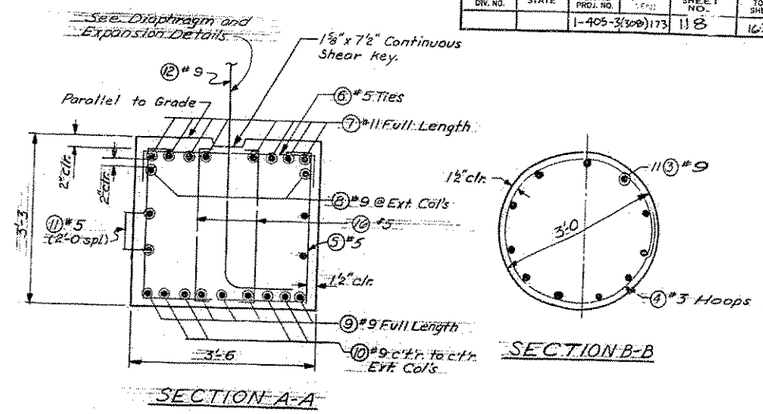

SECTION A-A

SECTION B-B

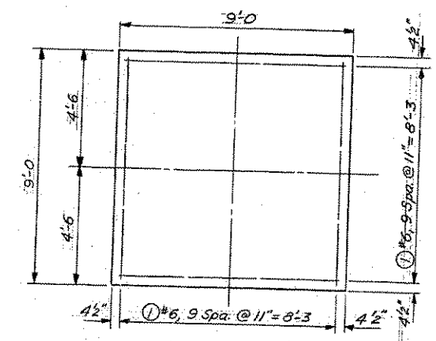

FOOTING PLAN

Bridge Design Engineer	
Supervising Bridge Engr.	
Designed	E.T. 1-15-68
Design Checked	D.Y. 1-17-68
Detailed	
Detail Checked	
Quantities Figured	
Quantities Checked	

Bridge	By	Date
Issued	E.T.	1-15-68
Checked	N.O.	1-25-68
Int. Rev.	E.R.H.	3-28-68
Ext. Rev.		

SR 405
MP 18.87 TO MP 21.83
NE 100TH STREET TO NE 145TH STREET
KING COUNTY
NE 116TH STREET OVERCROSSING

PIERS 2 & 3

WASHINGTON STATE HIGHWAY COMMISSION
DEPARTMENT OF HIGHWAYS
OLYMPIA, WASHINGTON

R.A. NICKERSON
R. YEAGER
GEORGE P. DANN, CHAIRMAN
BAKER FERGUSON
JOHN H. CUPP

APPROVED Feb. 27, 1968

CONTRACT NO. 8615 SHEET 124 OF 169 SHEETS

HOFF-HAYES-STEVENS-THOMPSON & ASSOCIATES
CONSULTING ENGINEERS & ARCHITECTS
810 SOUTH BROADWAY, SEATTLE, WASH.
SEATTLE, WASHINGTON 98134
CUM 9-5522

SR405-1500-7

SR-405/51

19/40

FED. ROAD DIV. NO.	STATE	FED. AID PROJ. NO.		SHEET NO.	TOTAL SHEETS
		I-405-3(308)173		119	163

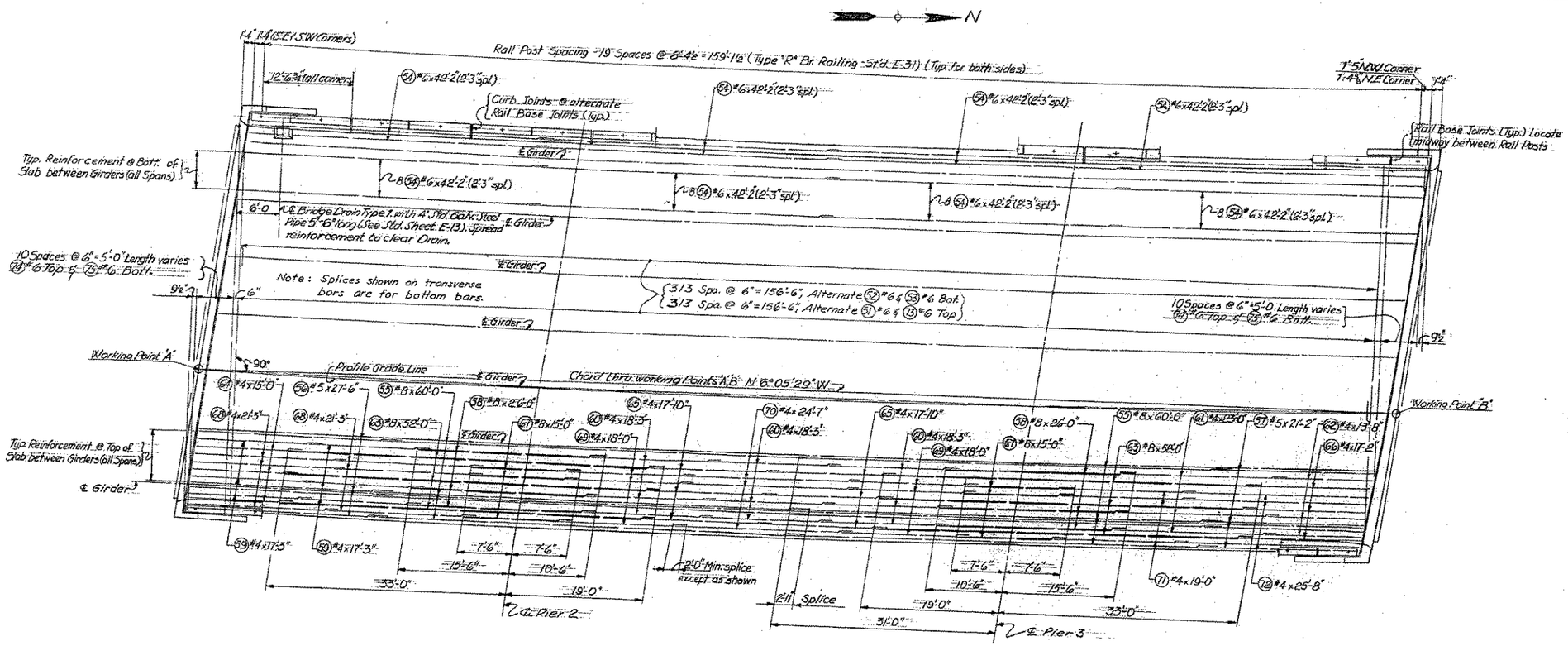

PLAN

Note: Transverse bars are to be laid perpendicular to the chord thru working points "A" & "B"

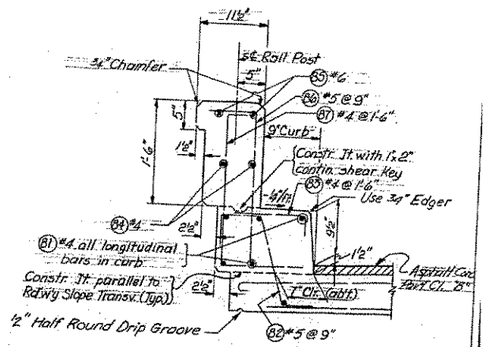

9" CURB DETAIL
(All Chamfers ½" Except as Noted)

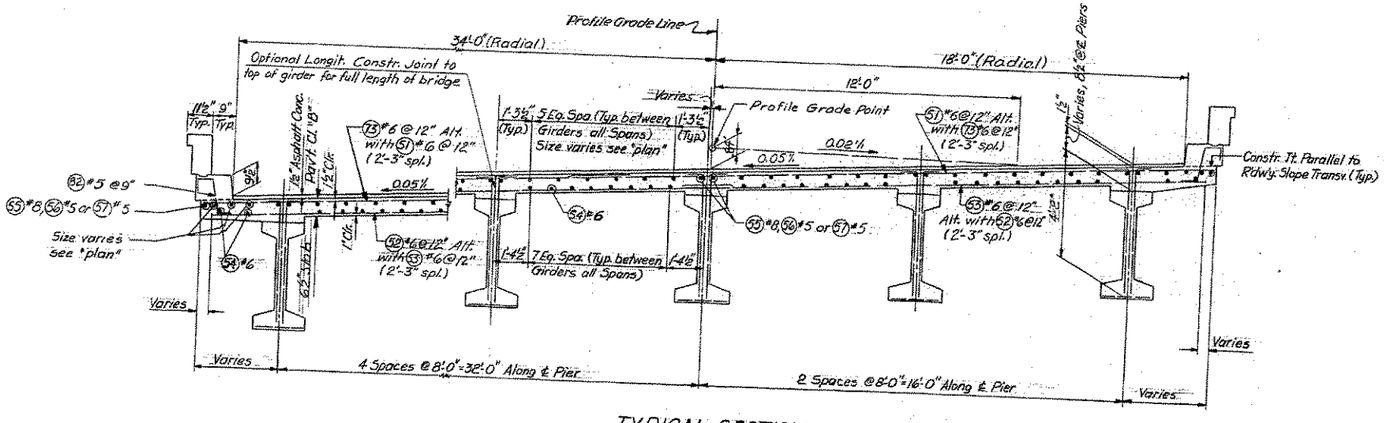

TYPICAL SECTION
Looking Ahead on Station

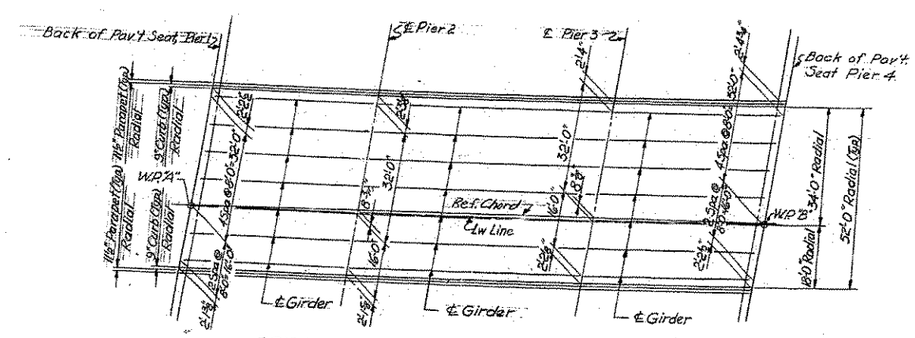

BRIDGE LAYOUT

SR 405 **MP 18.87 TO MP 21.83**

NE 100TH STREET TO NE 145TH STREET

KING COUNTY

NE 116TH STREET OVERCROSSING

DECK PLAN - WEST BRIDGE

WASHINGTON STATE HIGHWAY COMMISSION
DEPARTMENT OF HIGHWAYS
OLYMPIA, WASHINGTON

APPROVED Feb. 27, 1969

CONTRACT NO. 8615 SHEET 125 OF 169 SHEETS

DATE	REVISION	BY	APP'D
1-31-69	Slab overhang soffit	ERH	

SR-405/61

SR405-1500-8

FED. ROAD DIV. NO.	STATE	FED. AID PROJ. NO.	SHEET NO.	TOTAL SHEETS
		I-405-3(308)173	120	163

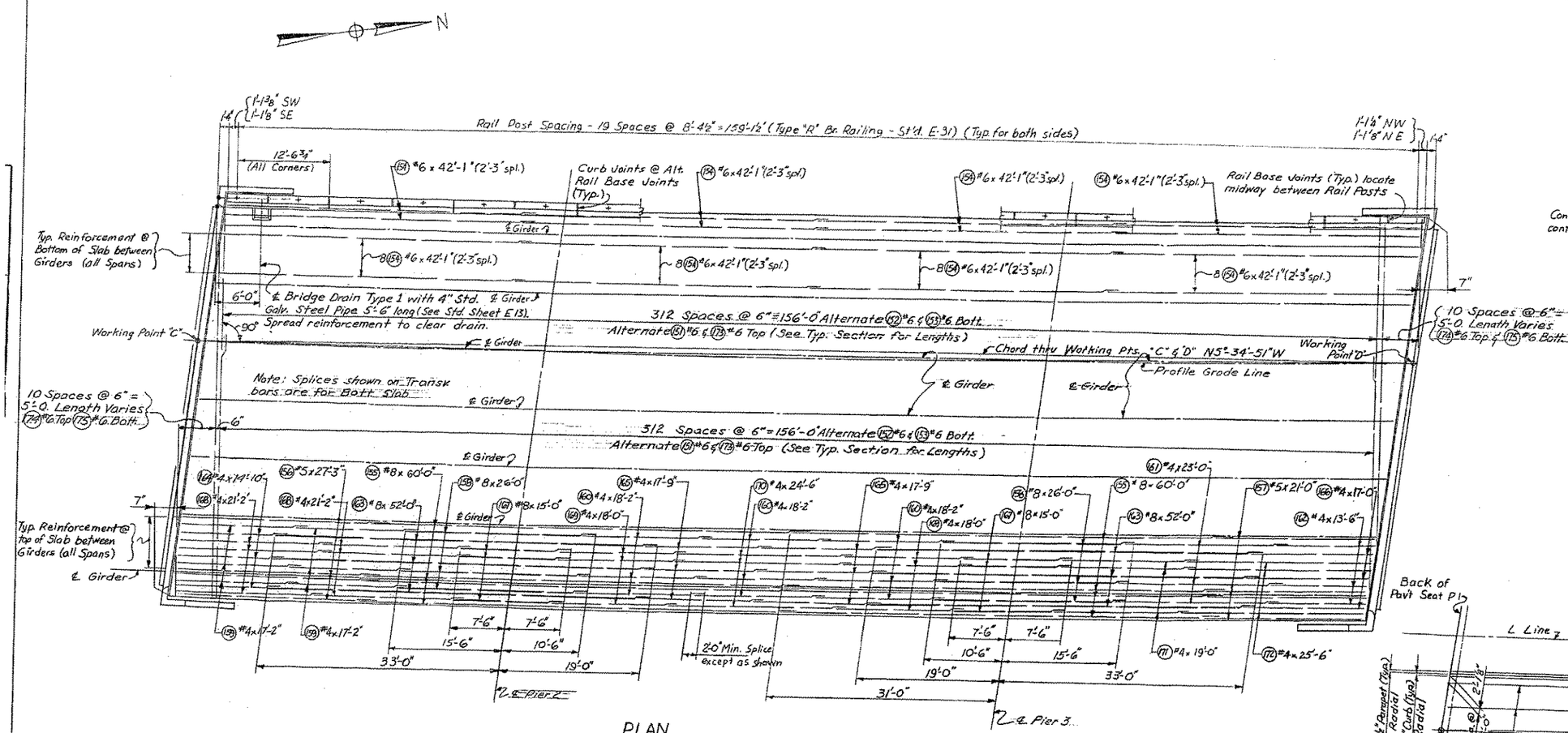

PLAN

Note: Transverse bars are to be laid perpendicular to the chord thru working points "C" & "D".

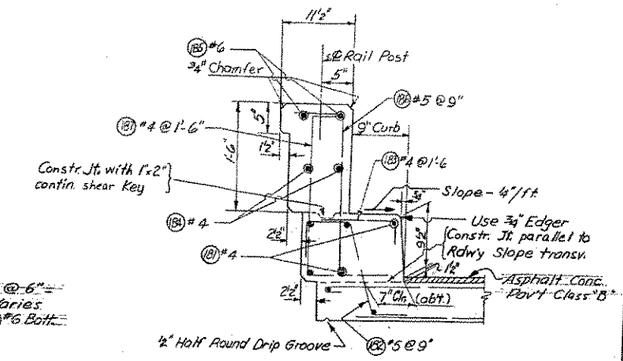

9" CURB DETAIL
(All Chamfers ½" Except as Noted)

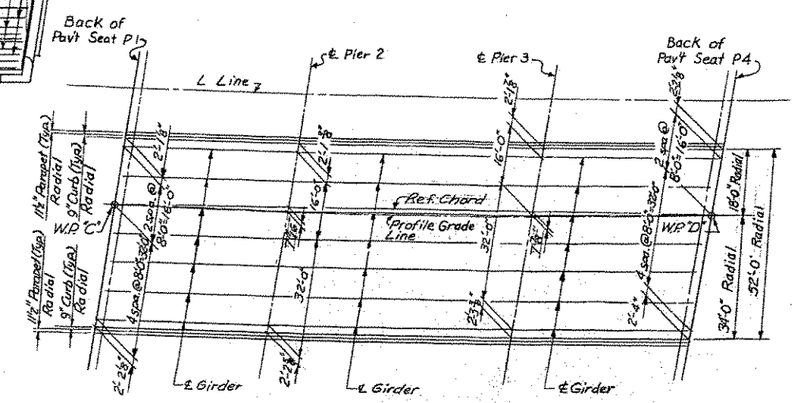

BRIDGE LAYOUT

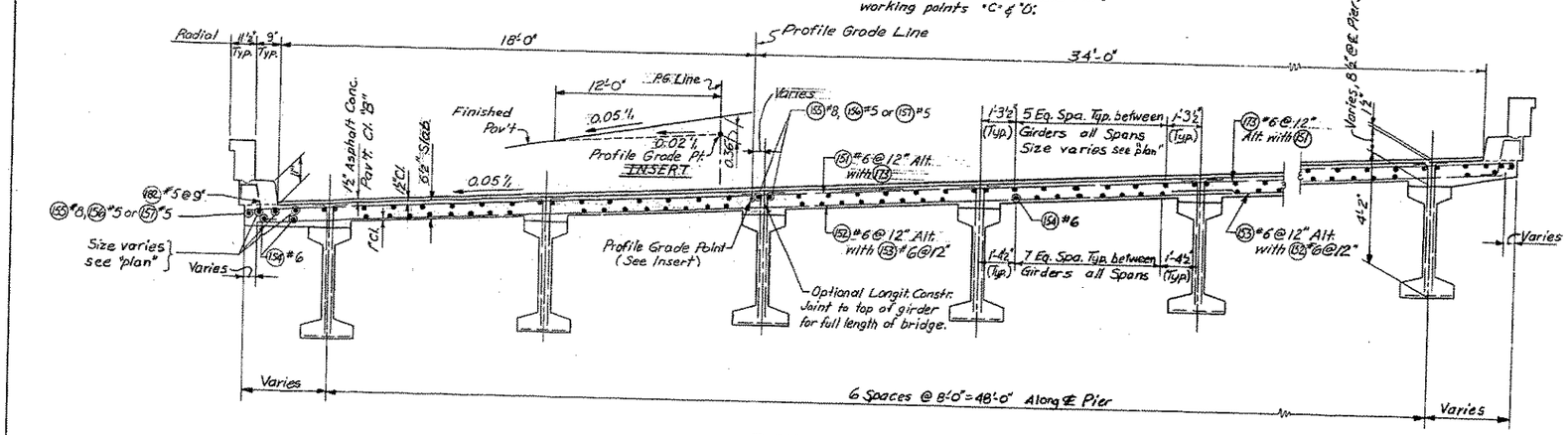

TYPICAL SECTION
Looking Ahead on Station

7-31-69	Slab overhang setting	R.E.H.	[illegible]
DATE	REVISION	BY	APP'D

SR 405 **MP 18.87 TO MP 21.83**

NE 100TH STREET TO NE 145TH STREET

KING COUNTY

NE 116TH STREET OVERCROSSING

DECK PLAN - EAST BRIDGE

WASHINGTON STATE HIGHWAY COMMISSION
DEPARTMENT OF HIGHWAYS
OLYMPIA, WASHINGTON

APPROVED Feb. 27, 1968

CONTRACT NO. 8645 SHEET 126 OF 160 SHEETS

SR-405/61

FED. ROAD DIV. NO.	STATE	FED. AID PROJ. NO.	SHEET NO.	TOTAL SHEETS
8	WASH.	I-405-3(308)173	121	163

NOTE: - ALL DETAILS ON THIS SHEET ARE FOR PRETENSIONED STRAND DESIGN ONLY.

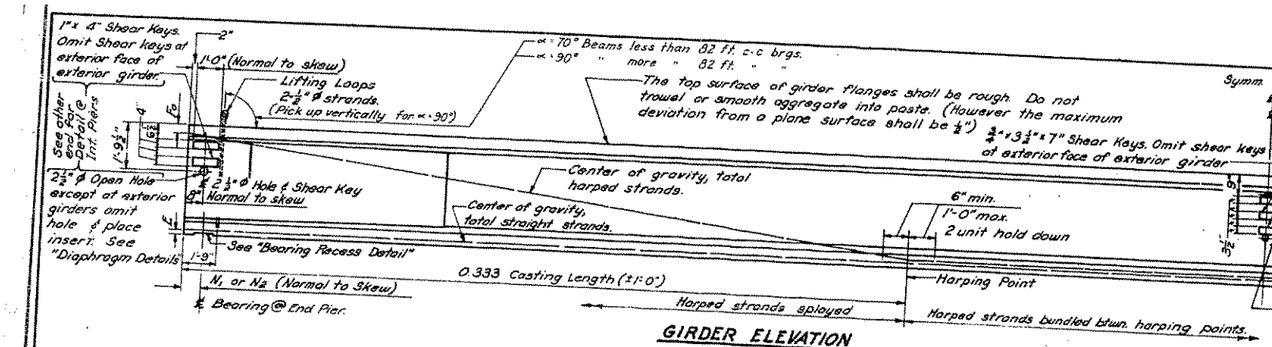

GIRDER ELEVATION

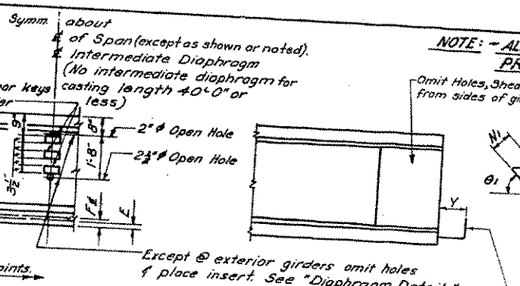

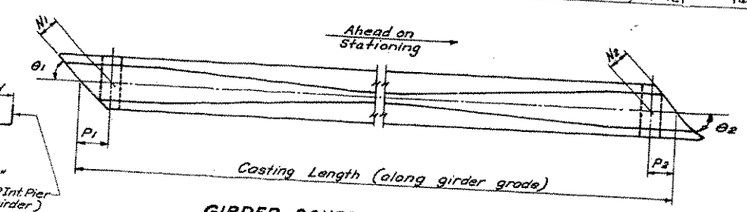

SECTION THRU WEB AT INT. DIAPHRAGMS

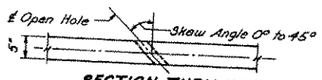

If the lifting loops extend thru the roadway slab they shall be cut off prior to pouring of roadway slab. All lifting strands are of same material and strength as prestressing strands. Wrap lifting loops so that each strand will carry its share of the total load. Extend lifting loops to within 3" clear of the bottom of the girder.

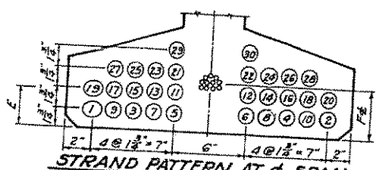

STRAND PATTERN AT ℄ SPAN

Strand location sequence shall be as shown (1), (2), etc.

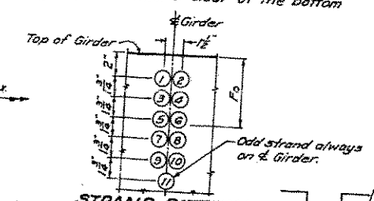

STRAND PATTERN AT GIRDER END

(Harped strands only)
Strand location sequence shall be as shown (1), (2), etc.

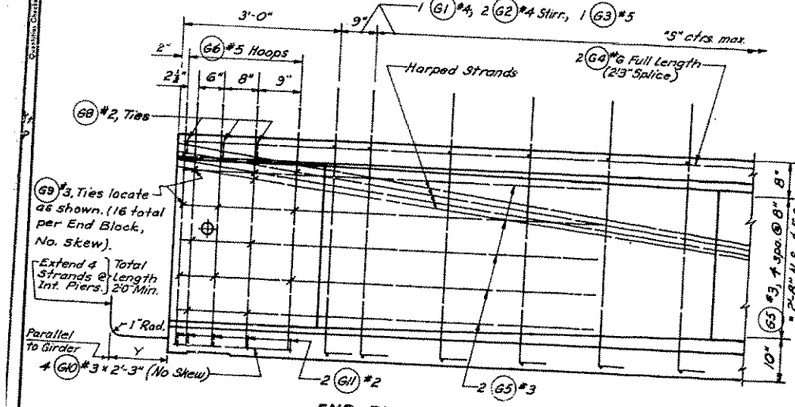

END BLOCK ELEVATION

Cut all strands flush with the girder ends except as indicated for Int. Piers. Paint ends of flush strands with approved epoxy resin @ End Piers.

$Y = \frac{7.5"}{\sin \theta_1 \text{ or } \theta_2}$

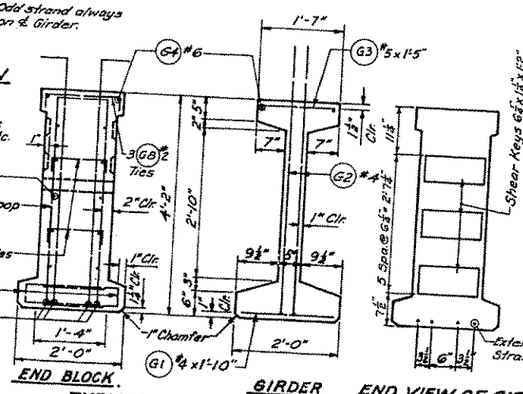

END BLOCK TYPICAL CROSS-SECTIONS — GIRDER

END VIEW OF GIRDER AT INTERMEDIATE PIERS

Girder	Bearing
A	N5°-16'-35" W
B	N6°-04'-33" W
C	N6°-53'-27" W

Girder	Bearing
D	N4°-48'-28" W
E	N5°-34'-00" W
F	N6°-20'-23" W

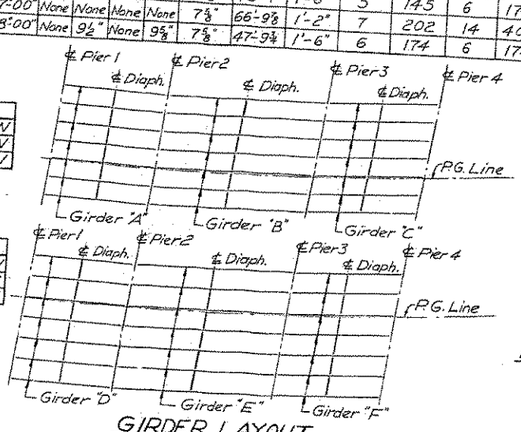

WEST BRIDGE
Southbound

EAST BRIDGE
Northbound

GIRDER LAYOUT

GIRDER SCHEDULE

All strands shall be 1/2" ϕ 270K

"A" Dimension @ ℄ Bearings = 8 1/2"

	SPAN	GIRDER	θ1	θ2	N1	N2	P1	P2	Y	Casting Length	Maximum Stirrup Spacing S	BUNDLED HARPED & STRAIGHT PRE-TENSIONED: HARPED No. of Strands	HARPED Jacking Force (kips)	STRAIGHT No. of Strands	STRAIGHT Jacking Force (kips)	Total Number of Strands	Location of C.G. Steel Area (in.) E	F&	Fo	Camber C (in.)
East Br. West-Bd.	1	A	96°-30'	96°-30'	9 1/2"	None	9 5/8"	None	7 5/8"	45'-6"	1'-6"	5	145	6	174	11	1 3/4"	3"	3 5/8"	1/8"
	2	B	97°-30'	97°-30'	None	None	None	None	7 5/8"	66'-10 7/8"	1'-2"	7	202	14	405	21	2 1/4"	4"	4 4/4"	5/8"
	3	C	98°-30'	98°-30'	None	9 1/2"	None	9 5/8"	7 5/8"	48'-0 1/2"	1'-6"	6	174	6	174	12	1 3/4"	3"	3 3/4"	1/8"
East Br.	1	D	96°-00'	96°-00'	9 1/2"	None	9 5/8"	None	7 5/8"	45'-4"	1'-6"	5	145	6	174	11	1 3/4"	3"	3 3/8"	1/8"
	2	E	97°-00'	97°-00'	None	None	None	None	7 5/8"	66'-9 7/8"	1'-2"	7	202	14	405	21	2 1/4"	4"	4 4/4"	5/8"
	3	F	98°-00'	98°-00'	None	9 1/2"	None	9 5/8"	7 5/8"	47'-9 3/8"	1'-6"	6	174	6	174	12	1 3/4"	3"	3 3/4"	1/8"

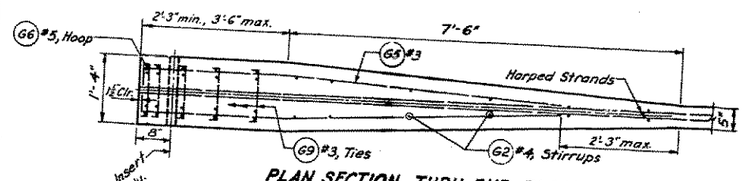

PLAN SECTION THRU END BLOCK

(No Skew)
Extended strands not shown.

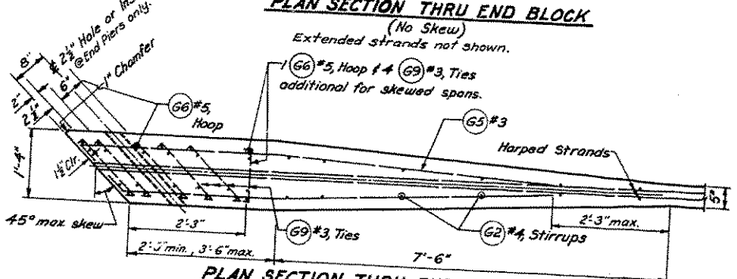

PLAN SECTION THRU END BLOCK

(Skewed Spans)
Extended strands not shown.

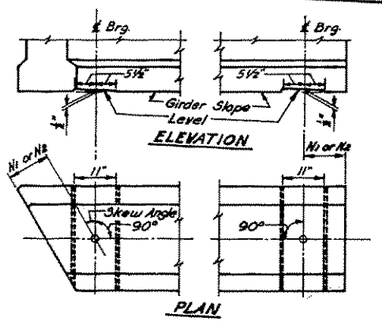

BEARING RECESS DETAIL

All girders @ end piers only.

Note: Forms for bearing pad recesses shall be constructed and fastened in such a manner so as not to cause damage to the girders during the strand release operation.

GIRDER WEIGHTS

SECTION End Blk. lb./lin.ft.	SECTION Girder lb./lin.ft.	Total Weight one Girder #
964	530	48,700#

Standard End Block (No skew) 3'-6" long, Casting Length = 80'

BAR LIST

All dimensions are out to out

MARK	LOCATION	SIZE	
G1	Girder - Bot. Flange	4	Str.
G2	" Stirrup	4	
G3	" Top Flange	5	Str.
G4	" Longit - Top full length	6	"
G5	End Block - Longit.	3	
G6	" " Hoops	5	
G8	" " Ties - Top flange	2	
G9	" " Ties	3	
G10	" " Longit. - Bottom	3	Str.
G11	" " Transv. - "	2	

Note: For "A" Dimen. see Girder Schedule.

BENDING DIAGRAM

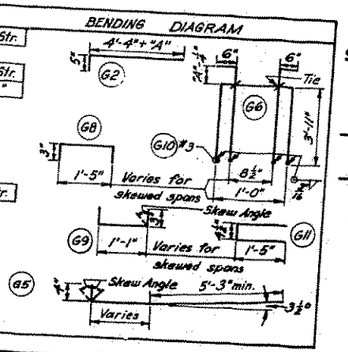

SERIES 80 GIRDER

SR 405 MP 18.87 TO MP 21.83
NE 100TH STREET TO NE 145TH STREET
KING COUNTY
NE 116TH STREET OVERCROSSING

GIRDER DETAILS

WASHINGTON STATE HIGHWAY COMMISSION
DEPARTMENT OF HIGHWAYS
OLYMPIA, WASHINGTON

APPROVED Feb. 27, 1969

CONTRACT NO. 8615 SHEET 127 OF 169 SHEETS

SR-405/61

S = Bar is included in substructure quantities.
F = Bar to be field welded.
T = Tie or Stirrup.
H = A.S.T.M. A-432.
V = Bar dimensions vary between dimensions shown on this line and the following line.

MARK NO.	LOCATION	SIZE	NO. REQ'D.	BEND TYPE	TIE OR STIR	FLD. WELD	SUBSTR.	A-432	VARIES	NO. EACH	U Ft.	U In.	W Ft.	W In.	X Ft.	X In.	Y Ft.	Y In.	Z Ft.	Z In.	θ1 Deg.	θ2 Deg.	LENGTH Ft.	LENGTH In.	WEIGHT Lbs.
1	FOOTING PIER 2/3 WEST BRIDGE	6	120	50			S				8	9.0											8	9.	1577
2	DOWELS PIER 2/3 WEST BRIDGE	9	66	80			S				6	0.0	1	6.0		0.0		4.5		0.0	90	0	7	3.	1630
3	NORTH COL PIER 2 WEST BRIDGE	9	11	50			S				17	9.0											17	9.	664
3	MID COL PIER 2 WEST BRIDGE	9	11	50			S				18	9.0											18	9.	701
3	SOUTH COL PIER 2 WEST BRIDGE	9	11	50			S				19	8.5											19	9.	737
3	NORTH COL PIER 3 WEST BRIDGE	9	11	50			S				18	2.5											18	3.	681
3	MID COL PIER 3 WEST BRIDGE	9	11	50			S				19	2.5											19	3.	718
3	SOUTH COL PIER 3 WEST BRIDGE	9	11	50			S				20	2.0											20	2.	754
4	HOOPS PIER 2/3 WEST BRIDGE	3	99	66			S				2	9.0	2	0.0									10	6.	392
5	X-BEAM PIER 2/3 WEST BRIDGE	5	92	61	T		S				3	3.0	2	11.5	2	11.5		6.0		6.0			9	9.	936
6	X-BEAM PIER 2/3 WEST BRIDGE	5	70	64	T		S					6.0	3	3.0		6.0		0.0					4	1.	295
7	X-BEAM PIER 2/3 WEST BRIDGE	11	16	80			S				51	6.0	1	6.0	1	6.0		7.5		7.5	80	80	53	7.	4552
8	X-BEAM PIER 2/3 WEST BRIDGE	9	~~4~~ 8	50			S				14	0.0											14	0.	~~190~~ 380
9	X-BEAM PIER 2/3 WEST BRIDGE	9	10	50			S				50	9.0											50	9.	1726
10	X-BEAM PIER 2/3 WEST BRIDGE	9	8	50			S				40	0.0											40	0.	1088
11	X-BEAM PIER 2/3 WEST BRIDGE	5	16	50			S				26	10.0											26	10.	448
12	HINGE BARS PIER 2/3 WEST BR	9	122	65			S				6	3.0		9.0		0.0							6	9.	2783
13	BTWN GIRS AT PIER 2/3 WEST B	8	28	50			S				4	0.0											4	0.	299
14	AT HINGE PIER 2/3 WEST BRIDG	5	40	54			S				25	11.0											26	9.	1114
15	AT HINGE PIER 2/3 WEST BRIDG	4	72	63	T		S					6.0	4	8.5	4	8.5		6.0		6.0			10	7.	509
16	X-BEAM PIER 2/3 WEST BRIDGE	5	~~92~~ 184	61	T		S					6.0	2	11.5		6.0		0.0		0.0			3	9.	~~360~~ 720
31	PIER 4 FTG LONGIT BOT W BR	6	12	50			S				31	0.0											31	0.	559
31	PIER 1 FTG LONGIT BOT W BR	6	12	50			S				30	10.0											30	10.	556
32	PIER 1/4 FTG TRAN BOT W BR	6	121	50			S				5	8.0											5	8.	1030
33	PIER 1 BW SEAT LONG TOP W BR	6	8	50			S				29	10.0											29	10.	358
33	PIER 4 BW SEAT LONG TOP W BR	6	8	50			S				30	0.0											30	0.	360
34	PIER 1 BW SEAT LONG BOT W BR	4	4	50			S				29	8.0											29	8.	79
34	PIER 4 BW SEAT LONG BOT W BR	4	4	50			S				29	10.0											29	10.	80
35	PIER 1/4 BW SEAT STIR W BR	4	118	63	T		S				3	1.0	4	2.5	4	2.5		6.0		6.0			12	2.	959
36	PIER 1 BACKWALL LONGIT W BR	4	24	50			S				29	8.0											29	8.	476
36	PIER 4 BACKWALL LONGIT W BR	4	24	50			S				29	10.0											29	10.	478
37	PIER 1 PAVT SEAT LONGIT W BR	4	2	50			S				27	1.0											27	1.	36
37	PIER 4 PAVT SEAT LONGIT W BR	4	2	50			S				27	2.5											27	3.	36
38	PIER 1/4 BACKWALL STIR W BR	5	118	62	T		S					9.0	6	7.0	6	7.0		6.0		6.0			14	6.	1785
39	PIER 1/4 PAVT SEAT TIES W BR	4	169	61	T		S				1	3.0		6.0		6.0		0.0		0.0			2	1.	235
W1	PIER 1 WING WALL HORIZ W BR	6	5	80			S				6	0.0	9	6.0		0.0		0.0		0.0	84	0	15	7.	117
W1	PIER 1 WING WALL HORIZ W BR	6	4	80			S		V	1	6	0.0	8	6.0		0.0		0.0		0.0	84	0	14	7.	
											6	0.0	3	1.0		0.0		0.0		0.0	84	0	9	1.	71
W1	PIER 1 WING WALL HORIZ W BR	6	5	80	S						6	0.0	9	9.0		0.0		0.0		0.0	96	0	15	10.	119
W1	PIER 1 WING WALL HORIZ W BR	6	4	80			S		V	1	6	0.0	8	9.0		0.0		0.0		0.0	96	0	14	10.	
											6	0.0	3	4.0		0.0		0.0		0.0	96	0	9	4.	73
W1	PIER 4 WING WALL HORIZ W BR	6	5	80			S				6	0.0	9	6.0		0.0		9.0		0.0	81	0	15	7.	117
W1	PIER 4 WING WALL HORIZ W BR	6	4	80			S		V	1	6	0.0	8	6.0		0.0		0.0		0.0	81	0	14	7.	
											6	0.0	3	1.0		0.0		0.0		0.0	81	0	9	1.	71
W1	PIER 4 WING WALL HORIZ W BR	6	5	80			S				6	0.0	9	9.0		0.0		0.0		0.0	99	0	15	10.	119
W1	PIER 4 WING WALL HORIZ W BR	6	4	80			S		V	1	6	0.0	8	9.0		0.0		0.0		0.0	99	0	14	10.	
											6	0.0	3	4.0		0.0		0.0		0.0	99	0	9	4.	73
W2	PIERS 1/4 WING W HORIZ W BR	4	10	50			S				9	8.0											9	8.	65
W2	PIERS 1/4 WING W HORIZ W BR	4	10	50			S				9	10.0											9	10.	66
W2	PIERS 1/4 WING W HORIZ W BR	4	8	50			S		V	2	8	8.0											8	8.	
											3	3.0											3	3.	32
W2	PIERS 1/4 WING W HORIZ W BR	4	8	50			S		V	2	8	10.0											8	10.	
											3	5.0											3	5.	33
W3	PIERS 1/4 WING W VERT W BR	4	8	50			S				8	6.0											8	6.	45
W3	PIERS 1/4 WING W VERT W BR	4	24	50			S				6	9.0											6	9.	108
W3	PIERS 1/4 WING W VERT W BR	4	40	50			S		V	8	6	1.0											6	1.	
											3	5.0											3	5.	127
W4	PIERS 1/4 WING W TOP W BR	4	8	50			S				7	7.0											7	7.	41
W10	PIERS 1/4 CURB TO BKW W BR	5	8	61	T		S					9.0	2	7.0	2	7.0		0.0		0.0			5	9.	48
W11	PIERS 1/4 CURB TO BKW W BR	4	16	65	T		S					5.0		10.0		0.0							1	2.	12
W20	PIERS 1/4 GIRDER STOP W BR	4	24	50			S				1	6.0											1	6.	24
W21	PIERS 1/4 GIRDER STOP W BR	5	36	70			S				1	3.0	2	1.5	2	1.5							6	5.	241
51	W BR SLAB TRAN TOP SP 1+2+3	6	314	51							24	3.0											24	11.	11751
52	W BR SLAB TRAN BOT SP 1+2+3	6	314	50							36	0.0											36	0.	16979
53	W BR SLAB TRAN BOT SP 1+2+3	6	314	50							20	0.0											20	0.	9433
54	W BR SLAB LONG BOT SP 1+2+3	6	208	50							42	2.0											42	2.	13174
55	W BR SLAB LONG TOP SP 1+2+3	8	32	50							60	0.0											60	0.	5126
56	W BR SLAB LONG TOP SP 1	5	16	50							27	6.0											27	6.	459
57	W BR SLAB LONG TOP SP 3	5	16	50							21	2.0											21	2.	353
58	W BR SLAB LONG TOP SP 1+2+3	8	28	50							26	0.0											26	0.	1944
59	W BR SLAB LONG TOP SP 1	4	28	50							17	3.0											17	3.	323
60	W BR SLAB LONG TOP SP 2	4	42	50							18	3.0											18	3.	512
61	W BR SLAB LONG TOP SP 3	4	14	50							23	0.0											23	0.	215
62	W BR SLAB LONG TOP SP 3	4	14	50							13	8.0											13	8.	128
63	W BR SLAB LONG TOP SP 1+2+3	8	28	50							52	0.0											52	0.	3888
64	W BR SLAB LONG TOP SP 1	4	14	50							15	0.0											15	0.	140
65	W BR SLAB LONG TOP SP 2	4	28	50							17	10.0											17	10.	334
66	W BR SLAB LONG TOP SP 3	4	14	50							17	2.0											17	2.	161
67	W BR SLAB LONG TOP SP 1+2+3	8	28	50							15	0.0											15	0.	1121
68	W BR SLAB LONG TOP SP 1	4	28	50							21	3.0											21	3.	397
69	W BR SLAB LONG TOP SP 2	4	28	50							18	0.0											18	0.	337
70	W BR SLAB LONG TOP SP 2	4	14	50							24	7.0											24	7.	230
71	W BR SLAB LONG TOP SP 3	4	14	50							19	0.0											19	0.	178
72	W BR SLAB LONG TOP SP 3	4	14	50							25	8.0											25	8.	240
73	W BR SLAB TRAN TOP SP 1+2+3	6	314	51							32	4.0											33	0.	15564
74	W BR SLAB TRAN TOP SP 1+3	6	22	51					V	2	45	0.0											45	8.	
											4	0.0											4	8.	832
75	W BR SLAB TRAN BOT SP 1+2+3	6	22	50					V	2	45	0.0											45	0.	
											4	0.0											4	0.	810
81	CURB END PANELS W BR	4	20	50							13	8.0											13	8.	183
81	CURB INTERP PANEL W BR	4	80	50							16	5.0											16	5.	877
82	CURB W BR	5	432	69	T							6.0		3.5	1	3.5		6.0		6.0			2	7.	1153
83	CURB W BR	4	216	65	T							5.0	1	0.0		0.0							1	4.	192
84	RAILBASE END PANEL W BR	4	8	50							5	3.0											5	3.	28
84	RAILBASE INTERP PANEL W BR	4	72	50							8	1.0											8	1.	389
85	RAILBASE END PANEL W BR	6	8	50							5	3.0											5	3.	63
85	RAILBASE INTERP PANEL W BR	6	72	50							8	1.0											8	1.	874
86	RAILBASE W BR	5	432	65	T							8.5	2	1.5		8.5							3	4.	1502
87	RAILBASE W BR	4	216	64	T							5.0	2	1.5		5.0		0.0					2	10.	403
D1	END DIAPH PIER 1 W BR	6	14	50							28	4.0											28	4.	596

S = Bar is included in substructure quantities.
F = Bar to be field welded.
T = Tie or Stirrup
H = A.S.T.M. A-432.
V = Bar dimensions vary between dimensions shown on this line and the following line.

MARK NO.	LOCATION	SIZE	NO. REQ'D.	BEND TYPE	TIE OR STIR	FLD. WELD	SUBSTR.	A-432	VARIES	NO. EACH	U Ft.	U In.	W Ft.	W In.	X Ft.	X In.	Y Ft.	Y In.	Z Ft.	Z In.	θ1 Deg.	θ2 Deg.	LENGTH Ft.	LENGTH In.	WEIGHT Lbs.
D1	END DIAPH PIER 4 W BR	6	14	50							28	6.0											28	6.	599
D2	END DIAPH PIER 1/4 W BR	4	24	50							6	6.0											6	6.	104
D3	END DIAPH PIER 1/4 W BR	7	2	50				H			20	7.0											20	7.	84
D3	END DIAPH PIER 1/4 W BR	7	2	50				H			28	7.0											28	7.	117
D4	END DIAPH PIER 1/4 W BR	7	24	50				H			6	6.0											6	6.	319
D5	END DIAPH PIER 1/4 W BR	4	120	62	T							9.0	2	4.8	2	4.8		5.0		5.0			6	1.	485
D6	INT DIAPH SP 1,2/3 W BR	7	12	50							49	0.0											49	0.	1202
D7	INT DIAPH SP 1,2/3 W BR	8	3	50							21	3.0											21	3.	170
D7	INT DIAPH SP 1,2/3 W BR	8	3	50							29	3.0											29	3.	234
D8	INT DIAPH SP 1,2/3 W BR	11	3	50				H			21	10.0											21	10.	348
D8	INT DIAPH SP 1,2/3 W BR	11	3	50				H			29	10.0											29	10.	476
D9	INT DIAPH SP 1,2/3 W BR	4	36	50							7	6.0											7	6.	180
D10	INT DIAPH SP 1,2/3 W BR	4	180	71	T							5.0	3	3.5	3	3.5							6	9.	812

DATE	REVISION	BY	APP'D.
12-12-68	Removed Bar List Totals	G.A.R.	wrk

FED. ROAD DIV. NO.	STATE	FED. AID PROJ. NO.		SHEET NO.	TOTAL SHEETS
8	WASH.	I-405-3(308)113		122	163

BENDING DIAGRAMS

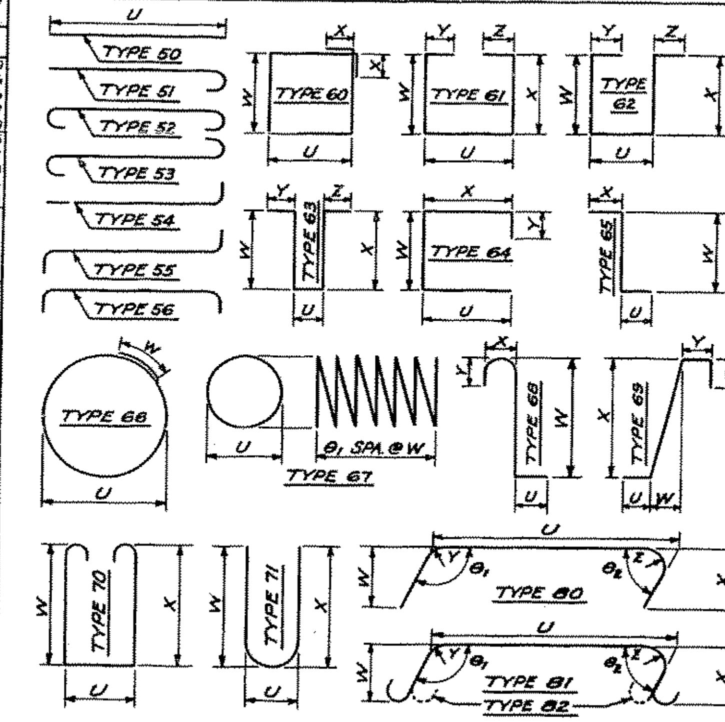

NOTE:
Bends for transverse bars due to roadway crown conditions have not been shown. These bars shall be bent as required to conform to the configuration of the structure.

SR 405 MP 18.87 TO MP 21.83
NE 100TH STREET TO NE 145TH STREET
KING COUNTY
NE 116TH STREET OVERCROSSING

BAR LIST
WEST BRIDGE

WASHINGTON STATE HIGHWAY COMMISSION
DEPARTMENT OF HIGHWAYS
OLYMPIA, WASHINGTON

APPROVED Feb. 27, 1969

CONTRACT NO. 8615 SHEET 128 OF 169 SHEETS

As Built Changes in Red 10-1-71

SR-405/51

19/42

SR 405-1500-11

S = Bar is included in substructure quantities.
F = Bar to be field welded.
T = Tie or Stirrup.
H = A.S.T.M. A-432.
V = Bar dimensions vary between dimensions shown on this line and the following line.

MARK NO.	LOCATION	SIZE	NO. REQ'D	BEND TYPE	TIE OR STIR	FLD WELD	SUBSTR.	A-432	VARIES	NO. EACH	U Ft	U In	W Ft	W In	X Ft	X In	Y Ft	Y In	Z Ft	Z In	θ_1 Deg	θ_2 Deg	LENGTH Ft	LENGTH In	WEIGHT Lbs.
1	FOOTING PIER 2/3 EAST BRIDGE	6	120	50			S				8	9.0											8	9.	1577
2	DOWELS PIER 2/3 EAST BRIDGE	9	66	80			S				6	0.0	1	6.0		0.0		4.5		0.0	90	0	7	3.	1630
3	NORTH COL PIER 2 EAST BRIDGE	9	11	50			S				18	2.0											18	2.	679
3	MID COL PIER 2 EAST BRIDGE	9	11	50			S				19	2.0											19	2.	717
3	SOUTH COL PIER 2 EAST BRIDGE	9	11	50			S				20	1.5											20	2.	753
3	NORTH COL PIER 3 EAST BRIDGE	9	11	50			S				18	5.0											18	5.	689
3	MID COL PIER 3 EAST BRIDGE	9	11	50			S				19	5.0											19	5.	726
3	SOUTH COL PIER 3 EAST BRIDGE	9	11	50			S				20	4.5											20	5.	762
4	HOOPS PIER 2/3 EAST BRIDGE	3	102	66			S				2	9.0	2	0.0									10	6.	404
5	X-BEAM PIER 2/3 EAST BRIDGE	5	92	61	T		S				3	3.0	2	11.5	2	11.5		6.0		6.0			9	9.	936
6	X-BEAM PIER 2/3 EAST BRIDGE	5	70	64	T		S					6.0	3	3.0		6.0		0.0					4	1.	295
7	X-BEAM PIER 2/3 EAST BRIDGE	11	16	50			S				51	6.0											51	6.	~~4378~~ 5417
8	X-BEAM PIER 2/3 EAST BRIDGE	9	4	50			S				14	0.0											14	0.	~~193~~ 360
9	X-BEAM PIER 2/3 EAST BRIDGE	9	10	50			S				50	9.0											50	9.	1726
10	X-BEAM PIER 2/3 EAST BRIDGE	9	8	50			S				40	0.0											40	0.	1080
11	X-BEAM PIER 2/3 EAST BRIDGE	5	16	80			S				26	10.0											26	10.	448
12	HINGE BARS PIER 2/3 EAST BR	9	122	65			S				6	3.0		9.0		0.0							6	9.	2783
13	BTWN GIRS AT PIER 2/3 EAST B	8	28	50			S				4	0.0											4	3.	299
14	AT HINGE PIER 2/3 EAST BRIDG	5	40	54			S				25	11.0											26	9.	1114
15	AT HINGE PIER 2/3 EAST BRIDG	4	72	63	T		S					6.0	4	8.5	4	8.5		6.0		6.0			10	7.	509
16	X-BEAM PIER 2/3 EAST BRIDGE	5	8 ~~92~~	61	T		S					6.0	2	11.5		6.0		0.0		0.0			3	9.	~~360~~ 720
29	BEAM SEATS PIER 1 EAST BR	4	4	50			S				25	8.0											29	8.	79
29	BEAM SEATS PIER 4 EAST BR	4	4	50			S				29	10.0											29	10.	80
30	BEAM SEATS PIER 1 EAST BR	6	8	50			S				29	10.0											29	10.	358
30	BEAM SEATS PIER 4 EAST BR	6	8	50			S				30	0.0											30	0.	360
31	FOOTINGS BOT PIER 1 E BR	6	12	50			S				30	10.0											30	10.	556
31	FOOTINGS BOT PIER 4 E BR	6	12	50			S				31	0.0											31	0.	559
32	FOOTINGS BOT PIER 1/4 E BR	6	121	50			S				5	8.0											5	8.	1030
35	X-BEAM PIER 1/4 EAST BR	4	118	83	T		S				3	1.0	4	2.5	4	2.5		6.0		6.0			12	2.	959
141	AT BACKWALL PIER 1 E BR	4	24	50			S				29	6.0											29	6.	473
141	AT BACKWALL PIER 4 E BR	4	24	50			S				29	8.0											29	8.	476
142	TOP PAVT SEAT PIER 1 E BR	4	2	50			S				27	1.0											27	1.	36
142	TOP PAVT SEAT PIER 4 E BR	4	2	50			S				27	2.0											27	2.	36
143	BACKWALL TIES PIERS 1/4 E BR	5	116	62	T		S					9.0	6	7.0	6	7.0		6.0		6.0			14	6.	1754
144	PAVT SEAT TIES PIER 1/4 E BR	4	168	64	T		S					6.0	1	3.0		6.0		0.0					2	1.	234
W1	PIER 1 WING WALL HORIZ E BR	6	5	80			S				6	0.0	9	6.0		0.0		0.0		0.0	84	0	15	7.	117
W1	PIER 1 WING WALL HORIZ E BR	6	4	80			S		V	1	6	0.0	8	6.0		0.0		0.0		0.0	84	0	14	7.	
											6	0.0	3	1.0		0.0		0.0		0.0	84	0	9	1.	71
W1	PIER 1 WING WALL HORIZ E BR	6	5	80			S				6	0.0	9	9.0		0.0		0.0		0.0	96	0	15	10.	119
W1	PIER 1 WING WALL HORIZ E BR	6	4	80			S		V	1	6	0.0	8	9.0		0.0		0.0		0.0	96	0	14	10.	
											6	0.0	3	4.0		0.0		0.0		0.0	96	0	9	4.	73
W1	PIER 4 WING WALL HORIZ E BR	6	5	80			S				6	0.0	9	6.0		0.0		0.0		0.0	82	0	15	7.	117
W1	PIER 4 WING WALL HORIZ E BR	6	4	80			S		V	1	6	0.0	8	6.0		0.0		0.0		0.0	82	0	14	7.	
											6	0.0	3	1.0		0.0		0.0		0.0	82	0	9	1.	71
W1	PIER 4 WING WALL HORIZ E BR	6	5	80			S				6	0.0	9	9.0		0.0		0.0		0.0	98	0	15	10.	119
W1	PIER 4 WING WALL HORIZ E BR	6	4	80			S		V	1	6	0.0	8	9.0		0.0		0.0		0.0	98	0	14	10.	
											6	0.0	3	4.0		0.0		0.0		0.0	98	0	9	4.	73
W2	PIERS 1/4 WING W HORIZ E BR	4	10	50			S				9	8.0											9	8.	65
W2	PIERS 1/4 WING W HORIZ E BR	4	10	50			S				9	10.0											9	10.	66
W2	PIERS 1/4 WING W HORIZ E BR	4	8	50			S		V	2	8	8.0											8	8.	
											3	3.0											3	3.	32
W2	PIERS 1/4 WING W HORIZ E BR	4	8	50			S		V	2	8	10.0											8	10.	
											3	5.0											3	5.	33
W3	PIERS 1/4 WING W VERT E BR	4	8	50			S				8	6.0											8	6.	45
W3	PIERS 1/4 WING W VERT E BR	4	24	50			S				6	9.0											6	9.	108
W3	PIERS 1/4 WING W VERT E BR	4	40	50			S		V	8	6	1.0											6	1.	
											3	5.0											3	5.	127
W4	PIERS 1/4 WING W TOP E BR	4	8	50			S				7	7.0											7	7.	41
W10	PIERS 1/4 CURB TL BKW E BR	5	8	61	T		S					9.0	2	7.0	2	7.0		0.0		0.0			5	9.	48
W11	PIERS 1/4 CURB TL BKW E BR	4	16	65	T		S					5.0		10.0		0.0							1	2.	12
W20	PIERS 1/4 GIRDER STOP E BR	4	24	50			S				1	6.0											1	6.	24
W21	PIERS 1/4 GIRDER STOP E BR	5	36	70			S				1	3.0	2	1.5	2	1.5							6	5.	241
151	E BR SLAB TRAN TOP SP 1+2+3	6	313	51							24	3.0											24	11.	11714
152	E BR SLAB TRAN BOT SP 1+2+3	6	313	50							36	0.0											36	0.	16925
153	E BR SLAB TRAN BOT SP 1+2+3	6	313	50							20	0.0											20	0.	9403
154	E BR SLAB LONG BOT SP 1+2+3	6	208	50							42	0.0											42	0.	13121
155	E BR SLAB LONG TOP SP 1+2+3	8	32	50							60	0.0											60	0.	5126
156	E BR SLAB LONG TOP SP 1	5	16	50							27	3.0											27	3.	455
157	E BR SLAB LONG TOP SP 3	5	16	50							21	0.0											21	0.	350
158	E BR SLAB LONG TOP SP 1+2+3	8	28	50							26	0.0											26	0.	1944
159	E BR SLAB LONG TOP SP 1	4	28	50							17	0.0											17	0.	318
160	E BR SLAB LONG TOP SP 2	4	42	50							18	2.0											18	2.	510
161	E BR SLAB LONG TOP SP 3	4	14	50							23	0.0											23	0.	215
162	E BR SLAB LONG TOP SP 3	4	14	50							13	6.0											13	6.	126
163	E BR SLAB LONG TOP SP 1+2+3	8	28	50							52	0.0											52	0.	3888
164	E BR SLAB LONG TOP SP 1	4	14	50							14	10.0											14	10.	139
165	E BR SLAB LONG TOP SP 2	4	28	50							17	9.0											17	9.	332
166	E BR SLAB LONG TOP SP 3	4	14	50							17	0.0											17	0.	159

S = Bar is included in substructure quantities.
F = Bar to be field welded.
T = Tie or Stirrup.
H = A.S.T.M. A-432.
V = Bar dimensions vary between dimensions shown on this line and the following line.

MARK NO.	LOCATION	SIZE	NO. REQ'D	BEND TYPE	TIE OR STIR	FLD WELD	SUBSTR.	A-432	VARIES	NO. EACH	U Ft	U In	W Ft	W In	X Ft	X In	Y Ft	Y In	Z Ft	Z In	θ_1 Deg	θ_2 Deg	LENGTH Ft	LENGTH In	WEIGHT Lbs.
167	E BR SLAB LONG TOP SP 1+2+3	8	28	50							15	0.0											15	0.	1121
168	E BR SLAB LONG TOP SP 1	4	28	50							21	2.0											21	2.	396
169	E BR SLAB LONG TOP SP 2	4	28	50							18	0.0											18	0.	337
170	E BR SLAB LONG TOP SP 2	4	14	50							24	6.0											24	6.	229
171	E BR SLAB LONG TOP SP 3	4	14	50							19	0.0											19	0.	178
172	E BR SLAB LONG TOP SP 3	4	14	50							25	6.0											25	6.	238
173	E BR SLAB TRAN TOP SP 1+2+3	6	313	51							32	3.0											32	11.	15475
174	E BR SLAB TRAN TOP SP 1+3	6	22	51					V	2	45	0.0											45	8.	
											4	0.0											4	8.	832
175	E BR SLAB TRAN BOT SP 1+3	6	22	50					V	2	45	0.0											45	0.	
											4	0.0											4	0.	810
181	CURB END PANEL E BR	4	20	50							13	5.0											13	5.	179
181	CURB INTERM PANEL E BR	4	80	50							16	5.0											16	5.	877
182	CURB E BR	5	432	69	T							6.0		3.5	1	3.5		6.0		6.0			2	7.	1153
183	CURB E BR	4	216	65	T							5.0	1	0.0		0.0							1	4.	192
184	RAILBASE END PANEL E BR	4	8	50							5	0.0											5	0.	27
184	RAILBASE INTERM PANEL E BR	4	72	50							8	1.0											8	1.	389
185	RAILBASE END PANEL E BR	6	8	50							5	0.0											5	0.	60
185	RAILBASE INTERM PANEL E BR	6	72	50							8	1.0											8	1.	874
186	RAILBASE E BR	5	432	65	T							8.5	2	1.5		8.5							3	4.	1502
187	RAILBASE E BR	4	216	64	T							5.0	2	1.5		5.0		0.0					2	10.	403
D1	END DIAPH PIER 1 E BR	6	14	50							28	3.5											28	4.	595
D1	END DIAPH PIER 4 E BR	6	14	50							28	5.5											28	6.	598
D2	END DIAPH PIER 1/4 E BR	4	24	50							6	6.0											6	6.	104
D3	END DIAPH PIER 1/4 E BR	7	2	50				H			20	7.0											20	7.	84
D3	END DIAPH PIER 1/4 E BR	7	2	50				H			28	7.0											28	7.	117
D4	END DIAPH PIER 1/4 E BR	7	24	50				H			6	6.0											6	6.	319
D5	END DIAPH PIER 1/4 E BR	4	120	62	T							9.0	2	4.8	2	4.8		5.0		5.0			6	1.	485
D6	INT DIAPH SP 1,2/3 E BR	7	12	50							49	3.0											49	3.	1208
D7	INT DIAPH SP 1,2/3 E BR	8	3	50							21	3.0											21	3.	170
D7	INT DIAPH SP 1,2/3 E BR	8	3	50							29	3.0											29	3.	234
D8	INT DIAPH SP 1,2/3 E BR	11	3	50				H			21	10.0											21	10.	348
D8	INT DIAPH SP 1,2/3 E BR	11	3	50				H			29	10.0											29	10.	476
D9	INT DIAPH SP 1,2/3 E BR	4	36	50							7	6.0											7	6.	180
D10	INT DIAPH SP 1,2/3 E BR	4	180	71	T							5.0	3	3.5	3	3.5							6	9.	812

DATE	REVISION	BY	APP'D.
4-17-69	Add bars (29), (30) (31) (32) & (35)	G.A.R.	GMW
4-17-69	Omit bars (131) thru (140) & (145) thru (149)	G.A.R.	GMW
12-12-68	Removed Bar List Totals	G.A.R.	WRK

FED. ROAD DIV. NO.	STATE	FED. AID PROJ. NO.	SHEET NO.	TOTAL SHEETS
8	WASH.	I-405-3(308)173	123	163

BENDING DIAGRAMS

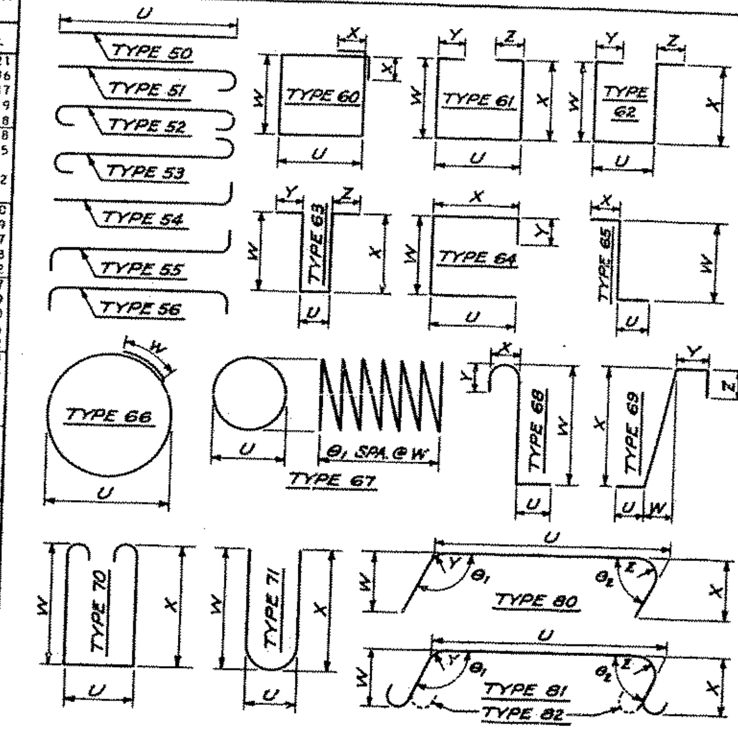

NOTE:
Bends for transverse bars due to roadway crown conditions have not been shown. These bars shall be bent as required to conform to the configuration of the structure.

SR 405 MP 18.87 TO MP 21.83
NE 100TH STREET TO NE 145TH STREET
KING COUNTY
NE 116TH STREET OVERCROSSING

BAR LIST
EAST BRIDGE

WASHINGTON STATE HIGHWAY COMMISSION
DEPARTMENT OF HIGHWAYS
OLYMPIA, WASHINGTON

APPROVED Feb. 27, 1969

CONTRACT NO. 8615 SHEET 129 OF 169 SHEETS

Bridge Design Engineer
Supervising Bridge Engr.
Designed
Design Checked

SR 405-1500-12

As Built Changes in Red 10-1-71
SR-405/51

19/41

POINTS OF MIN. VERTICAL CLEARANCE
EAST BRIDGE 15.2' @ L656+20. 4' RT.
WEST BRIDGE 15.7' @ LW656+20. 32' LT.

SEC. 28 & 33, T. 26 N., R. 5 E., W.M.

SR 405

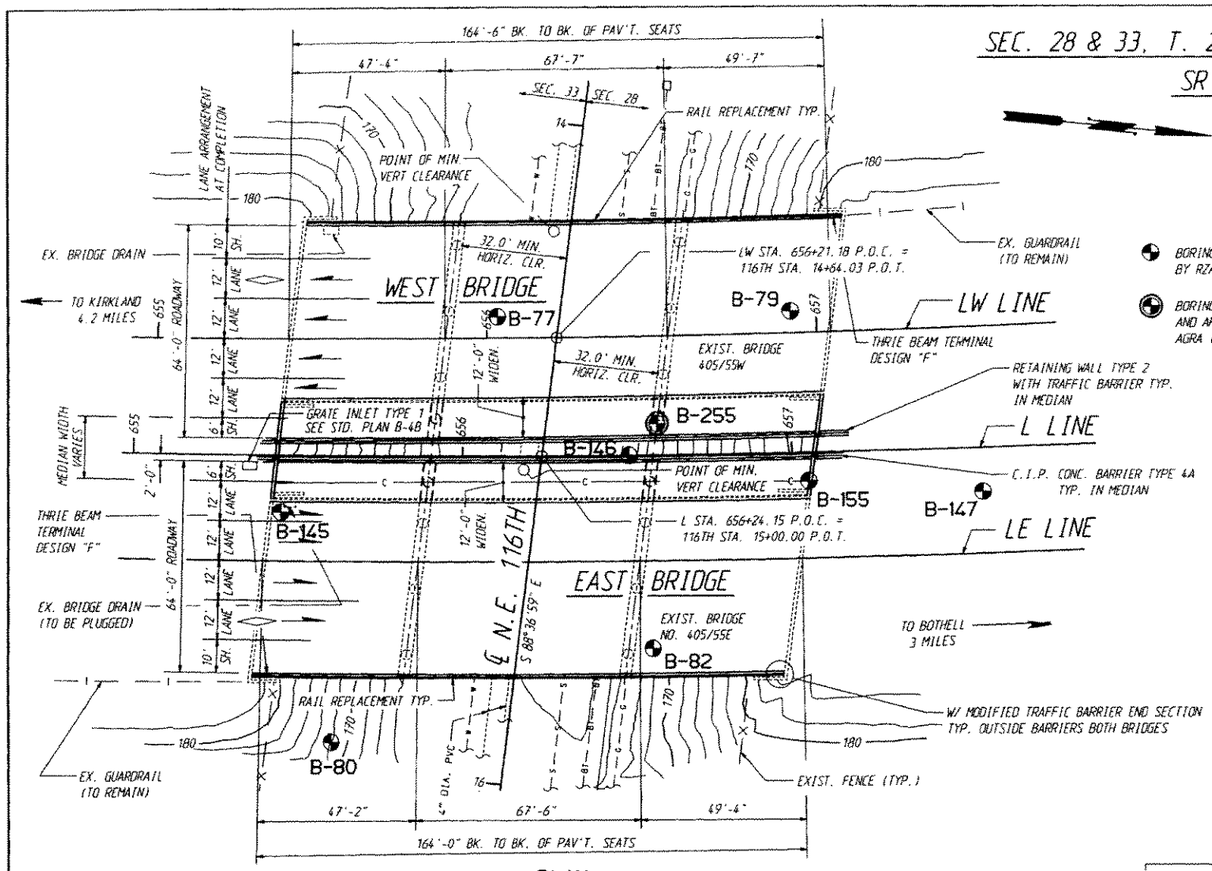

PLAN

AS BUILT T NOTE:
INSTALL TYPE 1 J BOX NORTH SIDE EXPANSION JOINT BRIDGE. 52E

BORING NUMBER AND APPROXIMATE LOCATION BY RZA AGRA (CURRENT STUDY)

BORING WITH OBSERVATION WELL NUMBER AND APPROXIMATE LOCATION BY RZA AGRA (CURRENT STUDY)

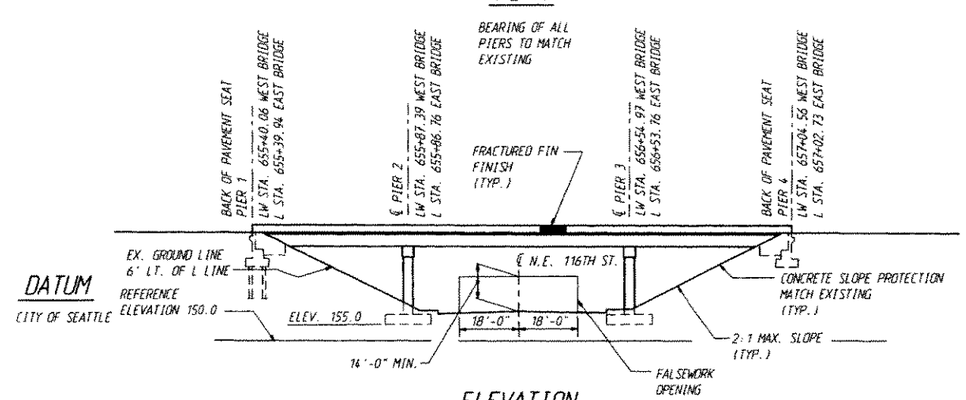

ELEVATION

WEST BRIDGE SHOWN
EAST BRIDGE SIMILIAR
FOR EMBANKMENT DETAILS, SEE STD. PLAN H-9

STATIONING FOR WEST BRIDGE IS CARRIED ON LW LINE

STATIONING FOR EAST BRIDGE IS CARRIED ON L LINE, PROJECTED TO LE LINE

GENERAL NOTES

1. ALL MATERIAL AND WORKMANSHIP SHALL BE IN ACCORDANCE WITH THE REQUIREMENTS OF THE STATE OF WASHINGTON DEPARTMENT OF TRANSPORTATION'S "STANDARD SPECIFICATIONS FOR ROAD, BRIDGES AND MUNICIPAL CONSTRUCTION", DATED 1991.

2. THE WIDENED PORTION OF THIS STRUCTURE HAS BEEN DESIGNED IN ACCORDANCE WITH THE REQUIREMENTS OF THE 1989 AASHTO SPECIFICATIONS FOR HIGHWAY BRIDGES. ALL ELEMENTS HAVE BEEN DESIGNED FOR SERVICE LOAD STRESSES AND CHECKED FOR REQUIREMENTS OF LOAD FACTOR DESIGN.

3. SEISMIC DESIGN OF THE WIDENED PORTION OF THIS STRUCTURE CONFORMS WITH THE PROVISIONS OF THE "STANDARD SPECIFICATIONS FOR SEISMIC DESIGN OF HIGHWAY BRIDGES", DATED 1983. THE SEISMIC PERFORMANCE CATEGORY IS CAT. C AND THE ACCELERATION COEFFICIENT IS 0.25.

4. FOOTING ELEVATIONS AND SUBSTRUCTURE DETAILS ARE SUBJECT TO CHANGE DEPENDING UPON FOUNDATION MATERIAL ENCOUNTERED. REINFORCING STEEL FOR FOOTING, ABUTMENTS AND COLUMNS SHALL NOT BE CUT UNTIL FINAL ELEVATIONS HAVE BEEN DETERMINED AND SUBSTRUCTURE DETAILS HAVE BEEN MODIFIED.

5. ELEVATIONS SHOWN ON THE PLANS ARE BASED ON AS-BUILT PLANS TOGETHER WITH FIELD SURVEY DATA. THE NEW STRUCTURE IS INTENDED TO MATCH THE EXISTING STRUCTURE. THEREFORE, ELEVATIONS GIVEN ON THE PLANS SHALL BE VERIFIED IN THE FIELD FOR COMPATABILITY.

6. THE CONCRETE IN THE CLOSURE POURS SHALL BE CLASS 4000 LS. ALL OTHER CAST IN PLACE CONCRETE SHALL BE CLASS 4000.

7. THE MAXIMUM DESIGN SOIL PRESSURE PER SQUARE FOOT IS 8 TONS FOR PIER 2, 3 TONS FOR PIERS 3 AND 4. THE MAXIMUM DESIGN LOAD FOR THE HP12 x 53 PILES ON PIER 1 IS 55 TONS.

8. UNLESS OTHERWISE SHOWN ON THE PLANS, THE CONCRETE COVER MEASURED FROM THE FACE OF THE CONCRETE TO THE FACE OF ANY REINFORCING BAR SHALL BE 2½" AT THE TOP OF THE ROADWAY SLAB, 1" AT THE BOTTOM OF THE ROADWAY SLAB, 2½" AT THE BOTTOM OF FOOTINGS AND 1½" AT ALL OTHER LOCATIONS, UNLESS OTHERWISE SHOWN ON THE PLANS.

CURVE DATA

	L LINE	LW LINE	
P.I. STATION	657+29.04	646+82.18	657+33.82
Δ	27°22'07" LT.	1°20'00" LT.	26°02'07" LT.
R	4297.50	8562.97	4117.88
T	1146.49	99.65	952.02
L	1852.64	199.25	1871.17
BK. TANGENT	N 6°56'10" E	N 6°56'10" E	N 5°36'10" E
de	1°20'00"		
l	200.00		
CΔ	24°42'07"		

P.C. GIRDERS (W50G)

CONTINUOUS FOR LIVE LOAD

WIDENINGS

LOADING: HS-25

OR

TWO 24 KIP AXLES @ 4' C'TRS.

AS BUILT CHANGES (3-25-98)

Bridge Design Engr.				REGION NO.	STATE	FED. AID PROJ. NO.	SHEET NO.	TOTAL SHEETS
Supervisor				10	WASH.	I-IM-405-3(791)		
Designed By H. ZHANG 8/92				JOB NUMBER 92W070				
Checked By T.H. MOORE 8/92								
Detailed By V. SCHICCHI 8/92								
Bridge Projects Engr.								
Preilm. Plan By								
Architect/Specialist	DATE	REVISION	BY	APP'D	4161			

BRIDGE AND STRUCTURES

9-9-92

Washington State Department of Transportation

[405_SSROOT:[FGB]LAYOUT.FGB.1 08-SEP-92

SR 405
NORTHUP TO BOTHEL
HOV AND SC&DI-STAGE 1
NE 116TH STREET 405/55

LAYOUT

BRIDGE SHEET NO 1

SHEET 337 OF 474 SHEETS

SR405/408

207/235

C.S. 1745 - PROJ. NO. XL0155C - DIST. NO. 1 - NORTHUP TO BOTHELL - SR 405 - BRIDGE NO. 405/55 E&W - WIDENING

SR 405 JOB NO. 7042 SHEET 1

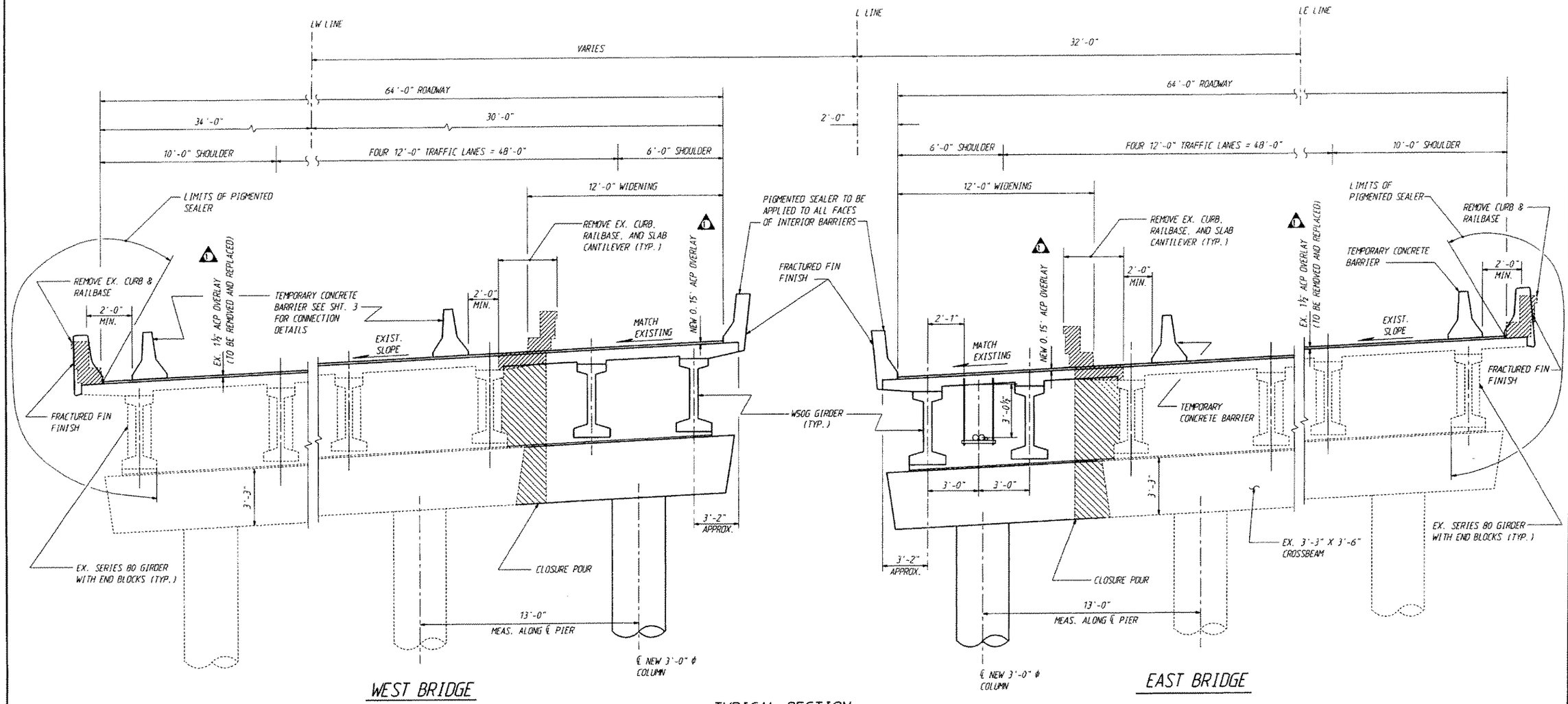

TYPICAL SECTION

SHOWN AT PIER 2 LOOKING AHEAD ON STATIONING

HORIZONTAL DIMENSIONS SHOWN ARE MEASURED RADIALLY UNLESS OTHERWISE NOTED

TRAFFIC STAGING

1. PLACE TEMPORARY TRAFFIC BARRIER.
2. REMOVE PORTION OF EXISTING STRUCTURE.
3. BUILD WIDENING (SEE BR. CONSTR. SEQ. SHT. 4)
4. MOVE TEMPORARY BARRIER.
5. REMOVE EXISTING BARRIER & REBUILD.

C.S. 1745 - PROJ. NO. XL0155C - DIST. NO. 1 - NORTHUP TO BOTHELL - SR405 - BRIDGE NO. 405/55 E&W WIDENING

SR 405 JOB NO. 7042 SHEET 2

Bridge Design Engr.	1/93				REGION NO.	STATE	FED. AID PROJ. NO.	SHEET NO.	TOTAL SHEETS
Supervisor	1-93				10	WASH.			
Designed By H. ZHANG	8/92				JOB NUMBER				
Checked By T.M. MOORE	8/92								
Detailed By V. SCHICCHI	8/92								
Bridge Projects Engr.									
Prelim. Plan By	1/93	1 EDITORIAL CHANGES		N	4161				
Architect/Specialist	DATE	REVISION		BY	APP'D				

BRIDGE AND STRUCTURES

H. WINT LWIN — STATE OF WASHINGTON — PROFESSIONAL ENGINEER — EXPIRES 1/17/93

9-9-92

I405_SSROOT:\FGB\LAYOUT1.FGB:1 25-JAN-93

Washington State Department of Transportation

SR 405
NORTHUP TO BOTHEL
HOV AND SCADI-STAGE 1
NE 116TH STREET 405/55

LAYOUT

BRIDGE SHEET NO. 2

SHEET 338 OF 474 SHEETS

SR405/408

207/234

WEST BRIDGE ELEVATIONS

LW LINE	OFFSET	ELEVATION
655+38.0	18.0' RT	183.49
655+40	18.0' RT	183.53
655+50	18.0' RT	183.67
655+60	18.0' RT	183.76
655+70	18.0' RT	183.85
655+80	18.0' RT	183.96
655+90	18.0' RT	184.00
656+00	18.0' RT	184.10
656+10	18.0' RT	184.17
656+20	18.0' RT	184.24
656+30	18.0' RT	184.29
656+40	18.0' RT	184.35
656+50	18.0' RT	184.41
656+60	18.0' RT	184.47
656+70	18.0' RT	184.55
656+80	18.0' RT	184.58
656+90	18.0' RT	184.65
657+00	18.0' RT	184.69
657+02.0	18.0' RT	184.68
655+38.7	12.0' RT	183.22
655+40	12.0' RT	183.25
655+50	12.0' RT	183.35
655+60	12.0' RT	183.46
655+70	12.0' RT	183.55
655+80	12.0' RT	183.65
655+90	12.0' RT	183.71
656+00	12.0' RT	183.79
656+10	12.0' RT	183.87
656+20	12.0' RT	183.94
656+30	12.0' RT	184.00
656+40	12.0' RT	184.04
656+50	12.0' RT	184.09
656+60	12.0' RT	184.17
656+70	12.0' RT	184.25
656+80	12.0' RT	184.29
656+90	12.0' RT	184.34
657+00	12.0' RT	184.43
657+02.5	12.0' RT	184.42

LW LINE	OFFSET	ELEVATION
655+42.8	24.0' LT	181.42
655+50	24.0' LT	181.48
655+60	24.0' LT	181.57
655+70	24.0' LT	181.68
655+80	24.0' LT	181.77
655+90	24.0' LT	181.80
656+00	24.0' LT	181.92
656+10	24.0' LT	182.00
656+20	24.0' LT	182.09
656+30	24.0' LT	182.18
656+40	24.0' LT	182.23
656+50	24.0' LT	182.26
656+60	24.0' LT	182.34
656+70	24.0' LT	182.40
656+80	24.0' LT	182.48
656+90	24.0' LT	182.54
657+00	24.0' LT	182.57
657+07.9	24.0' LT	182.63
655+44.0	34.0' LT	180.98
655+50	34.0' LT	180.92
655+60	34.0' LT	181.12
655+70	34.0' LT	181.22
655+80	34.0' LT	181.28
655+90	34.0' LT	181.36
656+00	34.0' LT	181.49
656+10	34.0' LT	181.56
656+20	34.0' LT	181.67
656+30	34.0' LT	181.73
656+40	34.0' LT	181.77
656+50	34.0' LT	181.84
656+60	34.0' LT	181.91
656+70	34.0' LT	181.95
656+80	34.0' LT	182.08
656+90	34.0' LT	182.15
657+00	34.0' LT	182.14
657+09.3	34.0' LT	182.18

EAST BRIDGE ELEVATIONS

L LINE	OFFSET	ELEVATION
655+41.3	14.0' RT	181.56
655+50	14.0' RT	181.58
655+60	14.0' RT	181.65
655+70	14.0' RT	181.73
655+80	14.0' RT	181.77
655+90	14.0' RT	181.77
656+00	14.0' RT	181.82
656+10	14.0' RT	181.86
656+20	14.0' RT	181.91
656+30	14.0' RT	181.95
656+40	14.0' RT	181.97
656+50	14.0' RT	182.00
656+60	14.0' RT	182.00
656+70	14.0' RT	182.05
656+80	14.0' RT	182.11
656+90	14.0' RT	182.18
657+00	14.0' RT	182.25
657+04.7	14.0' RT	182.16
655+40.8	20.0' RT	181.85
655+50	20.0' RT	181.93
655+60	20.0' RT	181.99
655+70	20.0' RT	182.04
655+80	20.0' RT	182.07
655+90	20.0' RT	182.08
656+00	20.0' RT	182.11
656+10	20.0' RT	182.16
656+20	20.0' RT	182.18
656+30	20.0' RT	182.22
656+40	20.0' RT	182.25
656+50	20.0' RT	182.29
656+60	20.0' RT	182.31
656+70	20.0' RT	182.35
656+80	20.0' RT	182.39
656+90	20.0' RT	182.44
657+00	20.0' RT	182.44
657+03.8	20.0' RT	182.45

L LINE	OFFSET	ELEVATION
655+37.0	56.0' RT	183.64
655+40	56.0' RT	183.66
655+50	56.0' RT	183.72
655+60	56.0' RT	183.73
655+70	56.0' RT	183.76
655+80	56.0' RT	183.79
655+90	56.0' RT	183.83
656+00	56.0' RT	183.89
656+10	56.0' RT	183.95
656+20	56.0' RT	183.97
656+30	56.0' RT	184.01
656+40	56.0' RT	184.03
656+50	56.0' RT	184.03
656+60	56.0' RT	184.06
656+70	56.0' RT	184.08
656+80	56.0' RT	184.10
656+90	56.0' RT	184.14
656+98.7	56.0' RT	184.15
655+36.0	66.0' RT	184.14
655+40	66.0' RT	184.23
655+50	66.0' RT	184.27
655+60	66.0' RT	184.29
655+70	66.0' RT	184.30
655+80	66.0' RT	184.33
655+90	66.0' RT	184.37
656+00	66.0' RT	184.45
656+10	66.0' RT	184.51
656+20	66.0' RT	184.53
656+30	66.0' RT	184.56
656+40	66.0' RT	184.59
656+50	66.0' RT	184.59
656+60	66.0' RT	184.59
656+70	66.0' RT	184.61
656+80	66.0' RT	184.63
656+90	66.0' RT	184.66
656+97.4	66.0' RT	184.65

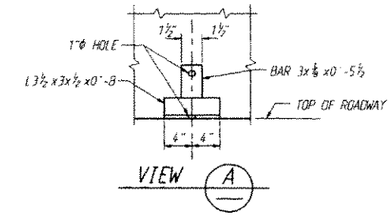

NOTES:
1. SHIMS MAY BE REQUIRED TO FIT THE BRACKET TO THE TEMPORARY CONCRETE BARRIER AND ROADWAY SURFACE.
2. LOCATION OF ANCHORS IS TO BE ADJUSTED TO MISS THE MAIN REINFORCING IN THE DECK WHEN DRILLING HOLES.
3. PROVIDE TWO (2) ANCHOR ASSEMBLIES FOR EACH SECTION OF THE TEMPORARY CONCRETE BARRIER ON THE ROADWAY SURFACE.
4. FOR DETAILS NOT SHOWN, SEE STANDARD C-8.
5. LOCATE ANCHORS APPROXIMATELY 2'-6" FROM BOTH ENDS OF EACH SECTION.
6. AFTER REMOVING THE TEMPORARY CONCRETE BARRIER, CLEAN AND FILL BOLT HOLES WITH A 2:1 SAND/CEMENT GROUT BY VOLUME.

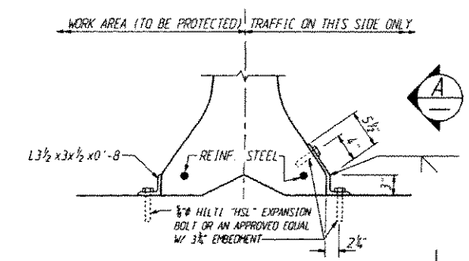

ANCHOR ASSEMBLY DETAIL

SR 405 JOB NO. 7042 SHEET 3

Bridge Design Engr.					
Supervisor					
Designed By H. ZHANG 8/92					
Checked By T.M. MOORE 8/92					
Detailed By V. SCHICCHI 8/92					
Bridge Projects Engr.					
Prelim. Plan By					
Architect/Specialist	DATE	REVISION	BY	APP'D	

REGION NO.	STATE	FED. AID PROJ. NO.	SHEET NO.	TOTAL SHEETS
10	WASH.	I-IM-405-3(791)		
JOB NUMBER 92W070				
4/61				

BRIDGE AND STRUCTURES

9-9-92

1405_55ROOT:(FGB)LAYOUT2.FGB: 1 28-AUG-92

Washington State Department of Transportation

SR 405
NORTHUP TO BOTHEL
HOV AND SC&DI-STAGE 1
NE 116TH STREET 405/55

LAYOUT

BRIDGE SHEET NO. 3

SHEET 339 OF 474 SHEETS

SR405/408

207/233

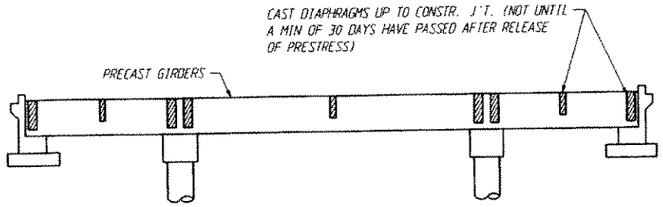

STAGE 1 - POUR DIAPHRAGMS & PLACE REINF.

1. CONSTRUCT PIER 1 & 4, FOOTINGS, COLUMNS AND XBEAMS AT PIERS 2 & 3.
2. RELEASE ALL FALSEWORK UNDER PIERS 2 & 3 X-BEAMS.
3. SET P.S. GIRDERS IN PLACE. CAST INTERMEDIATE AND END DIAPHRAGMS. ALLOW 3 DAYS FOR CURING AND 3000 PSI MIN. STRENGTH BEFORE CASTING OF ROADWAY SLAB (STAGE 2).

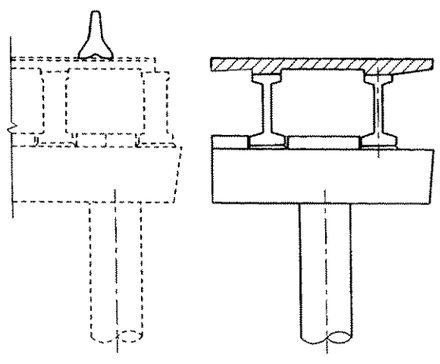

STAGE 2 - CAST ROADWAY SLAB

1. CAST ROADWAY SLAB. ALLOW 10 DAYS AND 3000 PSI COMPRESSIVE STRENGTH BEFORE STRIPPING DECK FORMS.

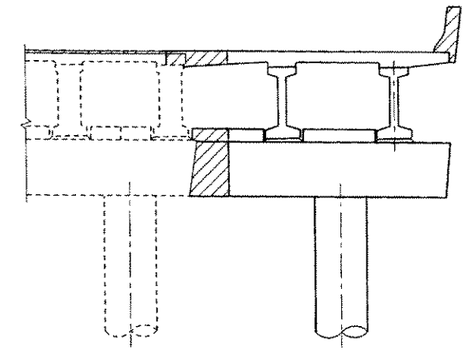

STAGE 3

1. POUR X-BEAM AND DIAPHRAGM CLOSURE POURS. ALLOW 24 HOURS FOR CURING BEFORE SLAB CLOSURE IS COMPLETED.
2. ALLOW 10 DAYS & 4000 PSI PRIOR TO CASTING THE TRAFFIC BARRIER
3. INSTALL EXPANSION JOINTS AND OVERLAY.

NOTE: TRAFFIC BARRIER END SECTIONS SHALL BE POURED AFTER EXPANSION J'T. INSTALLATION, AT PIERS 1 & 4.

SR 405 JOB NO. 7042 SHEET 4

Bridge Design Engr. M. Myint Lwin 9-92					REGION NO.	STATE	FED. AID PROJ. NO.	SHEET NO.	TOTAL SHEETS	BRIDGE AND STRUCTURES
Supervisor Y.F. Chan 9-92					10	WASH.	I-IM-405-3(791)			
Designed By H. ZHANG 8/92					JOB NUMBER 92W070					
Checked By T.M. MOORE 8/92										
Detailed By V. SCHICCHI 8/92										
Bridge Projects Engr.										
Prelim. Plan By										
Architect/Specialist	DATE	REVISION	BY	APP'D	4161					

M. MYINT LWIN, STATE OF WASHINGTON, REGISTERED PROFESSIONAL ENGINEER, EXPIRES 1/17/93

9-9-92

I405_55ROOT:(FGB)CONST_SEQ.FGB:1 08-SEP-92

Washington State Department of Transportation

SR 405
NORTHUP TO BOTHEL
HOV AND SC&DI-STAGE 1
NE 116TH STREET 405/55

BRIDGE CONSTRUCTION SEQUENCE

BRIDGE SHEET NO. 4

SHEET 340 OF 474 SHEETS

SR405/408

207/232

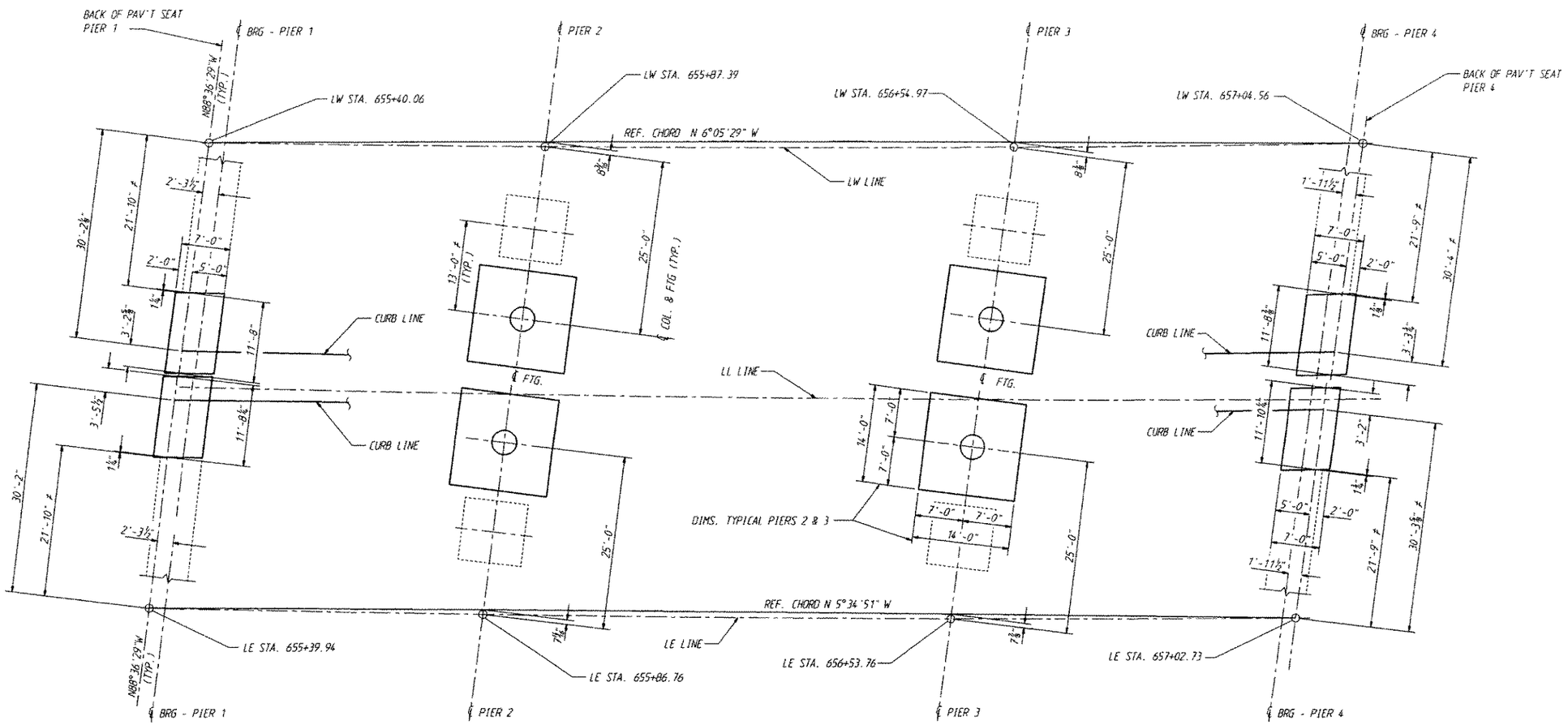

FOUNDATION PLAN

≠ DIMENSIONS TO BE VERIFIED IN FIELD

Bridge Design Engr.					REGION NO.	STATE	FED. AID PROJ. NO.	SHEET NO.	TOTAL SHEETS
Supervisor					10	WASH.			
Designed By H. ZHANG 8/92					JOB NUMBER				
Checked By T.M. MOORE 8/92					92W070		I-IM-405-3(791)		
Detailed By V. SCHICCHI 8/92									
Bridge Projects Engr.									
Prelim. Plan By									
Architect/Specialist	DATE	REVISION	BY	APP'D	4161				

BRIDGE AND STRUCTURES

9-9-92

1405_55ROOT:(FGB)FOOTING_PLAN.FGB:1 31-AUG-92

Washington State Department of Transportation

SR 405
NORTHUP TO BOTHEL
HOV AND SC&DI-STAGE 1
NE 116TH STREET 405/55

FOUNDATION PLAN

BRIDGE SHEET NO. 5

SHEET 341 OF 474 SHEETS

SR 405 JOB NO. 7042 SHEET 5

SR405/408

207/231

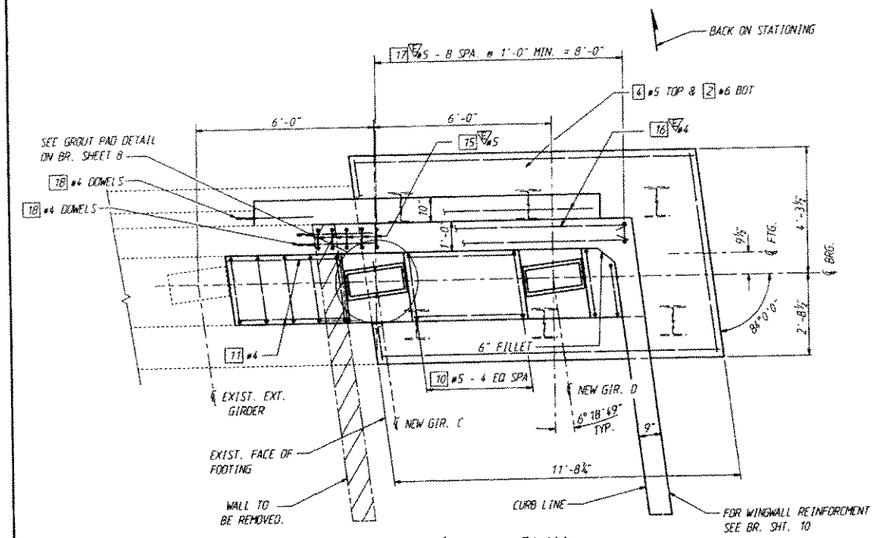

PLAN

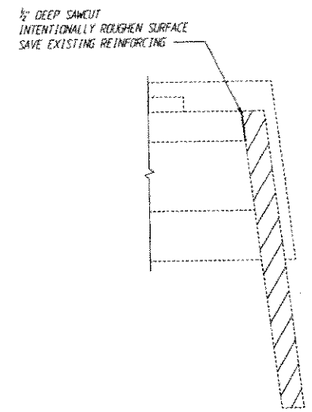

REMOVAL WINGWALL DETAIL
TYP. ALL END PIERS

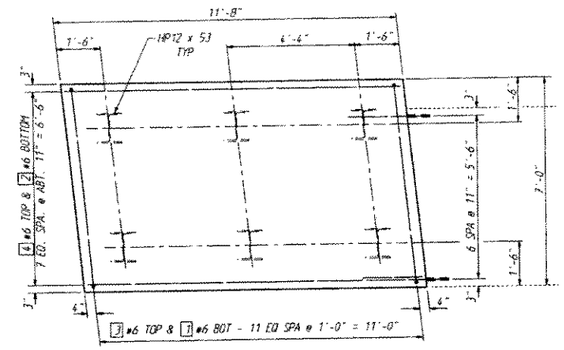

FOOTING PLAN REINFORCING

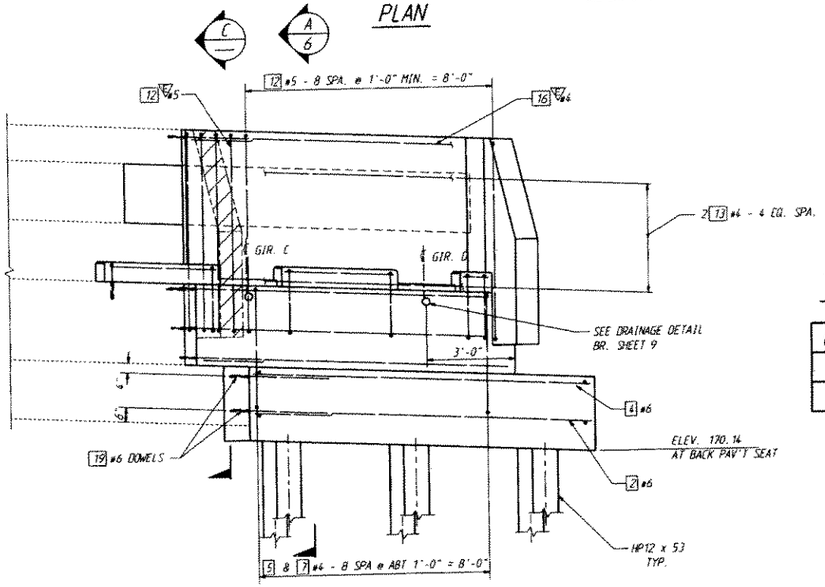

ELEVATION
LOOKING BACK ON STATIONING

TOP OF GROUT PAD ELEVATIONS

GIRDER	ELEV.
C	176.05
D	175.81

ELEVATIONS SHALL BE VERIFIED IN FIELD.

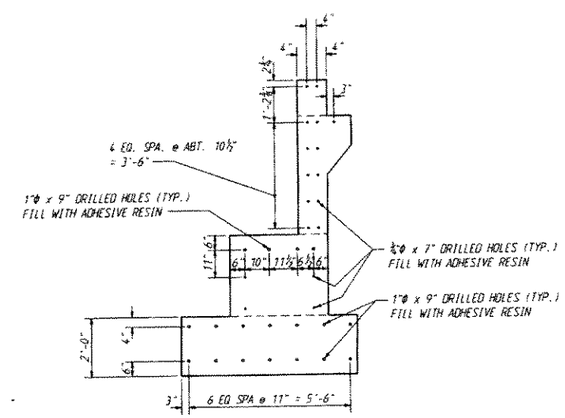

SECTION C/6

Bridge Design Engr.				REGION NO.	STATE	FED. AID PROJ. NO.	SHEET NO.	TOTAL SHEETS	BRIDGE AND STRUCTURES
Supervisor				10	WASH	I-IM-405-3(791)			
Designed By H. ZHANG 8/92				JOB NUMBER 92W070					
Checked By T.M. MOORE 8/92									
Detailed By V. SCHICCHI 8/92									
Bridge Projects Engr.									
Prelim. Plan By									
Architect/Specialist	DATE	REVISION	BY	APP'D	4/61				

9-9-92

1405_SSROOT:(FGB)PIER1_EB.FGB:1 31-AUG-92

Washington State Department of Transportation

SR 405
NORTHUP TO BOTHEL
HOV AND SC&DI-STAGE 1
NE 116TH STREET 405/55

PIER 1 - EAST BRIDGE

BRIDGE SHEET NO. 7
SHEET 343 OF 474 SHEETS

SR 405 JOB NO. 7042 SHEET 7

SR405/408

207/229

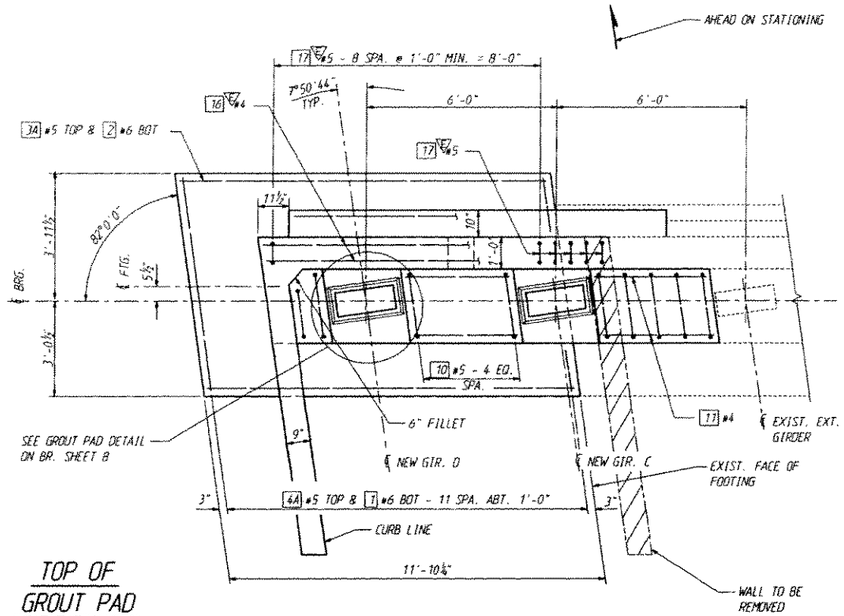

TOP OF GROUT PAD ELEVATIONS

GIRDER	ELEV.
C	176.69
D	176.40

PLAN

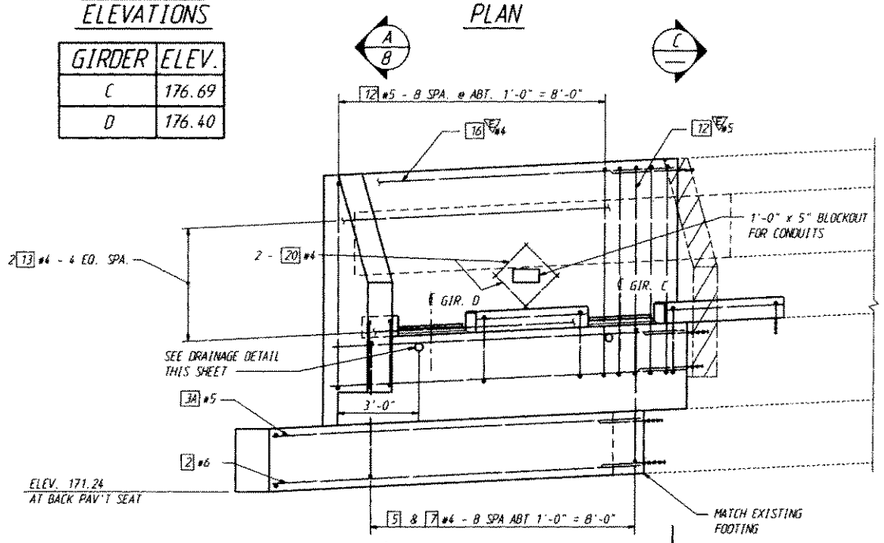

ELEVATION

LOOKING AHEAD ON STATIONING

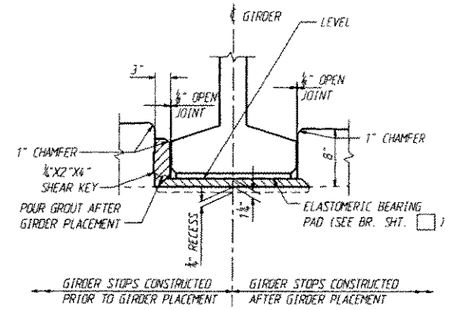

GIRDER SEAT GROUTING DETAIL

NOTE:
GIRDER STOPS MAY BE CONSTRUCTED PRIOR TO GIRDER PLACEMENT OR CONSTRUCTED AFTER GIRDER PLACEMENT. THE SAME METHOD SHALL BE USED FOR EACH PIER.
TYPICAL AT PIERS 1 & 4 EAST & WEST BRIDGES.

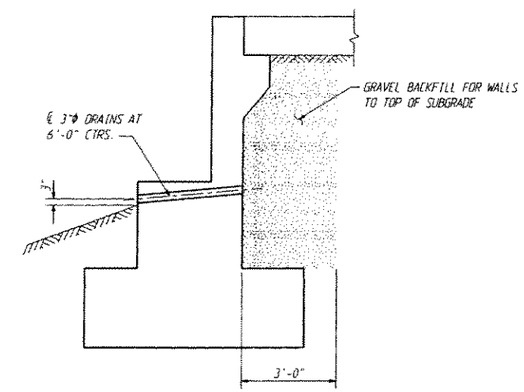

DRAINAGE DETAIL

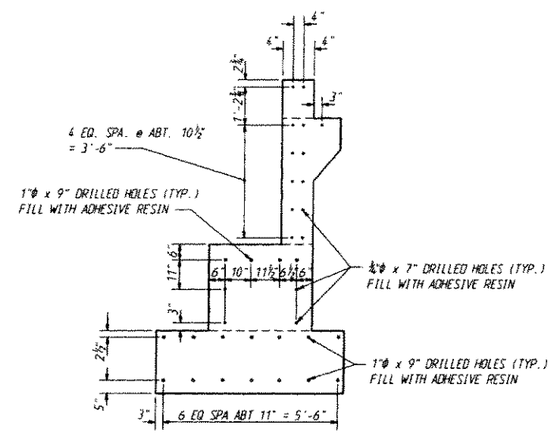

SECTION C

SR 405 JOB NO. 7042 SHEET 9

Bridge Design Engr.					REGION NO.	STATE	FED. AID PROJ. NO.	SHEET NO.	TOTAL SHEETS
Supervisor					10	WASH.	I-IM-405-3(791)		
Designed By H. ZHANG 8/92					JOB NUMBER 92W070				
Checked By T.M. MOORE 8/92									
Detailed By V. SCHICCHI 8/92									
Bridge Projects Engr.									
Prelim. Plan By									
Architect/Specialist	DATE	REVISION	BY	APP'D	4161				

BRIDGE AND STRUCTURES

9-9-92

I405_55ROOT:(FGB)PIER4_EB.FGB:1 31-AUG-92

Washington State Department of Transportation

SR 405
NORTHUP TO BOTHEL
HOV AND SC&DI-STAGE 1
NE 116TH STREET 405/55

PIER 4 - EAST BRIDGE

BRIDGE SHEET NO. 9
SHEET 345 OF 474 SHEETS

BLOCKOUT FOR CONDUITS 1'-0" x 5"

SR405/408

207/227

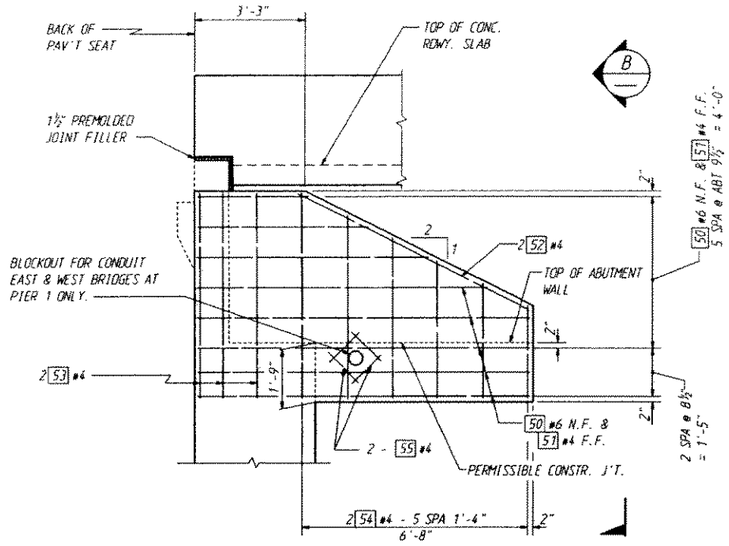

WING WALL - ELEVATION

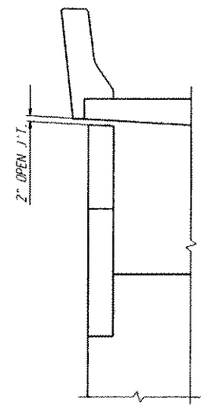

VIEW B

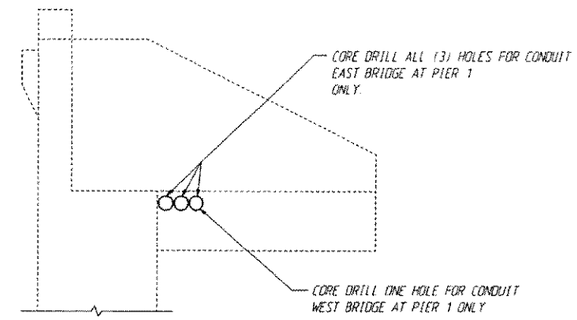

EXISTING WING WALLS

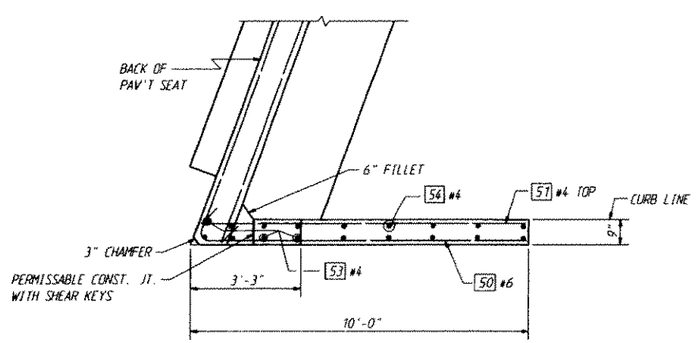

WING WALL - PLAN

SR 405 JOB NO. 7042 SHEET 10

Bridge Design Engr. Myint Lwin 9-92					REGION NO.	STATE	FED. AID PROJ. NO.	SHEET NO.	TOTAL SHEETS	BRIDGE AND STRUCTURES
Supervisor Y.F. Chan 9-92					10	WASH.	I-IM-405-3(791)			
Designed By H. ZHANG 8/92					JOB NUMBER 92W070					
Checked By T.M. MOORE 8/92										
Detailed By V. SCHICCHI 8/92										
Bridge Projects Engr.										
Prelim. Plan By										
Architect/Specialist	DATE	REVISION	BY	APP'D	4161					

H. MYINT LWIN, STATE OF WASHINGTON, REGISTERED PROFESSIONAL ENGINEER, EXPIRES 1/17/93

9-9-92

I405_55ROOT:[FGB]W_WALL.FGB;1 31-AUG-92

Washington State Department of Transportation

SR 405
NORTHUP TO BOTHEL
HOV AND SC&DI-STAGE 1
NE 116TH STREET 405/55

WING WALL DETAILS

BRIDGE SHEET NO. 10

SHEET 346 OF 474 SHEETS

SR405/408

207/226

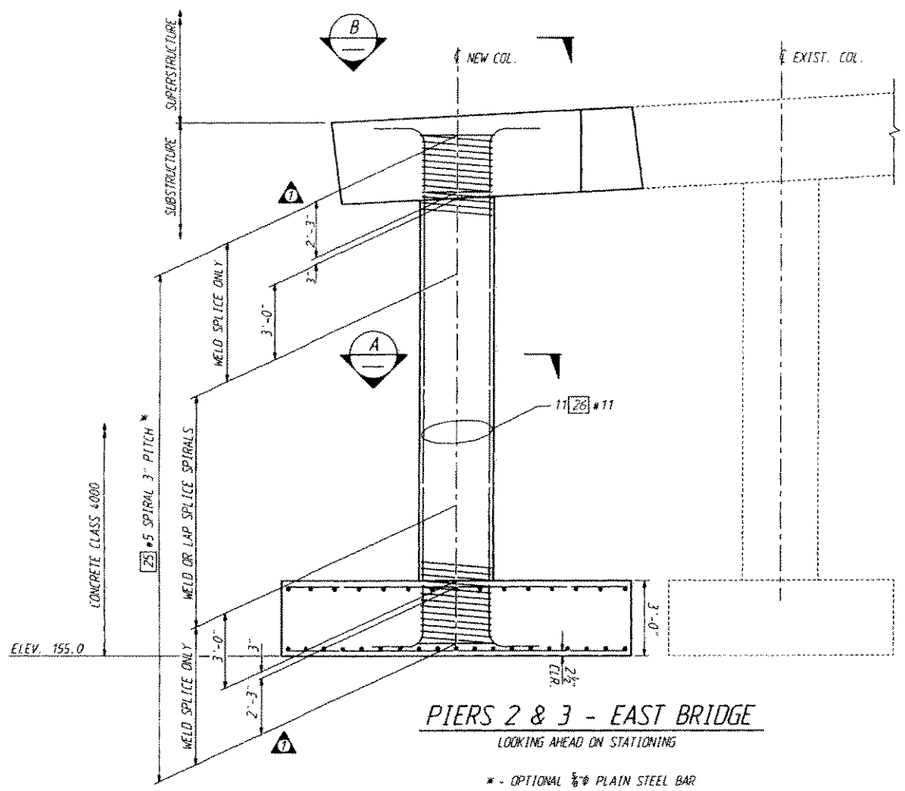

PIERS 2 & 3 - EAST BRIDGE

LOOKING AHEAD ON STATIONING

* - OPTIONAL ⅝"Φ PLAIN STEEL BAR OR W31 COLD DRAWN WIRE

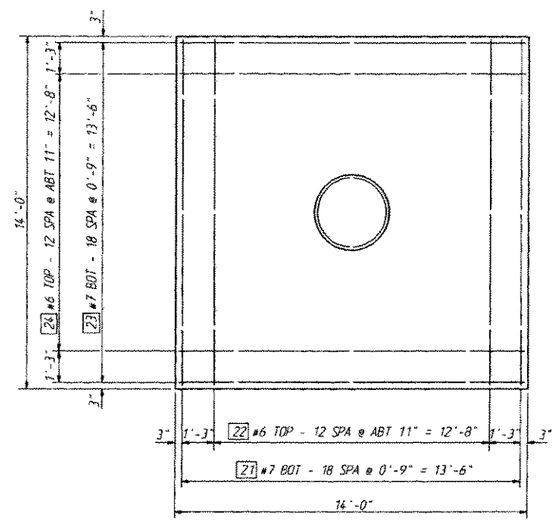

FOOTING PLAN REINFORCING

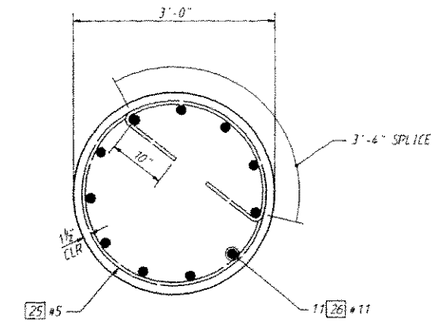

SECTION A

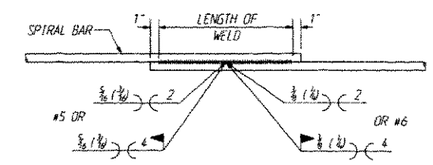

WELDED LAP SPLICE DETAIL

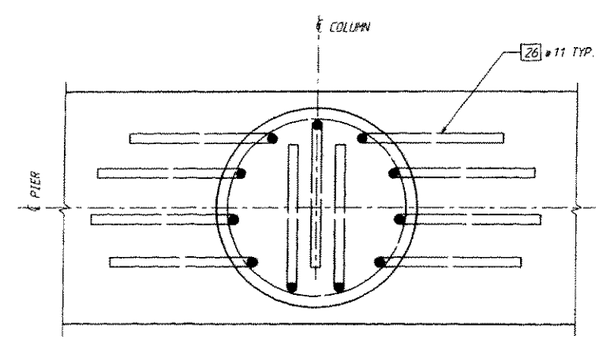

SECTION B

REBAR AT TOP OF COLUMN

Bridge Design Engr.					
Supervisor					
Designed By H. ZHANG 8/92					
Checked By T.M. MOORE 8/92					
Detailed By V. SCHICCHI 8/92					
Bridge Projects Engr.					
Prelim. Plan By	10/92	1 CHANGED COLUMN SPIRAL LOCATIONS	HZ		
Architect/Specialist	DATE	REVISION	BY	APP'D	

REGION NO.	STATE	FED. AID PROJ. NO.	SHEET NO.	TOTAL SHEETS
10	WASH.	I-IM-405-3(791)		
JOB NUMBER 92W070				
4161				

BRIDGE AND STRUCTURES

10.10.92

ALLAN H. WALLEY — STATE OF WASHINGTON — REGISTERED PROFESSIONAL ENGINEER — EXPIRES 12/15/93

I405_55ROOT:(FGB)PRS_COL_FTGS.FGB:1 07-OCT-92

Washington State Department of Transportation

SR 405
NORTHUP TO BOTHEL
HOV AND SC&DI-STAGE 1
NE 116TH STREET 405/55

PIER COLUMNS & FOOTINGS - EAST BRIDGE

BRIDGE SHEET NO. 12

SHEET 348 OF 414 SHEETS

SR405/408

207/224

SR 405 JOB NO. 7042 SHEET 12

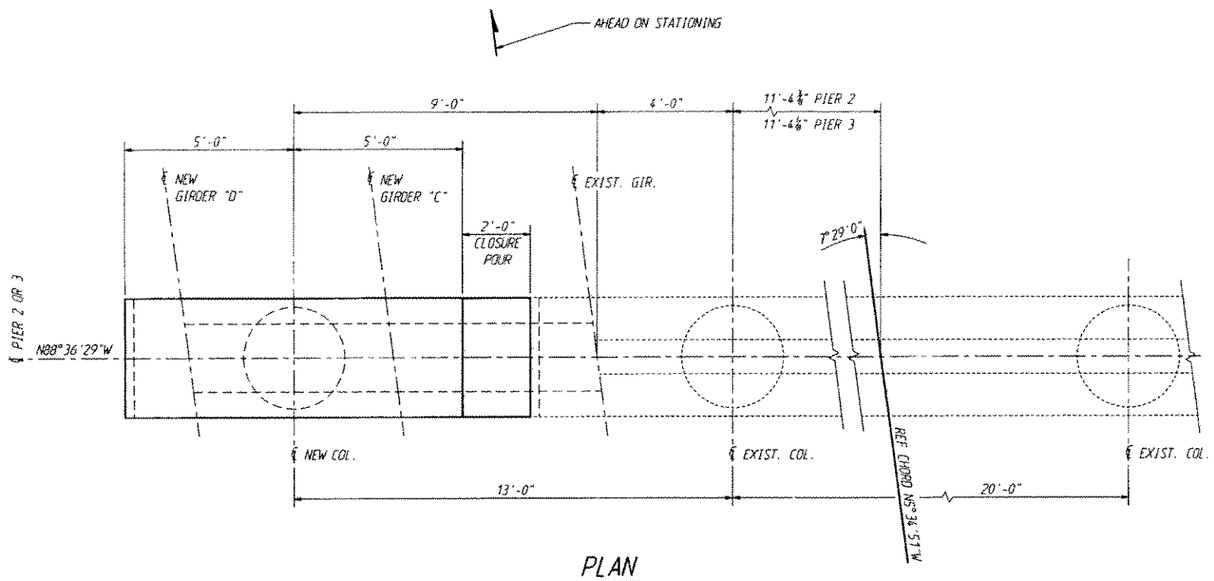

PLAN

DIMS MEASURED ALONG ℄ OF PIER

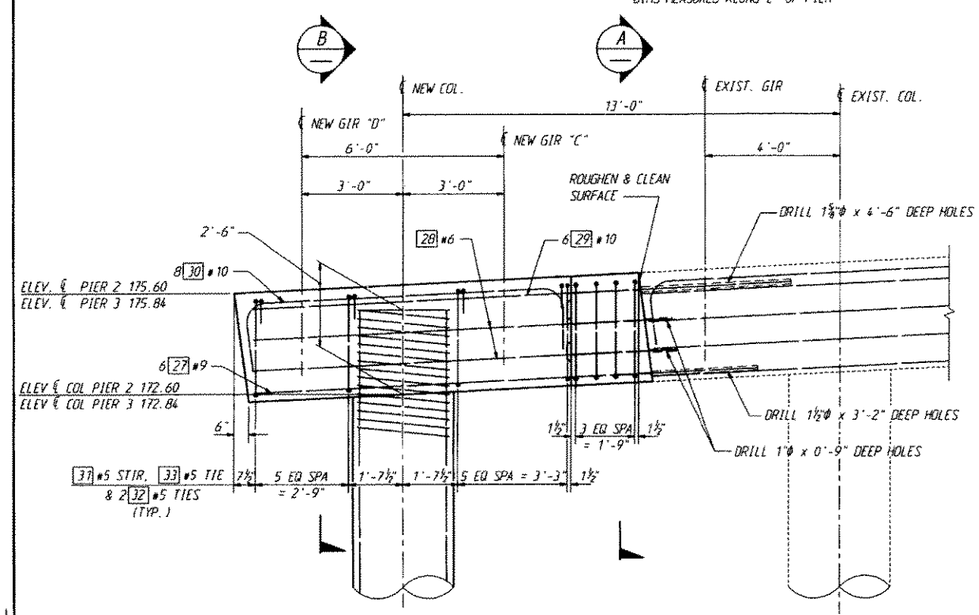

ELEVATION

CONSTRUCTION NOTES:

1.) LOCATE EXISTING BARS WITH PACHOMETER PRIOR TO DRILLING.

2.) CARE SHALL BE TAKEN NOT TO DAMAGE EXISTING REINFORCING.

3.) REBARS TO BE DOWELED INTO EXISTING STRUCTURE SHALL BE SET IN EPOXY RESIN.

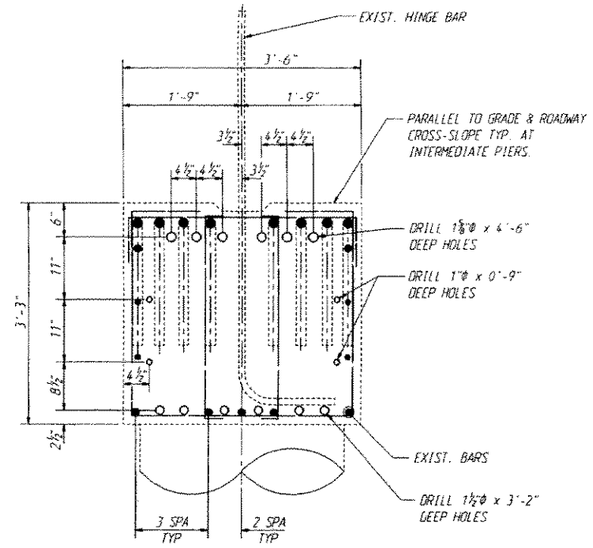

SECTION A

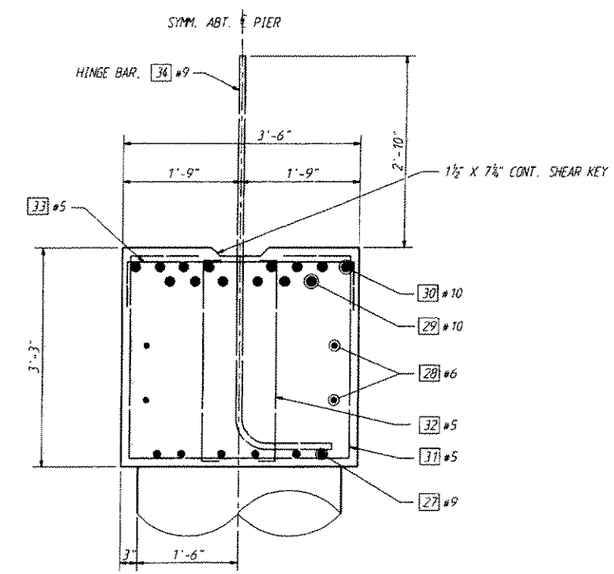

SECTION B

SR 405 JOB NO. 7042 SHEET 14

Bridge Design Engr.					REGION NO.	STATE	FED. AID PROJ. NO.	SHEET NO.	TOTAL SHEETS
Supervisor					10	WASH.			
Designed By H. ZHANG 8/92					JOB NUMBER 92W070		I-IM-405-3(791)		
Checked By T.M. MOORE 8/92									
Detailed By V. SCHICCHI 8/92									
Bridge Projects Engr.									
Prelim. Plan By									
Architect/Specialist	DATE	REVISION	BY	APP'D	4161				

BRIDGE AND STRUCTURES

9-9-92

I405_55ROOT:(FGB)XBEAM_PRS2_3.FGB:1 31-AUG-92

Washington State Department of Transportation

SR 405
NORTHUP TO BOTHEL
HOV AND SC&DI-STAGE 1
NE 116TH STREET 405/55

PIER 2 & 3 X-BEAM - EAST BRIDGE

BRIDGE SHEET NO. 14

SHEET 350 OF 474 SHEETS

SR405/408

207/222

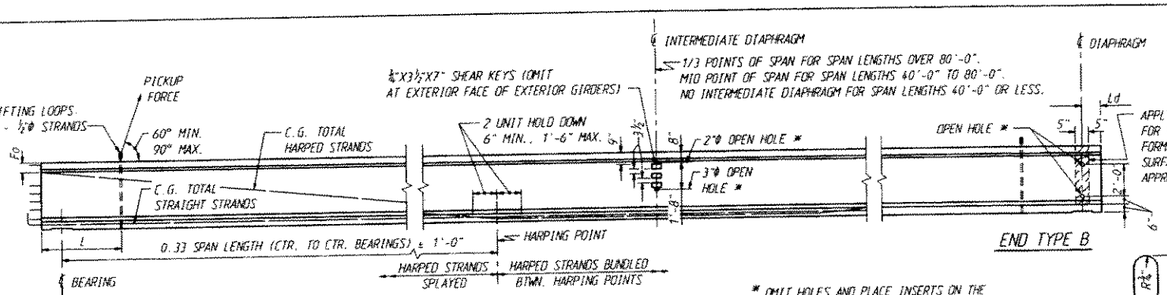

GIRDER ELEVATION

* OMIT HOLES AND PLACE INSERTS ON THE INTERIOR FACE OF EXTERIOR GIRDERS. PLACE HOLES AND INSERTS PARALLEL TO SKEW. INSERTS SHALL BE 1" RICHMOND ROCKET, BURKE HI-TENSILE, LANCASTER MALLEABLE OR APPROVED EQUAL.

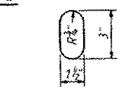

OPEN HOLE

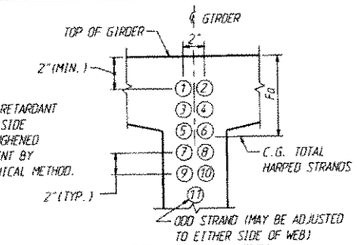

STRAND PATTERN AT GIRDER END

HARPED STRAND LOCATION SEQUENCE SHALL BE AS SHOWN ①, ② ETC.

NOTES:
ALL DETAILS ON THIS SHEET ARE FOR PRETENSIONED DESIGN ONLY.

PLAN LENGTH SHALL BE INCREASED AS NECESSARY TO COMPENSATE FOR SHORTENING DUE TO PRESTRESS AND SHRINKAGE.

EXTRA CAUTION MUST BE EXERCISED IN HANDLING AND PLACING ALL GIRDERS.

ALL GIRDERS OVER 100' LONG SHALL BE BRACED LATERALLY TO PREVENT TIPPING OR BUCKLING.

THE TOP SURFACE OF THE GIRDER FLANGE SHALL BE ROUGHENED IN ACCORDANCE WITH SECTION 6-02.3(25)H OF THE STANDARD SPECIFICATIONS.

IF THE LIFTING LOOPS EXTEND WITHIN 3" OF THE TOP OF THE ROADWAY SLAB THEY SHALL BE CUT OFF PRIOR TO POURING THE ROADWAY SLAB. ALL LIFTING STRANDS SHALL BE OF THE SAME MATERIAL AND STRENGTH AS THE PRESTRESSING STRANDS. WRAP THE LIFTING LOOPS SO THAT EACH STRAND WILL CARRY 1/5 SHARE OF THE TOTAL LOAD. EXTEND LIFTING LOOPS ENDING WITH A 9" LONG 90° HOOK TO WITHIN 3" CLEAR OF THE BOTTOM OF THE GIRDER.

CUT ALL STRANDS FLUSH WITH THE GIRDER ENDS AND PAINT WITH AN APPROVED EPOXY RESIN EXCEPT FOR EXTENDED STRANDS AS SHOWN.

FORMS FOR BEARING PAD RECESSES SHALL BE CONSTRUCTED AND FASTENED IN SUCH A MANNER AS NOT TO CAUSE DAMAGE TO THE GIRDER DURING THE STRAND RELEASE OPERATION.

ALL STRANDS ARE 1/2"ø LOW RELAXATION STRANDS (AASHTO M203 GRADE 270).

EXTENDED STRANDS AND BARS ARE PARALLEL TO GIRDER.

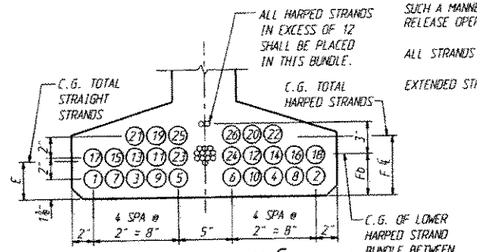

STRAND PATTERN AT ℄ SPAN

STRAND LOCATION SEQUENCE SHALL BE AS SHOWN ①, ② ETC.

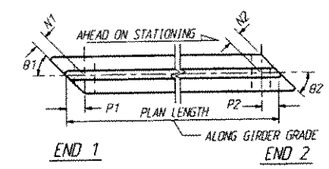

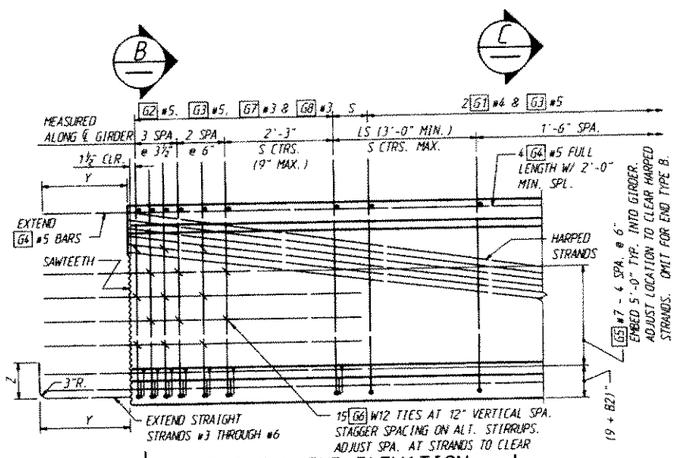

TYPICAL END ELEVATION

END TYPE C SHOWN. OTHER ENDS SIMILAR

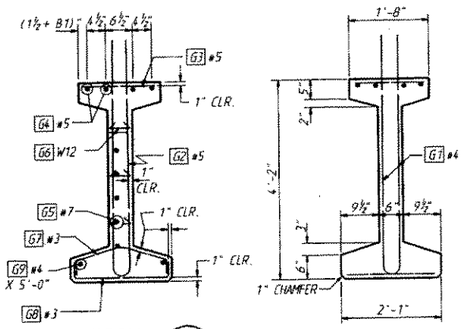

SECTION B

SECTION C

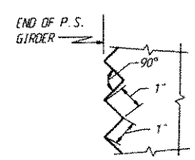

SAWTOOTH DETAILS

SAWTEETH ARE FULL WIDTH - USE SAWTOOTH KEYS FROM BOTTOM OF BOTTOM FLANGE TO BOTTOM OF LOWEST HARPED STRAND AS WELL AS TOP FLANGE ADJACENT TO HARPED STRANDS AS SHOWN IN SECTION B.

END TYPE	BEARING RECESS	Y	Z	SAWTEETH
A	YES	9"	1'-6"	YES
B	YES	0"	0"	NO
C	NO	1'-10"	9"	YES

ENDS AHEAD ON STATION
G5 BARS LEFT OF ℄
B1 = 0"
B2 = 0"
ENDS BACK ON STATION
G5 BARS RIGHT OF ℄
B1 = 1 1/2"
B2 = 3"

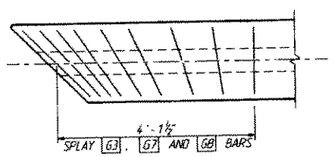

TRANSVERSE REINFORCING SKEWED ENDS

ONLY TRANSVERSE REINF. SHOWN

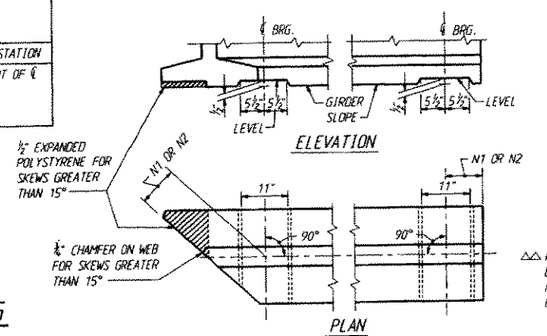

BEARING RECESS DETAIL

GIRDER SCHEDULE

DIMENSION A AT ℄ BEARINGS = 8 3/4" — BASED ON GIRDER DEFLECTION = 0 AT TIME OF SLAB POUR (120 DAYS)

SPAN	GIRDER	END 1 TYPE	END 2 TYPE	L	B1	B2	N1	N2	P1	P2	PLAN LENGTH	MIN. CONC. COMPR. STRENGTH @ 28 DAYS F'c (KSI)	MIN. CONC. COMPR. STRENGTH @ RELEASE F'ci (KSI)	S (IN.)	LS (FT.)	HARPED NO. OF STRANDS	HARPED JACKING FORCE (KIPS)	STRAIGHT NO. OF STRANDS	STRAIGHT JACKING FORCE (KIPS)	LOCATION OF C.G. STRANDS (IN.) E	F ℄	Fb	Fa	C (IN.)	D (IN.)	Ld (IN.)
1W	ALL	B	C	3'	96.7°	96.7°	9 1/2	0	9 5/8	0	44'-9 3/4"	7	6	18	3	3	93	6	186	1 1/8	3	3	21 5/8	1/8"	1/4"	9 5/8"
2W	ALL	C	C	3'	97.7°	97.7°	0	0	0	0	65'-6 3/4"	7	6	18	3	5	155	14	434	2 1/2	3	3	8 1/2	1/8"	1 1/4"	-
3W	ALL	C	B	3'	98.3°	98.3°	0	9 1/2	0	9 5/8	47'-4 1/8"	7	6	18	3	4	124	6	186	1 1/8	3	3	20	1/8"	1/8"	9 5/8"
1E	ALL	B	C	3'	96.3°	96.3°	9 1/2	0	9 5/8	0	44'-7 3/8"	7	6	18	3	3	93	6	186	1 1/8	3	3	21 5/8	1/8"	1/4"	9 5/8"
2E	ALL	C	C	3'	97.0°	97.0°	0	0	0	0	65'-5 3/4"	7	6	18	3	5	155	14	434	2 1/2	3	3	8 1/2	1/8"	1 1/4"	-
3E	ALL	C	B	3'	97.8°	97.8°	0	9 1/2	0	9 5/8	47'-1 3/4"	7	6	18	3	4	124	6	186	1 1/8	3	3	20	1/8"	1/8"	9 5/8"

MARK	LOCATION	SIZE	
G1	GIRDER STIRRUPS	4	
G2	GIRDER END STIRRUPS	5	
G3	GIRDER TOP FLANGE	5	STR.
G4	GIRDER LONGIT. FULL LENGTH	5	STR.
G5	GIRDER END LONGIT.	7	STR.
G6	GIRDER END TIES	W12	△△
G7	GIRDER END TIES	3	
G8	GIRDER END TIES	3	
G9	GIRDER LONGIT.	4	

NOTE: FOR DIMENSION A, SEE "GIRDER SCHEDULE"

BENDING DIAGRAM (ALL DIMENSIONS ARE OUT TO OUT)

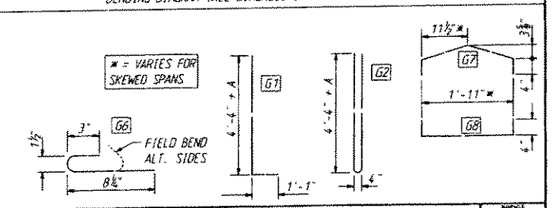

Bridge Design Engr.				REGION NO.	STATE	FED. AID PROJ. NO.	SHEET NO. / TOTAL SHEETS
Supervisor	9-92			10	WASH.	I-IM-405-3(791)	
Designed By H. ZHANG 8/92				JOB NUMBER 92W070			
Checked By T.M. MOORE 8/92							
Detailed By V. SCHICCHI 8/92							
Bridge Projects Engr.							
Prelim. Plan By							
Architect/Specialist	DATE	REVISION	BY	APP'D	4161		

BRIDGE AND STRUCTURES

9-9-92

1405_55ROOT:\FGB\W50G.FGB: 1 — 25-AUG-92

Washington State Department of Transportation

SR 405
NORTHUP TO BOTHEL
HOV AND SC&DI-STAGE 1
NE 116TH STREET 405/55

W50G GIRDER DETAILS

BRIDGE SHEET NO. 15

SHEET 351 OF 474 SHEETS

SR 405/408

207/221

SR 405 JOB NO. 7042 SHEET 15

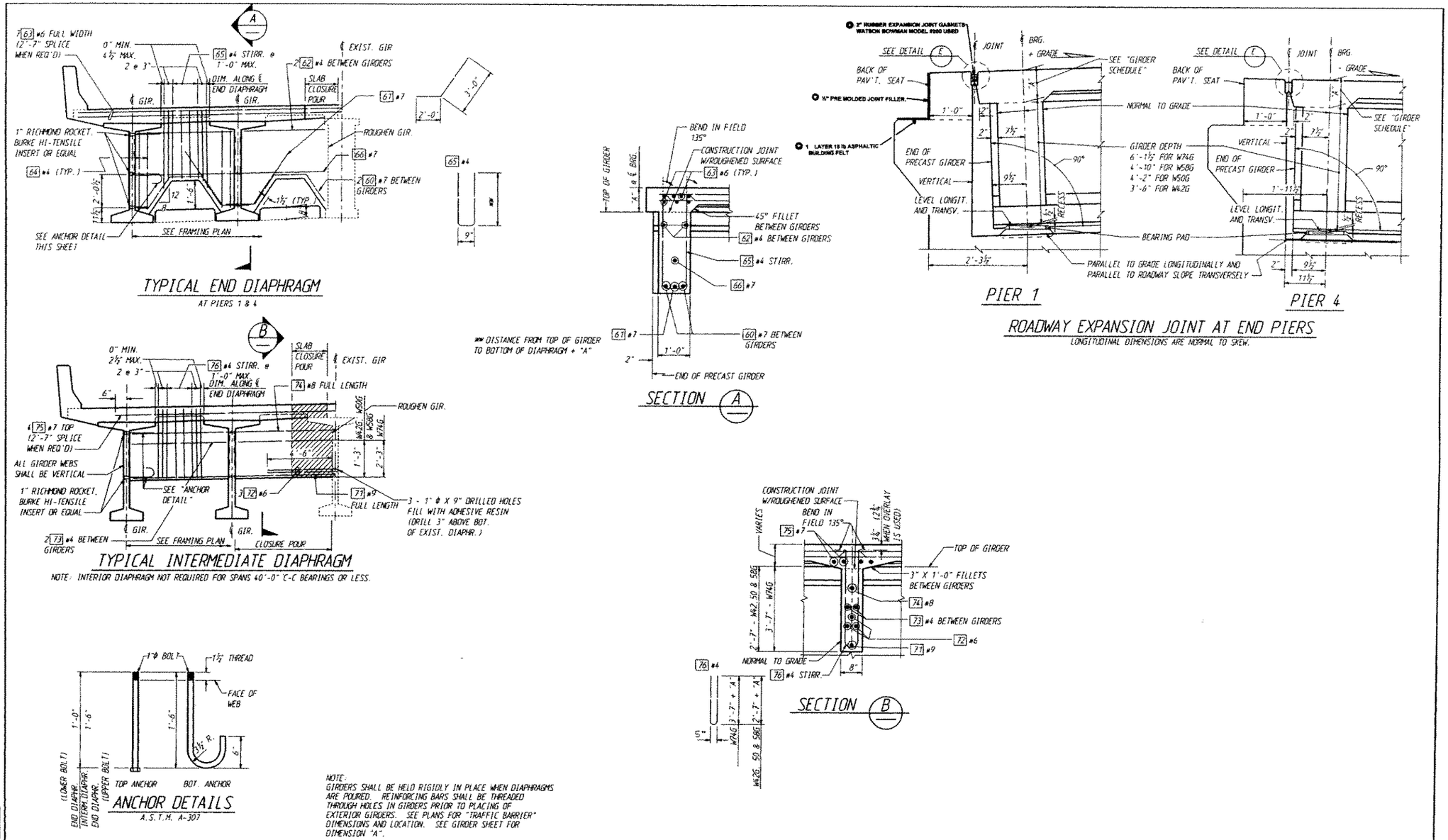

NOTE:
GIRDERS SHALL BE HELD RIGIDLY IN PLACE WHEN DIAPHRAGMS ARE POURED. REINFORCING BARS SHALL BE THREADED THROUGH HOLES IN GIRDERS PRIOR TO PLACING OF EXTERIOR GIRDERS. SEE PLANS FOR "TRAFFIC BARRIER" DIMENSIONS AND LOCATION. SEE GIRDER SHEET FOR DIMENSION "A".

AS BUILT CHANGES (3-25-98)

Bridge Design Engr.				REGION NO.	STATE	FED. AID PROJ. NO.	SHEET NO.	TOTAL SHEETS	BRIDGE AND STRUCTURES
Supervisor				10	WASH.				
Designed By H. ZHANG 8/92				JOB NUMBER 92W070		1-IM-405-3(79)			
Checked By T.M. MOORE 8/92									
Detailed By V. SCHICCHI 8/92									
Bridge Projects Engr.									
Prelim. Plan By									
Architect/Specialist	DATE	REVISION	BY	APP'D	4161				

M. HYINT LWIN, STATE OF WASHINGTON, REGISTERED PROFESSIONAL ENGINEER, 9-9-92, EXPIRES 1/17/93

1405_55ROOT:(FGB)DIAPHRAGM.FGB; 1 31-AUG-92

Washington State Department of Transportation

SR 405
NORTHUP TO BOTHEL
HOV AND SC&DI-STAGE 1
NE 116TH STREET 405/55

DIAPHRAGM DETAILS

BRIDGE SHEET NO. 16
SHEET 352 OF 474 SHEETS

SR 405 JOB NO. 7042 SHEET 16

SR405/408

207/220

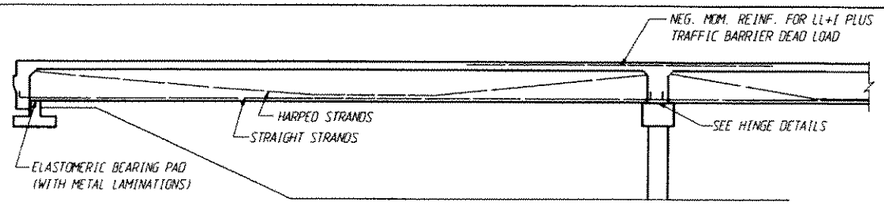

ELEVATION

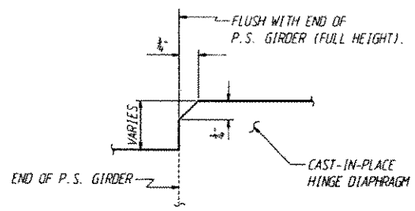

SKEW ANGLE	NO. OF SPA. "N" @ EACH GIRDER ENDS
	SEE NOTE "A"
<5°	1
5°-20°	2
20°-40°	3
40°-50°	4

CHAMFER DETAIL

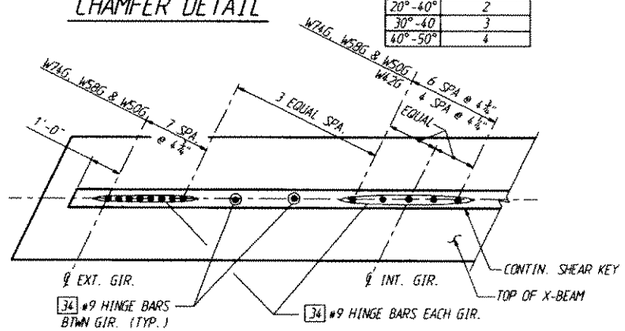

HINGE BAR PLAN

HINGE BAR TABLE

HINGE BAR SIZE 34	GIRDER SERIES	"J" DIM.
#10	W74G	3'-10"
#9	W58G	3'-2"
#9	W50G	2'-10"
#9	W42G	2'-6"

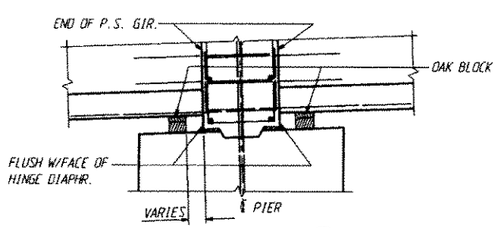

SECTION A

DETAILS NOT SHOWN ARE SIMILAR TO TYPICAL HINGE SECTION

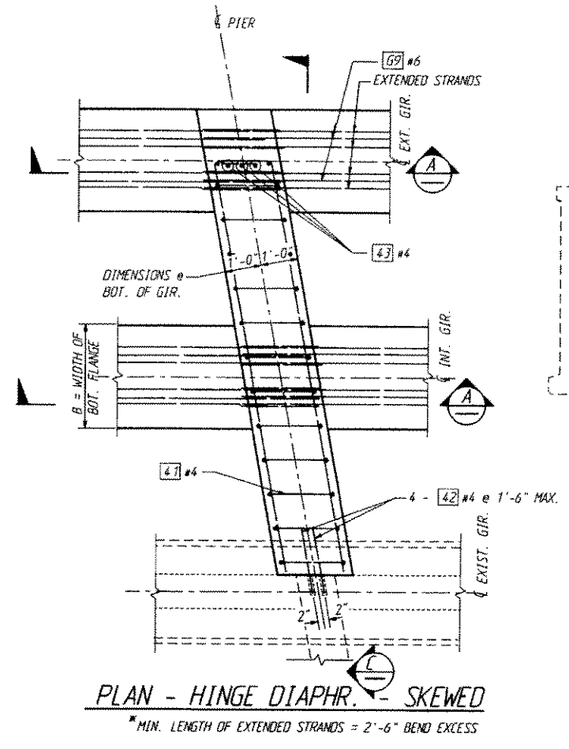

PLAN - HINGE DIAPHR. - SKEWED

*MIN. LENGTH OF EXTENDED STRANDS = 2'-6" BEND EXCESS

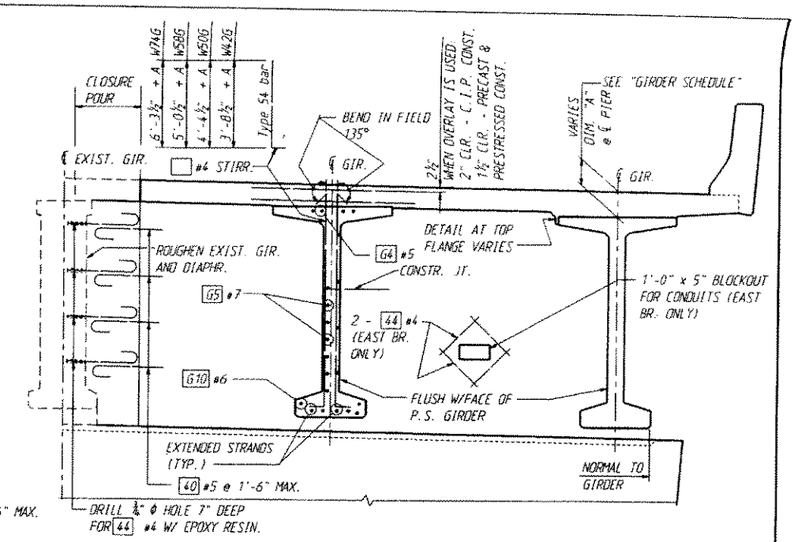

SECTION C

NOTE: W74G SHOWN, OTHER GIRDER SIMILAR

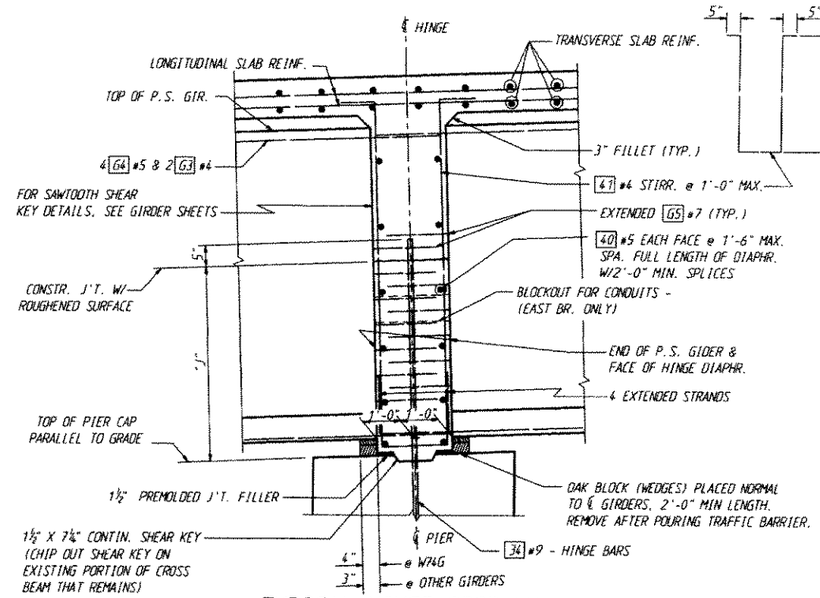

TYPICAL HINGE SECTION

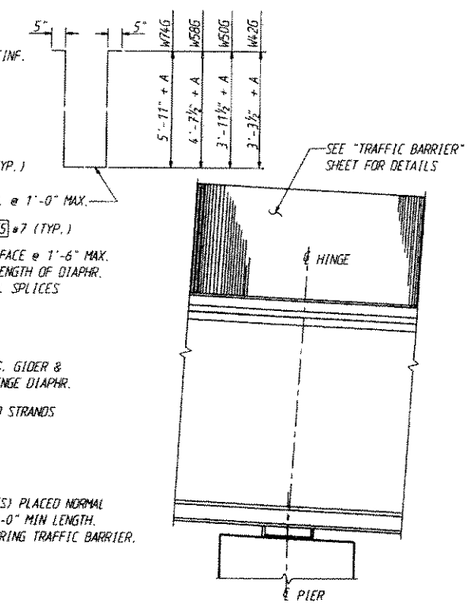

TYPICAL END VIEW HINGE DIAPHR.

Bridge Design Engr.				REGION NO.	STATE	FED. AID PROJ. NO.	SHEET NO.	TOTAL SHEETS
Supervisor				10	WASH.	I-IM-405-3(791)		
Designed By H. ZHANG 8/92				JOB NUMBER				
Checked By T.M. MOORE 8/92				92W070				
Detailed By V. SCHIECHI 8/92								
Bridge Projects Engr.								
Prelim. Plan By								
Architect/Specialist	DATE	REVISION	BY	APP'D	4161			

BRIDGE AND STRUCTURES

M. MYINT LWIN, STATE OF WASHINGTON, 16256, REGISTERED PROFESSIONAL ENGINEER, EXPIRES 1/19/93

9-9-92

1405_SSROOT:[FGB]DIAPHRAGM_2.FGB;1 31-AUG-92

Washington State Department of Transportation

SR 405
NORTHUP TO BOTHEL
HOV AND SC&DI-STAGE 1
NE 116TH STREET 405/55

INTERMEDIATE HINGE DIAPHRAGM

BRIDGE SHEET NO. 17

SHEET 353 OF 474 SHEETS

SR 405 JOB NO. 7042 SHEET 17

SR405/408

207/219

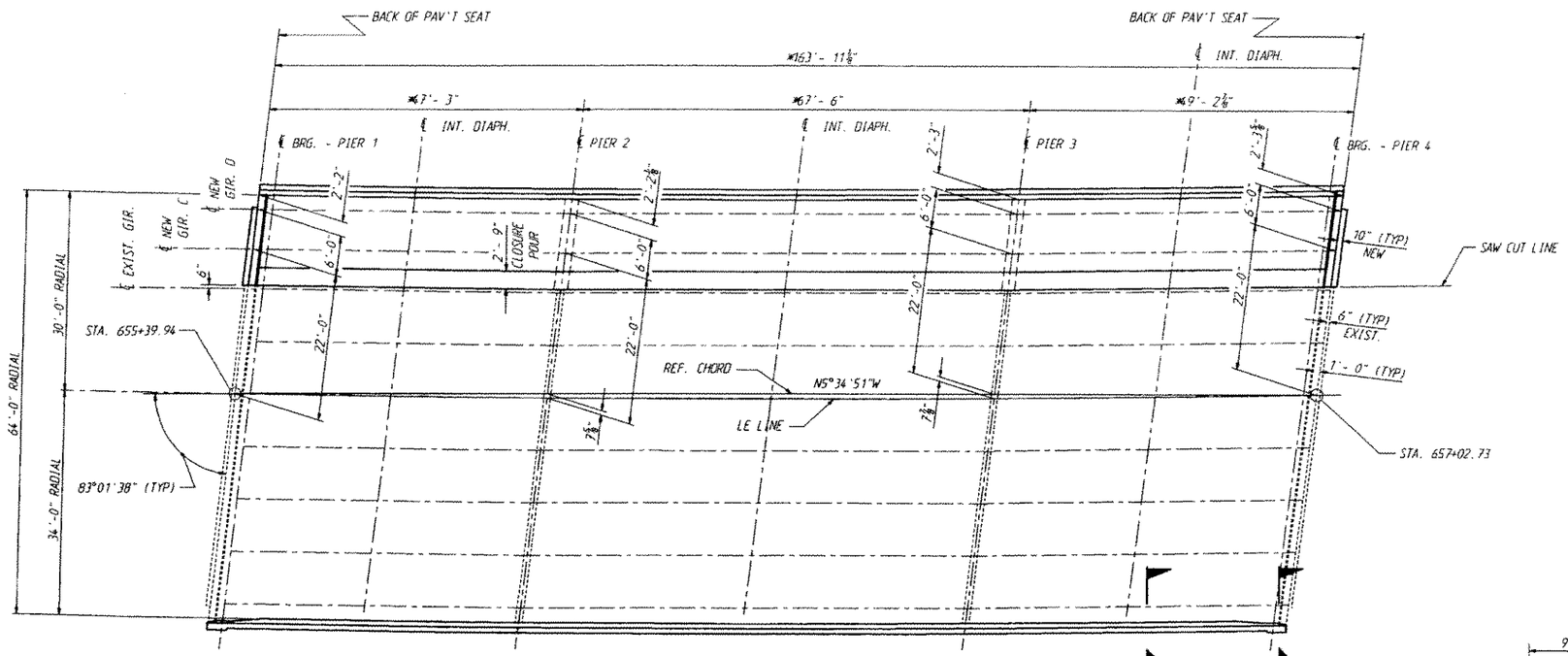

FRAMING PLAN

* - DIMENSIONS MEASURED ALONG REF. CHORD

℄ GIRDER BEARINGS		
SPAN	GIRDER	BEARING
1	C & D	N 4°48'25" W
2	C & D	N 5°33'57" W
3	C & D	N 6°20'20" W

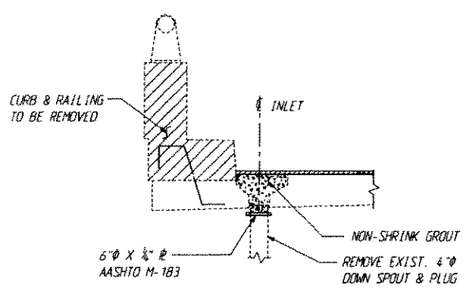

EXISTING DRAIN - PLUG DETAIL

NOTE: REMOVE DRAIN GRATE AND CHAIN. COMPLETELY REMOVE ALL RUST AND SCALE FROM THE SURFACE OF THE DRAIN BASIN. AFTER FITTING AND INSTALLING 6"Φ ℞, FILL DRAIN TO TOP OF EXIST. SLAB W/ NON-SHRINK GROUT.

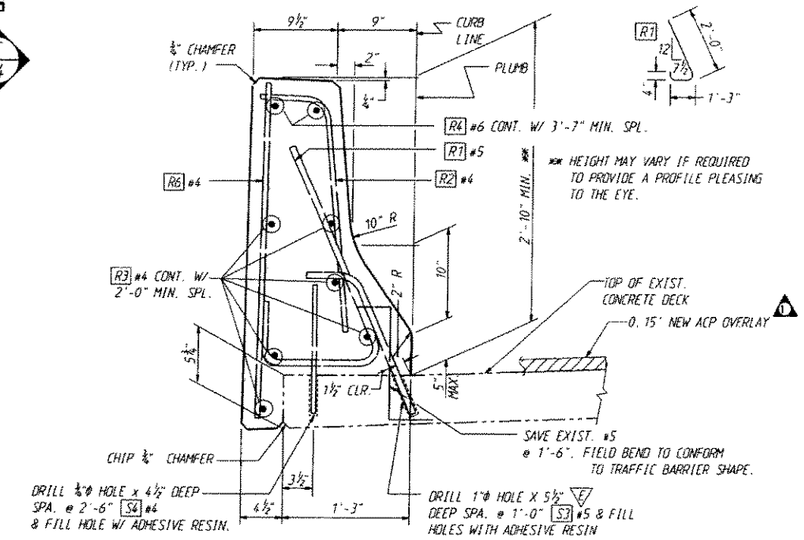

SECTION A/18

SEE TRAFFIC BARRIER SHEET FOR DETAILS NOT SHOWN.

SR 405 JOB NO. 7042 SHEET 19

Bridge Design Engr. M. M. LWIN					REGION NO.	STATE	FED. AID PROJ. NO.	SHEET NO.	TOTAL SHEETS	BRIDGE AND STRUCTURES OFFICE
Supervisor YFChan 1-93					10	WASH.				
Designed By H. ZHANG 8/92					JOB NUMBER					
Checked By T.M. MOORE 8/92										
Detailed By V. SCHICCHI 8/92										
Bridge Projects Engr.										
Prelim. Plan By	1/93	1 EDITORIAL CHANGES	JW		4161					
Architect/Specialist	DATE	REVISION	BY	APP'D						

SUPERVISING BRIDGE ENGINEER — BRIDGE DESIGN ENGINEER — 9-9-92 — M. MYINT LWIN, STATE OF WASHINGTON, REGISTERED PROFESSIONAL ENGINEER, EXPIRES 1/17/94

I405_55ROOT:(FGB)FRAMING_PLAN_E.FGB;1 25-JAN-93

Washington State Department of Transportation

SR 405
NORTHUP TO BOTHEL
HOV AND SC&DI-STAGE 1
NE 116TH STREET 405/55

FRAMING PLAN - EAST BRIDGE

BRIDGE SHEET NO. 19 — SHEET 355 OF 474 SHEETS

SR 405/408

207/217

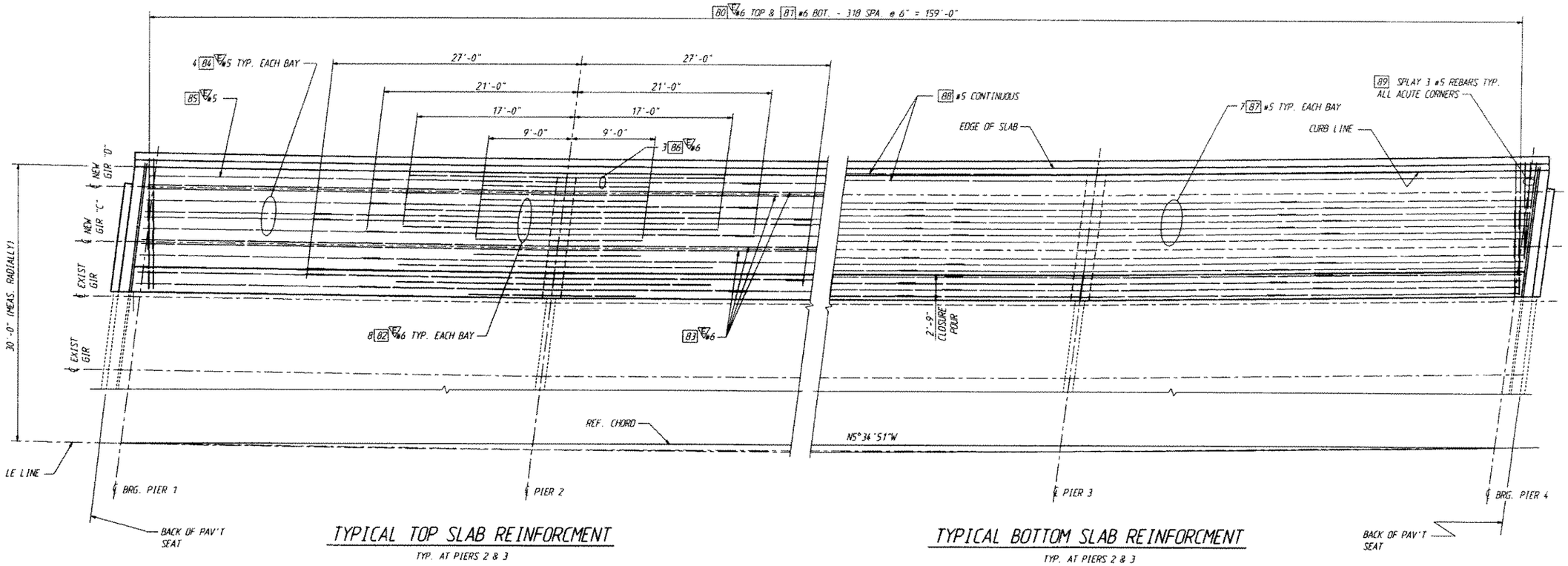

TYPICAL TOP SLAB REINFORCMENT

TYP. AT PIERS 2 & 3

TYPICAL BOTTOM SLAB REINFORCMENT

TYP. AT PIERS 2 & 3

SLAB PLAN - EAST BRIDGE

NOTES:

1. SPLICES IN LONGITUDINAL REBARS TO BE 2'-0" MIN.

SR 405 JOB NO. 7042 SHEET 22

Bridge Design Engr.					REGION NO.	STATE	FED. AID PROJ. NO.	SHEET NO.	TOTAL SHEETS
Supervisor					10	WASH.	I-IM-405-3(791)		
Designed By H. ZHANG 8/92					JOB NUMBER				
Checked By T.M. MOORE 8/92					92W070				
Detailed By V. SCHICCHI 8/92									
Bridge Projects Engr.									
Prelim. Plan By									
Architect/Specialist	DATE	REVISION	BY	APP'D	4161				

BRIDGE AND STRUCTURES

9-9-92

I405_SSROOT:[FGB]SLAB_PLAN_E.FGB;1 31-AUG-92

Washington State Department of Transportation

SR 405
NORTHUP TO BOTHEL
HOV AND SC&DI-STAGE 1
NE 116TH STREET 405/55

SLAB REINFORCMENT - EAST BRIDGE

BRIDGE SHEET NO. 22

SHEET 358 OF 474 SHEETS

SR 405/408

207/214

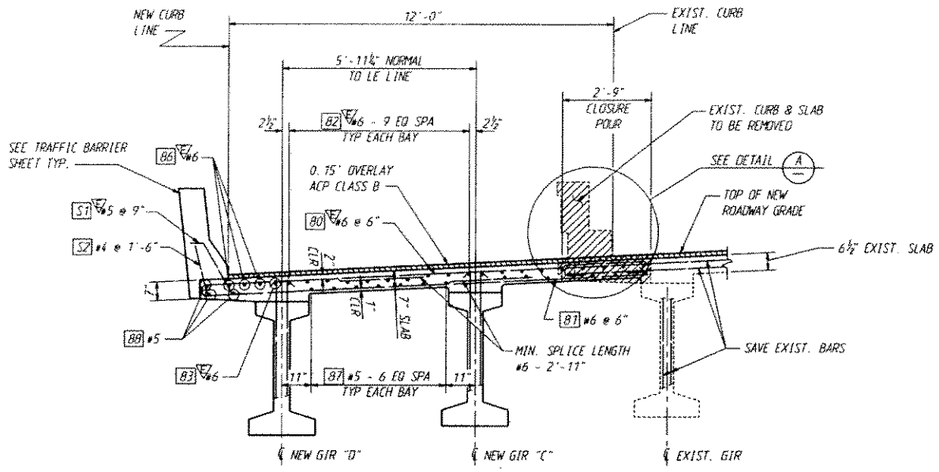

TYPICAL SECTION

SHOWN NEAR ℄ PIERS AHEAD ON STATIONING

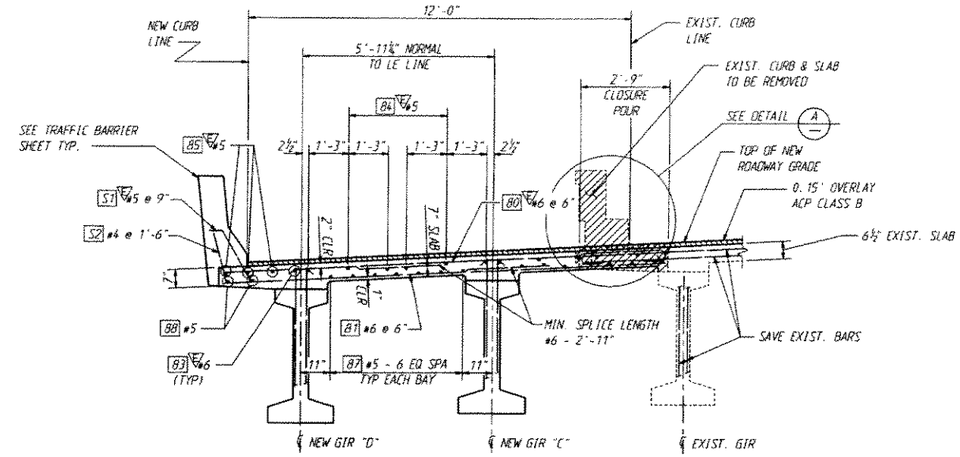

TYPICAL SECTION

SHOWN NEAR ℄ SPANS

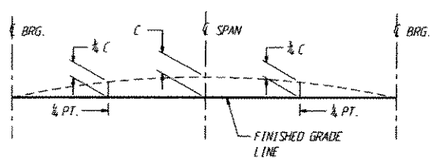

SCREED SETTING DIMENSIONS

FOR DIMENSION "C" SEE GIRDER SCHEDULE

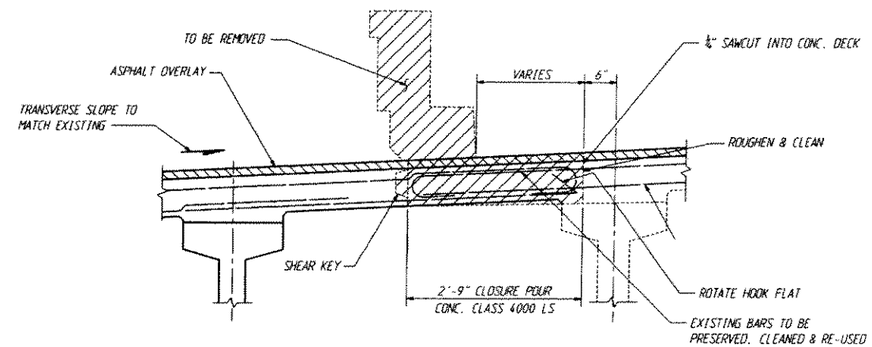

DETAIL A

Bridge Design Engr.					REGION NO.	STATE	FED. AID PROJ. NO.	SHEET NO.	TOTAL SHEETS
Supervisor					10	WASH.			
Designed By H. ZHANG 8/92					JOB NUMBER				
Checked By T.M. MOORE 8/92					92W070		I-IM-405-3(791)		
Detailed By V. SCHICCHI 8/92									
Bridge Projects Engr.									
Prelim. Plan By									
Architect/Specialist	DATE	REVISION	BY	APP'D	4161				

BRIDGE AND STRUCTURES

9-9-92

I405_SSROOT:\FGB\SLAB_PLAN_E_SECTS.FGB:1 31-AUG-92

Washington State Department of Transportation

SR 405
NORTHUP TO BOTHEL
HOV AND SCADI-STAGE 1
NE 116TH STREET 405/55

SLAB REINFORCMENT - EAST BRIDGE

BRIDGE SHEET NO. 23

SHEET 359 OF 474 SHEETS

SR 405 JOB NO. 7042 SHEET 23

SR405/408

207/213

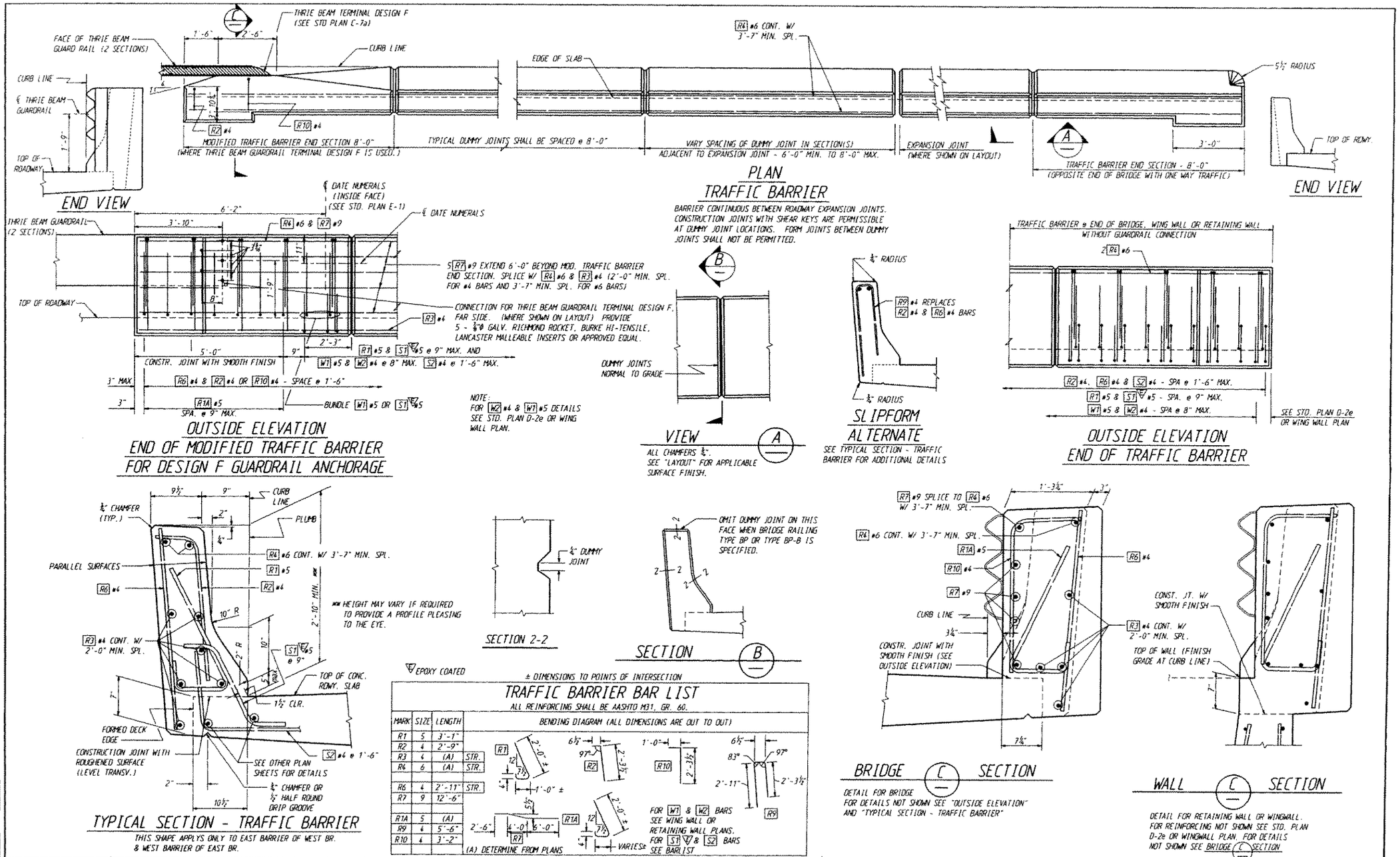

MARK	SIZE	LENGTH	
R1	5	3'-1"	
R2	4	2'-9"	
R3	4	(A)	STR.
R4	6	(A)	STR.
R6	4	2'-11"	STR.
R7	9	12'-6"	
R1A	5	(A)	
R9	4	5'-6"	
R10	4	3'-2"	

Bridge Design Engr.				
Supervisor				
Designed By H. ZHANG 8/92				
Checked By T.M. MOORE 8/92				
Detailed By V. SCHICCHI 8/92				
Bridge Projects Engr.				
Prelim. Plan By				
Architect/Specialist	DATE	REVISION	BY	APP'D

REGION NO.	STATE	FED. AID PROJ. NO.	SHEET NO.	TOTAL SHEETS
10	WASH	I-IM-405-3(791)		
JOB NUMBER 92W070				
4161				

BRIDGE AND STRUCTURES

R. WYNT LWIN STATE OF WASHINGTON 19968 REGISTERED PROFESSIONAL ENGINEER 9-9-92 EXPIRES 1/17/93

[405_SSROOT (FGB) TB. FGB: 1 31-AUG-92

Washington State Department of Transportation

SR 405
NORTHUP TO BOTHEL
HOV AND SC&DI-STAGE 1
NE 116TH STREET 405/55

TRAFFIC BARRIER

BRIDGE SHEET NO. 24
SHEET 360 OF 474 SHEETS

SR 405 JOB NO. 7042 SHEET 24

SR 405/408

201/212

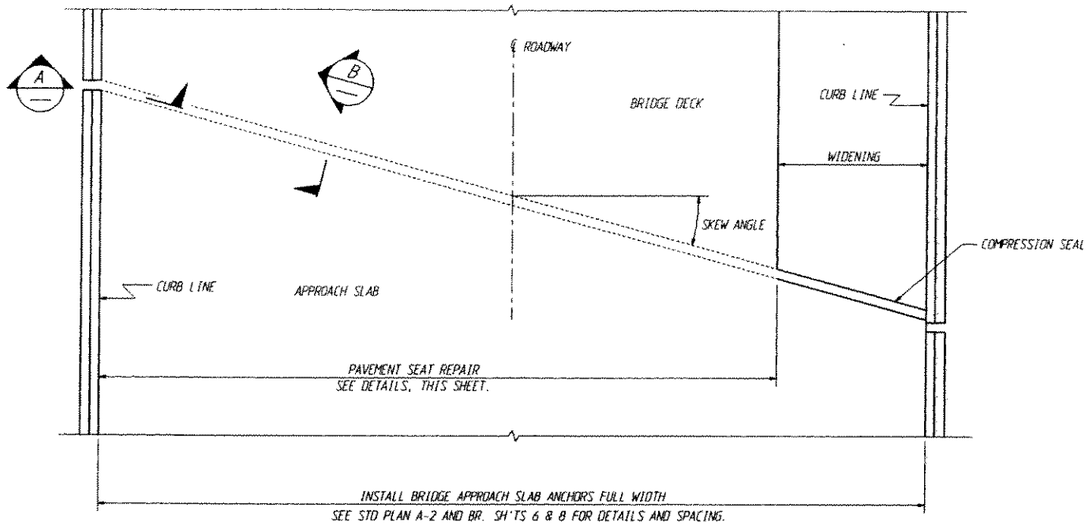

PLAN AT EXPANSION JOINT

WEST BRIDGE SHOWN - EAST BRIDGE SIMILAR
(TYP. @ ABUTMENTS)

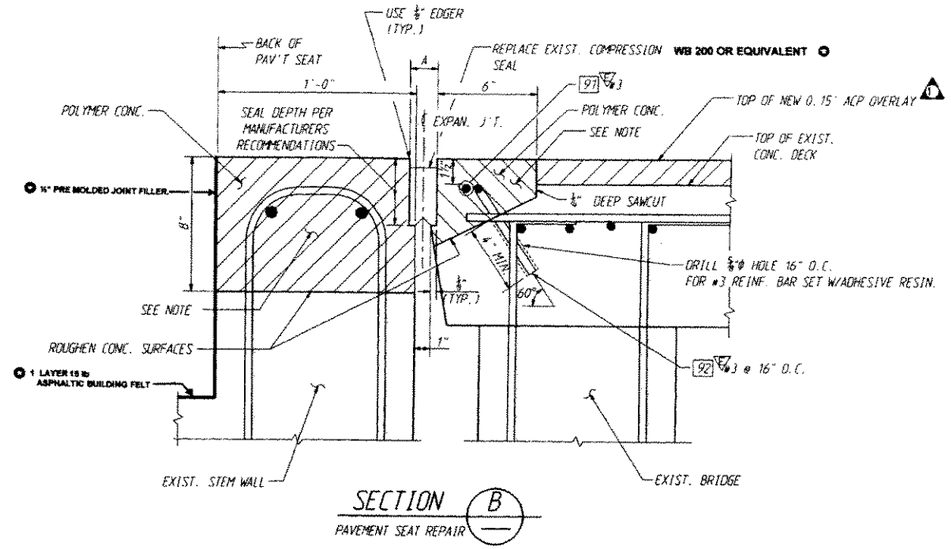

SECTION B

PAVEMENT SEAT REPAIR

NOTE:

CHIP AWAY EXISTING CONRETE AS SHOWN FOR FULL WIDTH - CURB TO CURB OF EXISTING BRIDGES. SAVE ANY EXISTING REINFORCING BARS EXTENDING INTO THE CHIPPED OUT AREAS. DRILL IN AND SET NEW REINFORCING BARS AS SHOWN. PLACE BRIDGE APPROACH SLAB ANCHORS PER STD PLAN A-2. RECONSTRUCT WITH POLYMER CONCRETE.

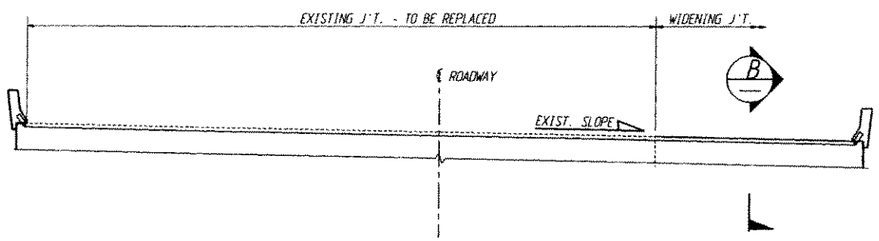

TYPICAL ROADWAY SECTION AT EXPANSION JOINT

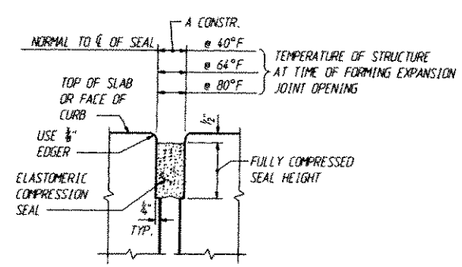

SECTION B

CONCRETE OPENING
WIDENING JOINT

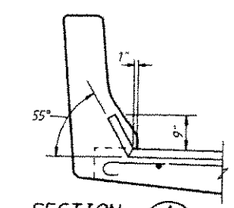

SECTION A

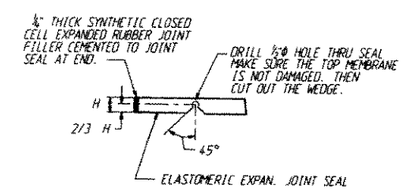

SEAL CUTTING DETAIL

OVERLAY REQUIREMENTS

1½" EXISTING ACP TO BE REMOVED.
1½" ACP OVERLAY REQUIRED ON
BRIDGE 405/55 E & W.

EXPANSION JOINT TABLE

LOCATION	OPENING "A" (NORMAL TO JOINT) @ 40 F	@ 64 F	@ 80 F	EXPANSION JOINT Type
BRIDGE 405/55 E & W PIERS 1 & 4	1⅛"	1¼"	1⅜"	COMPRESSION SEAL D.S. BROWN CV-2000 WATSON BOWMAN ACME WA-200 ELASTOMER SEALS X-2000 STRUCTURAL ACCESSORIES SA 2000

AS BUILT CHANGES (3-25-96)

Bridge Design Engr.					REGION NO.	STATE	FED. AID PROJ. NO.	SHEET NO.	TOTAL SHEETS	BRIDGE AND STRUCTURES
Supervisor					10	WASH.				
Designed By H. ZHANG 8/92					JOB NUMBER					
Checked By T.M. MOORE 8/92										
Detailed By V. SCHICCHI 8/92										
Bridge Projects Engr.										
Prelim. Plan By	1/93	1 EDITORIAL CHANGES	JN		4161					
Architect/Specialist	DATE	REVISION	BY	APP'D						

9-9-92 EXPIRES 1/1/93

1405_SSROOT:\FGB\EXPANSION.FGB; 1 25-JAN-93

Washington State Department of Transportation

SR 405
NORTHUP TO BOTHEL
HOV AND SCADI-STAGE 1
NE 116TH STREET 405/55

EXPANSION JOINTS

BRIDGE SHEET NO. 25
SHEET 361 OF 474 SHEETS

SR 405/408

207/211

SR 405 JOB NO. 7042 SHEET 25

S = Bar is included in substructure quantities.
F = Bar to be field welded.
T = Tie or Stirrup.
E = Bar is to be epoxy coated.
V = Bar dimensions vary between dimensions shown on this line and the following line.

MARK NO.	LOCATION	SIZE	NO REQ'D	BEND TYPE	TIE OR STIR	F.L.D. WELD	SUBSTR	EPOXY COAT	VARIES	NO. EACH	U Ft.	U In.	W Ft.	W In.	X Ft.	X In.	Y Ft.	Y In.	Z Ft.	Z In.	θ1 Deg	θ2 Deg	LENGTH Ft.	LENGTH In.	WEIGHT Lbs.
	PIER 1 ABUTMENT - EAST																								
1	LONG FOOTING BOTTOM	6	12	50							6	9.0											6	9.	122
2	TRANS FOOTING BOTTOM	6	8	50							11	6.0											11	6.	138
3	LONG FOOTING TOP	6	12	50							6	9.0											6	9.	122
4	TRANS FOOTING TOP	6	8	50							11	6.0											11	6.	138
5	VERT/LONG GIRDER SEAT/FTG	4	9	54							5	3.0											5	10.	35
6	LONG TOP GIRDER SEAT	4	9	56	T						2	10.0											3	5.	21
7	VERT/LONG GIRDER SEAT/FTG	4	9	54							5	3.0											5	10.	35
8	TRANS GIRDER SEAT	4	5	50							9	6.0											9	6.	32
9	TRANS GIRDER SEAT TOP	6	3	50							9	6.0											9	6.	43
10	LONG TOP GIRDER STOP	5	10	61	T						2	1.0	2	2.0	2	2.0		6.0		6.0			7	0.	73
11A	TRANS TOP GIRDER STOP	4	6	50							3	9.0											3	9.	15
11B	TRANS GIRDER STOP/WING WALL	4	3	57							1	6.0											2	6.	5
12	VERT ABUTMENT WALL	5	18	54			E				5	3.0											6	0.	113
13	TRANS ABUTMENT WALL	4	10	57							9	9.0											10	9.	72
14	LONG ABUTMENT/CORBEL PAVT	4	10	56	T						1	6.0											2	1.	14
15	TRANS CORBEL PAVT	4	1	50							11	6.0											11	6.	8
16	TRANS TOP ABUTMENT WALL	4	2	57				F			9	9.0											10	9.	14
17	LONG TOP ABUTMENT WALL	5	13	56	T		E				1	9.0											1	6.	20
18	SPLICE/DOWEL INTO EXIST WALL	4	9	50							3	0.0											3	0.	18
19	SPLICE/DOWEL INTO EXIST FTG	6	14	50							3	9.0											3	9.	79
	PIER 4 ABUTMENT - EAST																								
1	LONG FOOTING BOTTOM	6	12	50							6	9.0											6	9.	122
2	TRANS FOOTING BOTTOM	6	8	50							11	8.0											11	8.	140
3A	LONG FOOTING TOP	5	12	50							6	9.0											6	9.	84
4A	TRANS FOOTING TOP	5	8	50							11	8.0											11	8.	97
5	VERT/LONG GIRDER SEAT/FTG	4	9	54							4	3.0											4	10.	29
6	LONG TOP GIRDER SEAT	4	9	56	T						2	1.0											2	8.	16
7	VERT/LONG GIRDER SEAT/FTG	4	9	54							4	3.0											4	10.	29
8	TRANS GIRDER SEAT	4	5	50							9	6.0											9	6.	32
9	TRANS GIRDER SEAT TOP	6	3	50							9	6.0											9	6.	43
10	LONG TOP GIRDER STOP	5	10	61	T						2	1.0	2	2.0	2	2.0		6.0		6.0			7	0.	73
11A	TRANS TOP GIRDER STOP	4	6	50							3	9.0											3	9.	15
11B	TRANS GIRDER STOP/WING WALL	4	3	57							1	6.0											2	6.	5
12	VERT ABUTMENT WALL	5	18	54			E				5	3.0											6	0.	113
13	TRANS ABUTMENT WALL	4	10	57							9	9.0											10	9.	72
14	LONG ABUTMENT/CORBEL PAVT	4	10	56	T						1	6.0											2	1.	14
15	TRANS CORBEL PAVT	4	1	50							11	6.0											11	6.	8
16	TRANS TOP ABUTMENT WALL	4	2	57				F			9	9.0											10	9.	14
17	LONG TOP ABUTMENT WALL	5	13	56	T		E				1	9.0											1	6.	20
18	SPLICE/DOWEL INTO EXIST WALL	4	9	50							3	0.0											3	0.	18
19	SPLICE/DOWEL INTO EXIST FTG	4	3	57							4	9.0											4	9.	10
20	ARROUND CONDUIT SLOT	4	8	50							2	5.0											2	5.	13
	PIER 2 - EAST																								
21	LONG FOOTING BOTTOM	7	19	50							13	9.0											13	9.	534
22	LONG FOOTING TOP	6	15	50							13	9.0											13	9.	310
23	TRANS FOOTING BOTTOM	7	19	50							13	9.0											13	9.	534
24	TRANS FOOTING TOP	6	15	50							13	9.0											13	9.	310
25	COLUMN SPIRAL TIE	5	1	67							2	9.0		3.0							78		$	$	690
26	COLUMN AXIAL	11	11	56							19	7.0											22	11.	1339
	PIER 3 - EAST																								
21	LONG FOOTING BOTTOM	7	19	50							13	9.0											13	9.	534
22	LONG FOOTING TOP	6	15	50							13	9.0											13	9.	310
23	TRANS FOOTING BOTTOM	7	19	50							13	9.0											13	9.	534
24	TRANS FOOTING TOP	6	19	50							13	9.0											13	9.	392
25	COLUMN SPIRAL TIE	5	1	67							2	9.0		3.0							79		$	$	699
26	COLUMN AXIAL	11	11	56							19	10.0											23	2.	1354
	PIER 2&3 - EAST																								
27	AXIAL CROSS BEAM BOTTOM	9	12	50							15	0.5											15	1.	615
28	AXIAL CROSS BEAM MIDDLE	6	8	50							12	10.5											12	11.	155
29	AXIAL CROSS BEAM TOP	10	12	50							16	4.5											16	5.	848
30	AXIAL CROSS BEAM TOP HOOK	10	8	56							9	9.0											12	10.	884
31	CROSS BEAM STIR BOTTOM	5	32	61							3	1.0	2	10.0			1	3.0	1	3.0			8	1.	270
32	CROSS BEAM TIE VERT	5	64	56							2	10.0											4	3.	284
33	CROSS BEAM TIE TOP	5	32	56							3	3.0											4	8.	156
34	HINGE BAR	9	30	64							5	10.0											7	2.	731
	PIER 2&3 - EAST																								
40	TRANS HINGE DIAPH.	5	20	51							11	6.0											12	1.	252
41	VERT HINGE DIAPH. STIR	4	24	63							1	9.0	4	8.3			1	0.0	1	0.0			8	1.	130
42	DRILL INTO EXIST	4	16	51							1	9.0											2	3.	24
43	VERT HINGE DIAPHRAGM	4	6	50							4	11.0											4	11.	20
44	ARROUND SLOT	4	16	50							2	6.0											2	6.	27
50	HORIZON WING WALL N.F.	6	8	50							9	9.0											9	9.	117
50	HORIZON WING WALL N.F.	6	8	50					V		8	5.0											8	5.	
											3	2.0											3	2.	90
51	HORIZON WING WALL F.F.	4	8	50							9	9.0											9	9.	52
51	HORIZON WING WALL F.F.	4	8	50					V		8	5.0											8	5.	
											3	2.0											3	2.	31
52	PARALLEL EDGE WING WALL	4	4	50							7	6.0											7	6.	20
53	VERT WING WALL	4	16	50							6	7.5											6	9.	71
54	VERT WING WALL	4	20	50					V		6	0.0											6	0.	
											3	4.0											3	4.	62
55	SLOT REINFORCE WING WALL	4	16	50							2	6.0											2	6.	23
60	END DIAPHRAGM BETWEEN GIRDER	7	8	90							5	8.											5	8.	93
61	END DIAPHRAGM SPLICE AT GIRD	7	8	91							5	9.											5	9.	82
62	END DIAPHRAGM MIDDLE	4	4	50							10	9.0											10	9.	29
63	END DIAPHRAGM TOP	6	4	50							10	9.0											10	9.	65
64	END DIAPHRAGM BETWEEN FLANGE	4	16	50							2	7.0											2	7.	28

S = Bar is included in substructure quantities.
F = Bar to be field welded.
T = Tie or Stirrup.
E = Bar is to be epoxy coated.
V = Bar dimensions vary between dimensions shown on this line and the following line.

MARK NO.	LOCATION	SIZE	NO REQ'D	BEND TYPE	TIE OR STIR	F.L.D. WELD	SUBSTR	EPOXY COAT	VARIES	NO. EACH	U Ft.	U In.	W Ft.	W In.	X Ft.	X In.	Y Ft.	Y In.	Z Ft.	Z In.	θ1 Deg	θ2 Deg	LENGTH Ft.	LENGTH In.	WEIGHT Lbs.
65	END DIAPHRAGM STIR	4	28	71								9.0	3	10.0	3	10.0							8	0.	150
66	END DIAPHRAGM LOWER MIDDLE	7	2	50							10	9.0											10	9.	44
	INTER DIAPHRAGM - EAST																								
71	BOTTOM	9	3	50							11	6.0											11	6.	117
72	DRILL HOLE	6	9	50							5	3.0											5	3.	71
73	BETWEEN GIRDERS	4	6	50							6	0.0											6	0.	24
74	MIDDLE	8	3	50							11	6.0											11	6.	92
75	TOP	7	12	50							12	0.0											12	0.	294
76	STIR	4	42	71								5.0	3	4.0	3	4.0							6	10.	192
	ROADWAY SLAB - EAST																								
80	TRANS TOP	6	320	51				E			14	3.0											14	11.	7170
81	TRANS BOTTOM	6	320	50				E			14	3.0											14	3.	6849
82	LONG TOP	6	16	50				E	V	4	23	6.0											23	6.	
											39	6.0											39	6.	757
82	LONG TOP	6	16	50				E	V	4	47	6.0											47	6.	
											53	6.0											53	6.	1296
83	TOP GIRDER HANGER	6	4	50				E			54	11.0											54	11.	330
84	LONG TOP	5	18	50				E	V	3	28	8.0											28	8.	
											22	8.0											22	8.	482
84	LONG TOP	5	18	50				E	V	3	18	2.0											18	2.	
											30	2.0											30	2.	454
84	LONG TOP	5	18	50				E	V	3	30	8.0											30	8.	
											24	8.0											24	8.	519
85	LONG TOP OVERHANG	5	6	50				E	V	1	28	8.0											28	8.	
											22	8.0											22	8.	161
85	LONG TOP OVERHANG	5	6	50				E	V	1	18	2.0											18	2.	
85	LONG TOP OVERHANG	5	6	50				E	V	1	30	2.0											30	2.	151
											30	8.0											30	8.	
86	LONG TOP OVERHANG	6	8	50				E	V	4	24	8.0											24	8.	173
											18	0.0											18	0.	
										4	42	0.0											42	0.	360
87	LONG BOTTOM	5	30	50							$	$											$	$	1724
88	LONG BOTTOM OVERHANG	5	6	50							$	$											$	$	345
89	SPLAY ACUTE CORNER	5	6	50							8	1.0											8	1.	51
	EXPANSION JOINT - EAST																								
91	TRANS CONTINUOUS	3	6	50				E			22	4.0											22	4.	50
92	TRANS HOOKED	3	96	54				E				8.0											1	1.	39
	PIER 1 ABUTMENT - WEST																								
1	LONG FOOTING BOTTOM	6	12	50							6	9.0											6	9.	122
2	TRANS FOOTING BOTTOM	6	8	50							11	6.0											11	6.	138
3	LONG FOOTING TOP	6	12	50							6	9.0											6	9.	122
4	TRANS FOOTING TOP	6	8	50							11	6.0											11	6.	138
5	VERT/LONG GIRDER SEAT/FTG	4	9	54							5	3.0											5	10.	35
6	LONG TOP GIRDER SEAT	4	9	56	T						2	10.0											3	5.	21
7	VERT/LONG GIRDER SEAT/FTG	4	9	54							5	3.0											5	10.	35
8	TRANS GIRDER SEAT	4	5	50							9	6.0											9	6.	32
9	TRANS GIRDER TOP	6	3	50							9	6.0											9	6.	43
10	LONG TOP GIRDER STOP	5	10	61	T						2	1.0											2	1.	22
11A	TRANS TOP GIRDER STOP	4	6	50							3	9.0											3	9.	15
11B	TRANS GIRDER STOP/WING WALL	4	3	57							1	6.0											2	6.	5
12	VERT ABUTMENT WALL	5	18	54				E			5	3.0											6	0.	113
13	TRANS ABUTMENT WALL	4	10	57							9	9.0											10	9.	72
14	LONG ABUTMENT/CORBEL PAVT	4	10	56	T						1	6.0											2	1.	14
15	TRANS CORBEL PAVT	4	1	50							11	6.0											11	6.	8
16	TRANS TOP ABUTMENT WALL	4	2	57				E			9	9.0											10	9.	14
17	LONG TOP ABUTMENT WALL	5	13	56	T			E				9.0											1	6.	20
18	SPLICE/DOWEL INTO EXIT WALL	4	9	50							3	0.0											3	0.	18
19	SPLICE/DOWEL INTO EXIT FTG	6	14	50							3	9.0											3	9.	79
	PIER 4 ABUTMENT - WEST																								
1	LONG FOOTING BOTTOM	6	12	50							6	9.0											6	9.	122
2	TRANS FOOTING BOTTOM	6	8	50							11	7.0											11	7.	138
3A	LONG FOOTING TOP	5	12	50							6	9.0											6	9.	84
4A	TRANS FOOTING TOP	5	8	50							11	7.0											11	7.	97
5	VERT/LONG GIRDER SEAT/FTG	4	9	54							4	3.0											4	10.	29
6	LONG TOP GIRDER SEAT	4	9	56	T						2	1.0											2	8.	16
7	VERT/LONG GIRDER SEAT/FTG	4	9	54							4	3.0											4	10.	29
8	TRANS GIRDER SEAT	4	5	50							9	6.0											9	6.	32
9	TRANS GIRDER SEAT TOP	6	3	50							9	6.0											9	6.	43
10	LONG TOP GIRDER STOP	5	10	61	T						2	1.0											2	1.	22
11A	TRANS TOP GIRDER STOP	4	6	50							3	9.0											3	9.	15
11B	TRANS GIRDER STOP/WING WALL	4	3	57							1	6.0											2	6.	5
12	VERT ABUTMENT WALL	5	18	54				E			5	3.0											6	0.	113
13	TRANS ABUTMENT WALL	4	10	57							9	9.0											10	9.	72
14	LONG ABUTMENT CORBEL/PAVT	4	10	56	T						1	6.0											2	1.	14
15	TRANS CORBEL PAVT	4	1	50							11	6.0											11	6.	8
16	TRANS TOP ABUTMENT WALL	4	2	57				E			9	9.0											10	9.	14
17	LONG TOP ABUTMENT WALL	5	13	56	T			E				9.0											1	6.	20
18	SPLICE/DOWEL INTO EXIST WALL	4	9	50							3	0.0											3	0.	18
19	SPLICE/DOWEL INTO EXIST FTG	4	3	57							3	9.0											4	9.	10
	PIER 2 - WEST																								
21	LONG FOOTING BOTTOM	7	19	50							13	9.0											13	9.	534
22	LONG FOOTING TOP	6	15	50							13	9.0											13	9.	310
23	TRANS FOOTING BOTTOM	7	19	50							13	9.0											13	9.	534
24	TRANS FOOTING TOP	6	15	50							13	9.0											13	9.	310
25	COLUMN SPIRAL TIE	5	1	67							2	9.0		3.0							89		$	$	787

STEEL REINFORCING BAR QUANTITIES NOT INCLUDED IN THIS BAR LIST

TRAFFIC BARRIER
BRIDGE GRATE INLETS
RETAINING WALL

BENDING DIAGRAMS

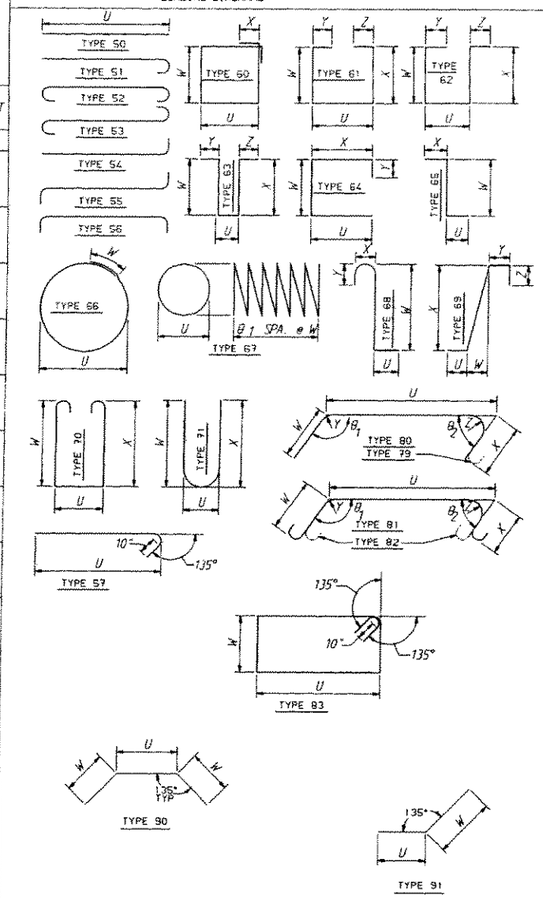

NOTE:

1. ALL REINFORCING BARS ON THIS SHEET SHALL BE AASHTO M-31 UNLESS SHOWN OTHERWISE.
2. REINFORCING FOR TRAFFIC BARRIERS NOT SHOWN IN THIS BAR LIST. SEE TRAFFIC BARRIER SHEET.
3. BEND FOR TRANSVERSE BARS DUE TO ROADWAY CROWN CONDITIONS HAVE NOT BEEN SHOWN. THESE BARS SHALL BE BENT AS REQUIRED TO CONFORM TO THE CONFIGURATION OF THE STRUCTURE.

$ NUMBER AND LENGTH OF BARS TO BE DETERMINED BY THE CONTRACTOR FROM PLANS.

Bridge Design Engr.	9-92		
Supervisor	9-92		
Designed By H. ZHANG 9/92			
Checked By T.M. MOORE 9/92			
Detailed By V. SCHICCHI 9/92			
Bridge Plan. Engr.			
Preliim. Plan By			
Architect/Specialist		DATE	REVISION

BY | APP'D

REGION NO.	STATE	FED. AID PROJ. NO.
10	WASH.	I-IM-405-3(791)
JOB NUMBER 92W070		
4161		

SHEET NO. | TOTAL SHEETS

BRIDGES AND STRUCTURES

1405_SSROOT:[FGB]BSS_BAR.FGB;1 09-SEP-92

Washington State Department of Transportation

SR 405
NORTHUP TO BOTHEL
HOV AND SC&DI-STAGE 1
NE 116TH STREET 405/55

BARLIST

BRIDGE SHEET NO. 26
SHEET 362 OF 474 SHEETS

SR 405 JOB NO. 7042 SHEET 26

SR 405/408

207/210

BRIDGE INSPECTION REPORT

BATS 4 0 2 1 **Status** Committed Ver Date 11 / 19 / 2002 Agency Washington State

Bridge No. 405/55E
Bridge Name NE 116TH ST OC
Structure ID 0008615A

Page 1 of 1
Route 00405
MilePost 19.85

Structure Type PCB
Intersecting NE 116TH ST
Location 1.7 N JCT SR 908

Inspector's Signature EJS IDent# G0107

Co-Inspector's Signature DAG

Inspection Frequency 24
Inspection Date 11/19/2002
Inspection Hours 1.00

7		Structural Adqcy	(657)	7		SuperStructure	(671)	1		Bridge Rails	(684)
7		Deck Geometry	(658)	9		Curbs	(672)	1		Transition	(685)
7		Underclearance	(659)	9		Sidewalks	(673)	1		Guardrails	(686)
5		Operating Level	(660)	9		Paint	(674)	0		Terminals	(687)
5		Alignment Adqcy	(661)	2		Number Utilities	(675)	N		Revise Rating	(688)
9		Waterway Adqcy	(662)	7		Substructure	(676)	N		Repair Flag	(689)
6		DeckOverall	(663)	9		Chan/Protection	(677)	N		Card Check Flag	(690)
9		Drains Condition	(664)	9		Culvert	(678)			Photos Flag	(691)
1		Drain Status	(665)	N		Pier/Abut/Protect	(679)			Seasonal Code	(692)
N		Deck Scaling	(666)	N		Scour	(680)	N		Soundings Flag	(693)
0		Scaling Percent	(667)	6		Aproach/Rdwy	(681)			Measure Clearance	(694)
0		Deck Rutting	(669)	9		Retaining Walls	(682)	N		Monitor Structure	(695)
0		Exposed Rebar	(670)	9		Pier Protection	(683)				

1970	Year Built
1994	Year Rebuilt
F 80	Operating Rating
F 47	Inventory Rating
A	Open Closed Posted
99' 99"	Vertical Over Deck
15' 06"	Vertical Under
H	Vertical Under Code
91.54	Sufficiency Rating
0	Deficiency Flag

Element	Element Description	Total	Units	Env	State1	State2	State3	State4
12	Concrete Deck	10,660	SF	3	10,510	100	0	50
115	Prestress Concrete Girder	1,476	LF	3	1,473	3	0	0
205	Concrete Column / Pile	8	EA	3	8	0	0	0
215	Concrete Abutment	136	LF	3	136	0	0	0
234	Concrete Pier Cap / Crossbeam	136	LF	3	136	0	0	0
310	Elastomeric Bearing	18	EA	3	18	0	0	0
321	Concrete Approach Slab	2	EA	3	2	0	0	0
331	Concrete Bridge Railing	328	LF	3	328	0	0	0
362	Impact Damage	2	EA	4	1	1	0	0
371	Seismic - Transverse Restrainer	12	EA	3	12	0	0	0
405	Compression Seal / Polymer Header	120	LF	3	120	0	0	0
800	Asphaltic Concrete (AC) Overlay	10,660	SF	3	10,660	0	0	0

0	Bridge oriented South to North in convention with route direction.
12	Many transverse and longitudinal leaching cracks in bottom of deck a few with rust staining. Transverse and diagonal leaching cracks @ deck / diaphragm interface, Piers 2 & 3.
115	362: Many patches in girders in Span 2. Girder 2A has a high load hit spall, 12" x 8" x 2" deep (not patched). Girder 2C has a high load hit spall, 7" x 4" x 1" deep (not patched). Girder 2G has a high load hit spall, 8" x 4" x 1" deep (not patched).
205	Hairline map cracking on columns.
215	Few vertical leaching crack in abutment back walls. Girder seats have some debris on them from construction. Transverse stop at Girder D of Pier 1 spalled.
321	Longitudinal cracking in ACP overlay at both approach slabs. South slab has "D" spalling, ravelling, and showing concrete of existing approach slab.
331	NJBs have vertical hairline cracks throughout, some leaching.
405	Joints are partially filled with dirt and debris. South joint has potholing in polymer header about 6" diam. x 2" deep at centerline. Another smaller pothole is nearby. Both joints are leaking.
675	On West side, two 4" diam. galvanized steel pipes. At South abutment, two 4" diam., one 2 1/2" diam., and one 1 1/2" diam. galvanized steel pipes.
681	Very minor impact to bridge due to settlement.
687	Not to current AASHTO standards. Terminal is not slotted.
691	Roadway deck and elevation digital photos taken 7/13/2000.
800	Approximately 2" ACP. Some light rutting. Longitudinal paving seam starting to ravel and open up from South to North approach slab. At North end, high spot in right lane causing traffic to bounce.

Repair No	Priority	Repair Description	Date Noted

Printed On 12/11/2002

BATS | 4 | 0 | 2 | 1 **Status** Committed

BRIDGE INSPECTION REPORT

Agency Washington State

Printed On 08/08/2000

Bridge No.	405/55E	Structure Type	PCB
Bridge Name	NE 116TH ST OC	Route 00405	Intersecting NE 116TH ST
Structure ID	0008615A	MilePost 19.85	Location 1.7 N JCT SR 908

Inspection Frequency 24
Inspection Date 7/13/2000
Inspection Hours 001.0

Inspector's Signature HCR Indent# G0004

Co-Inspector's Signature SMP

7	Structural Adqcy	(657)	7	Superstructure	(671)	1		Bridge Rails	(684	1970	Year Built
7	Deck Geometry	(658)	9	Curbs	(672)	1		Transition	(685)	1994	Year Rebuilt
7	Underclearance	(659)	9	Sidewalks	(673)	1		Guardrails	(686)		
5	Operating Level	(660)	9	Paint	(674)	1	0	Terminals	(687)	F 80	Operating Rating
5	Alignment Adqcy	(661)	2	Number Utilities	(675)	N		Revise Rating	(688)	F 47	Inventory Rating
9	Waterway Adqcy	(662)	7	Substructure	(676)	N		Repair Flag	(689)		
6	DeckOverall	(663)	9	Chan/Protection	(677)	N		Card Check Flag	(690)	A	Open Closed Posted
9	Drains Condition	(664)	9	Culvert	(678)			Photos Flag	(691)	99'99"	Vertical Over Deck
1	Drain Status	(665)	N	Pier/Abut/Protect	(679)			Seasonal Code	(692)		
N	Deck Scaling	(666)	N	Scour	(680)	N		Soundings Flag	(693)	15'06"	Vertical Under
0	Scaling Percent	(667)	8	6 Aproach/Rdwy	(681)			Measure Clearance	(694)	H	Vertical Under Code
0	Deck Rutting	(669)	9	Retaining Walls	(682)	N		Monitor Structure	(695)		
0	Exposed Rebar	(670)	9	Pier Protection	(683)					91.54	Sufficiency Rating

Elem	Element Description	Total	Units	Env	State1	State2	State3	State4
12	Concrete Deck	10660	SF	3	10660	0	0	0
115	Prestress Concrete Girder	1476	LF	3	1476	0	0	0
205	Concrete Column / Pile	8	EA	3	8	0	0	0
215	Concrete Abutment	136	LF	3	136	0	0	0
234	Concrete Pier Cap / Crossbeam	136	LF	3	136	0	0	0
310	Elastomeric Bearing	18	EA	3	18	0	0	0
321	Concrete Approach Slab	2	EA	3	2	0	0	0
331	Concrete Bridge Railing	328	LF	3	328	0	0	0
358	Deck Cracking	1	EA	3	1	0	0	0
362	Impact Damage	612	EA	4	512	100	0	0
371	Seismic - Transverse Restrainer	12	EA	3	12	0	0	0
405	Compression Seal / Polymer Header	120	LF	3	120	0	0	0
800	Asphaltic Concrete (AC) Overlay	10660	SF	3	10660	0	0	0

0 No attenuator necessary.

12 358: Many transverse and longitudinal leaching cracks in bottom of deck a few with rust staining. Transverse and diagonal leaching cracks @ deck / diaphragm interface, piers 2 & 3.

115 362: Most girders in span 2 have traffic scrapes and spalls on bottom flanges. Many patches in girders in span 2. Girder 2A has a high load hit spall, 18" x 8" x 2" deep. Girder 2C has a high load hit spall, 7" x 4" x 1" deep. Vertical cracks in closure pour - girder interface at piers 2 and 3 girder line A.

205 Hairline map cracking on columns.

215 Few vertical leaching crack in abutment back walls. Girder seats have some debris on them from construction.

310 Bearings at abutments are almost completely hidden by stringer bottom & lateral stops.

321 Longitudinal cracking in ACP overlay at both approach slabs. South slab has "D" spalling, ravelling, and showing concrete of existing approach slab.

331 NJBs have vertical hairline cracks throughout, some leaching.

405 Joints are partially filled with dirt and debris. South joint has potholing in polymer header about 6" diam. x 1" deep. Another smaller pothole is nearby.

675 On West side, two 4" diam. galvanized steel pipes. At South abutment, two 4" diam., one 2 1/2" diam., and one 1 1/2" diam. galvanized steel pipes.

681 South approach cracking transversely. High spots cause traffic to bounce onto bridge.

687 Not to current AASHTO standards. Terminal is not slotted.

691 Photos taken today.

800 Approximately 2" new ACP. Some light rutting and gouges in ACP. Longitudinal paving seam starting to ravel and open up from South to North approach slab. At North end, high spot in right lane causing traffic to bounce.

Priority	Repair Description	Date Noted

BATS Codes 4 0 2 1

BRIDGE INSPECTION REPORT

Agency WASHINGTON STATE

Printed On 12/23/1998

Bridge No.	405/55E		Structure Type	PCB	
Bridge Name	NE 116TH ST OC	Route	00405	Intersecting	NE 116TH ST
Structure ID	0008615A	MilePost	19.85	Location	1.7 N JCT SR 908

Inspector's Signature RLS Indent# A1044 Co-Inspector's Signature EJS

Inspection Date 12/15/1998
Inspection Hours 001.0

7	Structural Adqcy (501)	9	Drains (509)	1	Bridge Rails (536)	Y	N	Repair Flag (550)
7	Deck Geometry (502)	9	Curbs (521)	1	Transition (536)		N	Card Check Flag (551)
3	Underclearance (503)	9	Sidewalks (522)	1	Guardrails (536)			Photos Flag (552)
5	Operating Level (504)	9	Paint (524)	1	Terminals (536)			Seasonal Code (553)
5	Alignment Adqcy (505)	9	Chan/Protection (529)	2	Number Utilities (525)		N	Soundings Flag (554)
9	Waterway Adqcy(506)	N	Pier/Abut/Protect (531)		Revise Rating (540)			Measure Clearance (555)
6	DeckOverall (507)	N	Scour (532)	24	Inspection Frequency(539)	N		Monitor Structure (556)
7	Superstructure (513)	8	Aproach/Rdwy (533)					
7	Substructure (526)	9	Retaining Walls (534)	N 0 0 0				
9	Culvert (530)	9	Pier Protection (535)	00	Deck Scaling(512)	88.41		Sufficiency Rating

Elem	Element Description	Total	Units	Env	State1	State2	State3	State4	State5
13	ConcDeck Unprotected w/AC Ovlay	10660	SF	3	10660	0	0	0	0
115	P/S Concrete Stringer	1476	LF	3	1476	0	0	0	0
205	Concrete Col/Pile Extension	8	EA	3	8	0	0	0	0
215	Concrete Abutment	136	LF	3	136	0	0	0	0
234	Concrete Cap	136	LF	3	136	0	0	0	0
302	Compression Joint Seal	120	LF	3	120	0	0	0	0
310	Elastomeric Bearing	18	EA	3	18	0	0	0	0
331	Concrete Bridge Railing	328	LF	3	328	0	0	0	0
359	Soffit	1	EA	3	0	0	0	1	0
362	Traffic Impact	612	LF	4	512	100	0	0	0

13 & 359
Approximately 2" new ACP. Some light rutting and gouges in ACP. Many transverse and longitudinal leaching cracks in bottom of deck a few with rust staining. Transverse and diagonal leaching cracks @ deck / diaphragm interface, piers 2 & 3.

115 & 362
Most stringers in span 2 have traffic scrapes on bottom flanges. Many patches in stringers in span 2. Stringer 2A has a high load hit spall, 18" x 8" x 2". Stringer 2C has a high load hit spall, 7" x 4" x 1".

215 Few vertical leaching crack in abutment back walls. Stringer seats have large amounts of debris on them from construction.

302 Joint header has been patched and new seal attached.

310 Bearings at abutments are almost completely hidden by stringer bottom & lateral stops.

331 NJB's have vertical hairline cracks throughout.

550 Patch header repair complete.

Priority	Repair Description	Date Noted

BRIDGE INSPECTION REPORT

WASHINGTON STATE

Bridge No 405/55E
Br Name NE 116TH ST OC
Structure ID 0008615A

Route 405
MP 19.85

Structure Type PCB
Intersecting NE 116TH ST
Location 1.7 N JCT SR 908

Kenzo R. Sakamoto
Inspector's Signature
BE-4 Title B1144 Identification No.

Co-inspector's Signature
Title Identification No.

4-2-96
Inspection Date
1.0
Hours on Site

Del	Elem No.	Pontis Element Description	Total Quantity	Units	Env	Condition State 1	Condition State 2	Condition State 3	Condition State 4	Condition State 5	Cond Code
	13	ConcDeck Unprotected w/AC Ovlay	10660	SF	3	10660					6
	115	P/S Concrete Stringer	1476	LF	3	1476					7
	205	Concrete Col/Pile Extension	8	EA	3	8					7
	215	Concrete Abutment	136	LF	3	136					7
	234	Concrete Cap	136	LF	3	136					7
	310	Elastomeric Bearing	18	EA	3	18					7
	331	Concrete Bridge Railing	328	LF	3	328					7
	359	Soffit	1	FL	3				1		-
	302	Compression Seal Joint	120	LF	3	96	20	4			6

Adequacy Appraisals

7 Gen Structural (501)
6 Gen Deck Geometry (502)
3 Gen Und'clearance (503)
5 _ Operating Lev (504)
5 _ App Rdwy Algn (505)
9 _ Waterway (506)

Traffic Safety(536)

1 _ Bridge Rails
1 _ Transition
1 _ Guardrails
1 _ Terminals

Condition Codes

6 Gen Deck Overall (507)
7 Gen Superstructure (513)
7 Gen Substructure (526)
9 Gen Culvert (530)
9 _ Drains (509)
9 _ Curbs (521)
9 _ Sidewalks (522)
9 _ Paint (524)
9 _ Chan & Prot (529)
N _ Pier/Abut (531)
N _ Scour (532)
8 _ Appr Rdwy (533)
9 _ Ret Walls (534)
9 _ Pier Prot (535)

Miscellaneous Fields

N0000 _____ Deck Scaling (512)
2 _____ Number of Utilities (525)
R * Inspecion Type (538)
24 _____ Inspection Frequency (539)
N _____ Revise Rating (540)

Repair done per Maint Loftin 9-16-96

Informational Fields

Year Last Painted
255 Operating Rating
236 Inventory Rating
1970 Year Built
1994 Year Rebuilt
88.41/FO Suff Rtng

Deck Sample Codes

6 6/87 Chlorides
/ Delamination
/ Rebar Cover

BATS CODES (Primary)

STD: 4021 1.0
PONTIS: / .

13 ~2" ACP CRACKED ALONG LONGI. JTS OBVIOUSLY RUTTED & HAS A FEW TRAFFIC GOUGES.

359 Many transv./Pattern/Longitudinal cracks in overhangs and especially between East Stringers, Many cracks are rusty stained. Cracking & leaching at deck/diaphragm interface.

115 Stringers 2D, 2E, 2F, 2G, 2H & 2I have bottom flange concr. patches (Area max. on 2I ≈ 2 □'). Stringer 2C, 2D & 2E have new Hi-Load scrapes max 1" deep x 8 □".

215 A few vert. leaching cracks in backwalls & beam seats. Some constr. debris on beam seats.

310 Bearings in place some are almost completely hidden by stringer bottom flanges & lateral stops.

331 Rails have vertical leaching cracks.

302 N. Abutment header spalled-patched-re spalled 1½"d x W x 4'L w/ #4 rusting rebar exposed in R.H. Lanes. Seal loose over 20'.

Last Inspection: 10/13/94 Last Updated: 01/18/95 Printed: 02/26/96 06:59:26

281.00

RLS

BATS 4 | 0 | 2 | 1 **Status** Committed

BRIDGE INSPECTION REPORT

Agency WASHINGTON

Printed On 09/26/2000

Bridge No.	405/55W			Structure Type	PCB
Bridge Name	NE 116TH ST OC	Route	00405	Intersecting	NE 116TH ST
Structure ID	0008615B	MilePost	19.85	Location	1.7 N JCT SR 908

Inspection Frequency 48
Inspection Date 7/13/2000
Inspection Hours 001.0

Inspector's Signature HCR Indent# G0004 Co-Inspector's Signature SMP

7	Structural Adqcy	(657)	7		Superstructure	(671)	1		Bridge Rails	(684	1969 Year Built
7	Deck Geometry	(658)	9		Curbs	(672)	1		Transition	(685)	1994 Year Rebuilt
7	Underclearance	(659)	9		Sidewalks	(673)	1		Guardrails	(686)	
5	Operating Level	(660)	9		Paint	(674)	1	0	Terminals	(687)	F 80 Operating Rating
8	Alignment Adqcy	(661)	2	1	Number Utilities	(675)	N		Revise Rating	(688)	F 47 Inventory Rating
9	Waterway Adqcy	(662)	7		Substructure	(676)			Repair Flag	(689)	
7	DeckOverall	(663)	9		Chan/Protection	(677)			Card Check Flag	(690)	A Open Closed Posted
9	Drains Condition	(664)	9		Culvert	(678)			Photos Flag	(691)	99'99" Vertical Over Deck
1	Drain Status	(665)	N		Pier/Abut/Protect	(679)			Seasonal Code	(692)	
N	Deck Scaling	(666)	N		Scour	(680)			Soundings Flag	(693)	15'06" Vertical Under
0	Scaling Percent	(667)	8	6	Aproach/Rdwy	(681)			Measure Clearance	(694)	H Vertical Under Code
0	Deck Rutting	(669)	9		Retaining Walls	(682)			Monitor Structure	(695)	
0	Exposed Rebar	(670)	9		Pier Protection	(683)					92.61 Sufficiency Rating

Elem	Element Description	Total	Units	Env	State1	State2	State3	State4
12	Concrete Deck	10660	SF	3	10660	0	0	0
115	Prestress Concrete Girder	1652	LF	3	0	1652	0	0
205	Concrete Column / Pile	8	EA	3	8	0	0	0
215	Concrete Abutment	130	LF	3	130	0	0	0
234	Concrete Pier Cap / Crossbeam	124	LF	3	124	0	0	0
310	Elastomeric Bearing	18	EA	3	18	0	0	0
321	Concrete Approach Slab	2	EA	3	2	0	0	0
331	Concrete Bridge Railing	328	LF	3	328	0	0	0
358	Deck Cracking	1	EA	3	1	0	0	0
371	Seismic - Transverse Restrainer	12	EA	3	12	0	0	0
405	Compression Seal / Polymer Header	130	LF	3	103	15	12	0
800	Asphaltic Concrete (AC) Overlay	10660	SF	3	0	10660	0	0

0 Shoulders 8' wide at West side. No attenuator inspection required.

12 358: Bottom of deck has transverse leaching cracks in East widening and overhangs.

115 Beams 1C and 1F have transverse leaching cracks in the top flange. Piers 2 and 3 have vertical cracks at girder line A in the girder - closure pour interface.

205 Original columns have hairline pattern cracking.

215 Construction debris on beam seats. Vertical leaching cracks in end walls.

321 Longitudinal paving seams opening up and ravelling. South overlay has a pothole 12" x 4" x 2" deep in lane 2 from right. North overlay has a 2' x 6" x 2" deep pothole in the far West lane.

331 NJBs have hairline vertical cracks, some leaching.

405 Polymer header rutting at South approach.

675 One 2 1/2" and one 1 1/2" galvanized steel pipes at South abutment.

681 South approach rutting. North approach is cracking and ravelling in all lanes. Lane 1 has a 2" x 6" x 2" deep "D" spall.

687 Not to current AASHTO standards. Terminal is not slotted.

691 Photos taken today.

800 ACP overlay 2" thick. Moderate wear in wheel lines. Lanes 2 and 3 rutting up to 1/2".

Priority	Repair Description	Date Noted

BRIDGE INSPECTION REPORT

WASHINGTON STATE

Bridge No 405/55W
Br Name NE 116TH ST OC
Structure ID 0008615B

Route 405
MP 19.85

Structure Type PCB
Intersecting NE 116TH ST
Location 1.7 N JCT SR 908

Inspector's Signature: Kengo R. Sakamoto
Title: BE-4 Identification No.: B-1144

Co-inspector's Signature: Ross Jackson
Title: Identification No.:

Inspection Date: 7/2/96
Hours on Site: 1.0

Del	Elem No.	Pontis Element Description	Total Quantity	Units	Env	Condition State 1	Condition State 2	Condition State 3	Condition State 4	Condition State 5	Cond Code
	13	ConcDeck Unprotected w/AC Ovlay	10660	SF	3	10660					7
	115	P/S Concrete Stringer 1652	~~1476~~	LF	3	~~1476~~ 1652					7
	205	Concrete Col/Pile Extension	8	EA	3	8					7
	215	Concrete Abutment	130	LF	3	130					7
	234	Concrete Cap	124	LF	3	124					7
	310	Elastomeric Bearing	18	EA	3	18					7
	331	Concrete Bridge Railing	328	LF	3	328					7
	359	Soffit	1	FL	3	1					-
	302	Compression Joint Seal	130	LF	3	~~130~~	15	12			

Adequacy Appraisals

7	Gen	Structural (501)
6	Gen	Deck Geometry (502)
3	Gen	Und'clearance (503)
5	_	Operating Lev (504)
8	_	App Rdwy Algn (505)
9	_	Waterway (506)

Traffic Safety(536)

1	_	Bridge Rails
1	_	Transition
1	_	Guardrails
1	_	Terminals

Condition Codes

7	Gen	Deck Overall (507)
7	Gen	Superstructure (513)
7	Gen	Substructure (526)
9	Gen	Culvert (530)
9	_	Drains (509)
9	_	Curbs (521)
9	_	Sidewalks (522)
9	_	Paint (524)
9	_	Chan & Prot (529)
N	_	Pier/Abut (531)
N	_	Scour (532)
8	_	Appr Rdwy (533)
9	_	Ret Walls (534)
9	_	Pier Prot (535)

Miscellaneous Fields

N0000	_____	Deck Scaling (512)
2	_	Number of Utilities (525)
		Inspeciton Type (538)
24	48 Mt	Inspection Frequency (539)
N	_	Revise Rating (540)

Informational Fields

	Year Last Painted
255	Operating Rating
236	Inventory Rating
1969	Year Built
1994	Year Rebuilt
89.47/FO	Suff Rtng

Deck Sample Codes

8	6/87	Chlorides
	/	Delamination
	/	Rebar Cover

BATS CODES (Primary)

STD: 4021 1.0
PONTIS: _____ _____

	BOTTOM OF DECK, TRANSVERSE
359	LEACHING CRACKS IN OVERHANGS
	PATTERN LEACHING CRACKING BTWN
	GIRDERS
13	ACP 2" RUTTED WHEEL WEAR
215	DEBRIS FROM CONSTR. LEFT ON
	BM SEATS
	LEACHING CRACKS IN BACKWALL
	NORTH ABUT WALL
302	COMPRESSION JT SEAL - TWO RT LANES
	12' LONG 1/2 DEPTH BY W HEADER
	SPALLED SEAL IS BULGED UP.
331	BARRIERS HAVE HAIRLINE VERTICAL
	CRACKS
115	A COUPLE STRINGERS HAVE TOP FLANGE
	LEACHING CRACKS

Last Inspection: 10/13/94 Last Updated: 01/18/95 Printed: 02/26/96 06:59:29

281.00

RLS

BRIDGE INSPECTION REPORT

WASHINGTON STATE

Bridge No 405/55W
Br Name NE 116TH ST OC
Structure Id 0008615B

Route 405
MP 019.85

Structure Type PCB
Intersecting NE 116TH ST
Location 1.7 N JCT SR 908

Inspector's Signature: Paul Smith
Title: TES
Identification No.: A1044

Co-Inspector's Signature: [illegible]
Title: BE 2
Identification No.:

Inspection Date: 10/13/94
Hours on Site: 8.5

Page 1 of 1

D e l	Elem No.	Pontis Element Description	Total Quantity	Units	E n v	Condition State 1	Condition State 2	Condition State 3	Condition State 4	Condition State 5	Cond Code
	13	Concrete Deck - Unprotected w/ A (10660)	9672	SF	3					7	6
	115	P/S Conc Stringer (1476)	1302	LF	3						7
	205	Reinforced Conc Column or Pile E	8	EA	3						7
	215	Reinforced Conc Abutment (130)	110	LF	3						7
	234	Reinforced Conc Cap (124)	104	LF	3						7
	~~302~~	~~Compression Joint Seal (130)~~	~~110~~	~~LF~~	~~3~~						~~7~~
	310	Elastomeric Bearing	18	EA	3						7
	331	Concrete Bridge Railing (328)	372	LF	3						7
	359	Soffit (or under surface) Cracki	1	EA	3		1				

Adequacy Appraisals

7	Gen	Structural (501)
6	Gen	Deck Geometry (502)
6	Gen	Und'clearance (503)
5	___	Operating Lev (504)
8	___	App Rdwy Algn (505)
9	___	Waterway (506)

Traffic Safety (536)

1	1	Bridge Rails
0	1	Transition
1	1	Guardrails
1	1	Terminals

Condition Codes

6	Gen	Deck Overall (507)
7	Gen	Superstructure (513)
7	Gen	Substructure (526)
9	Gen	Culvert (530)
5	9	Drains (509)
0	9	Curbs (521)
9	___	Sidewalks (522)
9	___	Paint (524)
9	___	Chan & Prot (529)
N	.	Pier/Abut (531)
N	___	Scour (532)
8	___	Appr Rdwy (533)
9	___	Ret Walls (534)
9	___	Pier Prot (535)

Miscellaneous Fields

N0000	___	Deck Scaling (512)
0	2	Number of Utilities (525)
-	___	Inspection Type (538)
24	___	Inspection Frequency (539)
N		Revise Rating (540)

Informational Fields

-	Year Last Painted
255	Operating Rating
236	Inventory Rating
1969	Year Built
0000	Year Rebuilt
087.80 /0	Suff Rtng

Deck Sample Codes

8	6/87	Chlorides
-	--/--	Delamination
-	--/--	Rebar Cover

BATS CODES

STD: 4021 = 0.4
PONTIS: P4021 = 0.1

13	Bottom of deck has transverse
359	leaching cracks in E. widening
	and o'hangs. New 2" ACP.
115	Beams 1C & 1F have transverse
	leaching cracks in the top flange.
215	Construction debris on beam
	seats.
331	New NJBs have hairline vertical
521	cracks.

Last Updated: 12/92 Generated: 04/25/1994 16:58:11 Printed: 04/26/94 01:40 AM

BRIDGE INSPECTION REPORT — WASHINGTON STATE

NUMBER 405/55W
NAME NE 116TH ST OC
IDENT. 0008615B DIST 1

ROUTE 405 M.P. 019.85
INTERSECTING NE 116TH ST
LOCATION 1.7 N JCT SR 908

INSPECTOR'S SIGNATURE David R Brown
TITLE BE4 IDENTIFICATION NO. A1102

CO-INSPECTOR'S SIGNATURE George Chang
TITLE CE1 IDENTIFICATION NO.

INSP DATE 12/9/92
HOURS ON SITE 1.0
PAGE 1 OF 1

ADEQUACY APPRAISALS

- [ ] 7 STRUCTURE(1)
- [ ] 5 OPERATING LEVEL(4)
- [ ] 6 DECK GEOMETRY(2)
- [ ] 8 APP ROADWAY ALIGNMENT(5)
- [ ] 6 UNDER-CLEARANCES(3)
- [ ] 9 WATERWAY(6)

DECK CONDITIONS

- [ ] 7 OVERALL(7) C-8
- [6] 7 VISUAL(8)
- [ ] 6 SURFACING(10)
- [5] 7 DRAINS(9)
- [ ] 7 DECK JOINTS(11)
- [ ] N0000 SCALING(12)

SUPERSTRUCTURE

- [ ] 7 OVERALL(13)
- [ ] 9 STRINGERS(14)
- [ ] 7 BEARING DEVICES(20)
- [ ] 9 FLOOR-BEAMS(15)
- [ ] 7 CURBS(21)
- [ ] 7 LONGITUDINAL BEAMS(16)
- [ ] 9 SIDE-WALKS(22)
- [ ] 9 TRUSSES(17)
- [ ] 7 RAILS(23)
- [ ] 9 ARCHES(18)
- [ ] 9 PAINT(24)
- [ ] 9 GIRDERS(19)
- [ ] 0 NUMBER OF UTILITIES(25)

SUB-STRUCTURE

- [ ] 7 OVERALL(26)
- [ ] 7 ABUTMENTS(27)
- [ ] 7 INTERMEDIATE BENTS(28)

GENERAL CONDITIONS

- [ ] 9 CHANNEL & CHAN PROT(29)
- [ ] 8 APPROACH ROADWAY(33)
- [ ] 9 CULVERTS(30)
- [ ] 9 RETAINING WALLS(34)
- [ ] N PIER/ABUT PROT CODE(31)
- [ ] 9 PIER PROT COND(35)
- [ ] N SCOUR(32)

- [ ] 1011 TRAFFIC SAFETY(36)
- [ ] PROGRAM YEAR(37)
- [PVH] INSPECTION TYPE(38)
- [ ] 24 INSPECTION FREQUENCY(39)
- [ ] N REVISE RATING(40)

552 OP RATING
236 INV RATING

8 Transverse Leaching Cracks in the Overhangs, A Few Are Rust Colored.

9 One Drain on Deck is Completely Plugged With Dirt.

10 ≈ 1½" of ACP is Rutting in the Wheel Lines. A Couple of ACP Spalls ≈ 1# Max.

11 Deck Joint Seals Are Pushing Down And Beginning to Leak.

27 Vertical Leaching Cracks in N. Abutment Back Wall.

28 Closure Pour Cracks At Interfaces With PCB.'s over Interior Piers.

Bridge widened in 1994. BDJ

DOT FORM 234-033

SUFFICIENCY RATING 88.93

YEAR BLT /REBUILT 1969/0000

STRUCTURE TYPE PCB

FED. ROAD DIV. NO.	STATE	FED. AID PROJ. NO.	FISCAL YEAR	SHEET NO.	TOTAL SHEETS
8	WASH.	RS-025-1(8)		3	7

N.P. R.R. CURVE DATA
3° C.L. S=2°30'
36°-00' 5-33 ch.
TA = 41°-00'

Note: All stations shown refer to points on ℄ S.S.H. 2-A
Elevations shown are finish grades.

T 26N., R.5E., W.M.
SE.¼ S.W.¼ Sec. 28

S.S.H. No. 2-A
CURVE DATA
Δ = 27°-22' Lt.
CA = 24°-42'
D = 1°-20'
R = 4297.5
T = 1146.4
L = 1852.5
P.I. = 657+35.70
CS = 666+41.80
ST. = 668+41.80 (Bearing = N.21°40'W.)
SPIRAL DATA
a = 2/3
L' = 2.0
de = 1°-20'

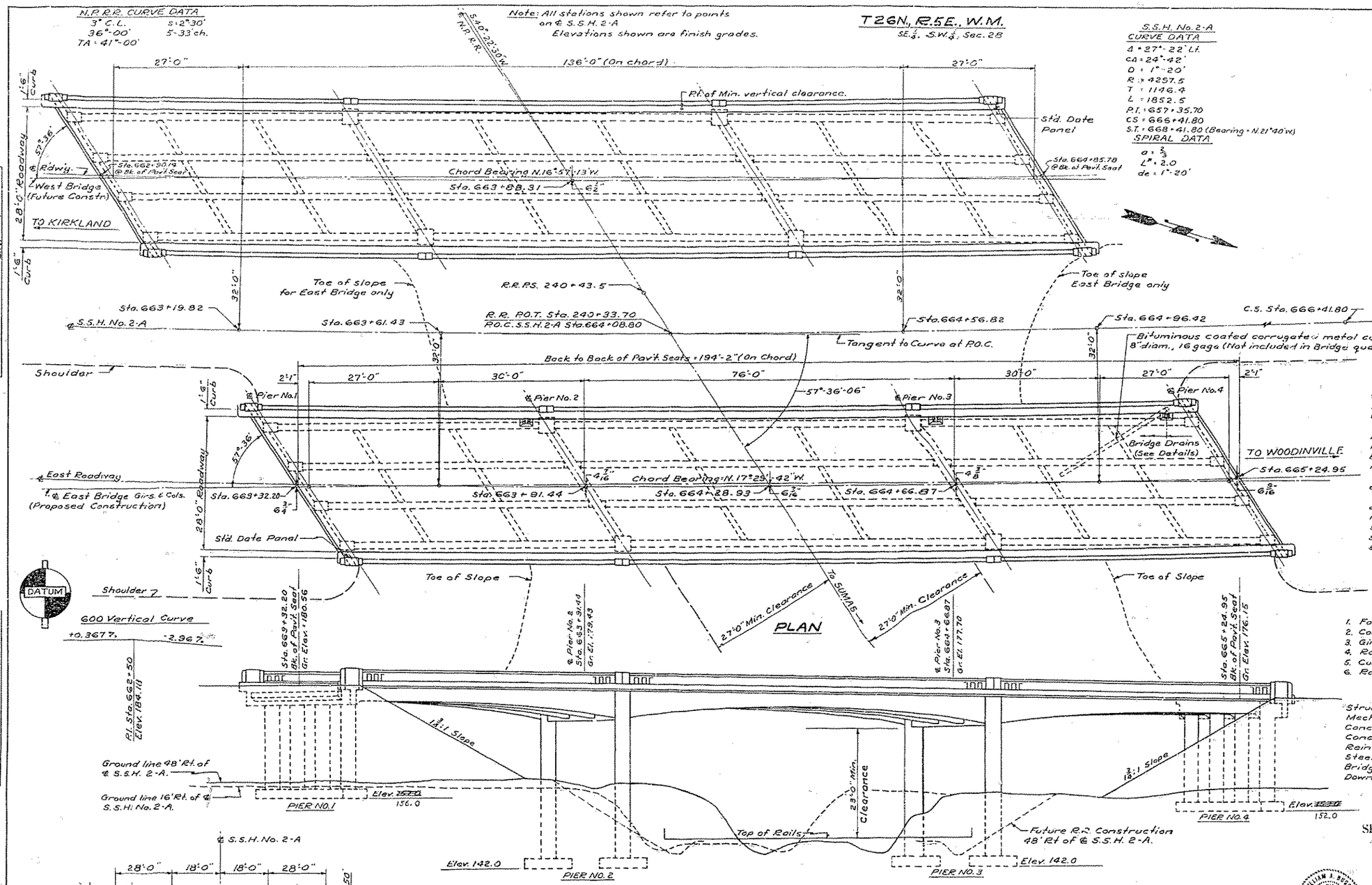

ELEVATION OF EAST BRIDGE

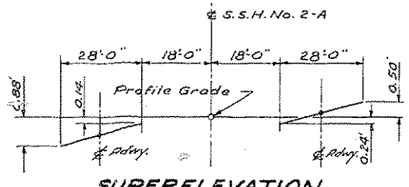

SUPERELEVATION
For full length of bridge

TEST HOLE No. 1 - Sta. 663+75 - 40' left
Ground Elev. 158.0 - Alternate layers of fine sand and silt seams - hard.
Elev. 143.5 - Sand and gravel - Compact.

TEST HOLE No. 2 - Sta. 664+75 - 40' right
Ground Elev. 158.0 - Alternate layers of fine sand and silt seams - hard.
Elev. 145.0 - Sand and gravel - Compact.

DATE	REVISION	BY	APPROVED
6-6-58	Construction Changes Shown in Red		
5-10-55	Altered Superelevation - Added Test Hole Data	L.M.R.	W.H.R.

GENERAL NOTES

All material and work shall be in accordance with the requirements of the State of Washington, Department of Highways, Standard Specifications for Road and Bridge Construction, dated April 1948.

Footing elevations are subject to change depending upon foundation material encountered, and reinforcing steel for footings and columns shall not be cut until final footing elevations have been determined in the field.

Concrete in footings shall be class B mix. All other concrete shall be class A mix.

Falsework shall not be released in any span until all concrete, except railings, has been in place the required length of time and has developed sufficient strength as outlined in the specifications. Falsework shall be carefully released to prevent impact or undue stresses in the structure.

SEQUENCE OF POURING

	Class of Concrete
1. Footings.	Class B Mix.
2. Columns.	" A "
3. Girders, Cross Beams & End Walls.	" A "
4. Roadway Slab.	" A "
5. Curbs, Rail Bases and End Posts.	" A "
6. Railings.	" A "

QUANTITIES

Structure Excavation.	420 Cu. Yds.
Mechanical Tamper.	2 Days
Concrete Class A.	442 Cu. Yds.
Concrete Class B.	58 Cu. Yds.
Reinforced Concrete Bridge Railing.	394 Lin. Ft.
Steel Reinforcing Bars.	122,000 Lbs.
Bridge Drains.	3 Only
Downspouts.	40 Lin. Ft.

LOADING H20-S16-44

SECONDARY STATE HIGHWAY NO. 2-A
N. P. RY. OVERCROSSING
KING COUNTY

LAYOUT

WASHINGTON STATE HIGHWAY COMMISSION
DEPARTMENT OF HIGHWAYS
OLYMPIA, WASHINGTON

R. A. Mosier, Chairman
H. E. Hendrix, Member — H. E. Morgan, Member
F. C. Huntley, Member — Oscar E. Stone, Member

APPROVED May 4, 1955 — APPROVED
DIRECTOR OF HIGHWAYS — BRIDGE ENGINEER
CONTRACT NUMBER 4978

SHEET 6 OF 10 SHEETS

2-A-387-1

2-A
35

FED. ROAD DIV. NO.	STATE	FED. AID PROJ. NO.	FISCAL YEAR	SHEET NO.	TOTAL SHEETS
8	WASH.	FG-025-1(8)		4	7

Note: All Piers are parallel, and all girders are parallel to chord bearing shown.

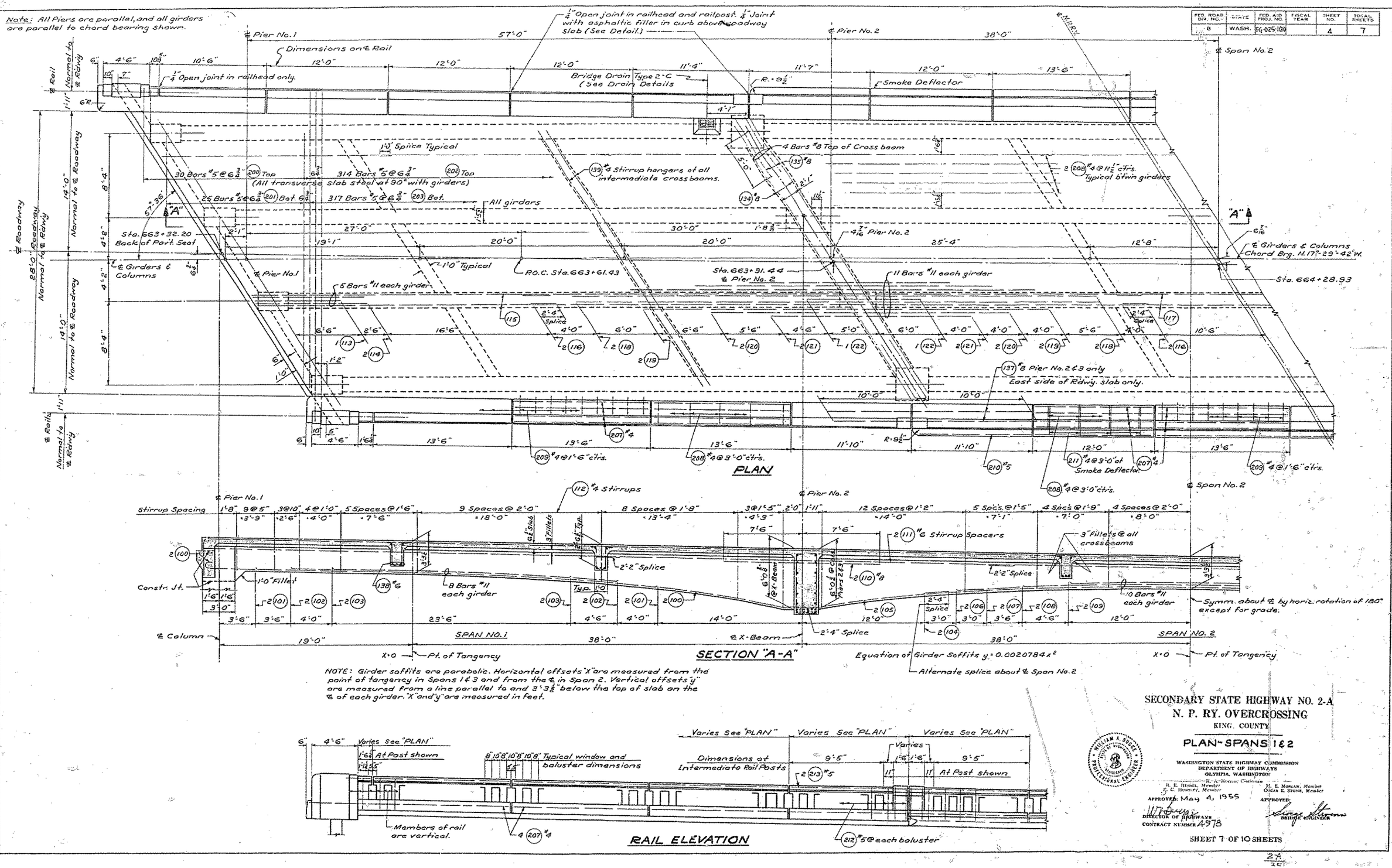

NOTE: Girder soffits are parabolic. Horizontal offsets "X" are measured from the point of tangency in Spans 1 & 3 and from the ℄ in Span 2. Vertical offsets "y" are measured from a line parallel to and 3'-3 1/2" below the top of slab on the ℄ of each girder. "X" and "y" are measured in feet.

SECONDARY STATE HIGHWAY NO. 2-A
N. P. RY. OVERCROSSING
KING COUNTY

PLAN - SPANS 1 & 2

WASHINGTON STATE HIGHWAY COMMISSION
DEPARTMENT OF HIGHWAYS
OLYMPIA, WASHINGTON

H. E. HINKEL, Member — H. ALDERSON, Chairman — M. E. MORGAN, Member — F. C. HUNTLEY, Member — OSCAR E. STONE, Member

APPROVED: May 4, 1955 — DIRECTOR OF HIGHWAYS

APPROVED: BRIDGE ENGINEER

CONTRACT NUMBER 4978

SHEET 7 OF 10 SHEETS

Designing Engineer	
Designed	W.A.B.
Design Checked (E.C.K.)	J.S.M.
Traced	W.L.G.
Quantities Figured	W.A.B.
Quantities Checked	J.S.M.

Date	By	
MAY 1955	J.M.R.	Revised Rail Dimensions

Drawn	
Traced	
Checked	
Asst. Engr.	
Bridge Engr.	

2A-387-3

13/15

27/28

FED. ROAD DIV. NO.	STATE	FED. AID PROJ. NO.	FISCAL YEAR	SHEET NO.	TOTAL SHEETS
6	WASH.	FG-025-1(20)		5	7

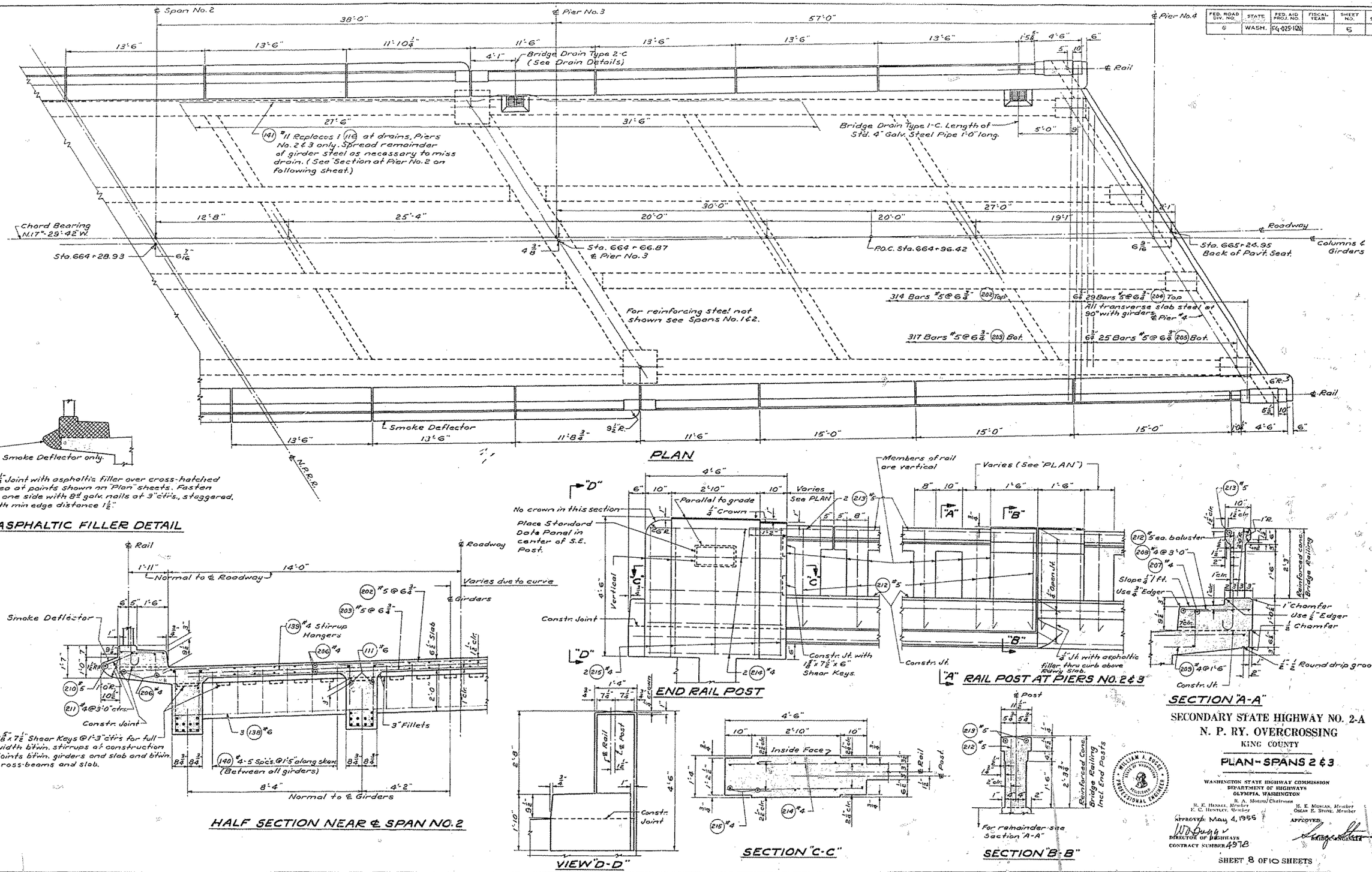

PLAN

¼" Joint with asphaltic filler over cross-hatched area at points shown on "Plan" sheets. Fasten to one side with 8d galv. nails at 3" ctrs., staggered, with min edge distance 1½".

ASPHALTIC FILLER DETAIL

HALF SECTION NEAR ℄ SPAN NO. 2

END RAIL POST

RAIL POST AT PIERS NO. 2 & 3

SECTION "A-A"

VIEW "D-D"

SECTION "C-C"

SECTION "B-B"

SECONDARY STATE HIGHWAY NO. 2-A
N. P. RY. OVERCROSSING
KING COUNTY

PLAN - SPANS 2 & 3

WASHINGTON STATE HIGHWAY COMMISSION
DEPARTMENT OF HIGHWAYS
OLYMPIA, WASHINGTON
R. A. Moisio, Chairman
R. E. Henkel, Member
E. C. Huntley, Member
H. E. Morgan, Member
Oscar E. Stone, Member

APPROVED: May 4, 1955
DIRECTOR OF HIGHWAYS
CONTRACT NUMBER 4978

APPROVED:
BRIDGE ENGINEER

SHEET 8 OF 10 SHEETS

2A-387-4

2-A / 35

FED. ROAD DIV. NO.	STATE	FED. AID PROJ. NO.	FISCAL YEAR	SHEET NO.	TOTAL SHEETS
8	WASH.	FG-025-1(8)		6	7

Elevations at Back of Pavt. Seat	Elev. "A"	Elev. "B"	Elev. "C"
Pier No. 1	180.35	180.56	180.77
Pier No. 4	176.02	176.15	176.29

Elevations on ℄ Pier	Elev. "A"	Elev. "B"	Elev. "C"
Pier No. 2	179.24	179.43	179.61
Pier No. 3	177.54	177.70	177.85

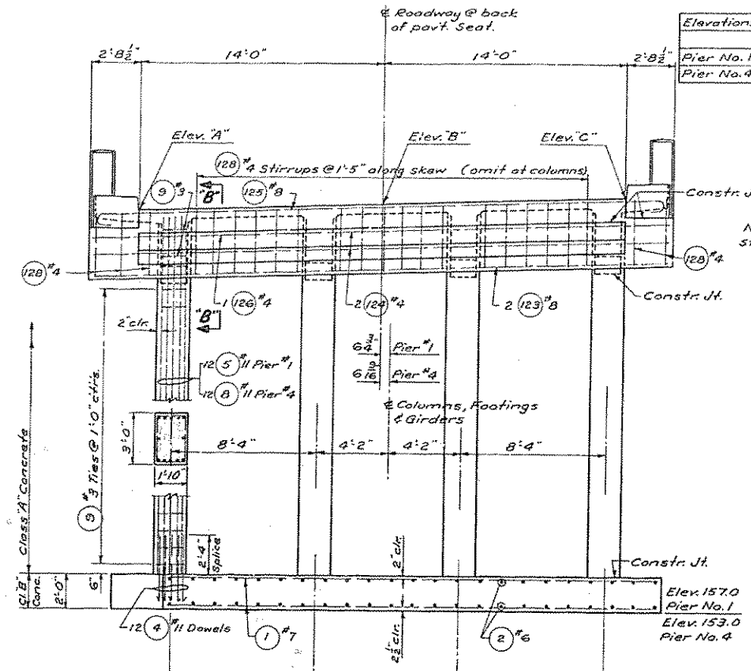

END ELEVATION - PIER NO. 1

Pier No. 4 Similar and as shown

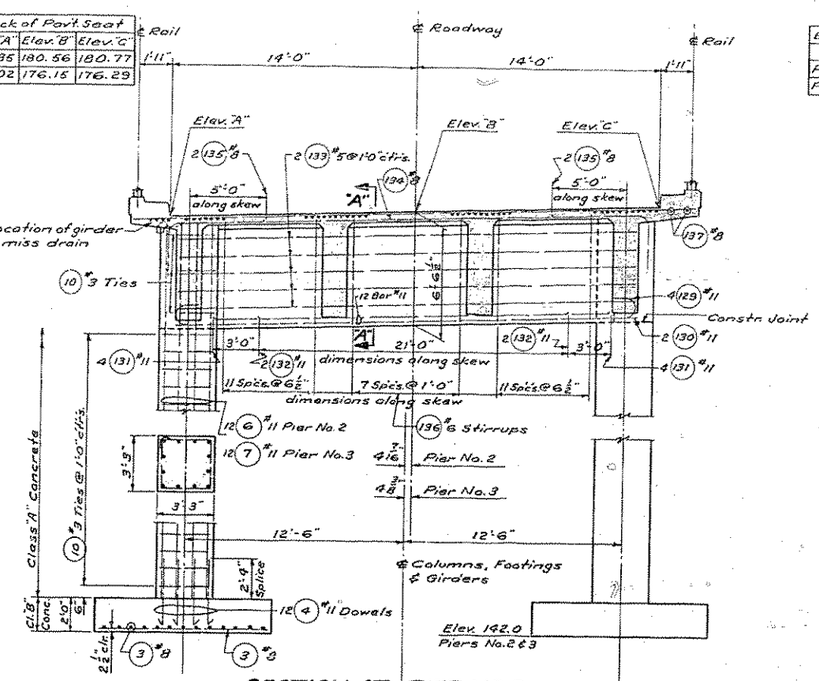

SECTION AT PIER NO. 2

Pier No. 3 Similar and as shown

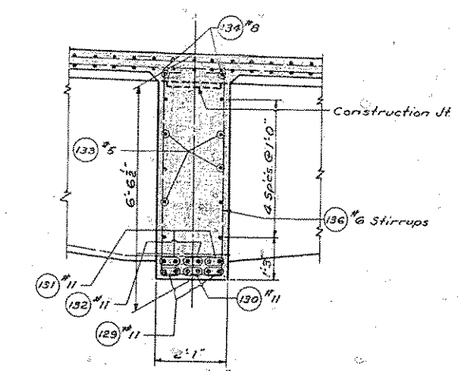

SECTION "A-A"

Normal to X-Beam

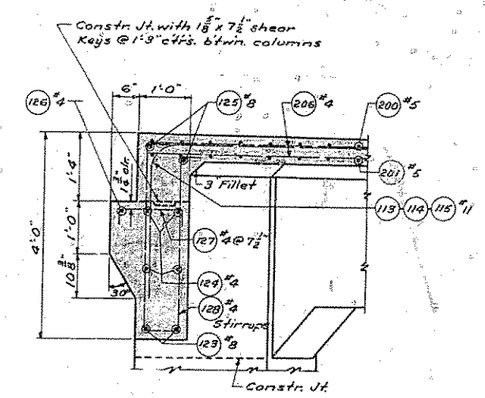

SECTION "B-B"

Normal to X-Beam

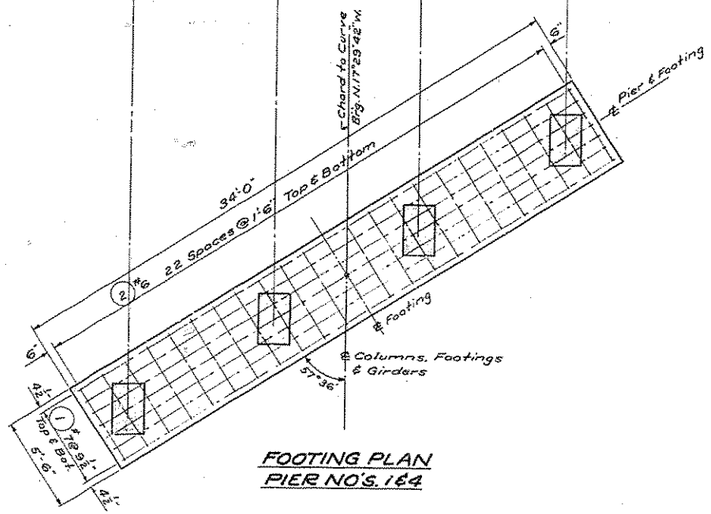

FOOTING PLAN

PIER NO'S. 1 & 4

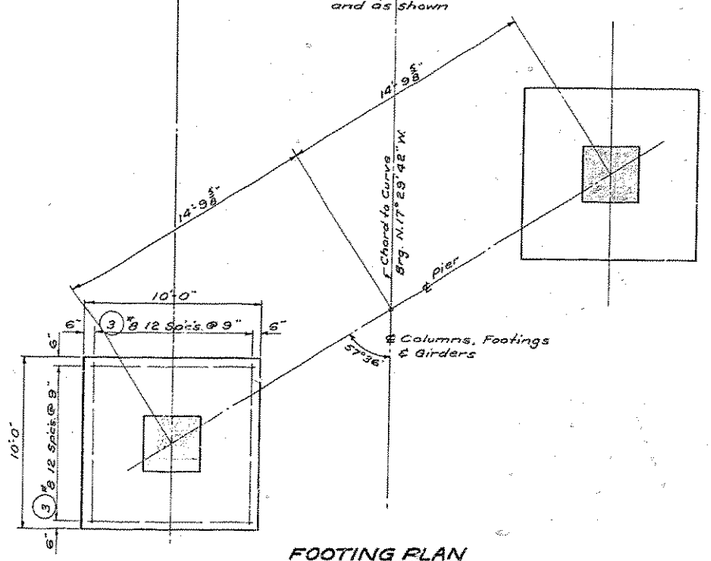

FOOTING PLAN

PIER NO'S. 2 & 3

SECONDARY STATE HIGHWAY NO. 2-A

N. P. RY. OVERCROSSING

KING COUNTY

PIERS

WASHINGTON STATE HIGHWAY COMMISSION
DEPARTMENT OF HIGHWAYS
OLYMPIA, WASHINGTON

R. A. MOSER, Chairman
R. E. HENSLEY, Member
E. C. HUNTLEY, Member
H. E. MORGAN, Member
OSCAR V. STRANDE, Member

APPROVED: May 4, 1966

W. Buger
DIRECTOR OF HIGHWAYS

APPROVED:

CHIEF ENGINEER

CONTRACT NUMBER 4978

SHEET 9 OF 10 SHEETS

WILLIAM A. BUGGE — STATE OF WASHINGTON — REGISTERED PROFESSIONAL ENGINEER

Designing Engineer	L. M. R.	Feb. 1965
Designed		
Checked	Thomas Chiabotti (R.E.E.)	
Traced		
Quantities Figured		
Quantities Checked		

By	L. M. R.	Mar. 1965
Drawn		
Traced		
Checked		
Quantities Figured		
Dist. Engr.		

2A-387-5

134/149

2-A/35

FED. ROAD DIV. NO.	STATE	FED. AID PROJ. NO.	FISCAL YEAR	SHEET NO.	TOTAL SHEETS
8	WASH.	FG-075-1(8)		7	7

BAR LIST

All dimensions are out to out.
All reinforcing steel shall conform to A.S.T.M. Specifications A-305

MARK	LOCATION	NO.	SIZE	LENGTH	BENDING DIAGRAM
1	Piers No.1 & 4 Ftg. Longit. Top & Bot.	28	7	33'-6"	Str.
2	" " " " Transv. " "	92	6	5'-2"	Str.
3	" " 2 & 3 Ftg. Longit. & Transv.	104	8	9'-8"	Str.
4	" " 1, 2, 3, & 4 Column Dowels	144	11	5'-6"	
5	Pier No.1 Column Vertical	48	11	Varies	Str. 12 ea. @ 21'-0", 21'-2", 21'-3" & 21'-5"
6	" " 2 " "	24	11	Varies	Str. 12 ea. @ 34'-11", 35'-3"
7	" " 3 " "	24	11	Varies	Str. 12 ea. @ 33'-3", 33'-6"
8	" " 4 " "	48	11	Varies	Str. 12 ea. @ 20'-8", 20'-9", 20'-10", 20'-11"
9	" " 1 & 4 Column Ties	152	3	9'-4"	
10	" " 2 & 3 " "	124	3	12'-8"	
100	Girder - Bottom - Spans 1 & 3	16	11	61'-0"	
101	" " " 1 & 3	16	11	39'-6"	Str.
102	" " " 1 & 3	16	11	32'-0"	Str.
103	" " " 1 & 3	16	11	23'-6"	Str.
104	" " Span 2	8	11	65'-6"	
105	" " " 2	8	11	15'-6"	
106	" " " 2	8	11	46'-0"	Str.
107	" " " 2	8	11	40'-0"	Str.
108	" " " 2	8	11	33'-0"	Str.
109	" " " 2	8	11	24'-0"	Str.
110	Girder Web - Top at Piers No. 2 & 3	16	11	15'-0"	Str.
111	" Stirrup Spacers	40	6	40'-6"	Str.
112	" Stirrups	540	4	Varies	
113	" Top - at Piers No. 1 & 4	8	11	10'-11"	
114	" " " " " 1 & 4	16	11	13'-5"	
115	" " " " " 1 & 4	16	11	32'-3"	
116	" " " " " 2 & 3	14	11	59'-0"	Str.
117	" " " " " 2 & 3	8	11	25'-8"	Str.
118	" " " " " 2 & 3	16	11	51'-0"	Str.
119	" " " " " 2 & 3	16	11	39'-6"	Str.
120	" " " " " 2 & 3	16	11	29'-0"	Str.
121	" " " " " 2 & 3	16	11	19'-6"	Str.
122	" " " " " 2 & 3	8	11	11'-0"	Str.
123	Endwall - Bottom - at Piers 1 & 4	4	8	Varies	Str. 2 ea. @ 39'-9", 38'-10"
124	" - Middle " " 1 & 4	8	4	Varies	Str. 4 ea. @ 39'-9", 38'-10"
125	" - Top " " 1 & 4	4	8	Varies	
126	" - Pavt. Seat - Transv. 1 & 4	2	4	Varies	Str. 1 ea. @ 33'-4", 32'-4"
127	" " " Longit. 1 & 4	105	4	2'-3"	
128	" Stirrups Pier No. 1 & 4	46	4	8'-8"	
129	Cross Beam - Bottom at Piers # 2 & 3	8	11	34'-11"	
130	" " " " " 2 & 3	4	11	32'-1"	Str.
131	" " " " " 2 & 3	8	11	27'-0"	Str.
132	" " " " " 2 & 3	4	11	21'-0"	Str.
133	" " - Middle " " 2 & 3	20	5	32'-1"	Str.
134	" " - Top " " 2 & 3	4	8	39'-9"	
135	" " " " " 2 & 3	8	8	10'-2"	
136	" " - Stirrups " " 2 & 3	64	6	14'-9"	
137	Girder - in slab at Piers # 2 & 3	4	8	20'-0"	Str.
138	Intermediate Cross Beam - Bottom	18	6	31'-0"	Str.
139	" " " Stirrup Hang.	12	4	29'-7"	Str.
140	" " " Stirrups	108	4	6'-0"	
141	Girder Web - Top - at Pier # 2 & 3	2	11	59'-2"	
200	Roadway Slab - Transv. - Top - Pier # 1	30	5	Varies	Str. Vary 4'-0" to 29'-9"
201	" " " - Bot. " 1	25	5	Varies	Str. Vary 3'-4" to 24'-9"
202	" " " - Top	314	5	32'-4"	Str.
203	" " " - Bot.	317	5	25'-0"	Str.
204	" " " - Top - Pier # 4	29	5	Varies	Str. Vary 3'-10" to 29'-3"
205	" " " - Bot. " 4	25	5	Varies	Str. Vary 2'-9" to 24'-3"
206	" " Longit. - Top & Bot.	306	4	22'-5"	Str.
207	" Curb Longit.	116	4	Varies	Str. 40 @ 13'-2"; 20 @ 11'-8"; 12 ea. @ 11'-3" &
208	" " Transv.	132	4	2'-1"	Str. 11'-6", 8 ea. @ 19'-7", 14'-8", 4 ea. @ 11'-0", 11'-5", 16'-0", 20'-7"
209	Roadway Curb to Slab Ties	264	4	3'-2"	
210	Smoke Deflector - Longit. - Span 2	12	5	Varies	Str. 6 @ 13'-2", 2 ea. @ 10'-11", 11'-1", 11'-8"
211	" " - Transv. " 2	54	4	3'-1"	
212	Rail Balusters	261	5	3'-9"	
213	Rail Head	66	5	Varies	Str. 24 @ 13'-2"; 10 @ 11'-8"; 6 ea. @ 11'-3", 11'-6"
214	Rail Post - Horizontal	40	5	4'-2"	Str. & 14'-8", 4 @ 2'-6"; 2 ea. @ 2'-0", 1'-10"
215	Rail Post - Vertical	40	5	4'-1"	Str. & 10'-2", 11'-5" & 11'-0"

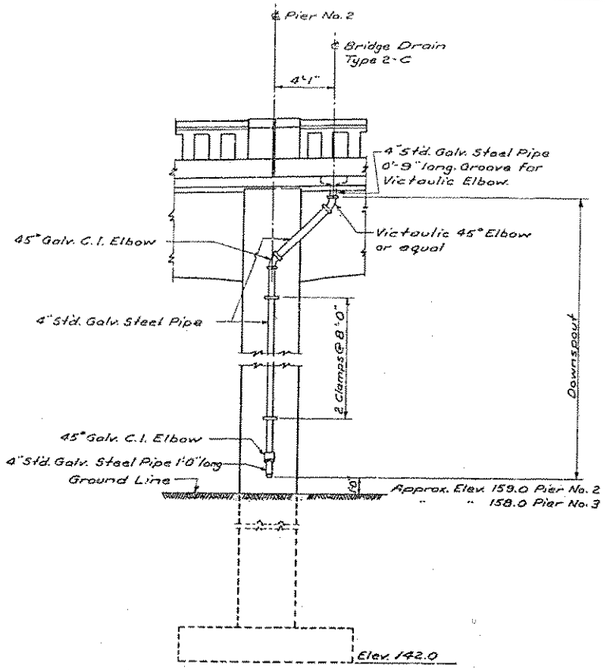

DRAINAGE DETAIL AT PIER NO. 2

Detail similar to Pier No. 3 - see PLAN.

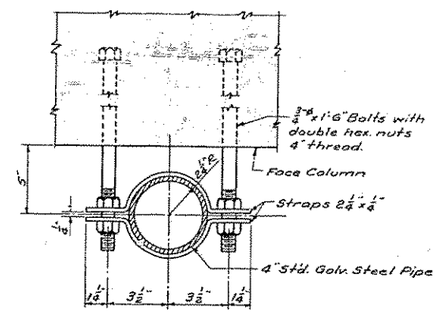

DRAIN PIPE CLAMP

4 Units Required (Galv.)
(To be included in bid item for downspouts)

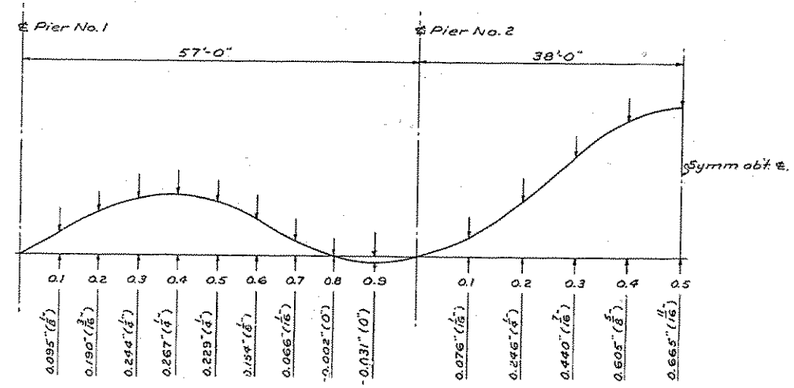

DEAD LOAD CAMBER CURVE

Note: This curve shows the computed dead load camber only and should be increased by the amount of anticipated take-up in the falsework.

SECONDARY STATE HIGHWAY NO. 2-A
N. P. RY. OVERCROSSING
KING COUNTY

BAR LIST

WASHINGTON STATE HIGHWAY COMMISSION
DEPARTMENT OF HIGHWAYS
OLYMPIA, WASHINGTON

R. A. MORSON, Chairman
R. E. HENSEL, Member — H. E. MORGAN, Member
E. C. HUNTLEY, Member — OSCAR R. STONE, Member

APPROVED May 4, 1955 — DIRECTOR OF HIGHWAYS
APPROVED — BRIDGE ENGINEER
CONTRACT NUMBER 4978

SHEET 10 OF 10 SHEETS

2A-387-6

134/148

2-A/35

FED. ROAD DIV. NO.	STATE	FED. AID PROJ. NO.	FISCAL YEAR	SHEET NO.	TOTAL SHEETS
8	WASH.	FG-025-(8)		7-A	7

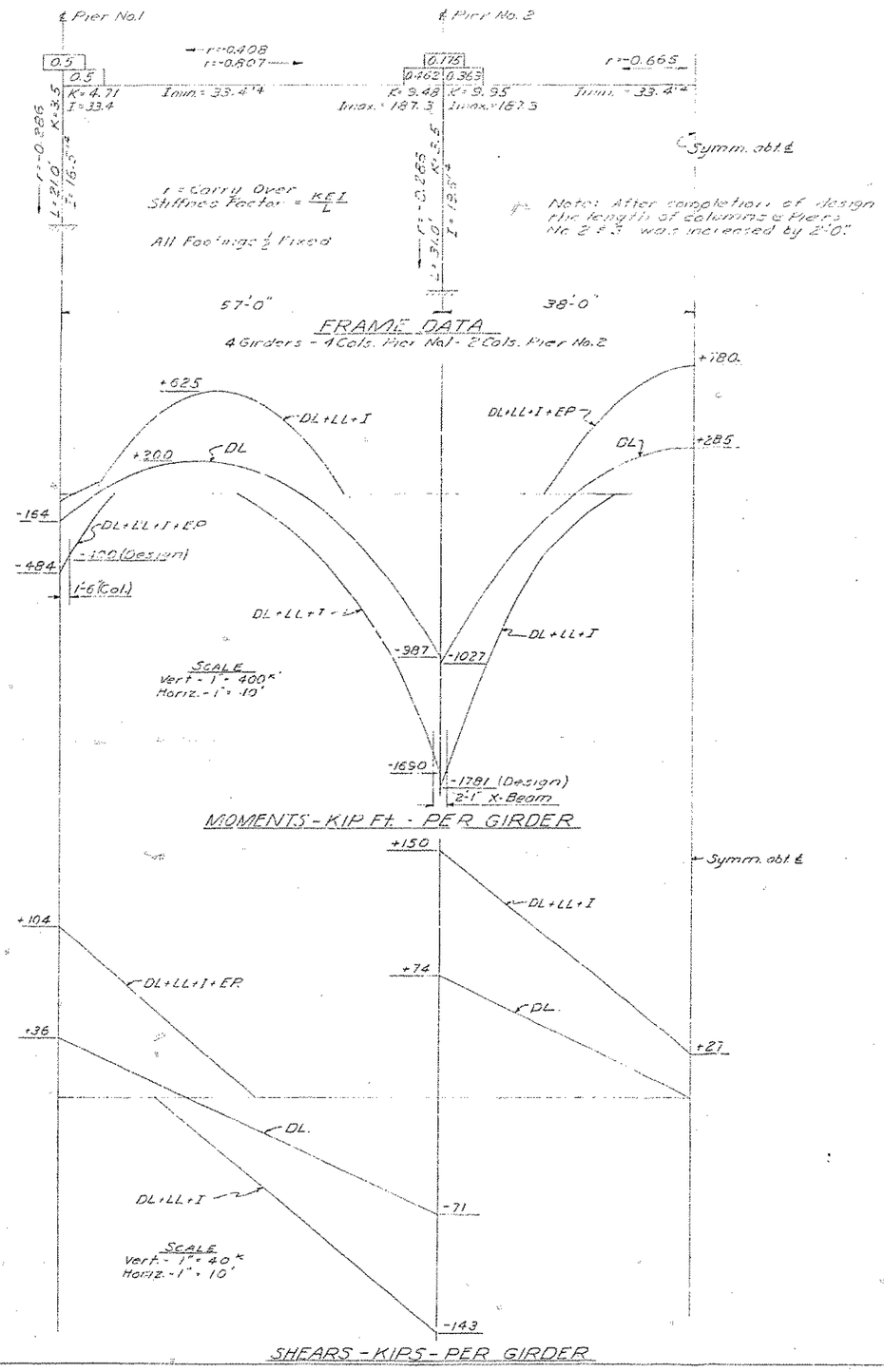

LOADS

DEAD LOADS (PER GIRDER)

Uniform Load including intermediate cross beams = 1.72 ^k/ft.
Haunches - concentrated = 8.87 ^k
Haunches - Equivalent at support = 0.700 ^k/ft.

LIVE LOADS (Including 30% impact) Per Girder

H20 - S16 - 44 (Truck or Lane)

LANE LOADING

Uniform Load = 0.695 ^k/ft.
Concentrated load for Moment = 19.5 ^k
Concentrated load for Shear = 28.2 ^k

TRUCK LOADING

8.68^k 34.7^k 34.7^k
14'-0" 14'-0" to 30'-0"

ALLOWABLE UNIT STRESSES

A.A.S.H.O. Specifications

STRESS	CLASS "A" CONC.	CLASS "B" CONC.
f'c	3600 psi	3000 psi
fc	1440 psi	1200 psi
fs (except stirrups)	20,000 psi	20,000 psi
fs (stirrups)	18,000 psi	18,000 psi
n	10	10
vc	108 psi	90 psi
vc+s	270 psi	225 psi
u	350 psi	300 psi
u (more than 12" fresh conc. under bar)	210 psi	180 psi
u (two-way footing)	280 psi	240 psi

Ec = 417,600 ksf for above conditions
For dead load deflection and temperature & shrinkage calculations, Ec = 174,000 ksf = 1208 ksi (n = 24)
Thermal Coefficient = 0.000,006 } Balanced for temp. increase
Shrinkage " = 0.000,2 }
Max. allowable Soil Pressure = 3 tons/sq. ft.
Equivalent fluid pressure of earth fill = 30 pcf plus live load surcharge of 60 pcf.

LEGEND

DL. = Dead Load
LL. = Live Load
I = Impact
E = Earth Pressure

SECONDARY STATE HIGHWAY NO. 2-A
N. P. RY. OVERCROSSING
KING COUNTY

DESIGN DATA

WASHINGTON STATE HIGHWAY COMMISSION
DEPARTMENT OF HIGHWAYS
OLYMPIA, WASHINGTON

R. A. Mutto, Chairman
R. E. Hensel, Member
E. C. Hentley, Member
H. E. Morgan, Member
Oscar E. Stone, Member

APPROVED: May 4, 1955
DIRECTOR OF HIGHWAYS
APPROVED:
BRIDGE ENGINEER

CONTRACT NUMBER 4978

SHEET 10 OF 10 SHEETS

Designing Engineer	L.M.R.	Mar. 1955			
Designed	S.N.				
Design Checked	L.M.R.				
Drawn By					
Quantities Figured					
Quantities Checked					

2A-387-2

2A-387-2 THIS SHEET FOR B.P.R. and BRIDGE DEPT. ONLY SSH. No. 2A KIRKLAND No. N.P.Ry. Oxing. 134/147

SEC. 28, T26N, R5E, W.M.

FED. ROAD DIV. NO.	STATE	FED. AID PROJ. NO.		SHEET NO.	TOTAL SHEETS
6	WASH.	I-405-3(308)173		124	163

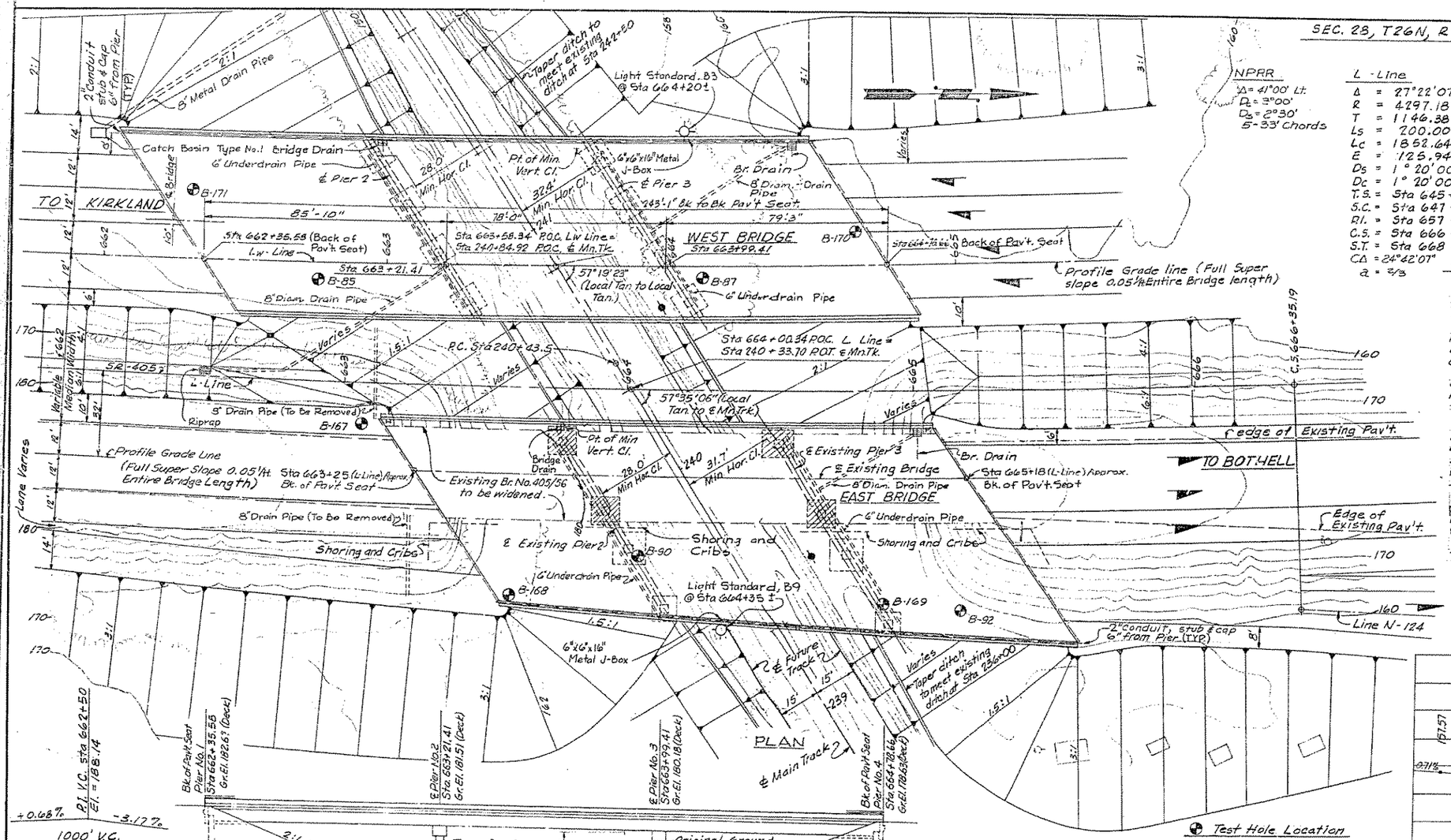

L-Line

Δ	27°22'07" Lt.
R	4297.18'
T	1146.38'
Ls	200.00'
Lc	1852.64'
E	125.94
Ds	1°20'00"
Dc	1°20'00"
T.S.	Sta 645+82.55
S.C.	Sta 647+82.55
P.I.	Sta 657+28.93
C.S.	Sta 666+35.19
S.T.	Sta 668+35.19
CΔ	24°42'07"
a	2/3

Equations

1. Sta 645+82.55, Lw Line, 32' Left P.C. = Sta 645+82.55 L-Line
2. Sta 668+17.28 Bk. Lw Line, 48' left = Sta 668+35.19 Ahd. L Line S.T.

L_W Line

Δ	1°20'00" Lt.	Δ	26°02'07" Lt.
R	8562.26	R	4117.88'
T	99.63'	T	952.02'
L	199.25'	L	1871.17'
E	0.58'	E	108.63'
D	0°40'09"	D	1°23'29"
P.C.	Sta 645+82.55	P.C.C.	Sta 647+81.80
P.I.	Sta 646+82.18	P.I.	Sta 657+33.82
P.C.C.	Sta 647+81.80	P.T.	Sta 666+52.97

GENERAL NOTES

All material and work shall be in accordance with the requirements of The State of Washington, Department of Highways, Standard Specifications for Road and Bridge Construction, dated 1963 and Amendment No. 2, dated June 1968.

Footing elevations are subject to change depending upon foundation material encountered. Reinforcing steel for the footings, columns and walls shall not be cut until final footing elevations have been determined in the field.

The concrete in the footings & walls shall be Class B mix. All other concrete shall be Class AX mix except the concrete in the Prestressed Girders which shall conform to the requirements in the Special Provisions.

Falsework for the East Bridge shall be released in all spans in the sequence shown in the plans after the required length of time and sufficient strength has been attained in accordance with the Standard Specifications and Special Provisions. The falsework shall be carefully released to prevent undue stresses or impact in the structure. The railbase and curb shall be placed after the release of the falsework.

The Roadway slab for the West Bridge shall be placed in one continuous pour each side of the longitudinal construction joint after the falsework for piers 2 and 3 has been removed.

The maximum design soil pressure per square foot is as follows:

West Bridge		East Bridge	
Pier 1	3 Tons	Pier 1	2 Tons
Pier 2	4 Tons	Pier 2	4 Tons
Pier 3	4 Tons	Pier 3	4 Tons
Pier 4	3 Tons	Pier 4	4 Tons

LOADING: HS 20-OR TWO 24k AXLES AT 4' CTRS

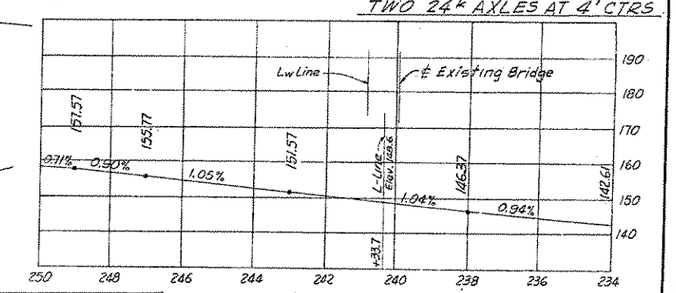

PROFILE ℄ MAIN TRACK
Northern Pacific Railway

APPROXIMATE QUANTITIES

	W. Bridge	E. Bridge	Units
Structure Excavation	1150	580	Cu. yds.
Shoring and Cribs or Extra Excavation		Lump Sum	L.S.
Steel Reinforcing Bars	73,300	44,200	Lbs.
Concrete, Class B	495	87	Cu. yds.
Concrete, Class AX	174	167	Cu. yds.
Superstructure, West Bridge NPRY Overcrossing	Lump Sum	—	Lump Sum
Superstructure, East Bridge NPRY Overcrossing	—	Lump Sum	Lump Sum
Water Reducing Additive	310	280	Dollars
Removing Portions of Existing Bridge No. 405/56	—	Lump Sum	Lump Sum
Furnishing Steel Piles	—	60	Linear feet
Driving Steel Piles	—	2	Only
Downspouts	35	20	Linear Feet

NOTE: Each pile shall be driven to a depth sufficient to develop a minimum load bearing capacity of Thirty (30) Tons at Piers No. 1 and 4.

SR 405
MP 18.87 TO MP 21.83
NE 100TH STREET TO NE 145TH STREET
KING COUNTY
N.P. RY. OVERCROSSING

LAYOUT

WASHINGTON STATE HIGHWAY COMMISSION
DEPARTMENT OF HIGHWAYS
OLYMPIA, WASHINGTON
GEORGE D. ZANDI, CHAIRMAN
R.L. NIVALSON — SALES FERGUSON
R. WALSH — JOHN H. KOPF

APPROVED February 27, 1969

CONTRACT NO. 8615 — SHEET 130 OF 169 SHEETS

DATE	REVISION	BY	APP'D.
12-2-68	Position & Lat. Clr. to Pier for E. Bridge	J.L.M.	[illegible]
4-17-69	Shoring & Cribs Pay Item	G.A.R.	[illegible]
	Removal Pay Item & Added Exist. Br. No.		
2-3-69		G.A.R.	[illegible]
12-12-68	Steel Reinf. Bar Quant.	G.A.R.	[illegible]

CITY OF SEATTLE

V-1-G-T-A

SR 405-1509-1

As Built Changes in Red 10-1-71

SR-405/51

1/1/90

FED. ROAD DIV. NO.	STATE	FED. AID PROJ. NO.	SHEET NO.	TOTAL SHEETS
8	WASH.	I-405-3(509)173	125	163

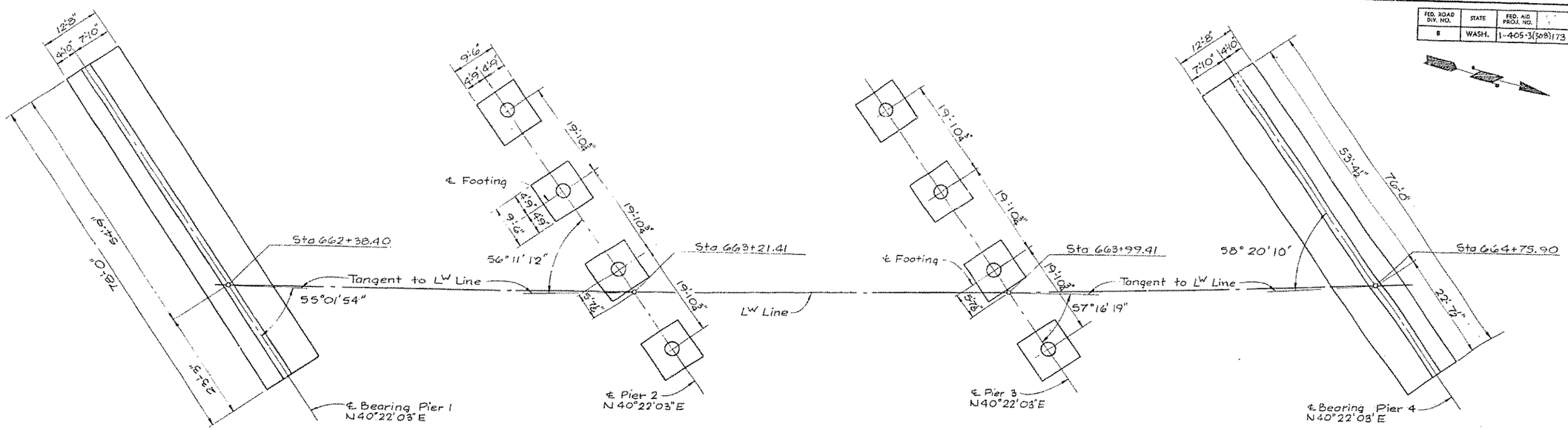

FOOTING PLAN - WEST BRIDGE

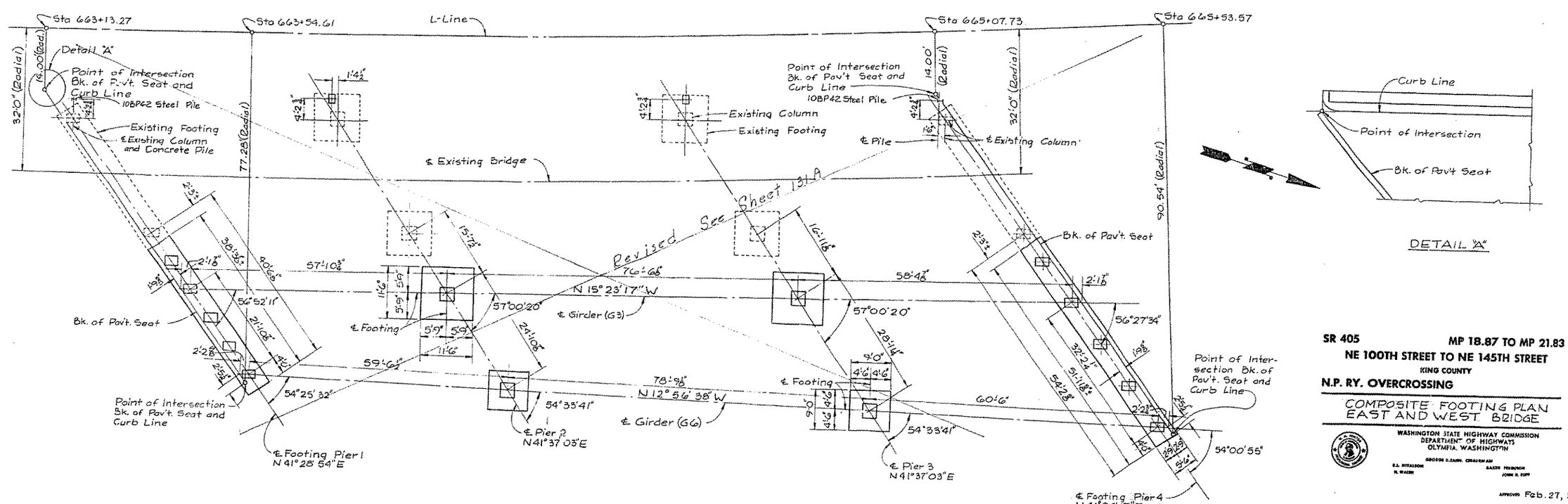

FOOTING PLAN - EAST BRIDGE *Revised*

SR 405 **MP 18.87 TO MP 21.83**

NE 100TH STREET TO NE 145TH STREET

KING COUNTY

N.P. RY. OVERCROSSING

COMPOSITE FOOTING PLAN
EAST AND WEST BRIDGE

WASHINGTON STATE HIGHWAY COMMISSION
DEPARTMENT OF HIGHWAYS
OLYMPIA, WASHINGTON

GEORGE D. ZAMPI, CHAIRMAN

R.L. NICKELSON — DAVID MORRISON
N. WALSH — JOHN H. POPP

APPROVED Feb. 27, 1969

CONTRACT NO. 8615 SHEET 131 OF 169 SHEETS

SR 405 - 1509 - 2

V-1-S-T-A

As Built Changes in Red 10-1-71

SR-405/61

19/39

FED. ROAD DIV. NO.	STATE	FED. AID PROJ. NO.	SHEET NO.	TOTAL SHEETS
8	WASH.	I-405-3(308)173	125 A	163

Engineer of Bridge Design	[illegible]	Dec. 1969
Supervising Bridge Engr.	[illegible]	"
Designed	J. L. M.	Nov. 1969
Design Checked	J. R. S.	Nov. 1969
Drawn by	J. L. M.	Nov. 1969
Quantities Figured		
Quantities Checked		

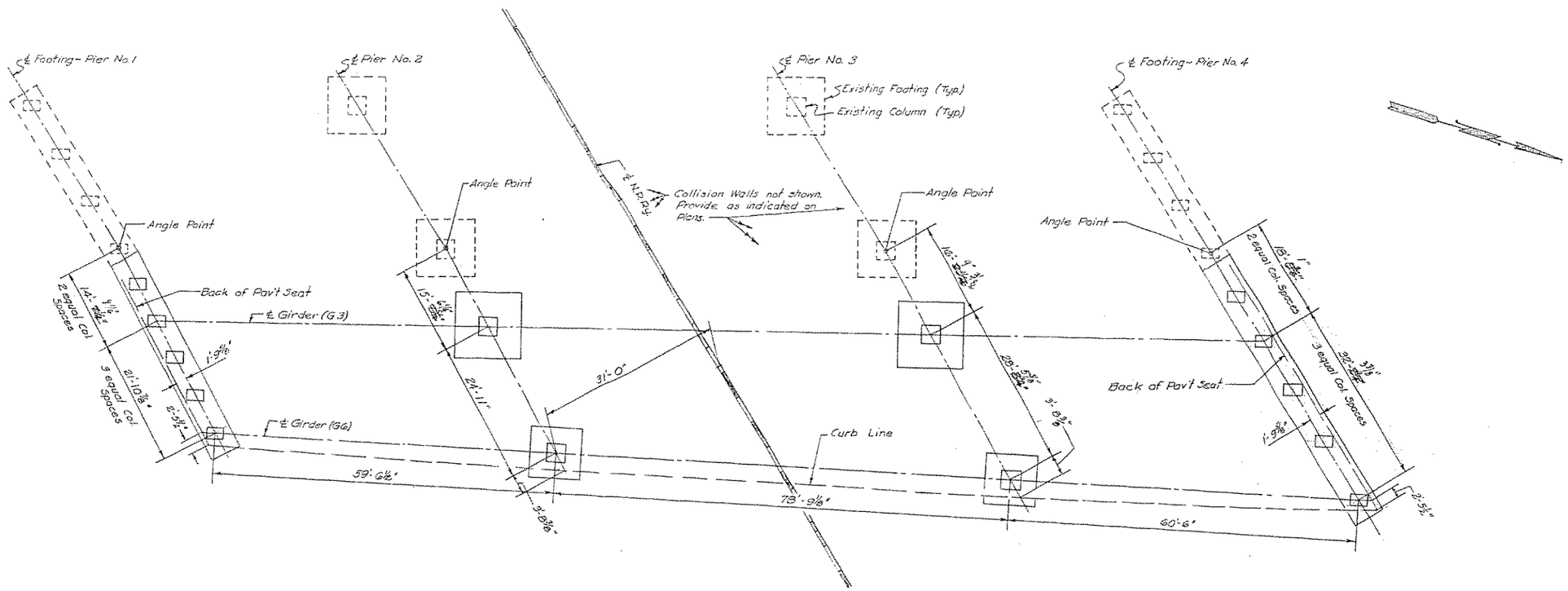

REVISED FOOTING PLAN ~ EAST BRIDGE ~ WIDENING ON EAST SIDE

NOTE: This sheet supersedes like details shown on Sheet 131 of the Contract Plans and such other sheets as indicated in the General Notes on this sheet.

GENERAL NOTES

1. Widening on West Side of the Existing Structure not shown. Widening on West Side remains as shown on the Plans. however shoulder width varies from 6'-0" @ So. end to 9'-0" @ No. end.
2. All girder lengths except for Girder (G6) will be different from those shown on the Plans.
3. All angles between Girders and Piers or Intermediate Diaphragms will be different from those shown on the Plans.
4. All Intermediate Diaphragms shall be placed at 1/3 and 2/3 points of each Span on Girder (G4). They shall be set so that they intersect the Existing Exterior Girder at points opposite the Existing Intermediate Diaphragms in Spans 1 & 2 only. Span 3 intersects 1/3 & 2/3 points @ G6 also.
5. Girder Spacing at End Piers is coincident with Column Spacing.
6. Girders at Intermediate Piers shall be set at equal spaces between Columns.
7. Length along the East Curb will differ slightly from that shown on the Plans. The Engineer shall make all necessary adjustments for Curb Joint, Rail Base Joint and Rail Post Spacing.
8. Slight dimensional differences from those shown on Plan Sheets 138 to 145 inclusive will be caused by dimension changes shown on this sheet. Such differences will have to be taken care of by field adjustment. It is not anticipated that any Bar List changes will be required.

SR 405 MP 18.87 TO MP 21.83
NE 100TH STREET TO NE 145TH STREET
KING COUNTY

N.P. RY. OVERCROSSING

REVISED FOOTING PLAN
EAST BRIDGE

WASHINGTON STATE HIGHWAY COMMISSION
DEPARTMENT OF HIGHWAYS
OLYMPIA, WASHINGTON

[signature]
BRIDGE ENGINEER

APPROVED DECEMBER 2, 1969

SUPPLEMENTAL SHEET 131A OF 169 SHEETS
CONTRACT NO. 8615

As Built Changes in Red 10-1-71

SR 405-1509-2A

19/39-A

FED. ROAD DIV. NO.	STATE	FED. AID PROJ. NO.	SHEET NO.	TOTAL SHEETS
8	WASH.	I-405-3(309)173	126	163

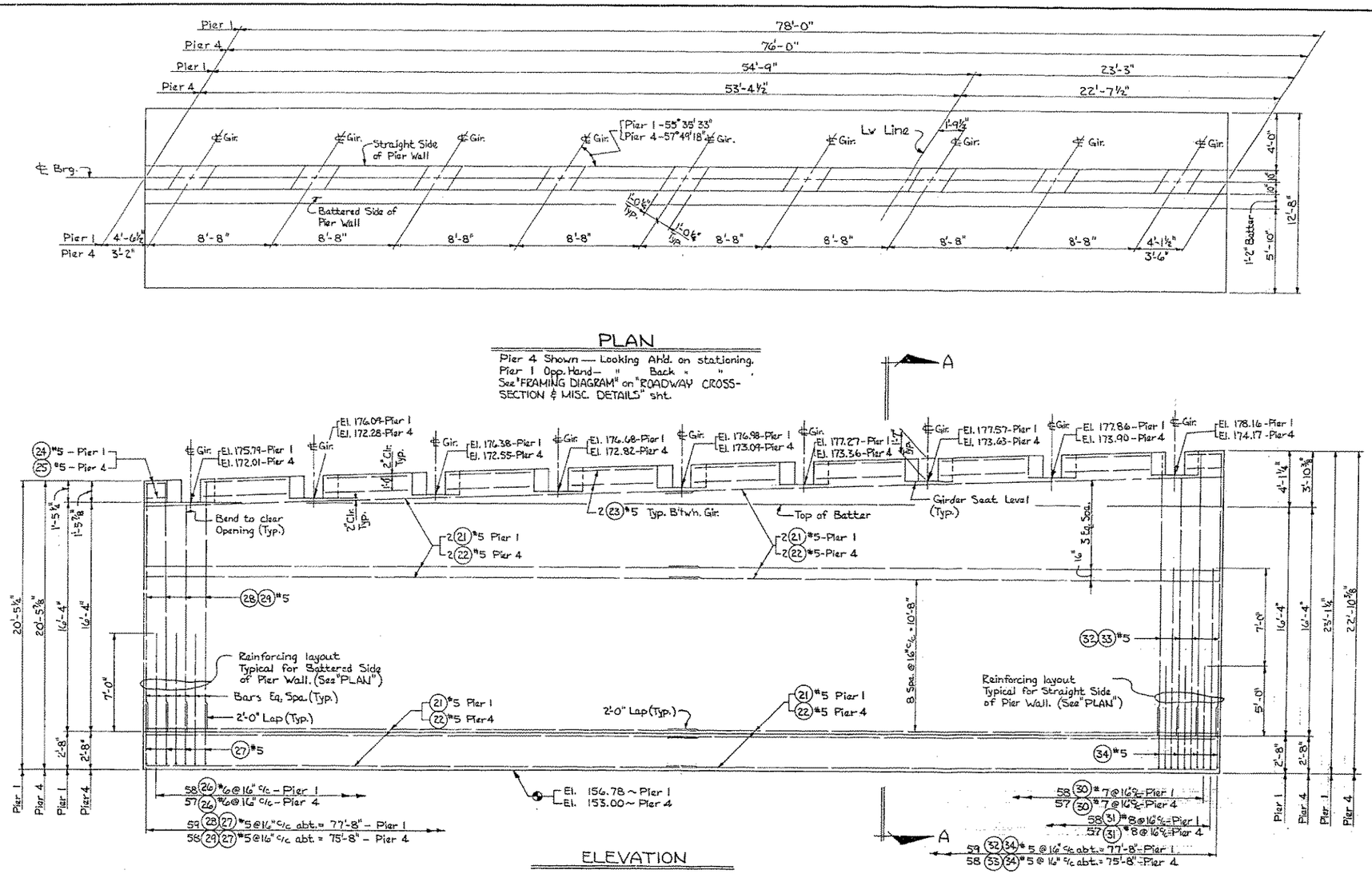

PLAN

Pier 4 Shown — Looking Ahd. on stationing.
Pier 1 Opp. Hand — " Back " "
See "FRAMING DIAGRAM" on "ROADWAY CROSS-SECTION & MISC. DETAILS" sht.

ELEVATION

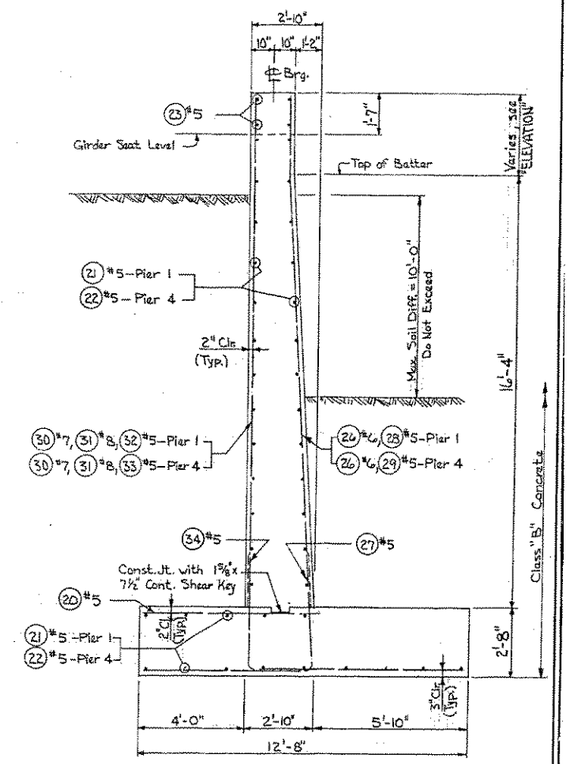

SECTION A-A

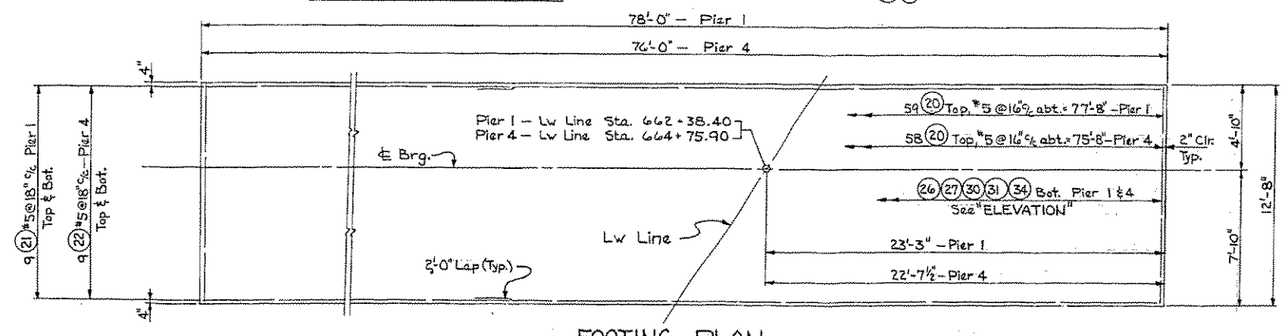

FOOTING PLAN

Pier 4 Shown — Looking Ahd. on stationing.
Pier 1 Opp. Hand — " Back " "

SR 405 **MP 18.87 TO MP 21.83**

NE 100TH STREET TO NE 145TH STREET

KING COUNTY

N.P. RY. OVERCROSSING

PIERS NO. 1 & 4
WEST BRIDGE

WASHINGTON STATE HIGHWAY COMMISSION
DEPARTMENT OF HIGHWAYS
OLYMPIA, WASHINGTON

GORDON D. DANIEL, CHAIRMAN

E.L. ANDERSON
R. WALSH
BAKER FERGUSON
JOHN H. STUPP

APPROVED Feb. 27, 1969

CONTRACT NO. 8615

SHEET 132 OF 169 SHEETS

DESIGNING ENGINEER	
DESIGNED	
DES. CH. CHECKED	
QUANTITIES FIGURED	
QUANTITIES CHECKED	

BY	DATE
S.O.B.	1/Apr 1968
J.A.T.	1/Oct 1968

DRAWN	
TRACED	
CHECKED	
DESIGN ENGR.	
LOC. ENGR.	
DIST. ENGR.	

CONSULTING ENGINEERS
CONSULTING ENGINEERS
203 DEXTER HORTON BLDG. 2nd AVE.
SEATTLE, WASHINGTON 98104
(206) 623-5333

SR 405-1509-3

V-I-S-T-A

SR-405/51

19/38

FED. ROAD DIV. NO.	STATE	FED. AID PROJ. NO.		SHEET NO.	TOTAL SHEETS
8	WASH.	I-405-3(398)173		127	163

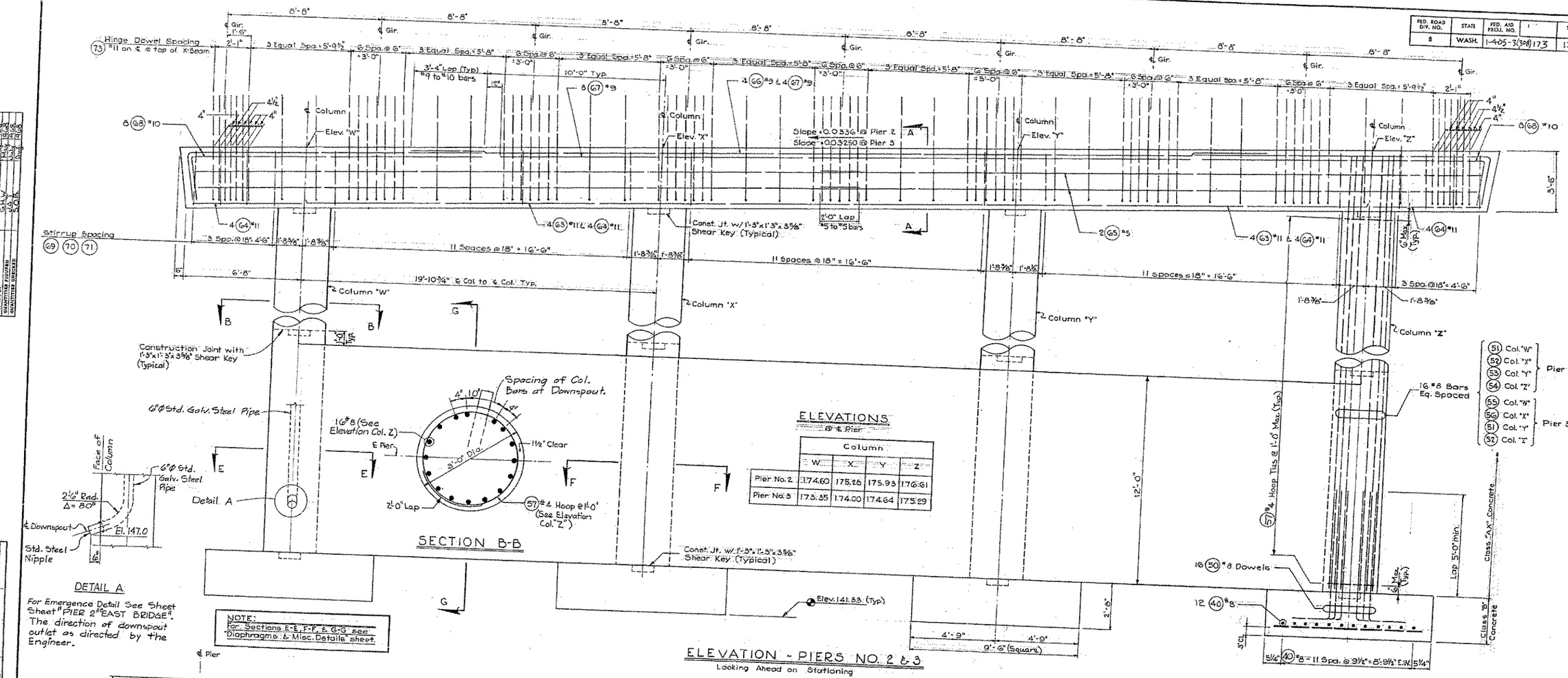

ELEVATION - PIERS NO. 2 & 3

Looking Ahead on Stationing

ELEVATIONS

@ ℄ Pier

	Column			
	W	X	Y	Z
Pier No. 2	174.60	175.26	175.93	176.61
Pier No. 3	173.35	174.00	174.64	175.29

SECTION B-B

DETAIL A

For Emergence Detail See Sheet Sheet "PIER 2" EAST BRIDGE". The direction of downspout outlet as directed by the Engineer.

NOTE:
For Sections E-E, F-F, & G-G see Diaphragms & Misc. Details sheet

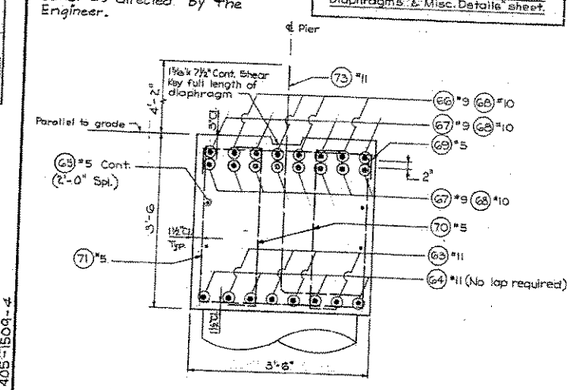

SECTION A-A

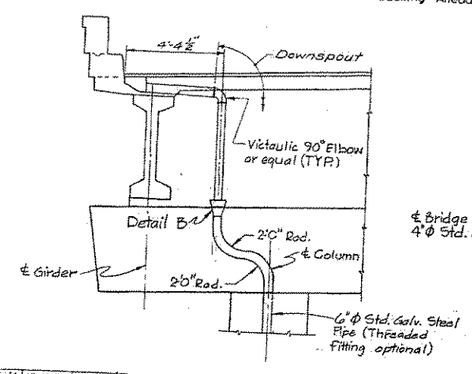

SECTION D-D

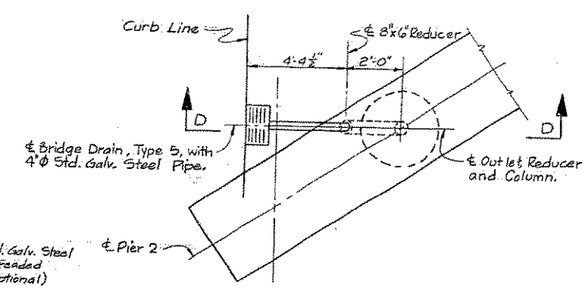

PLAN-DRAIN DETAIL

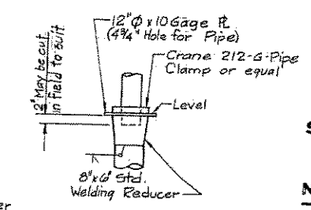

DETAIL B

SR 405 **MP 18.87 TO MP 21.83**

NE 100TH STREET TO NE 145TH STREET

KING COUNTY

N.P. RY. OVERCROSSING

PIERS NO. 2 & 3
WEST BRIDGE

WASHINGTON STATE HIGHWAY COMMISSION
DEPARTMENT OF HIGHWAYS
OLYMPIA, WASHINGTON

GEORGE D. ZAMEL, CHAIRMAN
L.L. MILLIKIN
R. WARD
SAERE PEDERSEN
JOHN H. REY

APPROVED Feb. 27, 1968

CONTRACT NO. 8605

SHEET 133 OF 169 SHEETS

DATE	REVISION	BY	APP'D.
12-12-68	Col. & Dwl. Bar Sizes ~ Drain Detail	G.A.R.	

SR 405-1509-4

V-1-S-T-A

SR-405/61

19/67

FED. ROAD DIV. NO.	STATE	FED. AID PROJ. NO.		SHEET NO.	TOTAL SHEETS
0	WASH.	I-405-3(340)173		128	163

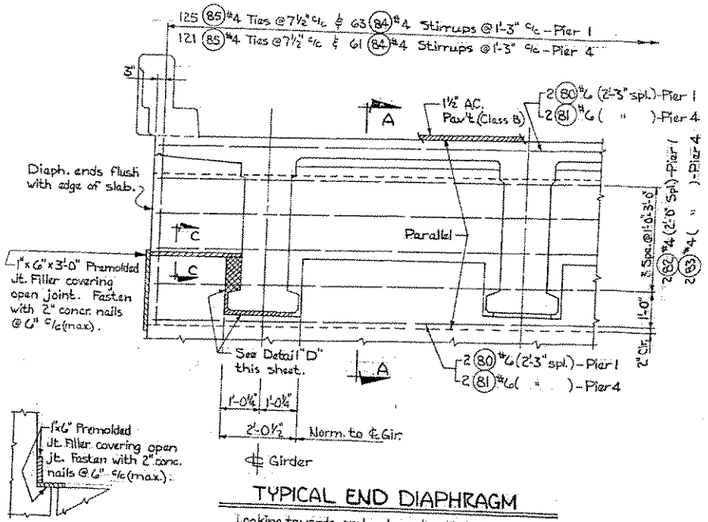

TYPICAL END DIAPHRAGM

Looking towards embankment ~ Normal to skew.

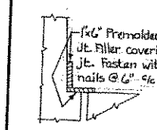

SECTION C-C

Outside of Exterior Girders only.

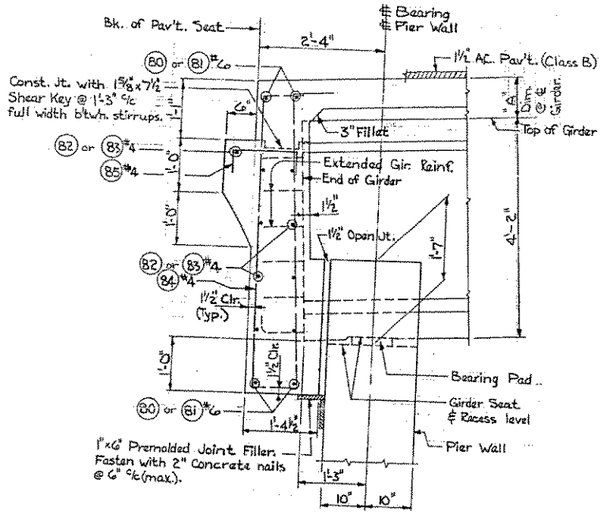

SECTION A-A

All longit. dim. are normal to skew.

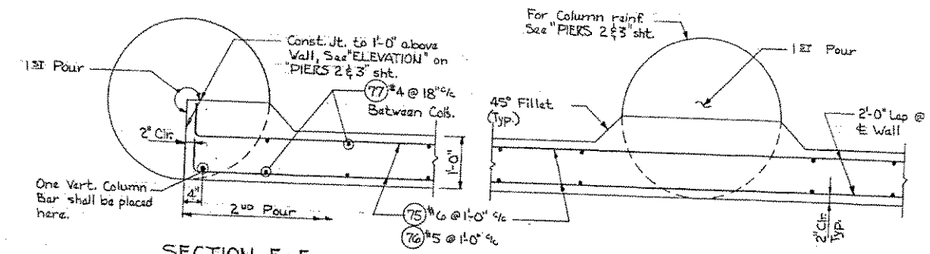

SECTION E-E

SECTION F-F

COLLISION WALL DETAILS

All Sections cut on "PIERS 2 & 3" sht.

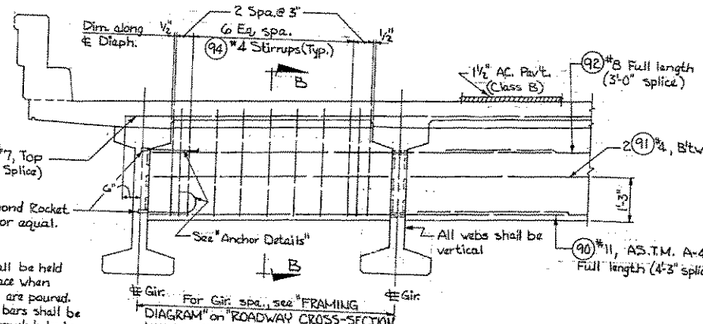

Note: Girders shall be held rigidly in place when diaphragms are poured. Reinforcing bars shall be threaded through holes in girders prior to placing of exterior girders.

TYPICAL INTERMEDIATE DIAPHRAGM

Shown normal to skew.

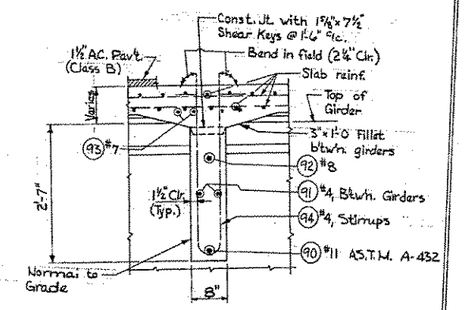

SECTION B-B

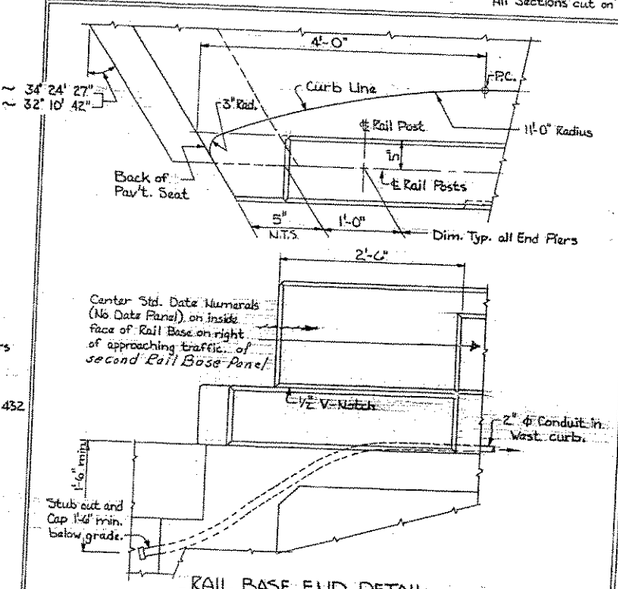

RAIL BASE END DETAIL

All Vertical Lines Plumb

Pier 1 ~ 34° 24' 27"
Pier 4 ~ 32° 10' 42"

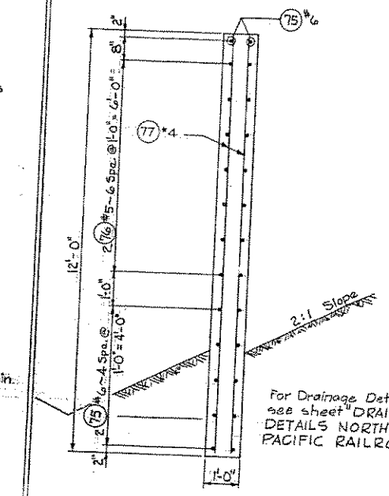

SECTION G-G

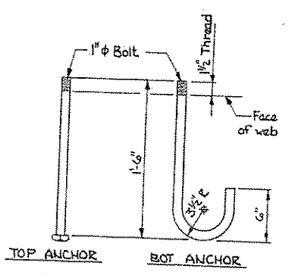

ANCHOR DETAILS

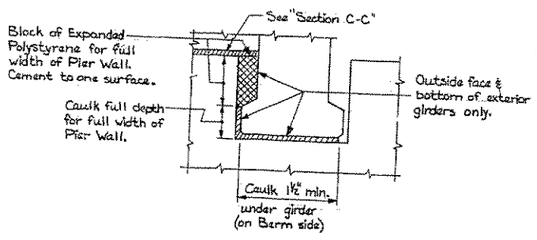

DETAIL "D"

Caulking material shall be synthetic closed cell sponge rubber cemented to one surface.

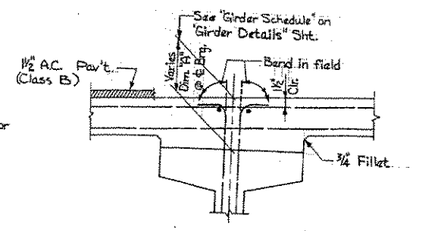

TYPICAL SECTION THRU GIRDER SHOWING METHOD OF ADJUSTING RDWY. ELEVS. FOR VERT. CURVES, CAMBER OR SUPERELEVATION.

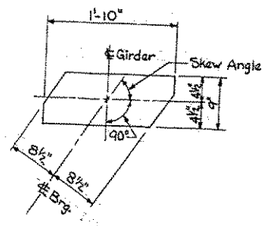

BEARING PAD

Laminated Elastomeric Br'g. Pad, 1½" Thick ~ 2 Shims. Durometer Hardness = 60.

SR 405 **MP 18.87 TO MP 21.83**

NE 100TH STREET TO NE 145TH STREET

KING COUNTY

N.P. RY. OVERCROSSING

DIAPHRAGMS & MISC. DETAILS
WEST BRIDGE

WASHINGTON STATE HIGHWAY COMMISSION
DEPARTMENT OF HIGHWAYS
OLYMPIA, WASHINGTON

R.L. BUCALSON
E. WALSH
GEORGE D. ZANIK, CHAIRMAN
SAM E. PENDLETON
JOHN H. STIPP

APPROVED Feb. 27, 1969

CONTRACT NO. 8615 SHEET 134 OF 169 SHEETS

As Built Changes in Red 10-4-71
SR-405/51

SR 405-1504-5

V-1-S-T-A

19/36

FED. ROAD DIV. NO.	STATE	FED. AID PROJ. NO.		SHEET NO.	TOTAL SHEETS
8	WASH.	I-405-3(308)173		129	163

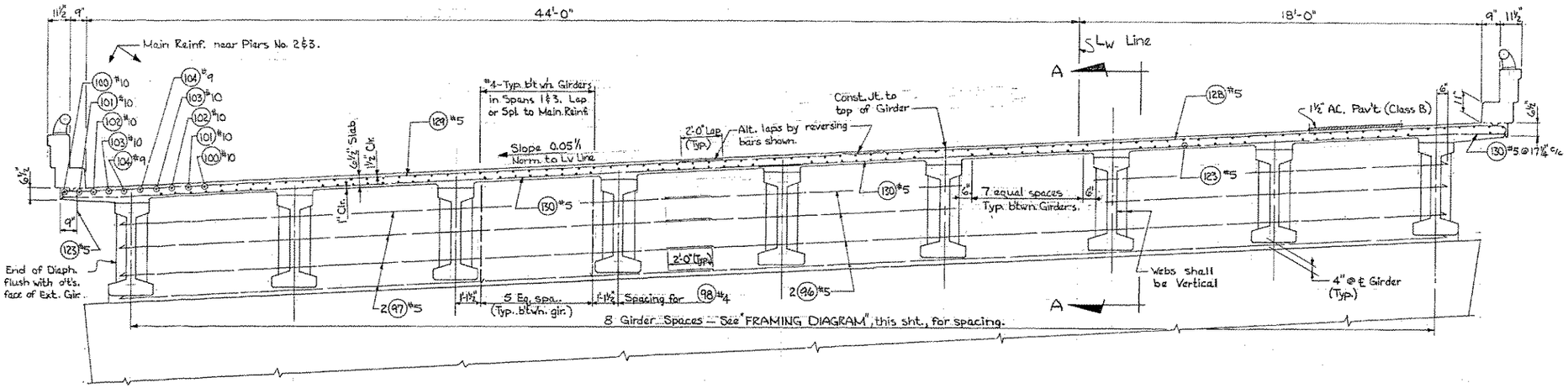

ROADWAY CROSS-SECTION

Shown normal to Lw Line @ Intermediate Pier
Looking Ahead on Stationing
Dim. are normal to Lw Line

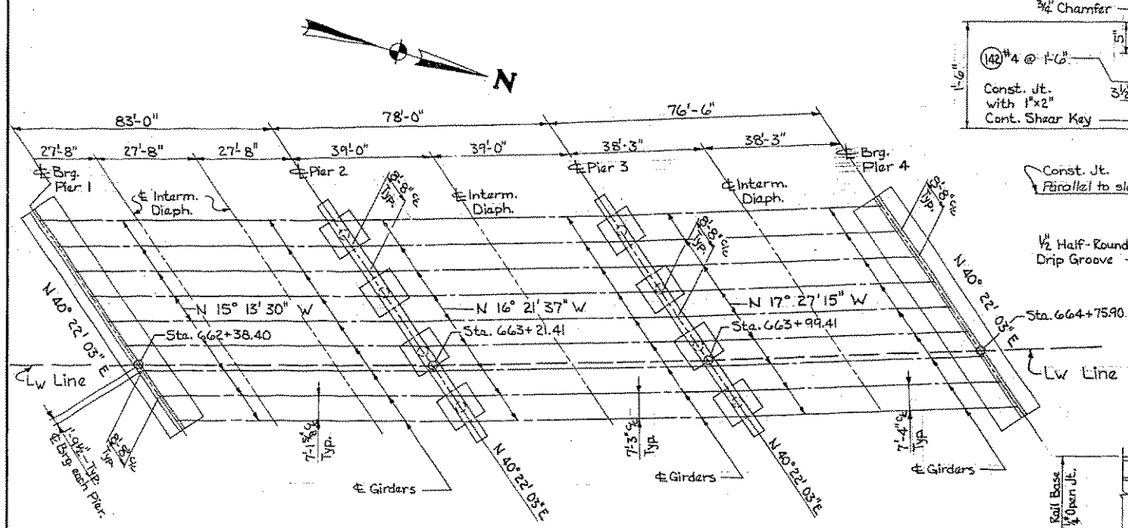

FRAMING DIAGRAM

All dimensions measured on the horizontal.

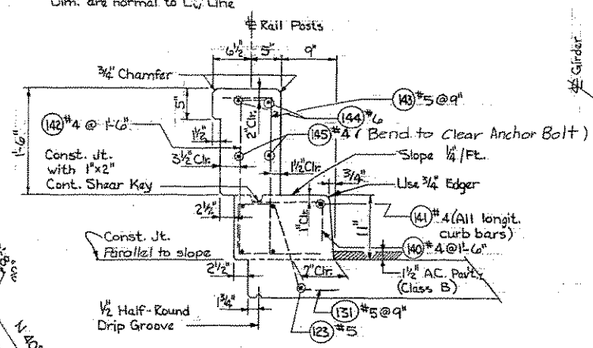

CURB DETAIL

All Chamfers ½" unless noted.

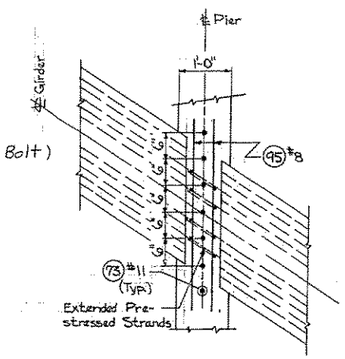

SECTION B-B

Diaph. Steel not shown.
See "Piers No. 2 & 3" Sht. for Ext. Girder Hinge Bar location.

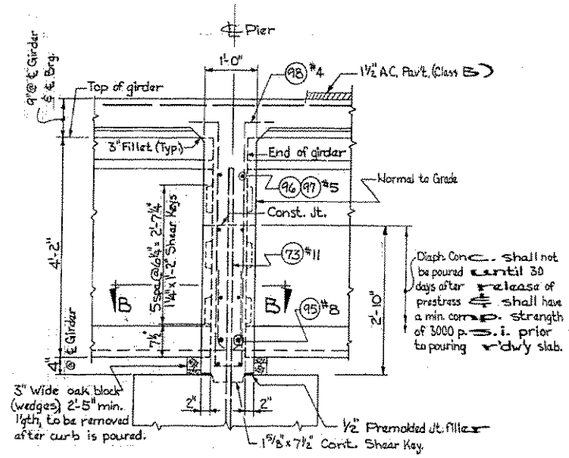

SECTION A-A

Normal to ℄ Pier

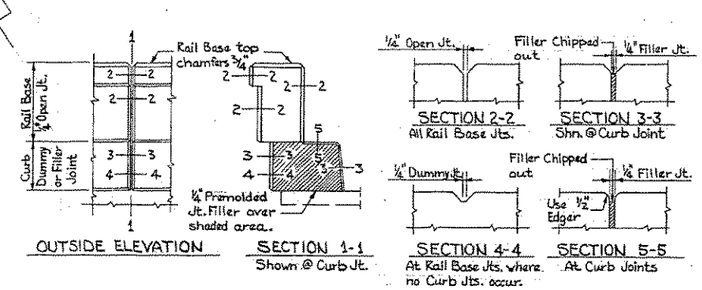

OUTSIDE ELEVATION

SECTION 1-1
Shown @ Curb Jt.

SECTION 2-2
All Rail Base Jts.

SECTION 3-3
Shn. @ Curb Joint

SECTION 4-4
At Rail Base Jts. where no Curb Jts. occur.

SECTION 5-5
At Curb Joints

CURB & RAIL BASE JOINTS

All chamfers ½" except as noted.

DATE	REVISION	BY	APP'D
1-31-69	Slab overhang soffit	RRH	GMW

SR 405 MP 18.87 TO MP 21.83
NE 100TH STREET TO NE 145TH STREET
KING COUNTY
N.P. RY. OVERCROSSING

ROADWAY CROSS-SECTION & MISC. DETAILS — WEST BRIDGE

WASHINGTON STATE HIGHWAY COMMISSION
DEPARTMENT OF HIGHWAYS
OLYMPIA, WASHINGTON

APPROVED Feb. 27, 1969

CONTRACT NO. 8615 SHEET 135 OF 169 SHEETS

SR 405-1509-G1

V-1-S-T-A

SR-405/51

FED. ROAD DIV. NO.	STATE	FED. AID PROJ. NO.	SHEET NO.	TOTAL SHEETS
8	WASH.	I-405-3(308)173	130	163

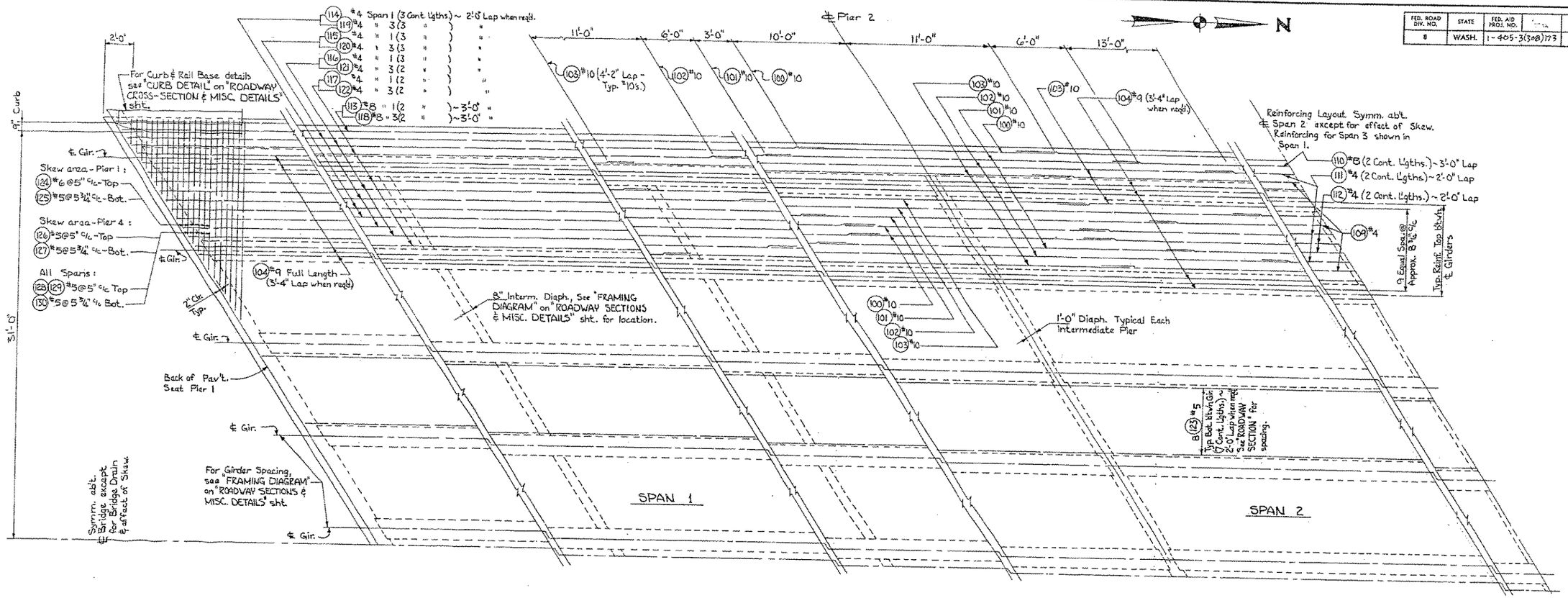

PART PLAN ~ ROADWAY SLAB

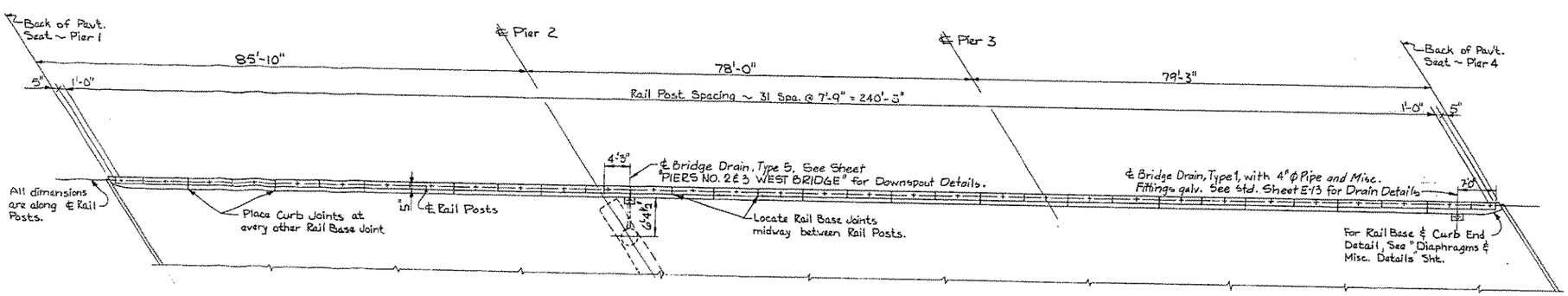

RAIL BASE JOINT, CURB JOINT, & RAIL POST SPACING

Use Bridge Railing Type-R ~ See Std. Sht. E-31
West Curb shown, East Curb similar.

DESIGNING ENGINEER	J.A.K.	Apr. 1968
DRAWN	J.A.K.	Apr. 1968
DESIGN CHECKED	J.A.K.	May 1968
DRAWN BY	S.O.B.	May 1968
QUANTITIES PREPARED	J.A.K.	July 1968
QUANTITIES CHECKED	J.A.K.	Aug. 1968

	BY	DATE
DESIGN	S.O.B.	May 1968
TRACED		
CHECKED	J.A.T.	January 1969
COST ESTIM.		
SUPR. ENGR.		

SR 405 - 1509 - 7

V-I-S-T-A

KOEL - HOBI - STEVENS - THOMAS, & ASSOCIATES
CONSULTING ENGINEERS & ARCHITECTS
206 PIONEER BLDG. - 705 SECOND AVE.
SEATTLE, WASHINGTON 98104
(206) 622-8202

SR 405 **MP 18.87 TO MP 21.83**

NE 100TH STREET TO NE 145TH STREET

KING COUNTY

N.P. RY. OVERCROSSING

ROADWAY PLAN
WEST BRIDGE

WASHINGTON STATE HIGHWAY COMMISSION
DEPARTMENT OF HIGHWAYS
OLYMPIA, WASHINGTON

GEORGE D. ZANK, CHAIRMAN
R.L. HERALSON — SARGE FERGUSON
H. WALSH — JOHN H. RUPP

APPROVED Feb. 27, 1969

CONTRACT NO. 8G15 — SHEET 136 OF 169 SHEETS

SR-405 / 51

DISTRICT-FORT ORD OFFICE 19/34

FED. ROAD DIV. NO.	STATE	FED. AID PROJ. NO.		SHEET NO.	TOTAL SHEETS
8	WASH.	I-405-3(308)173		131	163

NOTE: ALL DETAILS ON THIS SHEET ARE FOR PRETENSIONED STRAND DESIGN ONLY.

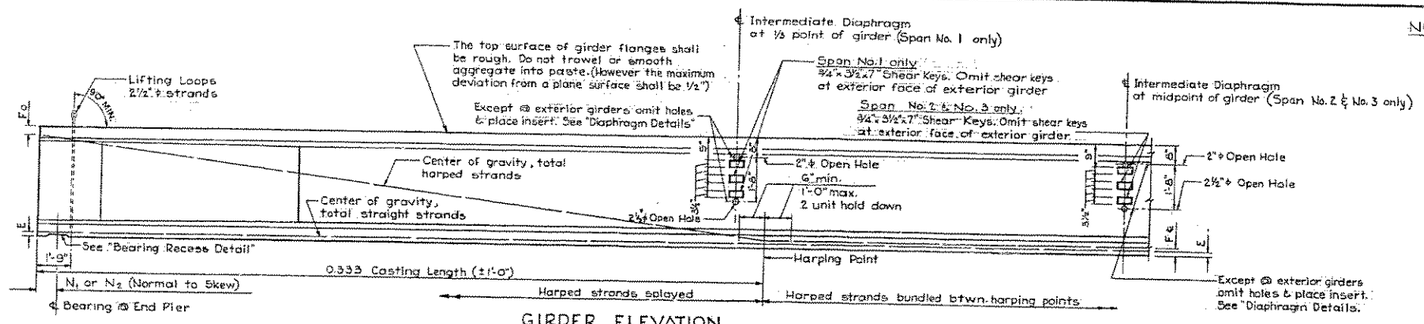

GIRDER ELEVATION

If the lifting loops extend thru the roadway slab they shall be cut off prior to pouring of roadway slab. All lifting strands are of same material and stength as prestressing strands. Wrap lifting loops so that each strand will carry its share of the total load. Extend lifting loops to within 3" clear of the bottom of the girder.

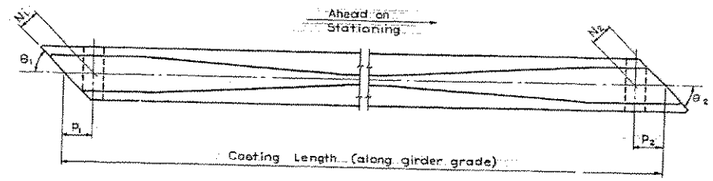

GIRDER SCHEDULE

All strands shall be ¼" ϕ 270K

"A" Dimension @ ℄ Bearings = 9"

SPAN	GIRDER	DIMENSIONS θ1	θ2	N1	N2	P1	P2	Y	Casting Length	Maximum Stirrup Spacing S	BUNDLED HARPED & STRAIGHT PRE-TENSIONED: HARPED No. of Strands	HARPED Jacking Force (kips)	STRAIGHT No. of Strands	STRAIGHT Jacking Force (kips)	Total Number of Strands	Location of C.G. Steel Area (In.) E	F℄	Fo	Camber C (In.)
1	All Girders	56°	56°	1'-3"	—	1'-6⅛"	—	9"	84'-1½"	1'-1"	8	231	20	578	28	2 5/16"	3"	4 5/8"	1 5/8"
2	" "	57°	57°	—	—	—	—	9"	77'-2½"	1'-2"	7	202	18	520	25	2½"	3"	4¼"	1¼"
3	" "	58°	58°	—	1'-3"	—	1'-5¾"	9"	77'-7"	1'-2"	8	231	16	462	24	2 3/8"	3"	4 5/8"	1⅛"

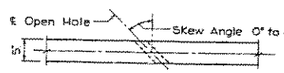

SECTION THRU WEB AT INT. DIAPHRAGMS

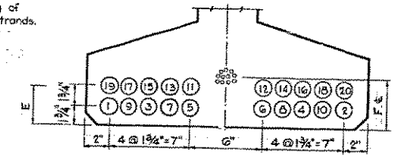

STRAND PATTERN AT ℄ SPAN

Strand location sequence shall be as shown ①②, etc.

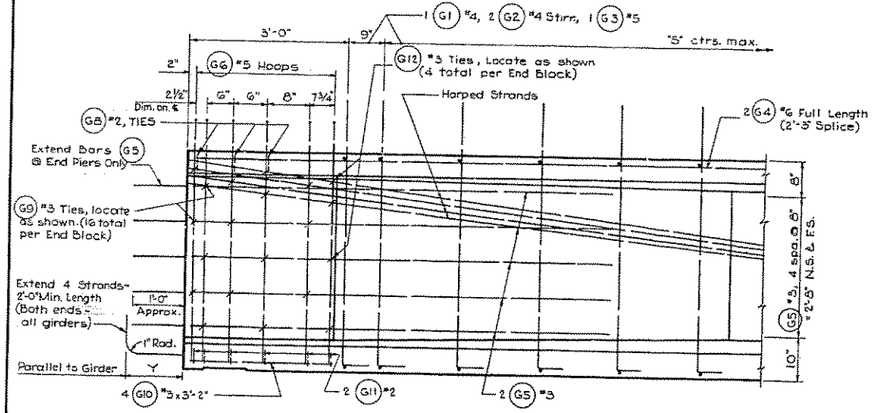

END BLOCK ELEVATION

Cut all strands flush with the girder ends except as indicated for Int. Piers. Paint ends of flush strands with approved epoxy resin @ End Piers.

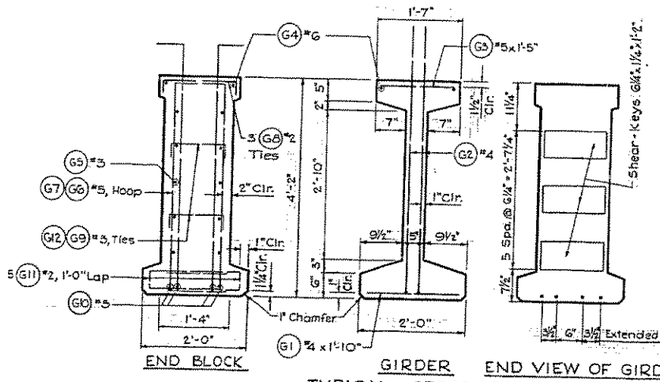

TYPICAL CROSS-SECTIONS

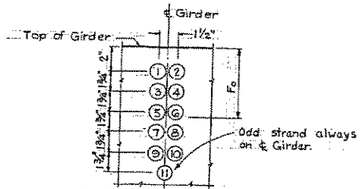

STRAND PATTERN AT GIRDER END

(Harped strands only)
Strand location sequence shall be as shown ①②, etc.

Span	Total Weight One Girder *
1	51,300#
2	47,600#
3	47,800#

*Based on end block weight of 964#/L.F. & girder weight of 530#/L.F.

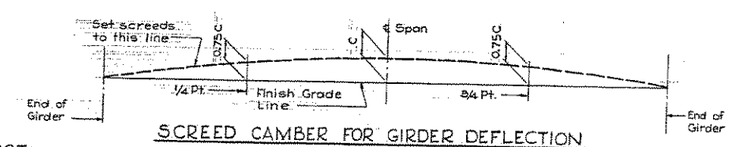

SCREED CAMBER FOR GIRDER DEFLECTION

For camber (C) see "Girder Schedule".

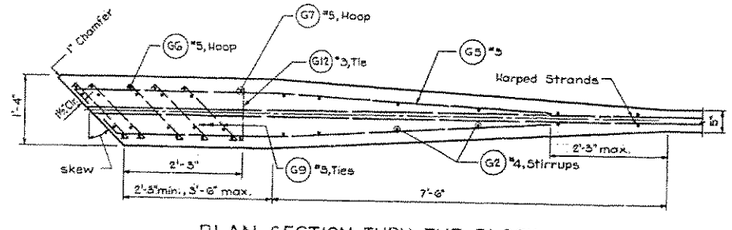

PLAN SECTION THRU END BLOCK

Extended strands not shown

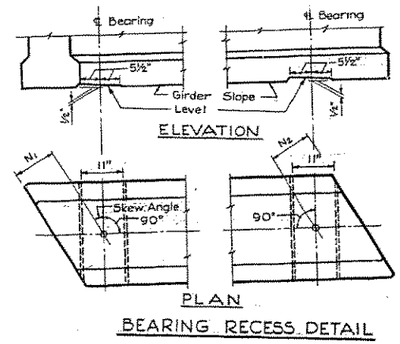

BEARING RECESS DETAIL

ALL girders @ end piers only

Note: Forms for bearing pad recesses shall be constructed and fastened in such a manner so as not to cause damage to the girders during the strand release operation.

BAR LIST

All dimensions are out to out.

MARK	LOCATION	SIZE	
G1	Girder - Bot. Flange	#4	Str.
G2	" Stirrup	#4	
G3	" Top Flange	#5	Str.
G4	" Longit.-Top full length	#6	Str.
G5	End Block - Longit.	#3	
G6	" " - Hoops	#5	
G7	" " - Hoops	#5	
G8	" " - Ties - Top flange	#2	
G9	" " - Ties	#3	
G10	" " - Longit. - Bottom	#3	Str.
G11	" " - Transv. - "	#2	
G12	" " - Tie	#3	

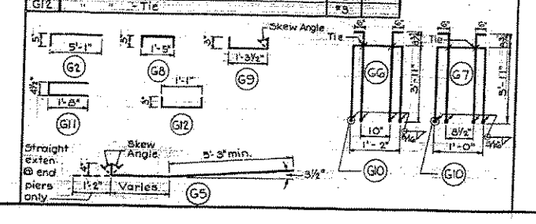

SERIES 80 GIRDER

SR 405 **MP 18.87 TO MP 21.83**

NE 100TH STREET TO NE 145TH STREET

KING COUNTY

N.P. RY. OVERCROSSING

GIRDER DETAILS
WEST BRIDGE

WASHINGTON STATE HIGHWAY COMMISSION
DEPARTMENT OF HIGHWAYS
OLYMPIA, WASHINGTON

GEORGE H. ZANDI, CHAIRMAN
R.L. BRALDSON — SARGE FERGUSON
H. WALSH — JOHN H. RUPP

APPROVED Feb. 27, 1969

CONTRACT NO. 8645 SHEET 137 OF 169 SHEETS

SR 405-1509 - 8

V-I-S-T-A

SR-405/51

19/33

FED. ROAD DIV. NO.	STATE	FED. AID PROJ. NO.		SHEET NO.	TOTAL SHEETS
8	WASH.	I-405-3(308)173		132	163

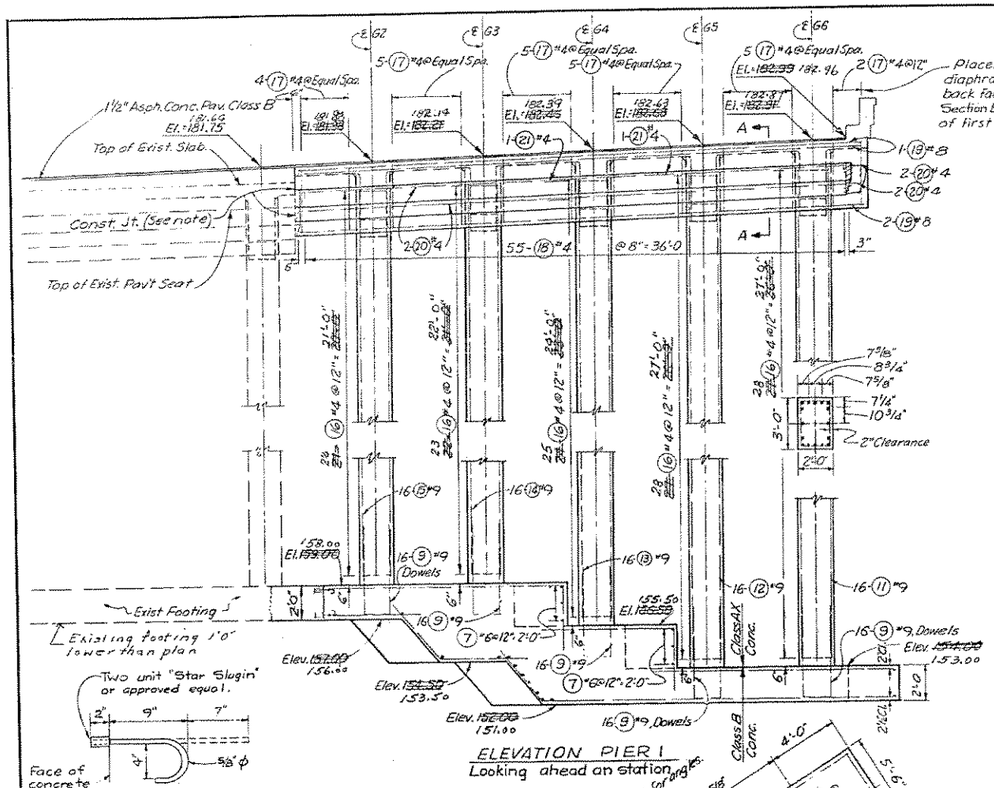

ELEVATION PIER 1
Looking ahead on station

ANCHOR
Note: 209 Reqd for Bridge, to be included in the price for "Superstructure."

G2	57°43'04"
G3	56°52'11"
G4	56°02'18"
G5	55°13'15"
G6	54°25'32"

Changed due to location of existing bridge and revised new construction

FOOTING PLAN

PIER 1

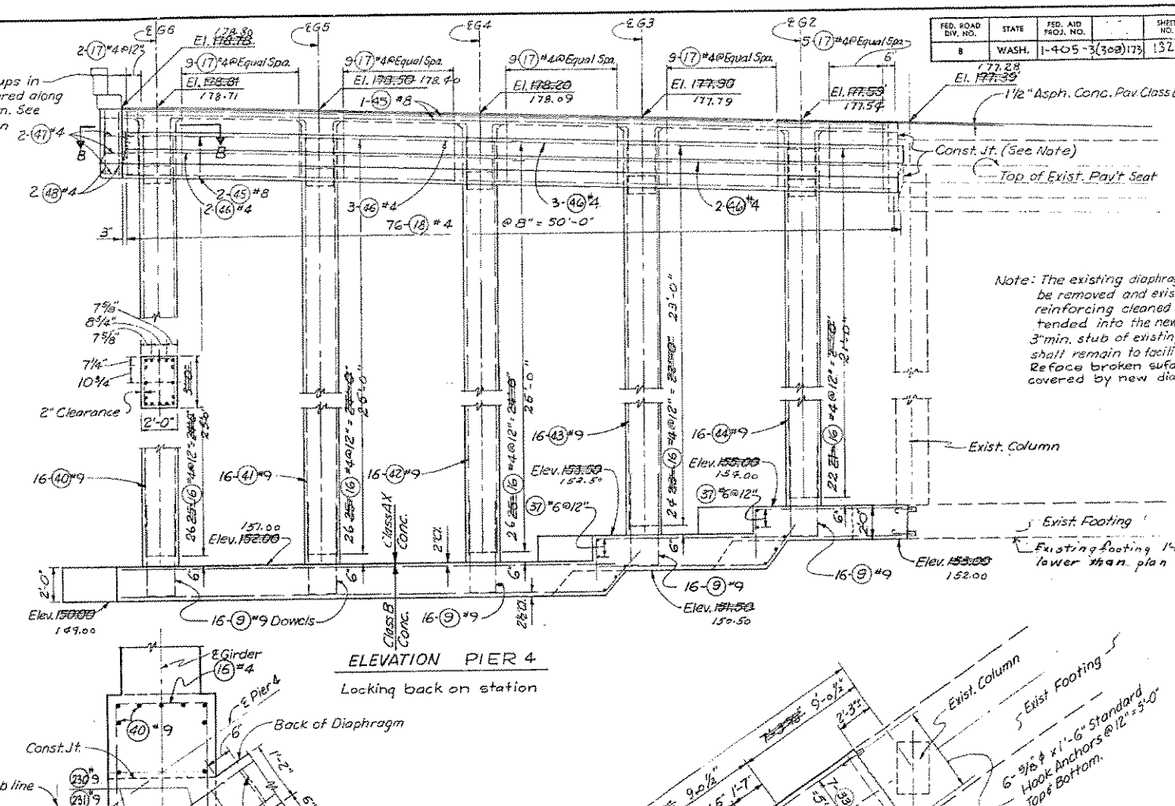

ELEVATION PIER 4
Looking back on station

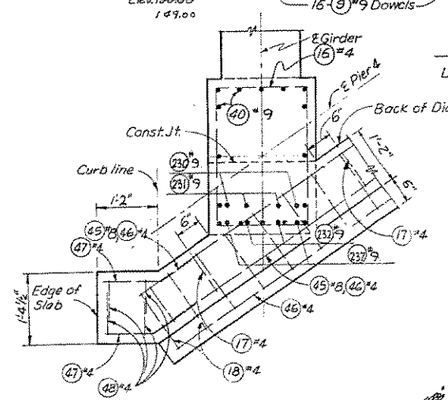

SECTION B-B

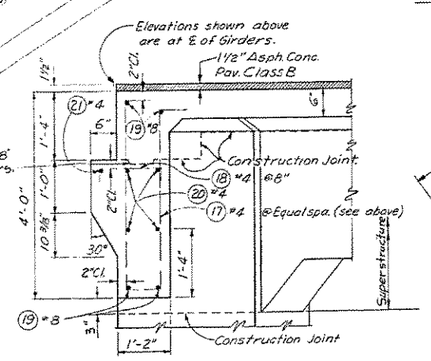

SECTION A-A

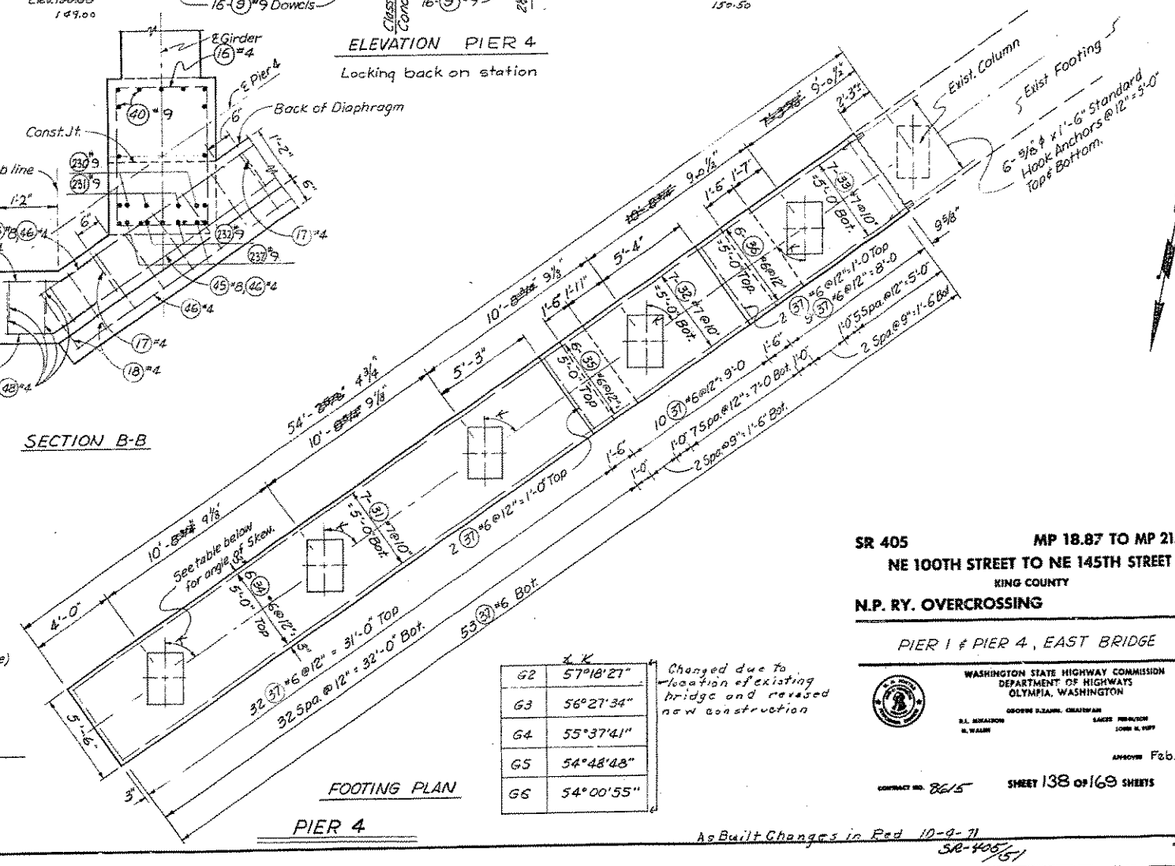

G2	57°18'27"
G3	56°27'34"
G4	55°37'41"
G5	54°48'48"
G6	54°00'55"

Changed due to location of existing bridge and revised new construction

FOOTING PLAN

PIER 4

SR 405 **MP 18.87 TO MP 21.83**
NE 100TH STREET TO NE 145TH STREET
KING COUNTY
N.P. RY. OVERCROSSING

PIER 1 & PIER 4, EAST BRIDGE

WASHINGTON STATE HIGHWAY COMMISSION
DEPARTMENT OF HIGHWAYS
OLYMPIA, WASHINGTON

GEORGE H. ZAMPI, CHAIRMAN
R.L. MORRISON — LACEY V. MURROW
H. WAHRI — JOHN H. POPE

APPROVED Feb. 27, 1969

CONTRACT NO. 8615 — SHEET 138 OF 169 SHEETS

As Built Changes in Red 10-9-71

SR-405/51

SR 405-1509-9

V-I-S-T-A

DESIGNING ENGINEER	R.D.H.	4-23-68
DESIGNED	R.D.H.	2-26-68
DRAWN	J.S.H.	3-30-68
DRAWN & CHECKED	J.S.H.	2-21
QUANTITIES PRICED	W.H.H.	
QUANTITIES CHECKED	R.E.O.	

	BY	DATE
DESIGN	R.C.S.	2-26-68
DRAWN	J.S.H.	2-26-68
CHECKED	R.D.H.	2-1-68
LOC. BRUR.		
SUPERVISOR		

VOIGT-PETERS-STEACHER-THOMPSON & ASSOCIATES
CONSULTING ENGINEERS
302 HOBBS BLDG. - 705 SECOND AVE.
SEATTLE, WASHINGTON 98104
MAIN 3-8330

FED. ROAD DIV. NO.	STATE	FED. AID PROJ. NO.		SHEET NO.	TOTAL SHEETS
8	WASH.	1-405-3(308)173		133	163

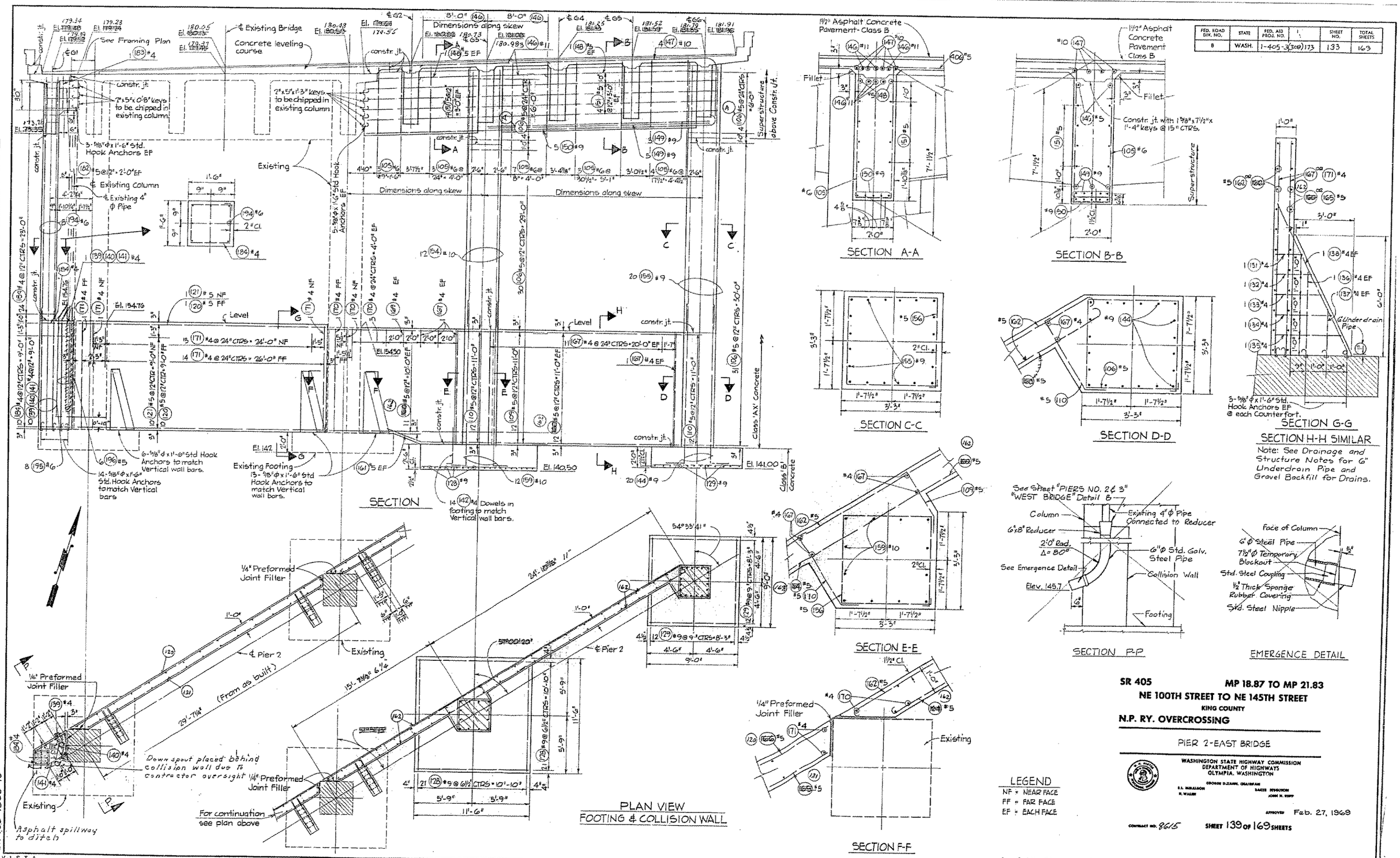

LEGEND
NF = NEAR FACE
FF = FAR FACE
EF = EACH FACE

SR 405 **MP 18.87 TO MP 21.83**

NE 100TH STREET TO NE 145TH STREET

KING COUNTY

N.P. RY. OVERCROSSING

PIER 2-EAST BRIDGE

WASHINGTON STATE HIGHWAY COMMISSION
DEPARTMENT OF HIGHWAYS
OLYMPIA, WASHINGTON

GEORGE D. ZAMM, CHAIRMAN
S.L. MIKALSON
R. WALSH
BAKER JEDGUSON
JOHN H. RUPP

APPROVED Feb. 27, 1969

CONTRACT NO. 8615 SHEET 139 OF 169 SHEETS

SR 405-1509-10

V-1-S-T-A

As Built Changes in Red 10-4-71

SR-405/61

19/3

FED. ROAD DIV. NO.	STATE	FED. AID PROJ. NO.		SHEET NO.	TOTAL SHEETS
8	WASH.	1-405-3(308)173		134	163

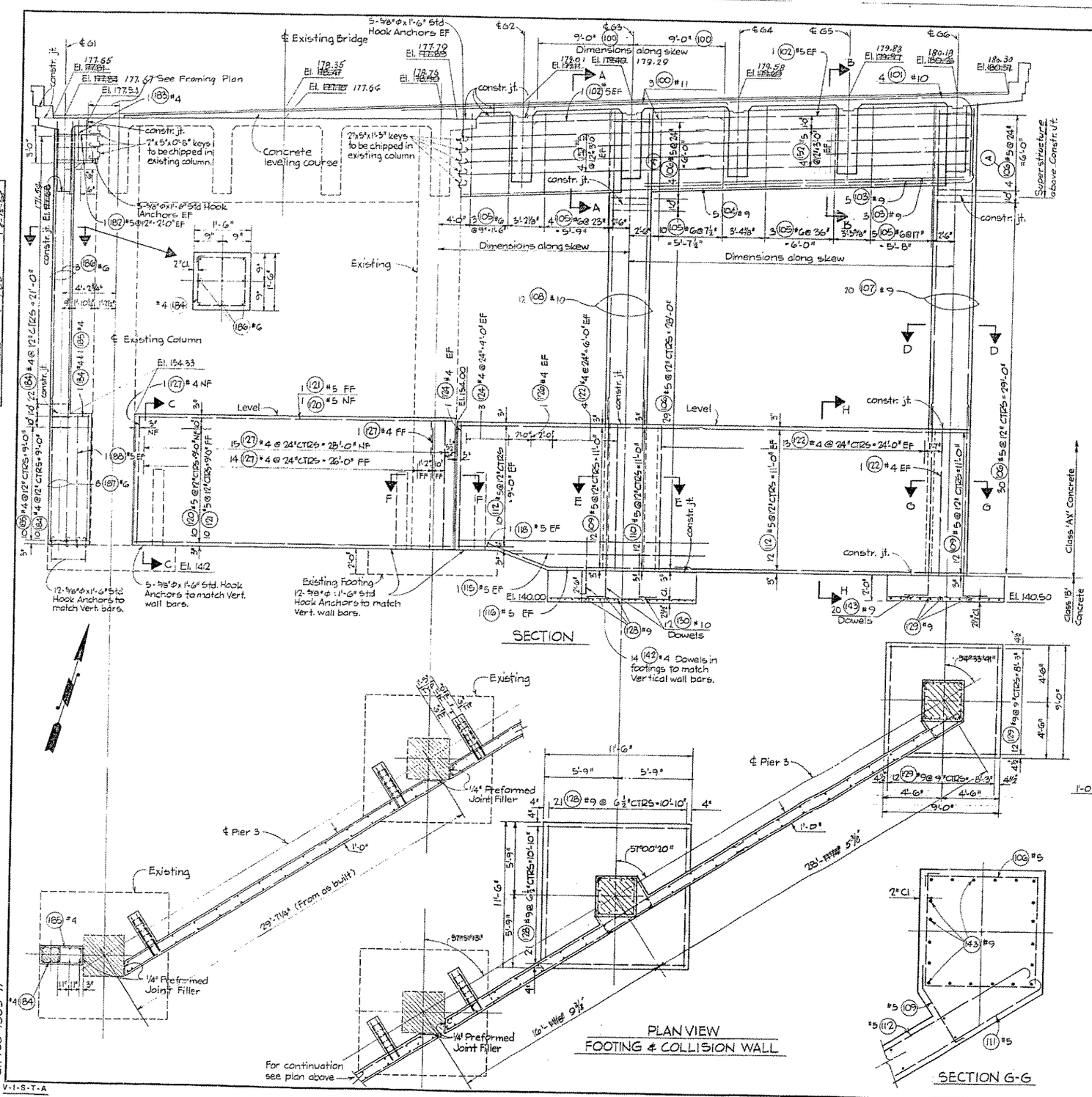

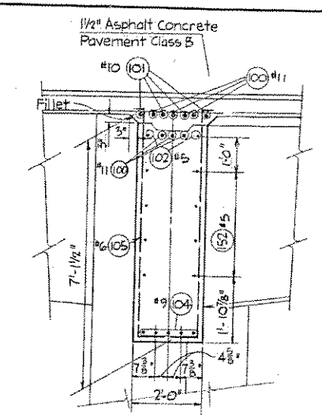

SECTION A-A

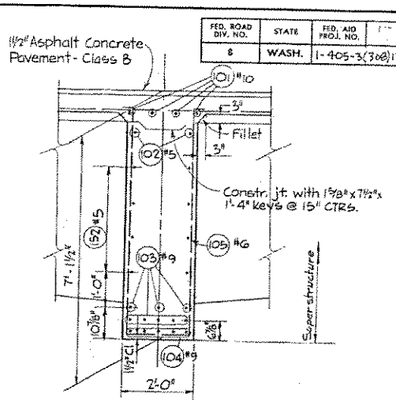

SECTION B-B

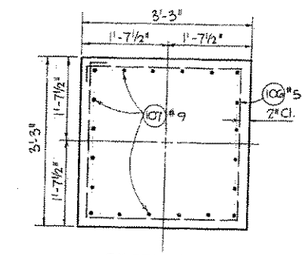

SECTION D-D

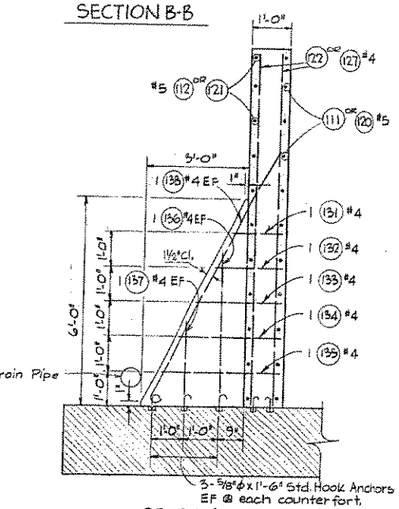

SECTION C-C

SECTION H-H SIMILAR

Note: See Drainage and Structure Notes for 6" Underdrain Pipe and gravel backfill for walls.

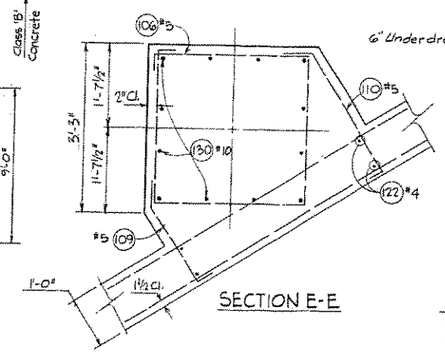

SECTION E-E

SECTION G-G

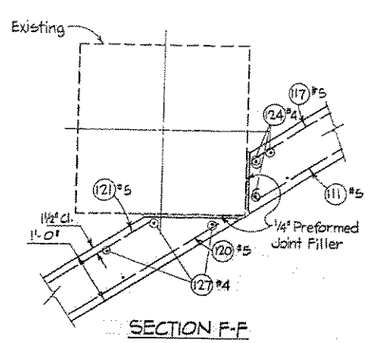

SECTION F-F

LEGEND

NF = NEAR FACE
FF = FAR FACE
EF = EACH FACE

SR 405 **MP 18.87 TO MP 21.83**

NE 100TH STREET TO NE 145TH STREET

KING COUNTY

N.P. RY. OVERCROSSING

PIER 3 - EAST BRIDGE

WASHINGTON STATE HIGHWAY COMMISSION
DEPARTMENT OF HIGHWAYS
OLYMPIA, WASHINGTON

GEORGE D. SAUNDERS, COMMISSIONER
R.E. MILLISON — DIRECTOR
H. WALLER — SECRETARY
JOHN H. RUPP

APPROVED Feb. 27, 1969

CONTRACT NO. 8615 SHEET 140 OF 169 SHEETS

SR405-1509-11

V-I-S-T-A

As Built Changes in Red 10-5-71

SR-405/61

FED. ROAD DIV. NO.	STATE	FED. AID PROJ. NO.		SHEET NO.	TOTAL SHEETS
8	WASH.	I-405-3(308)173		135	163

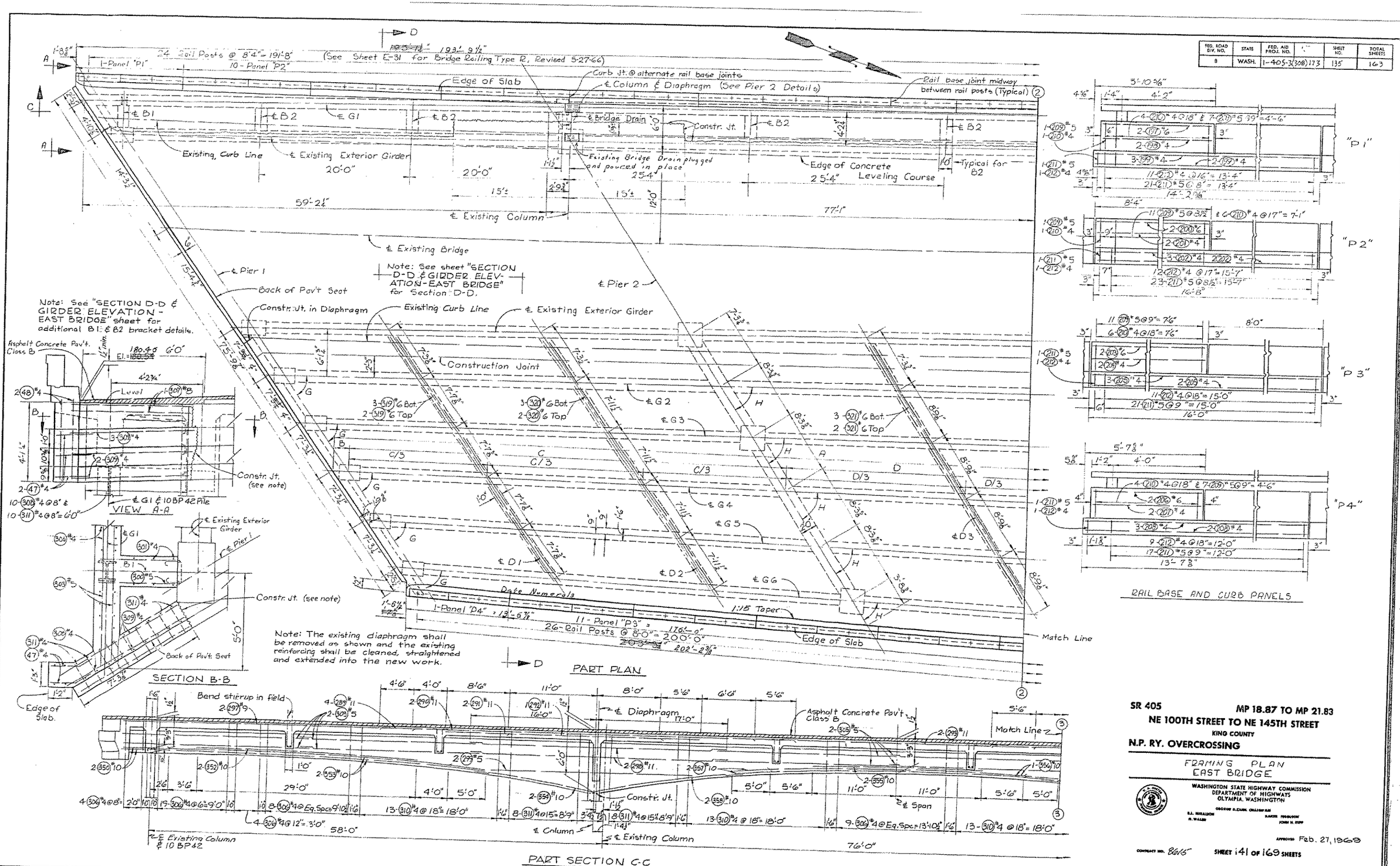

SR 405 MP 18.87 TO MP 21.83

NE 100TH STREET TO NE 145TH STREET

KING COUNTY

N.P. RY. OVERCROSSING

FRAMING PLAN
EAST BRIDGE

WASHINGTON STATE HIGHWAY COMMISSION
DEPARTMENT OF HIGHWAYS
OLYMPIA, WASHINGTON

GEORGE H. EMRK, CHAIRMAN
R.L. MILLISON
H. WALLIN
DANIEL THORNTON
JOHN H. RUPP

APPROVED Feb. 27, 1969

CONTRACT NO. 8615

SHEET 141 OF 169 SHEETS

SR405-1509-12

V-I-S-T-A

As Built Changes in Red 10-5-71

SR-405/51

FED. ROAD DIV. NO.	STATE	FED. AID PROJ. NO.		SHEET NO.	TOTAL SHEETS
8	WASH.	1-405-3(308)173		136	163

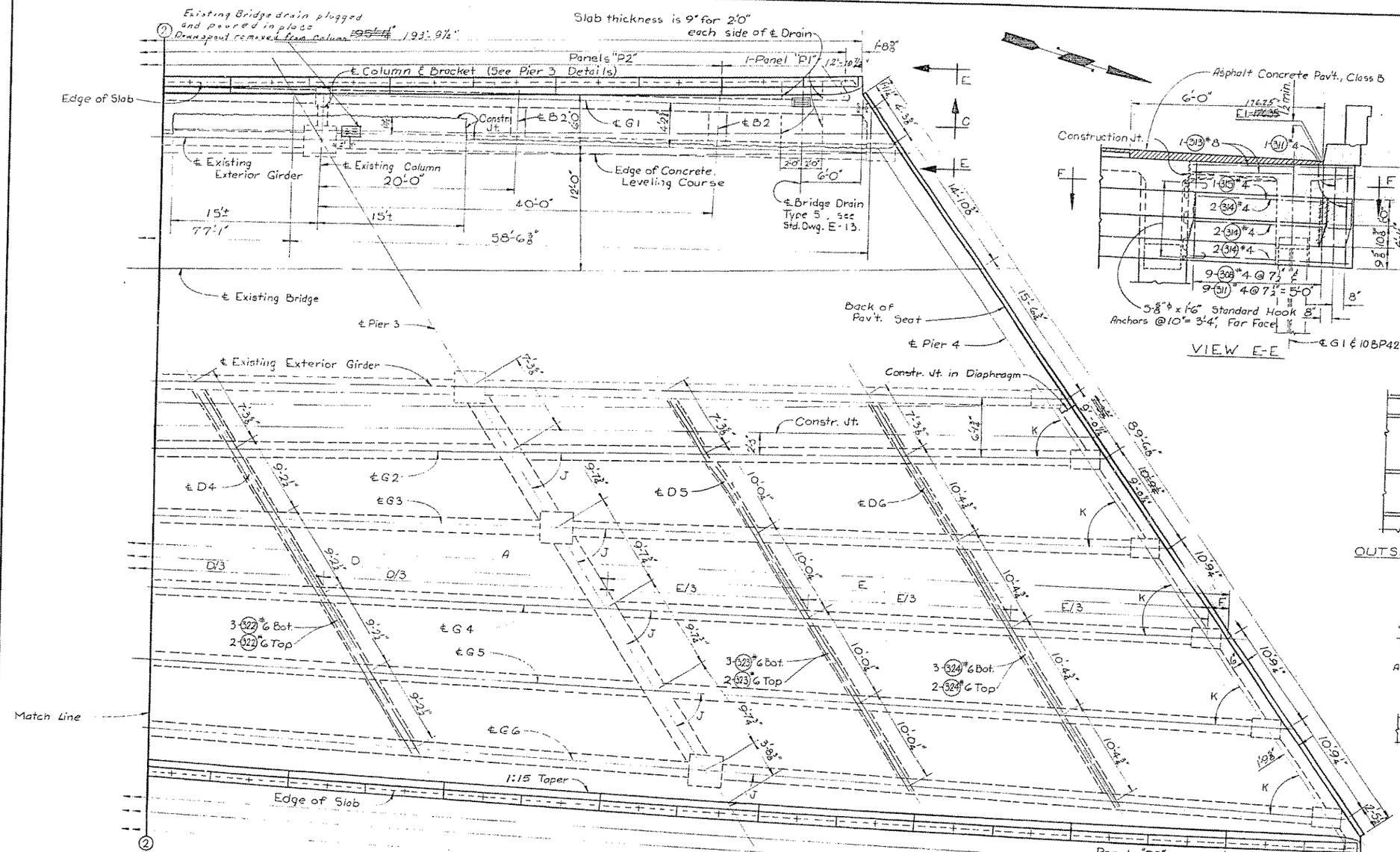

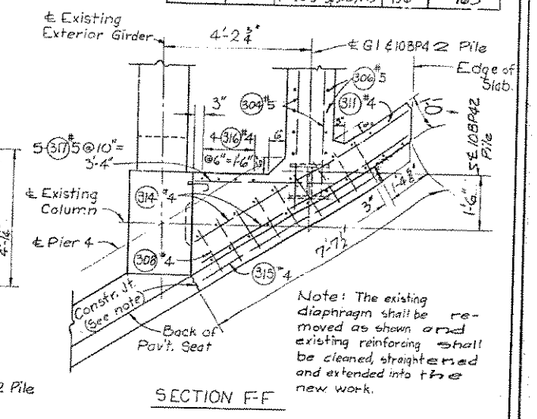

Note: The existing diaphragm shall be removed as shown and existing reinforcing shall be cleaned, straightened and extended into the new work.

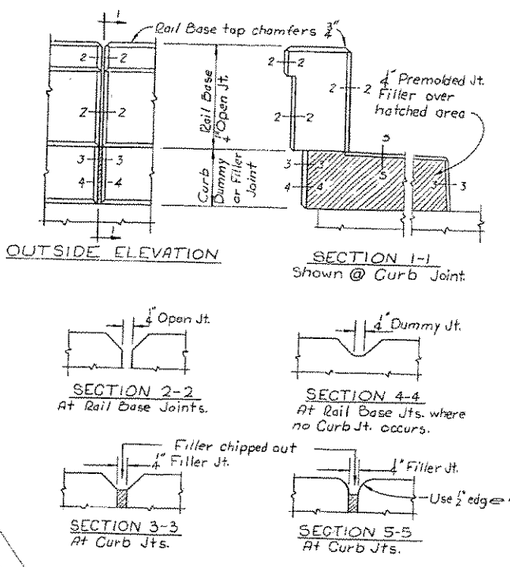

CURB & RAIL BASE JOINTS
All chamfers ½" except as noted.

Changed slightly due to revised construction

TABLE OF DIMENSIONS & ANGLES

	A	B	C	D	E	F	G	H	J	K
G2	195'-2"	2'-1⅝"	57'-4½"	75'-9⅜"	57'-8⅜"	2'-1⅝"	57°43'04"	57°51'13"	57°51'13"	57°18'27"
G3	197'-1½"	2'-1⅞"	57'-10¾"	76'-6⅛"	58'-4⅛"	2'-1⅞"	56°52'11"	57°00'20"	57°00'20"	56°27'34"
G4	199'-1⅜"	2'-2"	58'-5¼"	77'-2⅞"	59'-1⅛"	2'-2⅛"	56°02'18"	56°10'27"	56°10'27"	55°37'41"
G5	202'-2"	2'-2⅜"	58'-11¾"	77'-11⅞"	59'-9½"	2'-2½"	55°13'15"	55°21'34"	55°21'34"	54°48'48"
G6	203'-3"	2'-2⅝"	59'-6½"	78'-9⅛"	60'-6"	2'-2¾"	54°25'32"	54°33'41"	54°33'41"	54°00'55"

SR 405 **MP 18.87 TO MP 21.83**
NE 100TH STREET TO NE 145TH STREET
KING COUNTY
N.P. RY. OVERCROSSING

FRAMING PLAN
EAST BRIDGE

WASHINGTON STATE HIGHWAY COMMISSION
DEPARTMENT OF HIGHWAYS
OLYMPIA, WASHINGTON

GEORGE D. ZANK, CHAIRMAN
R.L. HAMILTON
H. WALSH
BARTE PERGUSON
JOHN M. SUTT

APPROVED Feb. 27, 1969

CONTRACT NO. 8615

SHEET 142 OF 169 SHEETS

As Built changes in Red 10-12-71
SR-405/51

SR 405-1509-13

V-I-S-T-A

FED. ROAD DIV. NO.	STATE	FED. AID PROJ. NO.		SHEET NO.	TOTAL SHEETS
8	WASH.	I-405-3(302)173		137	168

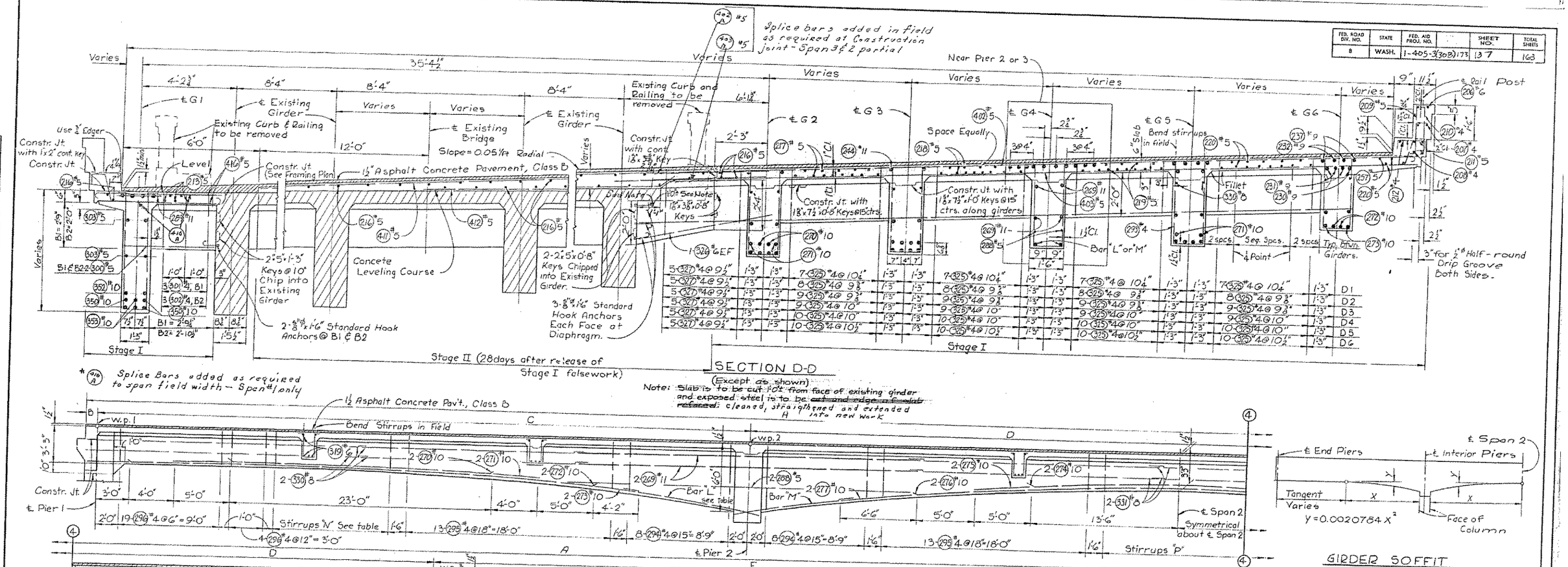

	Bar "L"	Bar "M"	Stirrups "N" Span 1	Stirrups "P" Span 2	Stirrups "Q" Span 3
G2	2-#10	2-#10	8-#4 @ Eq. Spc. = 9'-7½"	9-#4 @ Eq. Spc. = 12'-3⅜"	8-#4 @ Eq. Spc. = 9'-11⅝"
G3	2-#10	2-#10	8-#4 @ Eq. Spc. = 10'-1¼"	10-#4 @ Eq. Spc. = 13'-0⅝"	8-#4 @ Eq. Spc. = 10'-7⅞"
G4	2-#10	2-#10	8-#4 @ Eq. Spc. = 10'-8¼"	10-#4 @ Eq. Spc. = 13'-8⅞"	9-#4 @ Eq. Spc. = 11'-4⅛"
G5	2-#10	2-#10	9-#4 @ Eq. Spc. = 11'-2⅜"	11-#4 @ Eq. Spc. = 14'-5⅝"	9-#4 @ Eq. Spc. = 12'-0½"
G6	2-#10	2-#10	9-#4 @ Eq. Spc. = 11'-9½"	11-#4 @ Eq. Spc. = 15'-3⅛"	10-#4 @ Eq. Spc. = 12'-9"

	Span 1				Span 2				Span 3				
	℄ Pier 1	¼ pt.	½ pt.	¾ pt.	℄ Pier 2	¼ pt.	½ pt.	¾ pt.	℄ Pier 3	¼ pt.	½ pt.	¾ pt.	℄ Pier 4
Dead Load Deflection	0	-¼"	-¼"	-⅛"	0	-¼"	-⅝"	-¼"	0	-⅛"	-¼"	-¼"	0
Vertical Curve Correction	0	+¼"	+⅜"	+¼"	0	+⅜"	+½"	+⅜"	0	+¼"	+⅜"	+¼"	0
Total Camber Required	0	+½"	+⅝"	+⅜"	0	+⅝"	+⅛"	+⅝"	0	+⅜"	+⅝"	+½"	0

SR 405 **MP 18.87 TO MP 21.83**

NE 100TH STREET TO NE 145TH STREET

KING COUNTY

N.P. RY. OVERCROSSING

SECTION D-D & GIRDER ELEVATION
EAST BRIDGE

WASHINGTON STATE HIGHWAY COMMISSION
DEPARTMENT OF HIGHWAYS
OLYMPIA, WASHINGTON

GEORGE D. EANES, CHAIRMAN
R.E. HERALDSON, H. WALDE, BAKER FERGUSON, JOHN H. RUPP

APPROVED Feb. 27, 1969

CONTRACT NO. 8615 SHEET 143 OF 169 SHEETS

As Built Changes in Red 10-12-71

SR-405/51

SR 405-1509-14

V-I-S-T-A

19/22

FED. ROAD DIV. NO.	STATE	FED. AID PROJ. NO.		SHEET NO.	TOTAL SHEETS
8	WASH.	1-405-3(308)173		138	163

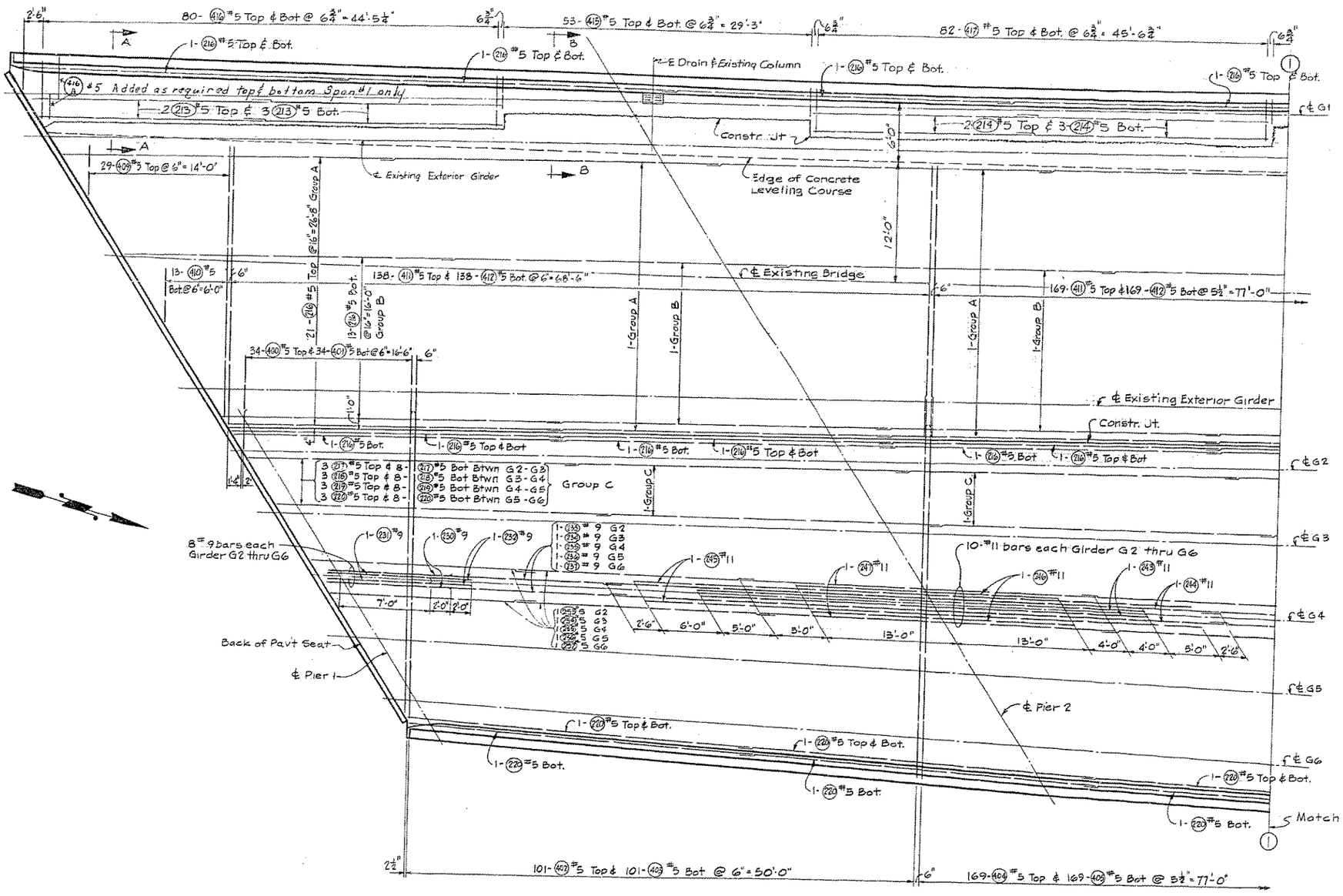

SLAB PLAN

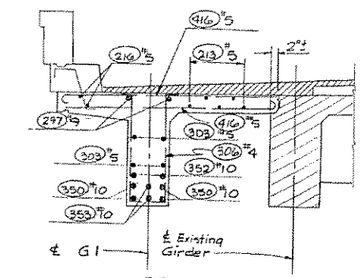

SECTION A-A

Note: Bottom soffit of girder G1 shall match the bottom of existing girder. Falsework shall support existing during construction of G1. The existing railing, curb & slab shall be removed to the limits as shown and exposed reinforcing shall be cleaned, straightened and extended into the new work.

Bridge Drain, Type 5, See Std. Sht. E-13

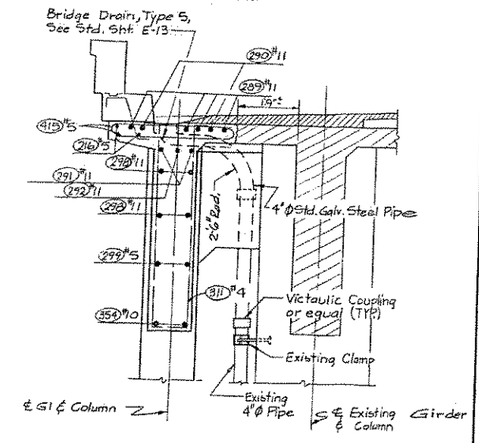

SECTION B-B

SR 405 **MP 18.87 TO MP 21.83**

NE 100TH STREET TO NE 145TH STREET

KING COUNTY

N.P. RY. OVERCROSSING

SLAB PLAN
EAST BRIDGE

WASHINGTON STATE HIGHWAY COMMISSION
DEPARTMENT OF HIGHWAYS
OLYMPIA, WASHINGTON

GEORGE D. EARN, CHAIRMAN
R.A. MCKALSON
H. WALSH
SAKIE FORGESON
JOHN H. STUPP

APPROVED Feb. 27, 1969

CONTRACT NO. 8615 SHEET 144 OF 169 SHEETS

As Built Changes in Red 10-12-71

SR-405/51

SR405-1509-15

V-1-S-T-A

FED. ROAD DIV. NO.	STATE	FED. AID PROJ. NO.		SHEET NO.	TOTAL SHEETS
8	WASH.	I-405-3(308)173		139	163

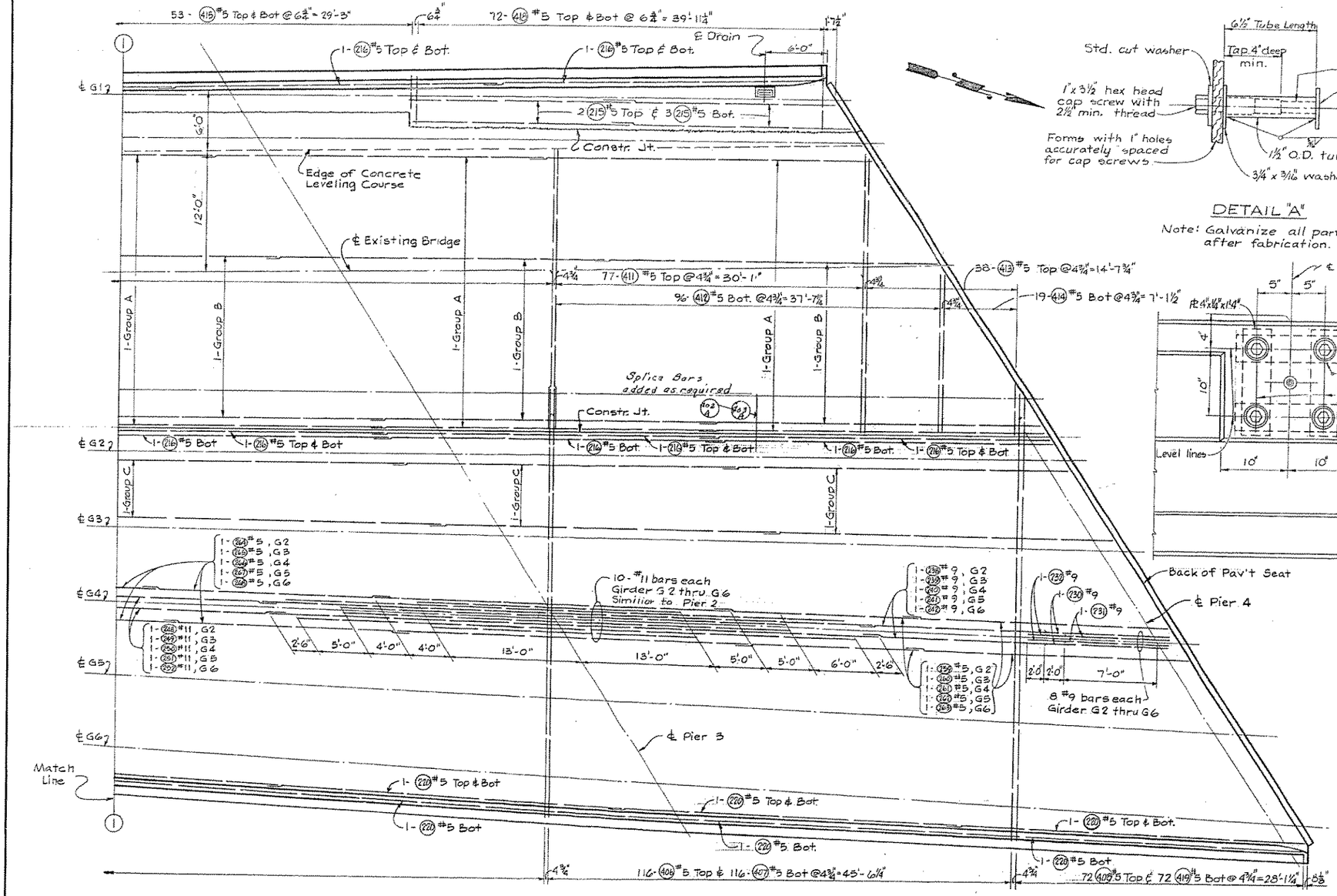

SLAB PLAN

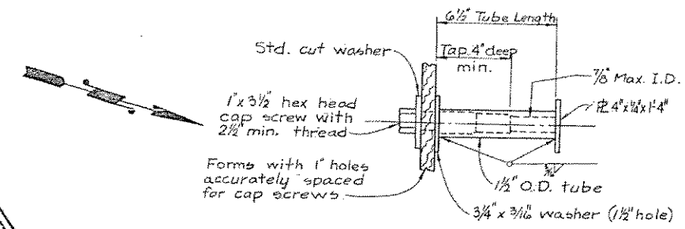

DETAIL "A"

Note: Galvanize all parts after fabrication.

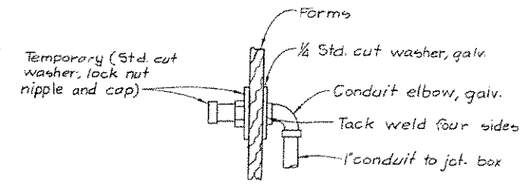

DETAIL "B"

Note: Furnish recessed galv. plug and install in elbow after forms are removed.

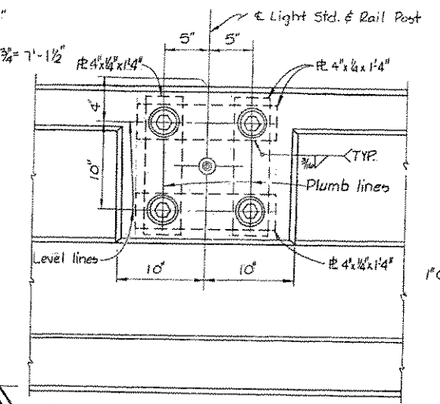

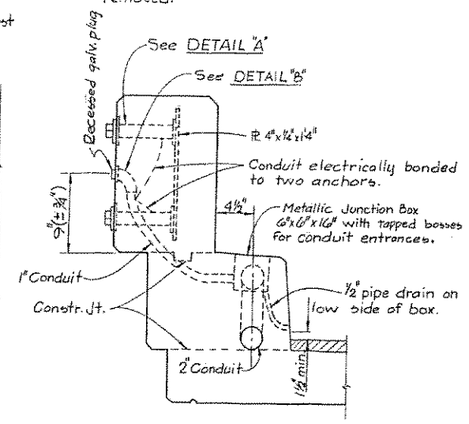

LIGHTING BRACKET ANCHORAGE

Note: See LAYOUT sheet for location

SR 405 **MP 18.87 TO MP 21.83**

NE 100TH STREET TO NE 145TH STREET

KING COUNTY

N.P. RY. OVERCROSSING

SLAB PLAN
EAST BRIDGE

WASHINGTON STATE HIGHWAY COMMISSION
DEPARTMENT OF HIGHWAYS
OLYMPIA, WASHINGTON

GEORGE O. ZEAMS, CHAIRMAN
R.A. MILLIGAN — SAMES FERGUSON
R. WALSH — JOHN H. MAY

APPROVED Feb. 27, 1969

CONTRACT NO. 8645 SHEET 145 OF 169 SHEETS

ENGINEERING ENGINEER	RJW	3-28-68
DESIGN ENGINEER	JAT	3-28-68
DESIGN CHECKED		3-28-68
DRAWN BY	RJW	3-28-68
DESIGN CHECKED		3-28-68
QUANTITIES COMPUTED		3-28-68
QUANTITIES CHECKED		3-28-68

DRAWN		DATE
TRACED		3-28-68
DESIGN CHECKED		3-28-68
CHF. ENGR.		3-28-68
ASSC. ENGR.		
DIST. ENGR.		

SR405-1509-16

V-1-S-T-A

As Built changes in Red 10-12-21

SR-4/25/61

FED. ROAD DIV. NO.	STATE	FED. AID PROJ. NO.	SHEET NO.	TOTAL SHEETS
8	WASH.	I-405-3(308)173	140	163

S = Bar is included in substructure quantities.
F = Bar to be field welded.
T = Tie or Stirrup.
H = A.S.T.M. A-432.
V = Bar dimensions vary between dimensions shown on this line and the following line.

Mark No.	Location	Size	No. Req'd	Bend Type	Tie or Stir	Fld Weld	Substr	A-432	Varies	No. Each	U Ft	U In	W Ft	W In	X Ft	X In	Y Ft	Y In	Z Ft	Z In	θ1 Deg	θ2 Deg	Length Ft	Length In	Weight Lbs
1	PIER 1 FOOT LONGIT BOT	6	7	69			S				23	1.0	2	8.0	2	8.0		0.0		0.0			26	10.	282
2	PIER 1 FOOT LONGIT BOT	6	7	69			S				5	7.0	3	8.0	3	8.0		0.0		0.0			10	9.	113
3	PIER 1 FOOT LONGIT BOT	6	7	50			S				6	1.0											6	1.	64
4	PIER 1 FOOT LONGIT TOP	6	6	50			S				15	11.0											15	11.	143
5	PIER 1 FOOT LONGIT TOP	6	6	65			S					0.0	3	6.0	8	6.0							11	10.	107
6	PIER 1 FOOT LONGIT TOP	6	6	65			S					0.0	3	6.0	15	6.0							18	10.	170
7	PIER 1 FOOT TRANSV BOT / TOP	6	84	50			S				5	2.0											5	2.	652
9	PIER 1/4 FOOT TO COL DOWELS	9	160	65			S				2	0.0	4	7.0		0.0							6	4.	~~3423~~ 3493
11	PIER 1 COLUMN VERT	9	16	50			S				27 28	5.0											27 28	5.5	~~1546~~ 1600
12	PIER 1 COLUMN VERT	9	16	50			S				29 28	2.0											29 28	2.2	~~1532~~ 1587
13	PIER 1 COLUMN VERT	9	16	50			S				26 25	5.0											26 25	5.5	~~1383~~ 1437
14	PIER 1 COLUMN VERT	9	16	50			S				21 22	9.0											21 22	9.9	~~1238~~ 1292
15	PIER 1 COLUMN VERT	9	16	50			S				21 22	8.0											22 22	8.6	~~1224~~ 1218
16	PIER 1/4 COLUMN STIRRUPS	4	240 (10)	60	S						2	8.0	1	8.0		5.0							9 8	11.1	~~1424~~ 119
17	PIER 1/4 DIAPHRAGM STIRRUPS	4	69	62								10.0	3	8.0	3	6.0		8.0		8.0			9 8	10.0	407 416
18	PIER 1/4 DIAPHRAGM TIES	4	131	64	T							4.0	1	4.0		4.0		0.0					1	10.	160
19	PIER 1 DIAPHRAGM LONGIT	8	4	50							40	6.0											40	6.	433
20	PIER 1 DIAPHRAGM LONGIT	4	8	50							19	6.0											19	6.	104
21	PIER 1 DIAPHRAGM LONGIT	4	2	50							18	10.0											18	10.	25
31	PIER 4 FOOT LONGIT BOT	7	7	69			S				32	6.0	2	0.0	2	0.0		0.0		0.0			35	4.	505
32	PIER 4 FOOT LONGIT BOT	7	7	69			S				10	0.0	2	0.0	2	0.0		0.0		0.0			12	10.	183
33	PIER 4 FOOT LONGIT BOT	7	7	50			S				7	2.0											7	2.	103
34	PIER 4 FOOT LONGIT TOP	6	6	50			S				31	8.0											31	8.	285
35	PIER 4 FOOT LONGIT TOP	6	6	65			S					0.0	2	6.0	11	4.0							13	8.	123
36	PIER 4 FOOT LONGIT TOP	6	6	65			S					0.0	2	6.0	10	2.0							12	6.	113
37	PIER 4 FOOT LONGIT TOP / BOT	6	108	50			S				5	2.0											5	2.	838
40	PIER 4 COLUMN VERT	9	16	50			S				27 28	3.0											27 28	3 3.	~~1428~~ 1482
41	PIER 4 COLUMN VERT	9	16	50			S				27 28	0.0											27 28	0.	~~1414~~ 1469
42	PIER 4 COLUMN VERT	9	16	50			S				26 25	9.0											26 25	9.	~~1401~~ 1455
43	PIER 4 COLUMN VERT	9	16	50			S				20 23	11.0											20 23	11.	~~1301~~ 1356
44	PIER 4 COLUMN VERT	9	16	50			S				23 22	11.0 2											23 22	11.2	~~1247~~ 126
45	PIER 4 DIAPHRAGM LONGIT	8	4	50							51	11.0											51	11.	554
46	PIER 4 DIAPHRAGM LONGIT	4	10	50							26	8.0											26	8.	178
47	PIER 4 DIAPHRAGM END HORIZ	4	12	69							1	1.0	1	0.0		8.0		0.0		0.0			2	4.	18
48	PIER 4 DIAPHRAGM END VERT	4	8	64								9.0	3	8.0		9.0		0.0					4	11.	26
100	CROSSBEAM TOP	11	6	50							18	0.0											16	0.	574
101	CROSSBEAM TOP	10	4	65							3	0.0	48	0.0		0.0							50	8.	821
102	CROSSBEAM SIDE	5	4	50							22	10.0											22	10.	95
103	CROSSBEAM BOT	9	8	50							29	0.0											29	0.	789
104	CROSSBEAM BOT	9	5	51							43	9.0											45	0.	765
105	CROSSBEAM STIRRUP PIER 2 / 3	6	45 (126)	63	T						1	9.0	6	7.5	6	7.5		7.0		7.0			15	7.	1053
106	COLUMN HOOP PIER 2 / 3	5	136	60	T		S				2	11.0	2	11.0		6.0							12	2.	~~1723~~ 1511
107	COLUMN VERT PIER 2 / 3	9	20	50			S				25	6.0											25	6.	1734
108	COLUMN VERT PIER 2 / 3	10	12	50			S				24	9.0											24	9.	1278
109	CRASHWALL TIE	5	36	69			S					0.0		2.0		6.0	1	10.0		6.0			2	8.	100
110	CRASHWALL TIE	5	36	69			S					0.0		2.0		6.0	2	8.0		6.0			3	6.	131
112	CRASHWALL HORIZ	5	44	51			S				23	5.0											24	0.	1101
115	CRASHWALL HORIZ	5	2	50			S				17	0.0											17	0.	35
116	CRASHWALL HORIZ	5	2	69			S				15	3.0	5	6.0	2	0.0		0.0		0.0			21	3.	44
118	CRASHWALL HORIZ	5	2	50			S				5	6.0											5	6.	11
120	CRASHWALL HORIZ	5	22	50			S				28	11.0											28	11.	664
121	CRASHWALL HORIZ	5	22	50			S				27	4.0											27	4.	627
122	CRASHWALL VERT	4	36	50			S				11	4.0											11	4.	273
124	CRASHWALL VERT	4	8	50			S				9	10.0											9	10.	53
126	CRASHWALL VERT	4	2	50			S				10	4.0											10	4.	14
127	CRASHWALL VERT	4	31	50			S				10	2.0											10	2.	211
128	FOOTING LONGIT AND TRANSV	9	84	50			S				11	2.0											11	2.	3189
129	FOOTING LONGIT AND TRANSV	9	48	50			S				8	8.0											8	8.	1414
130	FOOTING COLUMN DOWEL PIER 2	10	12	65			S				2	0.0	16	8.0		0.0							18	4.	945
131	CRASHWALL PIER 2 / 3	4	6	63	T		S					8.0	1	2.0	1	2.0		5.0		5.0			3	6.	14
132	CRASHWALL PIER 2 / 3	4	6	63	T		S					8.0	1	8.0	1	8.0		5.0		5.0			4	6.	18
133	CRASHWALL PIER 2 / 3	4	6	63	T		S					8.0	2	2.0	2	2.0		5.0		5.0			5	6.	22
134	CRASHWALL PIER 2 / 3	4	6	63	T		S					8.0	2	8.0	2	8.0		5.0		5.0			6	6.	26
135	CRASHWALL PIER 2 / 3	4	6	63	T		S					8.0	3	2.0	3	2.0		5.0		5.0			7	6.	30
136	CRASHWALL PIER 2 / 3	4	12	50			S				4	4.0											4	4.	35
137	CRASHWALL PIER 2 / 3	4	12	50			S				2	4.0											2	4.	19
138	CRASHWALL PIER 2 / 3	4	12	51			S				7	9.0											8	3.	66
139	CRASHWALL PIER 2	4	11	52			S				3	7.0											4	7.	34
140	CRASHWALL PIER 2	4	11	52			S				2	2.0											3	2.	23
141	CRASHWALL PIER 2	4	11	52			S				2	0.0											3	0.	22
142	DOWELS FTNG TO WALL PIER 2/3	4	28	65			S					5.0	3	6.0		0.0							3	10.	71
143	FOOTING COLUMN DOWEL PIER 3	9	20	65			S				1	6.0	16	8.0		0.0							17	11.	1216
144	FOOTING COLUMN DOWEL PIER 2	9	20	65			S				1	6.0	17	6.0		0.0							18	9.	1272
146	CROSSBEAM TOP PIER 2	11	6	50							16	0.0											16	0.	510
147	CROSSBEAM TOP PIER 2	10	4	65							3	0.0	44	0.0		0.0							46	8.	803
148	CROSSBEAM SIDE PIER 2	5	4	50							20	10.0											20	10.	87
149	CROSSBEAM BOTTOM PIER 2	9	8	50							25	0.0											25	0.	680
150	CROSSBEAM BOTTOM PIER 2	9	5	51							40	0.0											41	3.	701
151	CROSSBEAM SIDE PIER 2	5	16	50							20	10.0											20	10.	348
152	CROSSBEAM SIDE PIER 3	5	16	50							22	8.0											22	8.	378
154	COLUMN VERT PIER 2	10	12	50			S				26	0.0											26	0.	1343
155	COLUMN VERT PIER 2	9	20	50			S				26	8.0											26	8.	1813
159	FOOTING COLUMN DOWEL PIER 2	10	12	65			S				1	6.0	17	6.0		0.0							18	8.	962
~~160~~	~~CRASHWALL HORIZ~~	~~5~~	~~46~~	~~50~~			S				~~20~~	~~8.0~~											~~20~~	~~8.~~	~~992~~
161	CRASHWALL HORIZ	5	2	65			S				11	1.0	5	8.0	1	6.0		0.0		0.0			17	1.	36
167	CRASHWALL VERT	4	30	50			S				11	4.0											11	4.	227
169	CRASHWALL VERT	4	2	50			S				10	10.0											10	10.	14
170	CRASHWALL VERT	4	8	50			S				10	4.0											10	4.	55
171	CRASHWALL VERT	4	30	50			S				10	7.0											10	7.	212
182	DIAPHRAGM SIDE PIER 2 / 3	5	12	50							3	1.0											3	1.	39
183	DIAPHRAGM STIRRUP	4	4	63								8.0	3	3.0	3	3.0		5.0		5.0			7	6.	20
184	COLUMN HOOPS	4	68	60							1	2.0	1	2.0		5.0							4	11.	221
185	COLUMN CRASHWALL HOOPS	4	11	60			S				3	0.0	1	2.0		5.0							8	7.	63
186	COLUMN VERTICAL	6	8	50			S				23	2.0											23	2.	278
187	COLUMN VERTICAL	6	8	50			S				12	3.0											12	3.	147
188	CRASHWALL VERTICAL	5	4	50			S				10	2.0											10	2.	42
194	COLUMN VERTICAL	6	8	50			S				24	3.0											24	3.	291
195	COLUMN VERTICAL	6	8	50			S				12	6.0											12	6.	150
196	CRASHWALL VERTICAL	5	6	50			S				10	7.0											10	7.	66
197	RAILBASE HORIZ PANEL 1	6	4	50			S				5	2.0											5	2.	31
198	RAILBASE HORIZ PANEL 1	4	4	50							5	2.0											5	2.	14
199	CURB HORIZ PANEL 1	4	10	50							13	10.0											13	10.	92
200	RAILBASE HORIZ PANEL 1 / 2	6	44	50							8	0.0											8	0.	529
201	RAILBASE HORIZ PANEL 1 / 2	4	44	50							8	0.0											8	0.	235
202	CURB HORIZ PANEL 2	4	50	50							16	4.0											16	4.	546
203	RAILBASE HORIZ PANEL 3 / 4	6	48	50							7	8.0											7	8.	553
204	RAILBASE HORIZ PANEL 3 / 4	4	48	50							7	8.0											7	8.	246
205	CURB HORIZ PANEL 3	4	55	50							15	8.0											15	8.	576
206	RAILBASE HORIZ PANEL 4	6	4	50							4	10.0											4	10.	29
207	RAILBASE HORIZ PANEL 4	4	4	50							4	10.0											4	10.	13
208	CURB HORIZ PANEL 4	4	10	50							13	3.0											13	3.	89
209	RAILBASE VERT	5	558	65								8.5	2	0.5		8.5							3	3.	~~1863~~ 1891
210	RAILBASE VERT	4	316	64								5.0	2	0.5		5.0		0.0					2	8.	~~594~~ 563

Mark No.	Location	Size	No. Req'd	Bend Type	Tie or Stir	Fld Weld	Substr	A-432	Varies	No. Each	U Ft	U In	W Ft	W In	X Ft	X In	Y Ft	Y In	Z Ft	Z In	θ1 Deg	θ2 Deg	Length Ft	Length In	Weight Lbs
211	CURB VERT	5	562	69								6.0		4.0	1	2.0		6.0		6.0			2	5.	1410
212	CURB HORIZ	4	306	65								5.0	1	0.0		0.0							1	4.	264
213	SLAB LONGIT TOP / BOT	5	10	50							23	6.0											23	6.	245
214	SLAB LONGIT TOP / BOT	5	10	50							24	0.0											24	0.	250
215	SLAB LONGIT TOP / BOT	5	10	50							21	6.0											21	6.	224
216	SLAB LONGIT TOP / BOT	5	234	50							33	10.0											33	10.	8257
217	SLAB LONGIT TOP / BOT	5	~~48~~ 66	50							34	2.0											34	2.	~~1711~~ 2352
218	SLAB LONGIT TOP / BOT	5	~~48~~ 66	50							34	6.0											34	6.	~~1727~~ 2375
219	SLAB LONGIT TOP / BOT	5	~~48~~ 66	50							35	0.0											35	0.	~~1752~~ 2409
220	SLAB LONGIT TOP / BOT	5	~~66~~ 84	50							35	2.0											35	2.	~~2421~~ 3086
230	GIRDER TOP END SPANS	9	20	65								0.0	10	0.0	3	0.0							12	9.	864
231	GIRDER TOP END SPANS	9	20	65								0.0	8	0.0	3	0.0							10	9.	728
232	GIRDER TOP END SPANS	9	20	65								0.0	12	4.0	3	0.0							15	1.	1023
233	GIRDER TOP END SPANS	9	2	65								0.0	30	1.0	3	0.0							32	10.	223
234	GIRDER TOP END SPANS	9	2	65								0.0	30	7.0	3	0.0							33	4.	226
235	GIRDER TOP END SPANS	9	2	65								0.0	31	2.0	3	0.0							33	11.	230
236	GIRDER TOP END SPANS	9	2	65								0.0	31	8.0	3	0.0							34	5.	234
237	GIRDER TOP END SPANS	9	2	65								0.0	32	3.0	3	0.0							35	0.	238
238	GIRDER TOP END SPANS	9	2	65								0.0	30	5.0	3	0.0							33	2.	225
239	GIRDER TOP END SPANS	9	2	65								0.0	31	1.0	3	0.0							33	10.	230
240	GIRDER TOP END SPANS	9	2	65								0.0	31	10.0	3	0.0							34	7.	235
241	GIRDER TOP END SPANS	9	2	65								0.0	32	6.0	3	0.0							35	3.	239
242	GIRDER TOP END SPANS	9	2	65								0.0	33	3.0	3	0.0							36	0.	245
243	GIRDER TOP INTERIOR PIERS	11	20	50							44	0.0											44	0.	4675
244	GIRDER TOP INTERIOR PIERS	11	20	50							60	0.0											60	0.	6376
245	GIRDER TOP INTERIOR PIERS	11	20	50							55	0.0											55	0.	5844
246	GIRDER TOP INTERIOR PIERS	11	20	50							26	0.0											26	0.	2763
247	GIRDER TOP INTERIOR PIERS	11	20	50							35	0.0											35	0.	3719
248	GIRDER TOP CENTER SPAN	11	~~10~~ 20	50							25	9.0											25	9.	~~1368~~ 274
249	GIRDER TOP CENTER SPAN	11	~~10~~ 20	50							26	6.0											26	6.	~~1408~~ 282
250	GIRDER TOP CENTER SPAN	11	~~10~~ 20	50							27	3.0											27	3.	~~1448~~ 290
251	GIRDER TOP CENTER SPAN	11	~~10~~ 20	50							28	0.0											28	0.	~~1488~~ 298
252	GIRDER TOP CENTER SPAN	11	~~10~~ 20	50							28	10.0											28	10.	~~1532~~ 306
253	SLAB LONGIT TOP SPAN ONE	5	4	50							22	4.0											22	4.	93
254	SLAB LONGIT TOP SPAN ONE	5	4	50							22	7.0											22	7.	94
255	SLAB LONGIT TOP SPAN ONE	5	4	50							22	10.0											22	10.	95
256	SLAB LONGIT TOP SPAN ONE	5	4	50							23	1.0											23	1.	96
257	SLAB LONGIT TOP SPAN ONE	5	4	50							23	6.0											23	6.	98
259	SLAB LONGIT TOP SPAN THREE	5	4	50							22	7.0											22	7.	94
260	SLAB LONGIT TOP SPAN THREE	5	4	50							22	1.0											22	1.	92
261	SLAB LONGIT TOP SPAN THREE	5	4	50							23	3.0											23	3.	97
262	SLAB LONGIT TOP SPAN THREE	5	4	50							23	7.0											23	7.	98
263	SLAB LONGIT TOP SPAN THREE	5	4	50							23	11.0											23	11.	100
264	SLAB LONGIT TOP SPAN TWO	5	4	50							23	4.0											23	4.	97
265	SLAB LONGIT TOP SPAN TWO	5	4	50							23	9.0											23	9.	99
266	SLAB LONGIT TOP SPAN TWO	5	4	50							24	0.0											24	0.	100
267	SLAB LONGIT TOP SPAN TWO	5	4	50							24	6.0											24	6.	102
268	SLAB LONGIT TOP SPAN TWO	5	4	50							24	10.0											24	10.	104
269	GIRDER SIDE INTERIOR PIERS	11	40	50							30	0.0											30	0.	6376
270	GIRDER BOTTOM END SPANS	10	20	50							23	0.0											23	0.	1979
271	GIRDER BOTTOM END SPANS	10	20	50							32	0.0											32	0.	2754
272	GIRDER BOTTOM END SPANS	10	20	50							41	0.0											41	0.	3528
273	GIRDER BOTTOM END SPANS	10	20	50							49	6.0											49	6.	4260
274	GIRDER BOTTOM CENTER SPAN	10	10	50							27	0.0											27	0.	1162
275	GIRDER BOTTOM CENTER SPAN	10	10	50							37	0.0											37	0.	1592
276	GIRDER BOTTOM CENTER SPAN	10	10	50							47	0.0											47	0.	2022
277	GIRDER BOTTOM CENTER SPAN	10	10	50							60	0.0											60	0.	2582
278	GIRDER BOTTOM INTERIOR PIERS	10	4	50							14	8.0											14	8.	252
279	GIRDER BOTTOM INTERIOR PIERS	10	4	50							15	2.0											15	2.	261
280	GIRDER BOTTOM INTERIOR PIERS	10	4	50							16	0.0											16	0.	275
281	GIRDER BOTTOM INTERIOR PIERS	10	4	50							16	8.0											16	8.	287
282	GIRDER BOTTOM INTERIOR PIERS	10	4	50							17	5.0											17	5.	300
283	GIRDER BOTTOM INTERIOR PIERS	10	4	50							13	3.0											13	3.	228
284	GIRDER BOTTOM INTERIOR PIERS	10	4	50							13	7.0											13	7.	234
285	GIRDER BOTTOM INTERIOR PIERS	10	4	50							13	11.0											13	11.	240
286	GIRDER BOTTOM INTERIOR PIERS	10	4	50							14	3.0											14	3.	245
287	GIRDER BOTTOM INTERIOR PIERS	10	4	50							14	7.0											14	7.	251
288	GIRDER SIDES INTERIOR PIERS	5	20	50							28	0.0											28	0.	584
289	G1 TOP LONGIT AT COLUMN	11	8	50							53	6.0											53	6.	2274
290	G1 TOP LONGIT AT COLUMN	11	4	50							43	6.0											43	6.	924
291	G1 TOP LONGIT AT COLUMN	11	4	50							35	6.0											35	6.	754
292	G1 TOP LONGIT AT COLUMN	11	2	50							19	0.0											19	0.	202
293	G1 TOP LONGIT AT CENTER SPAN	11	2 (4)	50							33	6.0											33	6.	~~212~~ 356
294	G2 THRU G6 STIRRUPS	4	160	63							1	3.0	6	6.0	6	6.0		0.0		0.0			14	0.	1496
295	G2 THRU G6 STIRRUPS	4	260	63							1	3.0	5	4.0	5	4.0		0.0		0.0			11	8.	2026
296	G2 THRU G6 STIRRUPS	4	367	63							1	3.0	3	9.0	3	9.0		0.0		0.0			8	6.	2084
297	G1 TOP LONGIT END SPAN	9	4	50							36	0.0											36	0.	490
298	G1 SIDE AT COLUMN	11	8	50							33	0.0											33	0.	1403
299	G1 SIDE AT COLUMN	5	4	50							25	0.0											25	0.	104
300	E1 AND E2 BOTTOM	5	14	50							3	1.0											3	1.	45
301	E1 STIRRUP	4	3	63							1	3.0	3	9.0	3	9.0		0.0		0.0			8	6.	17
302	E2 STIRRUP	4	18	63								9.0	3	0.0	3	0.0		0.0		0.0			6	6.	78
303	G1 SIDE SPAN ONE	5	8	50							26	0.0											26	0.	217
304	G1 SIDE SPAN THREE	5	8	50							23	6.0											23	6.	196
305	G1 SIDE CENTER SPAN	5	8	50							25	6.0											25	6.	213
306	G1 STIRRUP	4	75	63							1	0.0	3	9.0	3	9.0		0.0		0.0			8	3.	413
307	DIAPHRAGM LEFT PIER ONE	8	2	50							7	2.0											7	2.	38
308	DIAPHRAGM LEFT PIER ONE/FOUR	4	19	64								6.0	1	2.0		6.0		0.0					1	11.	24
309	DIAPHRAGM LEFT PIER ONE	4	7	50							7	2.0											7	2.	34
310	G1 STIRRUP	4	52	63							1	0.0	5	4.0	5	4.0		0.0		0.0			11	5.	397
311	DIAPHRAGM LEFT PIER ONE/FOUR	4	21	62								8.0	3	8.0	3	6.0		8.0		8.0			8	8.	122
312	G1 STIRRUP	4	32	63							1	0.0	6	6.0	6	6.0		0.0		0.0			13	9.	294
313	DIAPHRAGM LEFT PIER FOUR	8	2	50							7	3.0											7	3.	39
314	DIAPHRAGM LEFT PIER FOUR	4	6	50							7	3.0											7	3.	29
315	DIAPHRAGM LEFT PIER FOUR	4	1	50							5	10.0											5	10.	4
316	DIAPHRAGM LEFT PIER FOUR	4	4	64					V	1	2	6.0	3	8.0	2	6.0		0.0					8	5.	
											1	0.0	3	8.0	1	0.0		0.0					5	5.	18
317	DIAPHRAGM LEFT PIER FOUR	5	5	50							4	0.0											4	0.	21
319	DIAPHRAGM LONGIT C1	6	5	50							37	5.0											37	5.	281
320	DIAPHRAGM LONGIT C2	6	5	50							38	9.0											38	9.	291
321	DIAPHRAGM LONGIT C3	6	5	50							42	0.0											42	0.	315
322	DIAPHRAGM LONGIT C4	6	5	50							43	10.0											43	10.	329
323	DIAPHRAGM LONGIT C5	6	5	50							47	0.0											47	0.	353
324	DIAPHRAGM LONGIT C6	6	5	50							48	6.0											48	6.	364
325	DIAPHRAGM STIRRUP	4	212	63								9.0	2	9.0	2	9.0		0.0		0.0			6	0.	850
326	DIAPHRAGM LONGIT C1 THRU C6	6	12	50							6	3.0											6	3.	113
327	DIAPHRAGM STIRRUP C1 THRU C6	4	30	63					V	5		9.0	3	0.0	3	0.0		0.0		0.0			6	6.	
												0.0	3	9.0	3	9.0		0.0		0.0			7	5.	139
330	GIRDER SIDE SPAN ONE	8	20	50							25	3.0											25	3.	~~1348~~ 2697
331	GIRDER SIDE SPAN TWO	8	20	50							28	4.0											28	4.	~~1513~~ 3026
332	GIRDER SIDE SPAN THREE	8	20	50							26	4.0											26	4.	~~1406~~ 2812

BENDING DIAGRAMS

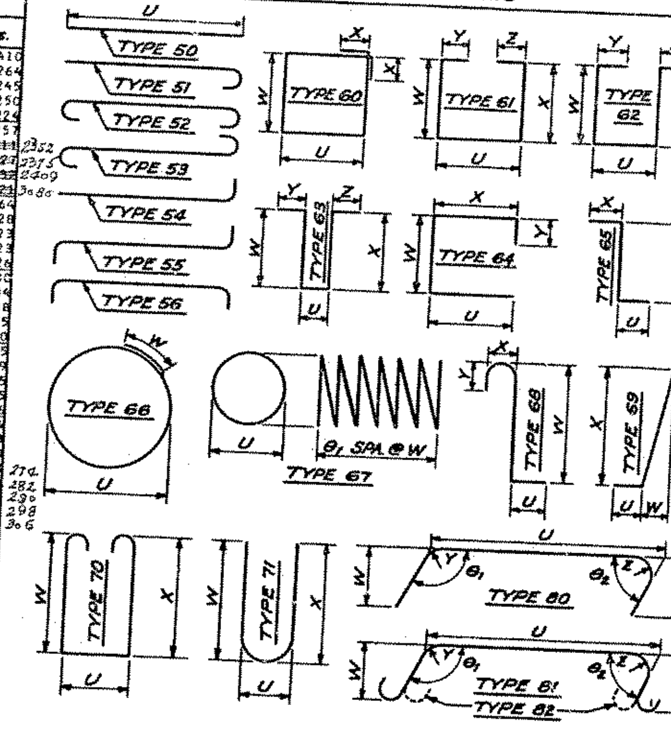

NOTE:
Bends for transverse bars due to roadway crown conditions have not been shown. These bars shall be bent as required to conform to the configuration of the structure.

SR 405 MP 18.87 TO MP 21.83
NE 100TH STREET TO NE 145TH STREET
KING COUNTY
N.P. RY. OVERCROSSING

BAR LIST
EAST BRIDGE

WASHINGTON STATE HIGHWAY COMMISSION
DEPARTMENT OF HIGHWAYS
OLYMPIA, WASHINGTON

APPROVED Feb. 27, 1969
CONTRACT NO. 8615 SHEET 146 OF 169 SHEETS

As Built Changes in Red 10-12-71
SR-405/51
19/2

S = Bar is included in substructure quantities.
F = Bar to be field welded.
T = Tie or Stirrup.
H = A.S.T.M. A-432.
V = Bar dimensions vary between dimensions shown on this line and the following line.

MARK NO.	LOCATION	SIZE	NO. REQ'D.	BEND TYPE	TIE OR STIR.	FLD. WELD	SUBSTR.	A-432	VARIES	NO. EACH	U Ft.	U In.	W Ft.	W In.	X Ft.	X In.	Y Ft.	Y In.	Z Ft.	Z In.	θ1 Deg.	θ2 Deg.	LENGTH Ft.	LENGTH In.	WEIGHT Lbs.
350	GI BOTTOM SPAN ONE	10	4	50							49	0.0											49	0.	843
351	GI BOTTOM SPAN THREE	10	4	50							45	0.0											45	0.	775
352	GI BOTTOM END SPANS	10	4	50							29	0.0											29	0.	499
353	GI BOTTOM END SPANS	10	8	50							36	6.0											36	6.	1256
354	GI BOTTOM END SPANS	10	4	50							16	6.0											16	6.	284
355	GI BOTTOM CENTER SPAN	10	2	50							22	0.0											22	0.	189
356	GI BOTTOM CENTER SPAN	10	2	50							33	0.0											33	0.	284
357	GI BOTTOM CENTER SPAN	10	4	50							43	0.0											43	0.	740
358	GI BOTTOM CENTER SPAN	10	4	50							21	8.0											21	8.	373
400	SLAB TOP TRANSV	5	30	50					V	1	3	9.0											3	9.	
											30	0.0											30	0.	598
401	SLAB BOTTOM TRANSV	5	34	50					V	1	6	3.0											6	3.	
											32	3.0											32	3.	683
402	SLAB TOP TRANSV	5	101	51					V	1	31	8.0											32	3.	
											35	6.0											36	1.	~~3597~~ 3626
403	SLAB BOTTOM TRANSV	5	101	50					V	1	34	3.0											34	3.	
											37	9.0											37	9.	3792
404	SLAB TOP TRANSV	5	169	51					V	1	35	7.0											36	2.	
											40	2.0											40	9.	6779
405	SLAB BOTTOM TRANSV	5	169	50					V	1	38	0.0											38	0.	
											42	6.0											42	6.	~~7099~~ 7128
406	SLAB TOP TRANSV	5	116	51					V	1	40	3.0											40	10.	
											42	3.0											42	10.	~~3061~~ 6072
407	SLAB BOTTOM TRANSV	5	118	50					V	1	42	4.0											42	4.	
											44	6.0											44	6.	~~5252~~ 5271
408	SLAB TOP TRANSV	5	72	51					V	1	44	6.0											45	1.	
											1	6.0											2	1.	1771
409	SLAB TOP TRANSV	5	29	50					V	1	4	8.0											4	8.	
											26	9.0											26	9.	475
410	SLAB BOTTOM TRANSV	5	13	50					V	1	5	6.0											5	6.	
											14	6.0											14	6.	136
411	SLAB TOP TRANSV	5	384	50							28	0.0											28	0.	11214
412	SLAB BOTTOM TRANSV	5	403	69							15	9.0		6.0		6.0		0.0		0.0			16	5.	6916
413	SLAB TOP TRANSV	5	38	50					V	1	28	0.0											28	0.	
											4	9.0											4	9.	649
414	SLAB BOTTOM TRANSV	5	19	69					V	1	5	6.0		6.0		6.0		0.0		0.0			6	2.	
											4	9.0		6.0		6.0		0.0		0.0			5	5.	116
415	SLAB TOP AND BOTTOM TRANSV	5	212	51							3	4.0											3	11.	866
416	SLAB TOP AND BOTTOM TRANSV	5	160	51					V	10	4	10.0											5	5.	
											5	6.0											6	1.	960
417	SLAB TOP AND BOTTOM TRANSV	5	164	51							4	10.0											5	5.	927
418	SLAB TOP AND BOTTOM TRANSV	5	144	51					V	8	4	10.0											5	5.	
											5	6.0											6	1.	864
419	SLAB BOTTOM TRANSV	5	72	50				V	V	1	44	6.0											44	6.	
											1	6.0											1	6.	1727
16A	Pier ½ Column Stirrups	4	230	60	S		S				2	8.0	1	8.0		5.0							9	1.	1395
156A	Column Hoops Pier 2-3	5	16	60	T						2	11.0	2	11.0		6.0							12	1.	212
162	Crosswall Horizontal	5	46	51			S				20	1.0											21	3.	1020
402A	Top Slab Transv. Splice	5	178	50							4	0.0											4	0.	743
403A	Bottom Slab Transv. Splice	5	178	50							4	0.0											4	0.	743
416A	Slab Top & Bottom Transv.	5	102	50							3	0.0											3	0.	313

WEST BRIDGE

MARK NO.	LOCATION	SIZE	NO. REQ'D.	BEND TYPE	TIE OR STIR.	FLD. WELD	SUBSTR.	A-432	VARIES	NO. EACH	U Ft.	U In.	W Ft.	W In.	X Ft.	X In.	Y Ft.	Y In.	Z Ft.	Z In.	θ1 Deg.	θ2 Deg.	LENGTH Ft.	LENGTH In.	WEIGHT Lbs.
20	FTG. LONGIT. PIERS 1/4	5	117	50			S				6	9.0											6	9.	824
21	FTG./WALL TRANSV. PIERS 1	5	80	50			S				39	10.0											39	10.	3324
22	FTG./WALL TRANSV. PIERS 4	5	80	50			S				38	10.0											38	10.	3240
23	WALL TRANSV. PIERS 1/4	5	64	50			S				6	1.0											6	1.	406
24	WALL TRANSV. PIERS 1/4	5	4	63			S				1	2.0	2	11.0	2	1.0		0.0		0.0			5	11.	25
25	WALL TRANSV. PIERS 4	5	4	63			S				1	2.0	2	1.0	1	4.0		0.0		0.0			4	4.	18
26	WALL VERT. PIERS 1/4	6	115	80			S				9	5.0	6	6.0		0.0		6.0		0.0	86	0	15	9.	~~2700~~ 2720
27	WALL DOWELS PIERS 1/4	5	117	80			S				4	6.0	6	6.0		0.0		6.0		0.0	86	0	10	9.	1308
28	WALL VERT PIER 1	5	59	50			S		V	1	20	3.0											20	3.	
											17	7.0											17	7.	1164
29	WALL VERT. PIER 4	5	58	50			S		V	1	20	1.0											20	1.	
											17	8.0											17	8.	1142
30	WALL VERT. PIERS 1/4	7	115	65			S				7	5.0	8	4.0		0.0							15	7.	3663
31	WALL VERT. PIERS 1/4	8	115	65			S				14	5.0	8	4.0		0.0							22	7.	~~6909~~ 6930
32	WALL VERT. PIERS 1/4	5	59	50			S		V	1	20	3.0											20	3.	
											17	7.0											17	7.	1164
33	WALL VERT. PIER 4	5	58	50			S		V	1	20	1.0											20	1.	
											17	8.0											17	8.	1142
34	WALL DOWELS PIERS 1/4	5	117	65			S				4	6.0	8	4.0		0.0							12	9.	1551
40	FTG. LONGIT. PIERS 2/3	8	96	50			S				9	2.0											9	2.	2350
40	FTG. TRANSV. PIERS 2/3	8	96	50			S				9	2.0											9	2.	2350
50	COL. DOWELS PIERS 2/3	8	128	65			S				7	6.0	2	0.0		0.0							9	4.	~~3104~~ 3190
51	COL. W VERT. PIER 2	8	16	50			S				30	5.0											30	5.	1300
51	COL. Y VERT. PIER 3	8	16	50			S				30	5.0											30	5.	1300
52	COL. X VERT. PIER 2	8	16	50			S				31	1.0											31	1.	1328
52	COL. Z VERT. PIER 3	8	16	50			S				31	1.0											31	1.	1328
53	COL. Y VERT. PIER 2	8	16	50			S				31	8.0											31	8.	1355
54	COL. Z VERT. PIER 2	8	16	50			S				32	5.0											32	5.	1385
55	COL. W VERT. PIER 3	8	16	50			S				29	2.0											29	2.	1246
56	COL. X VERT. PIER 3	8	16	50			S				29	9.0											29	9.	1271
57	COL. HOOPS PIERS 2/3	4	248	66			S				2	9.0	2	0.0									10	6.	1741
63	X-BM. HORIZ. BOT. PIERS 2/3	11	8	50			S				59	9.0											59	9.	2540
64	X-BM. HORIZ. BOT. PIERS 2/3	11	8	50			S				46	0.0											46	0.	1955
64	X-BM. HORIZ. BOT. PIERS 2/3	11	8	50			S				26	1.0											26	1.	1109
65	X-BM. HORIZ. SIDES PIERS 2/3	5	16	50			S				37	8.0											37	8.	629
66	X-BM. HORIZ. TOP PIERS 2/3	9	8	50			S				46	6.0											46	6.	1265
67	X-BM. HORIZ. TOP PIERS 2/3	9	24	50			S				37	1.0											37	1.	3026
68	X-BM. HORIZ. TOP PIERS 2/3	10	64	80			S				16	11.0	2	0.0		0.0		9.0		0.0	82	0	18	7.	~~5068~~ 5118
69	X-BM. STIRRUPS PIERS 2/3	5	88	61			S				3	3.0		6.0		6.0		0.0		0.0			4	0.	367
70	X-BM. STIRRUPS PIERS 2/3	5	176	61			S				3	1.5		6.0		6.0		0.0		0.0			3	11.	711
71	X-BM. STIRRUPS PIERS 2-3	5	88	61			S				3	3.0	3	2.0	3	2.0		0.0		0.0			9	4.	857
73	X-BM. VERT. HINGE BARS	11	158	54			S				7	5.0											9	2.	7695
75	COLL. WALL HORIZ. PIERS 2/3	6	48	54							30	9.0											31	8.	2283
76	COLL. WALL HORIZ. PIERS 2/3	5	56	54							30	9.0											31	7.	1842
77	COLL. WALL VERT. PIERS 2&3	4	144	50							11	9.0											11	9.	1130
80	END DIAPH. HORIZ. PIER 1	6	8	50							40	0.0											40	0.	481
81	END DIAPH. HORIZ. PIER 4	6	8	50							39	0.0											39	0.	469
82	END DIAPH. HORIZ. PIER 1	4	27	50							27	3.0											27	3.	491
83	END DIAPH. HORIZ. PIER 4	4	27	50							26	7.0											26	7.	479
84	END DIAPH. VERT. PIERS 1/4	4	124	62								10.0	5	7.0	5	7.0	1	0.0	1	0.0			13	6.	1118

S = Bar is included in substructure quantities.
F = Bar to be field welded.
T = Tie or Stirrup
H = A.S.T.M. A-432.
V = Bar dimensions vary between dimensions shown on this line and the following line.

MARK NO.	LOCATION	SIZE	NO. REQ'D.	BEND TYPE	TIE OR STIR.	FLD. WELD	SUBSTR.	A-432	VARIES	NO. EACH	U Ft.	U In.	W Ft.	W In.	X Ft.	X In.	Y Ft.	Y In.	Z Ft.	Z In.	θ1 Deg.	θ2 Deg.	LENGTH Ft.	LENGTH In.	WEIGHT Lbs.
85	END DIAPH. TIES PIERS 1/4	4	246	61							1	2.0		6.0		6.0		0.0		0.0			1	11.	315
90	INT. DIAPH. HORIZ. BOT.	11	12	50				H			25	9.0											25	9.	1642
91	INT. DIAPH. HORIZ. MIDDLE	4	64	50							7	11.0											7	11.	338
92	INT. DIAPH. HORIZ. MIDDLE	8	12	50							24	11.0											24	11.	798
93	INT. DIAPH. HORIZ. TOP	7	32	50							36	5.0											36	5.	2382
94	INT. DIAPH. STIRRUPS	4	352	71								5.0	3	6.0	3	6.0							7	2.	1686
95	INT. PIER DIAPH. HORIZ.	8	36	50							3	6.0											3	6.	336
96	INT. PIER DIAPH. HORIZ.	5	16	65							40	8.0		6.0		0.0							41	1.	685
97	INT. PIER DIAPH. HORIZ.	5	16	65							32	0.0		6.0		0.0							32	5.	540
98	INT. PIER DIAPH. STIRRUP	4	96	63								6.0	4	8.0	4	8.0		6.0		6.0			10	4.	663
100	RDWY. SLAB LONGIT. PIER 2/3	10	36	50							21	0.0											21	0.	3253
101	RDWY. SLAB LONGIT. PIER 2/3	10	36	50							30	0.0											30	0.	4647
102	RDWY. SLAB LONGIT. PIER 2/3	10	36	50							49	0.0											49	0.	7590
103	RDWY. SLAB LONGIT. PIER 2/3	10	54	50							48	10.0											48	10.	11347
104	RDWY. SLAB LONGIT. ALL SPANS	9	90	50							51	4.0											51	4.	15708
109	RDWY. SLAB LONGIT. SPAN 2	4	18	50							22	0.0											22	0.	265
110	RDWY. SLAB LONGIT. SPAN 2	8	4	50							32	6.0											32	6.	347
111	RDWY. SLAB LONGIT. SPAN 2	4	36	50							25	0.0											25	0.	601
112	RDWY. SLAB LONGIT. SPAN 2	4	32	50							31	0.0											31	0.	663
113	RDWY. SLAB LONGIT. SPAN 1	8	4	50							40	11.0											40	11.	437
114	RDWY. SLAB LONGIT. SPAN 1	4	48	50							27	4.0											27	4.	876
115	RDWY. SLAB LONGIT. SPAN 1	4	54	50							26	4.0											26	4.	950
116	RDWY. SLAB LONGIT. SPAN 1	4	54	50							24	4.0											24	4.	878
117	RDWY. SLAB LONGIT. SPAN 1	4	36	50							29	8.0											29	8.	713
118	RDWY. SLAB LONGIT. SPAN 3	8	4	50							37	8.0											37	8.	402
119	RDWY. SLAB LONGIT. SPAN 3	4	48	50							25	1.0											25	1.	804
120	RDWY. SLAB LONGIT. SPAN 3	4	54	50							24	1.0											24	1.	869
121	RDWY. SLAB LONGIT. SPAN 3	4	36	50							32	2.0											32	2.	774
122	RDWY. SLAB LONGIT. SPAN 3	4	36	50							26	8.0											26	8.	641
123	RDWY. SLAB LONGIT. ALL SPANS	5	462	50							36	5.0											36	5.	17548
124	RDWY. SLAB TRANSV. TOP PIER 1	6	61	51					V	1	37	6.0											38	1.	
											1	6.0											2	1.	~~1840~~ 2095
124	RDWY. SLAB TRANSV. TOP PIER 1	[illegible]	44	51							32	0.0											32	7.	~~1485~~ 2153
124	RDWY. SLAB TRANSV. TOP PIER 1	[illegible]	44	51					V	1	34	0.0											34	7.	
											7	6.0											8	1.	~~979~~ 1114
125	RDWY. SLAB TRANSV. BOT PIER 1	5	52	50					V	1	37	6.0											37	6.	
											1	6.0											1	6.	1058
125	RDWY. SLAB TRANSV. BOT PIER 1	5	38	50							32	0.0											32	0.	1268
125	RDWY. SLAB TRANSV. BOT PIER 1	5	38	50					V	1	34	0.0											34	0.	
											7	6.0											7	6.	822
126	RDWY. SLAB TRANSV. TOP PIER 4	5	56	51					V	1	37	6.0											38	1.	
											1	6.0											2	1.	1173
126	RDWY. SLAB TRANSV. TOP PIER 4	5	40	51							32	0.0											32	7.	1359
126	RDWY. SLAB TRANSV. TOP PIER 4	5	40	51					V	1	34	0.0											34	7.	
											7	6.0											8	1.	890
127	RDWY. SLAB TRANSV. BOT PIER 4	5	50	50					V	1	37	6.0											37	6.	
											1	6.0											1	6.	1017
127	RDWY. SLAB TRANSV BOT PIER 4	5	34	50							32	0.0											32	0.	1135
127	RDWY. SLAB TRANSV BOT PIER 4	5	34	50					V	1	34	0.0											34	0.	
											7	6.0											7	6.	736
128	RDWY. SLAB TRANSV TOP ALL SP	5	485	51							36	8.0											37	3.	18843
129	RDWY. SLAB TRANSV TOP ALL SP	5	485	51							29	6.0											30	1.	15218
130	RDWY. SLAB TRANSV BOT ALL SP	5	574	50							30	6.0											30	6.	18260
130	RDWY. SLAB TRANSV BOT ALL SP	5	287	50							33	1.0											33	1.	9903
131	RDWY. SLAB TO CURB TIES	5	648	69								6.0		4.0	1	3.0		5.5		7.0			2	6.	1705
140	CURB TRANSV.	4	324	65							1	0.0		7.0		0.0							1	6.	316
141	CURB LONGIT.	4	20	50							13	6.0											13	6.	180
141	CURB LONGIT.	4	140	50							15	3.0											15	3.	1426
142	RAIL BASE VERT.	4	324	61							2	2.0		5.0		5.0		0.0		0.0			2	9.	595
143	RAIL BASE VERT.	5	648	65								8.5	2	2.0		8.5							3	4.	2253
144	RAIL BASE LONGIT. TOP	6	8	50							4	7.0											4	7.	55
144	RAIL BASE LONGIT. TOP	6	120	50							7	6.0											7	6.	1352
145	RAIL BASE LONGIT. MIDDLE	4	8	50							4	7.0											4	7.	24
145	RAIL BASE LONGIT. MIDDLE	4	120	50							7	6.0											7	6.	601

DATE	REVISION	BY	APP'D.
12-12-68	Mrks. No. 50 thru 56 ~ Removed Bar List Totals	G.A.R.	WTT

FED. ROAD DIV. NO.	STATE	FED. AID PROJ. NO.	SHEET NO.	TOTAL SHEETS
8	WASH.	I-405-3(308)173	141	163

BENDING DIAGRAMS

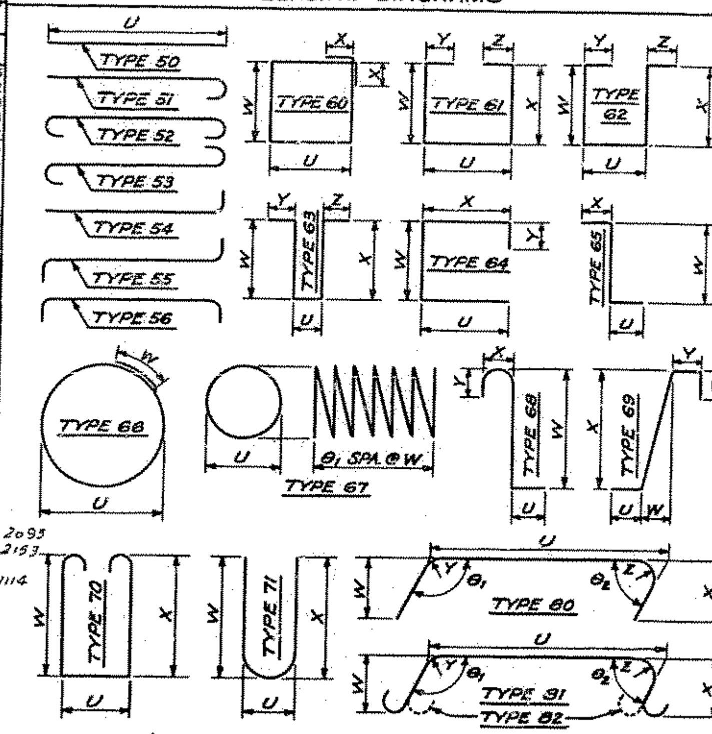

NOTE:
Bends for transverse bars due to roadway crown conditions have not been shown. These bars shall be bent as required to conform to the configuration of the structure.

SR 405 **MP 18.87 TO MP 21.83**
NE 100TH STREET TO NE 145TH STREET
KING COUNTY
N.P. RY. OVERCROSSING

BAR LIST
EAST AND WEST BRIDGE

WASHINGTON STATE HIGHWAY COMMISSION
DEPARTMENT OF HIGHWAYS
OLYMPIA, WASHINGTON

APPROVED Feb. 27, 1969

CONTRACT NO. 8615 SHEET 147 OF 169 SHEETS

As Built Changes in Red 10-12-71

SR-405/51

SR 405-1509-18

19/23

SEC. 28, T26N, R5E, W.M.
CITY OF KIRKLAND

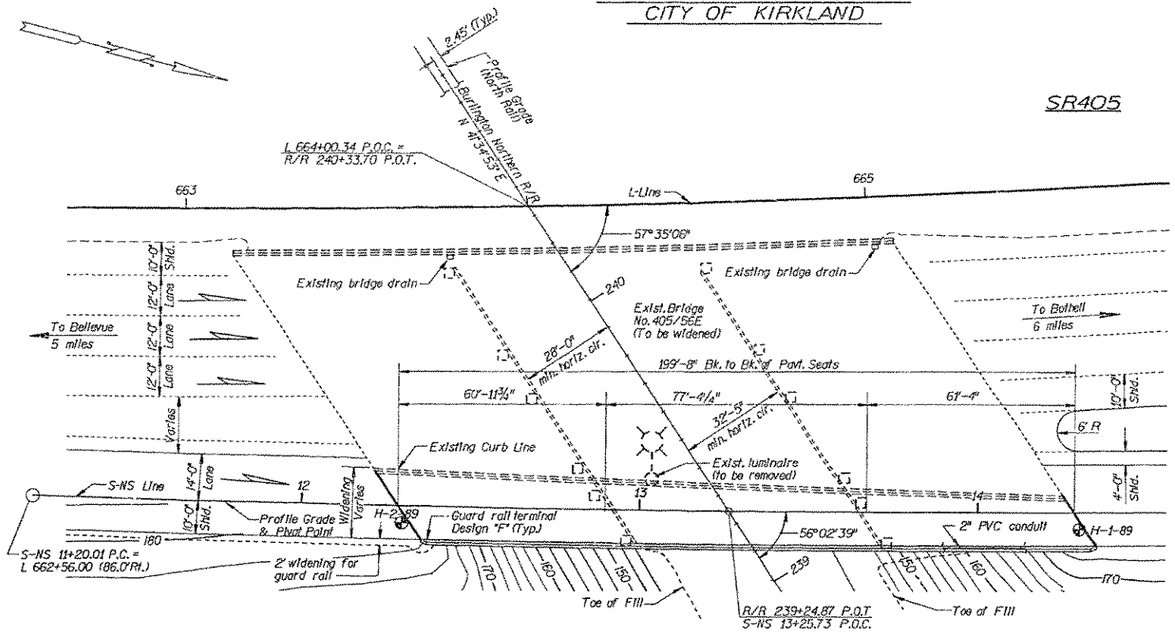

PLAN
Scale: 1" = 20'
Match exist. bearings for all piers
(Approx. bearing = N 41°34'53" E)

CURVE DATA					SPIRAL DATA				
P.I. STATION	DELTA	RADIUS	TANGENT	Lc	C Δ	a	de	Ls	BK. TANGENT
L 657+28.93	27°22'07" LT.	4297.18'	1146.38'	1852.64'	24°42'07"	2/3	1°20'00"	200.00'	N 6°56'10" E
S-NS 13+90.17	4°07'19"	7507.35'	270.17'	540.10'	—	—	—	—	N 12°53'34" W

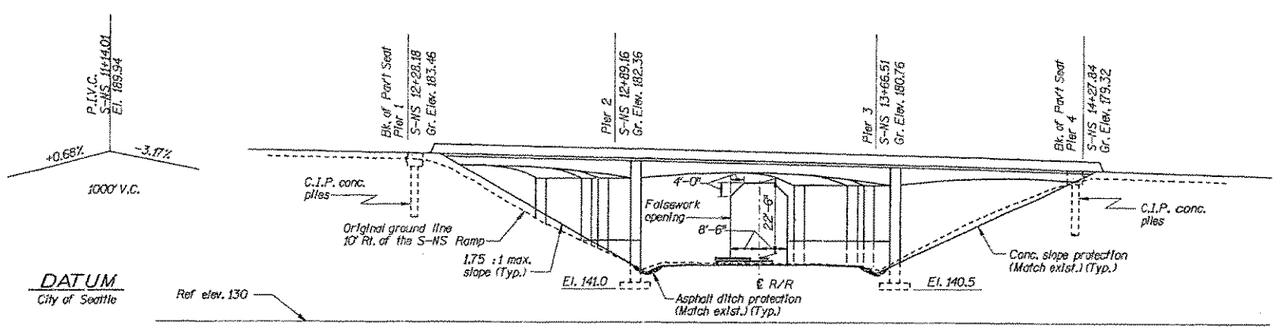

DATUM
City of Seattle

ELEVATION
Grade elevations shown are finish grades at top of asphalt overlay on S-NS line and are equal to the profile grade.
For embankment details, see Std. Plan H-9.

GENERAL NOTES

ALL MATERIAL AND WORKMANSHIP SHALL BE IN ACCORDANCE WITH THE REQUIREMENTS OF THE STATE OF WASHINGTON DEPARTMENT OF TRANSPORTATION STANDARD SPECIFICATIONS FOR ROAD, BRIDGE AND MUNICIPAL CONSTRUCTION DATED 1988.

THIS STRUCTURE HAS BEEN DESIGNED IN ACCORDANCE WITH THE REQUIREMENTS OF THE 1989 AASHTO SPECIFICATIONS. ALL REINFORCED CONCRETE ELEMENTS HAVE BEEN DESIGNED BY SERVICE LOAD DESIGN.

FOOTING ELEVATIONS AND SUBSTRUCTURE DETAILS ARE SUBJECT TO CHANGE DEPENDING UPON FOUNDATION MATERIAL ENCOUNTERED. REINFORCING STEEL FOR THE FOOTINGS AND PIER WALLS SHALL NOT BE CUT UNTIL FINAL FOOTING ELEVATIONS HAVE BEEN DETERMINED IN THE FIELD AND SUBSTRUCTURE DETAILS HAVE BEEN MODIFIED AS REQUIRED.

THE CONCRETE IN THE FOOTINGS OF PIERS 2 AND 3 SHALL BE CLASS "B" MIX. ALL OTHER CAST-IN-PLACE CONCRETE SHALL BE CLASS "AX" MIX.

THE MAXIMUM DESIGN SOIL PRESSURE PER SQUARE FOOT IS TEN (10) TONS FOR PIERS 2 AND 3.

ALL PILES ARE CAST-IN-PLACE CONC. PILES WITH A MINIMUM ALLOWABLE LOAD BEARING CAPACITY OF 70 TONS.

FALSEWORK SHALL BE CAREFULLY RELEASED TO PREVENT IMPACT OR UNDUE STRESSES IN THE STRUCTURE.

UNLESS OTHERWISE SHOWN IN THE PLANS, CONCRETE COVER MEASURED FROM THE FACE OF THE CONCRETE TO THE FACE OF ANY REINFORCEMENT BAR SHALL BE 2" AT THE TOP OF ROADWAY SLAB, 1" AT THE BOTTOM OF THE ROADWAY SLAB AND 1 1/2" AT ALL OTHER LOCATIONS.

LEGEND:

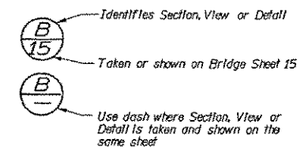

= Epoxy coated rebar

TABLE OF ELEVATIONS
Existing elevations at curb line of Bridge No. 405/56E

WEST CURB LINE		EAST CURB LINE	
LOCATION	ELEVATION	LOCATION	ELEVATION
SW corner		SE corner	
L 663+13.3 (14.0'Rt.)	180.64	L 663+54.6 (77.3'Rt.)	182.95
L 663+23.2 (14.0'Rt.)	180.43	L 663+64.5 (77.9'Rt.)	182.91
L 663+33.2 (14.0'Rt.)	180.27	L 663+74.3 (78.6'Rt.)	182.76
L 663+43.2 (14.0'Rt.)	180.07	L 663+84.2 (79.3'Rt.)	182.62
L 663+53.1 (14.0'Rt.)	179.90	L 663+94.0 (79.9'Rt.)	182.43
L 663+63.1 (14.0'Rt.)	179.71	L 664+03.9 (80.6'Rt.)	182.27
L 663+73.1 (14.0'Rt.)	179.45	L 664+13.7 (81.2'Rt.)	182.07
L 663+83.0 (14.0'Rt.)	179.31	L 664+23.6 (81.9'Rt.)	181.89
L 663+93.0 (14.0'Rt.)	179.11	L 664+33.4 (82.5'Rt.)	181.69
L 664+03.0 (14.0'Rt.)	178.87	L 664+43.3 (83.2'Rt.)	181.46
L 664+13.0 (14.0'Rt.)	178.63	L 664+53.1 (83.8'Rt.)	181.25
L 664+22.9 (14.0'Rt.)	178.42	L 664+63.0 (84.5'Rt.)	181.04
L 664+32.9 (14.0'Rt.)	178.20	L 664+72.8 (85.2'Rt.)	180.82
L 664+42.9 (14.0'Rt.)	177.96	L 664+82.7 (85.8'Rt.)	180.62
L 664+52.8 (14.0'Rt.)	177.74	L 664+92.5 (86.5'Rt.)	180.38
L 664+62.8 (14.0'Rt.)	177.50	L 665+02.4 (87.1'Rt.)	180.07
L 664+72.8 (14.0'Rt.)	177.30	L 665+12.2 (87.8'Rt.)	179.93
L 664+82.7 (14.0'Rt.)	177.09	L 665+22.1 (88.4'Rt.)	179.68
L 664+92.7 (14.0'Rt.)	176.83	L 665+31.9 (89.1'Rt.)	179.43
L 665+02.7 (14.0'Rt.)	176.49	L 665+41.8 (89.8'Rt.)	179.25
L 665+07.7 (14.0'Rt.)	176.26	L 665+51.6 (90.4'Rt.)	179.01
NW corner		L 665+53.57 (90.5'Rt.)	178.80
		NE corner	

R. C. T-BEAM WIDENING

LOADING: HS-20
OR
TWO 24K AXLES @ 4' CTRS.

DATE	REVISION	BY	APP'D
9/8 9	Deleire Illumination		

18-AUG-1989

SR 405 JOB NO. 7018 SHEET 1 of 13

Bridge Design Engr.	12-88		
Supervisor	8-89		
Designed By	7-89		
Checked By	7-89		
Detailed By	12-88		
Bridge Planning Engr.	12-88		
Preliminary Plan By	11-88	2-89	
Architect/Specialist	12-88		

DATE	REVISION	BY	APP'D

REGION NO.	STATE	FED. AID PROJ. NO.	SHEET NO.	TOTAL SHEETS
10	WASH.	IR-405-3(703)		
JOB NUMBER 89W091				
CONTRACT NO 3716				

BRIDGES AND STRUCTURES

9.1.89
APPROVED

1 ZG4:L105,4:TOTEM.DGN:1

Washington State Department of Transportation

SR 405
TOTEM LAKE/NE 124TH STREET INTERCHANGE
BNRR O'XING 405/56E WIDENING

LAYOUT

BRIDGE SHEET NO. 1

SHEET 80 OF 109 SHEETS

DOT FORM 221-013 Revised 11/83

SR 405/130

192/73

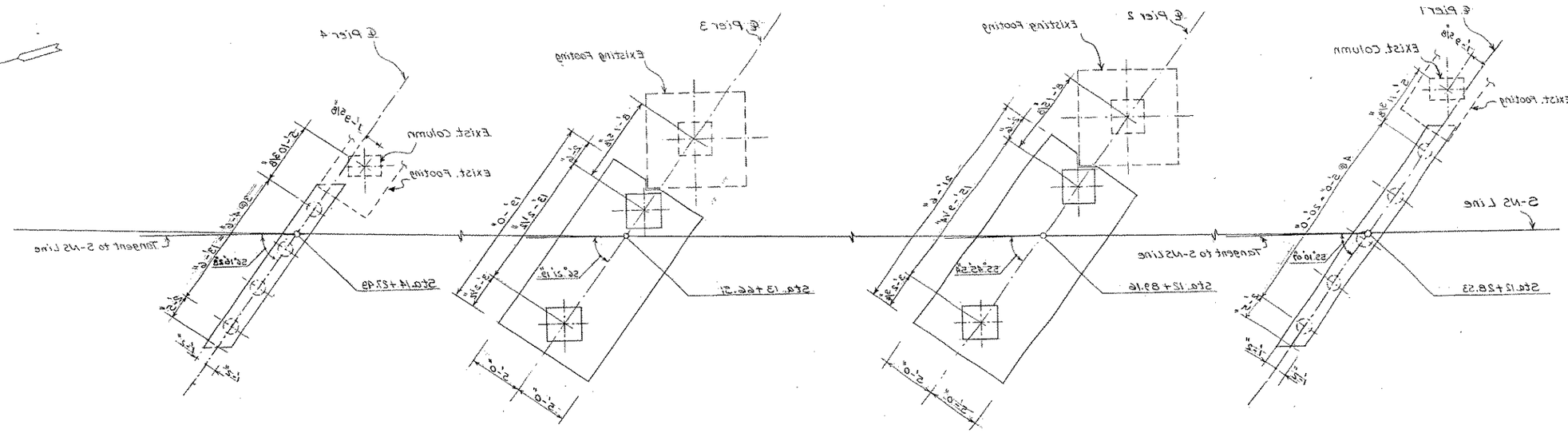

FOOTING PLAN

Scale: 1" = 5'-0"

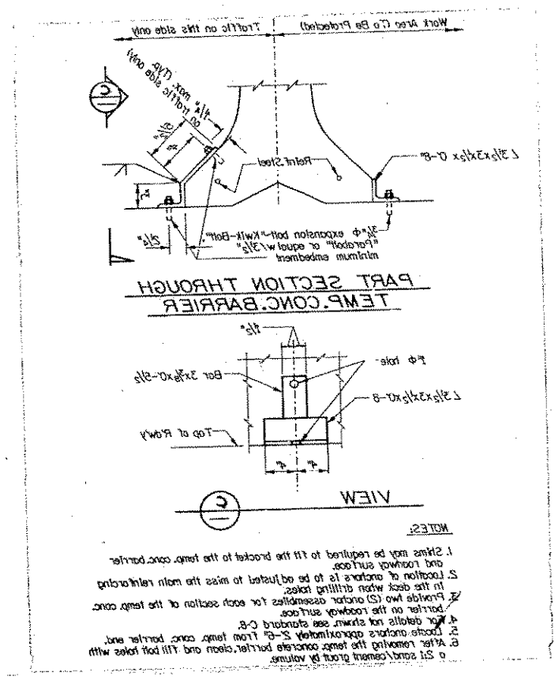

PART SECTION THROUGH TEMP. CONC. BARRIER

NOTES:

1. Shims may be required to fill the bracket to the temp. conc. barrier and roadway surface.
2. Location of anchors is to be adjusted to miss the main reinforcing in the deck when drilling holes.
3. Provide two (2) anchor assemblies for each section of the temp. conc. barrier on the roadway surface.
4. Bar details not shown, see structural C-8.
5. Locate anchors approximately 2'-6" from temp. conc. barrier end.
6. After removing the temp. concrete barrier, clean and fill bolt holes with a 2:1 sand/cement grout by volume.

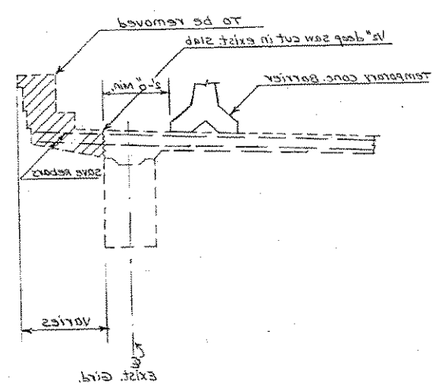

SLAB REMOVAL DETAIL (A)

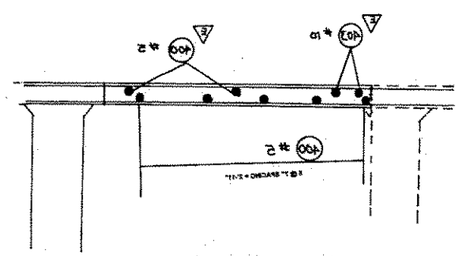

☆CLOSURE POUR REBAR DETAIL

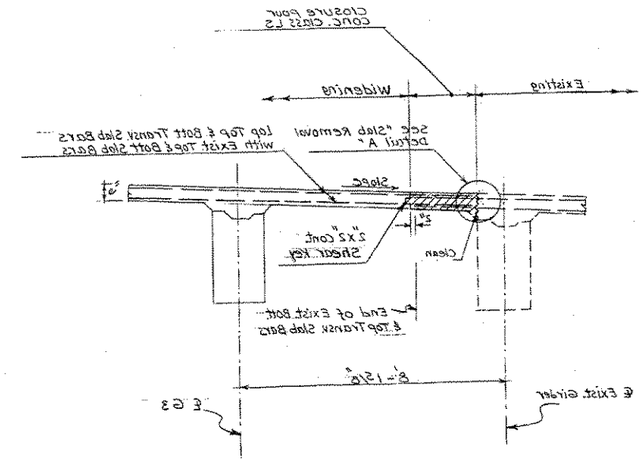

WIDENING DETAIL - SLAB

☆AS BUILT CHANGES NOTED

Bridge Design Engineer: J. Hawkins											
Supervisor:											
Reviewed By:											
Designed By: M. Sherfey 4-89											
Checked By: J. Van Lund 7-89											
Detailed By: M. Sherfey 5-89											
Revised:											
Preliminary Plan By:											
	DATE	REVISION	BY	APP'D	REGION NO.	STATE	FED. AID PROJ. NO.	BRIDGE NO.	TOTAL SHEETS		
					10	WASH	IR-405-3(703)				
					JOB NUMBER 83W091						
					CONTRACT NO.						

DOT FORM 221-013
Revised 8/82

BRIDGES AND STRUCTURES

APPROVED 8-16-89

Washington State Department of Transportation

SR 405
TOTEM LAKE/NE 124TH STREET INTERCHANGE
BNR O'XING 405/SE WIDENING

FOOTING PLAN

BRIDGE SHEET NO. 2

SHEET 81 OF 109 SHEETS

SR 405/130

192/72

PLOT DATE 7-20-89

PLOT TIME 13:

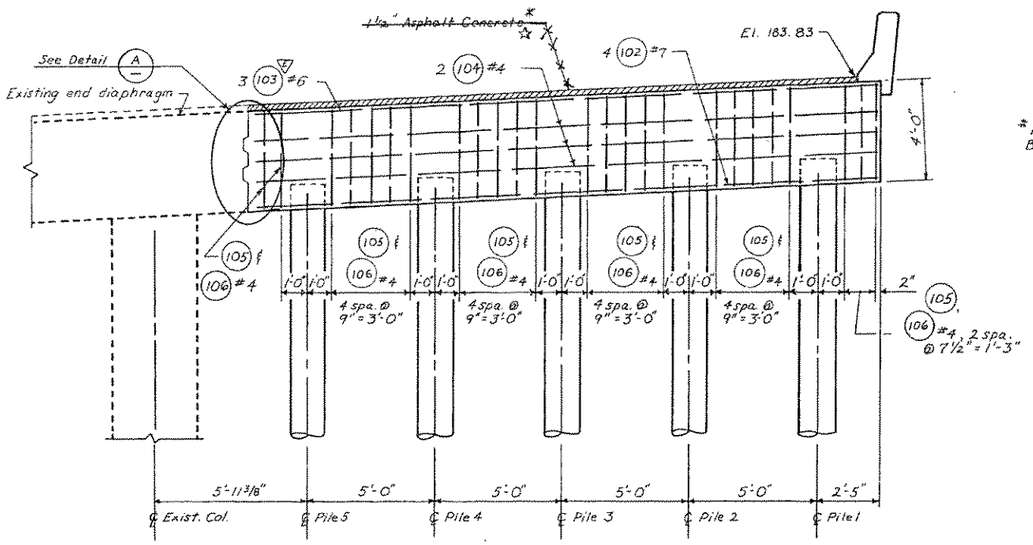

PIER 1
Looking ahead on sta.

* Not included in Bridge Quantities

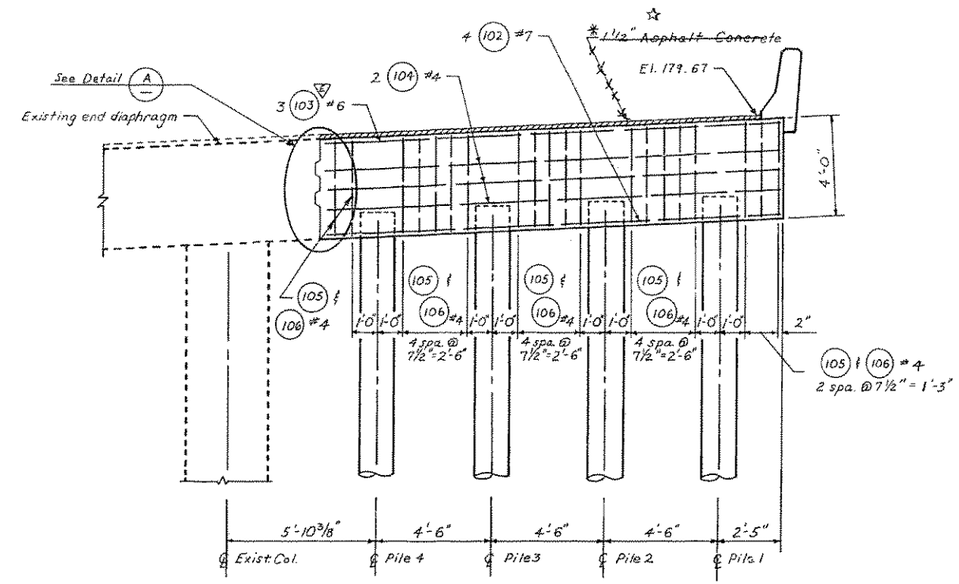

PIER 4
Looking ahead on sta.

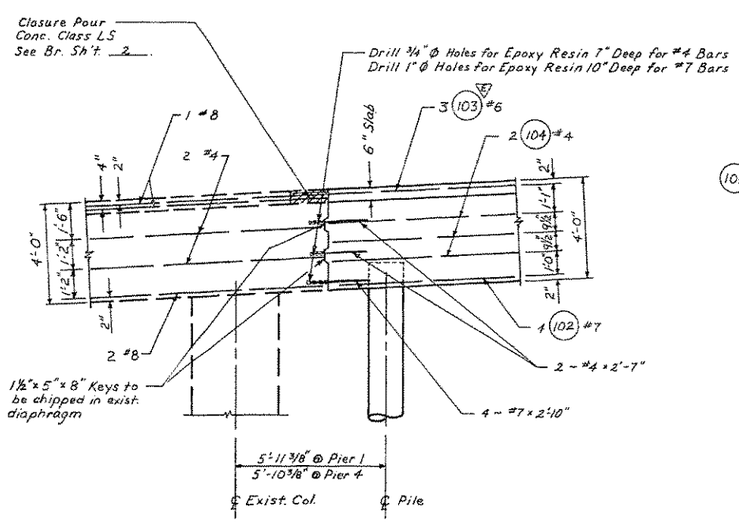

DETAIL A

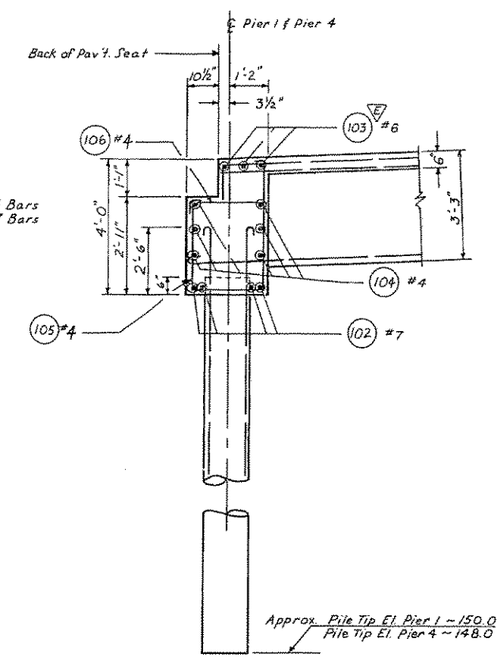

PILE CAP AT PIER 1
PIER 4 SIMILIAR

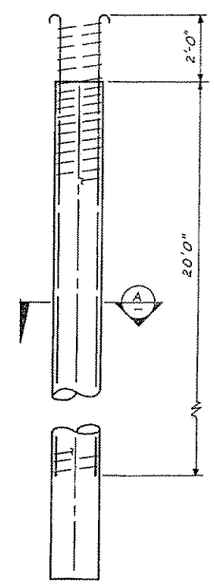

16" C.I.P. CONC. PILE

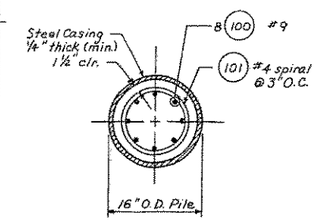

SECTION A

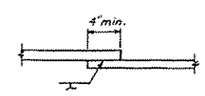

SPIRAL BAR
WELDED SPLICE DETAIL

☆ AS BUILT CHANGES 1/16/96

Bridge Design Engineer	J. Marlwile 8-89					REGION NO.	STATE	FED. AID PROJ. NO.	SHEET NO.	TOTAL SHEETS
Supervisor	Myron Lwin 7-89					10	WASH	IR-405-3(703)		
Reviewed By						JOB NUMBER				
Designed By	M. Sherkat 4-89					89W091				
Checked By	J. Van Lund 7-89					CONTRACT NO.				
Detailed By	P. Snodgrass 5/89					3716				
Architect										
Preliminary Plan By		DATE	REVISION	BY	APP'D					

BRIDGES AND STRUCTURES

9-1-89
APPROVED

Washington State Department of Transportation

SR 405
TOTEM LAKE/NE 124TH STREET INTERCHANGE
BNRR O'XING 405/56E WIDENING

END PIERS 1 & 4

BRIDGE SHEET NO. 3
SHEET 82 OF 109 SHEETS

192/71

SR 405/130

SR 405 JOB NO. 7018 SHEET 3 of 13

DOT FORM 221-013
Revised 9/82

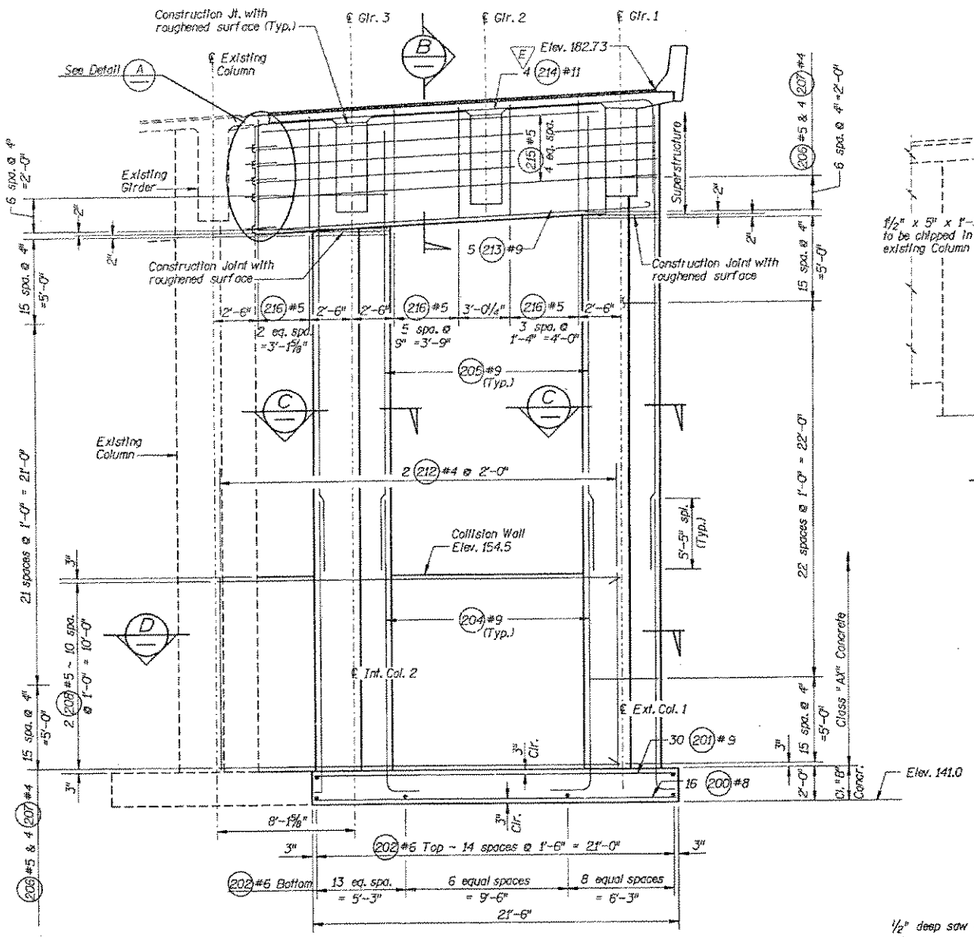

ELEVATION ~ PIER 2

Looking ahead on Stationing normal to skew.

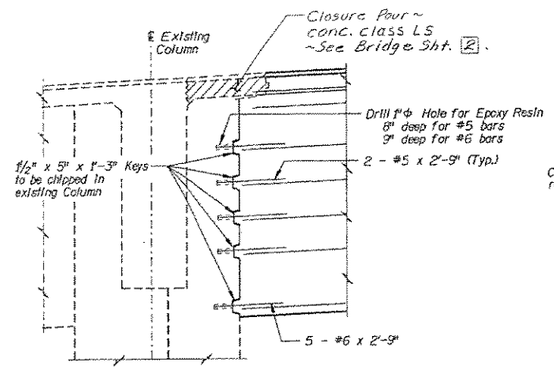

DETAIL A

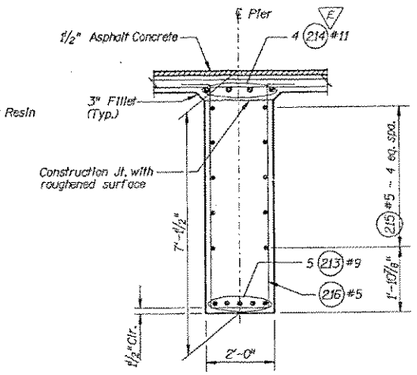

SECTION B

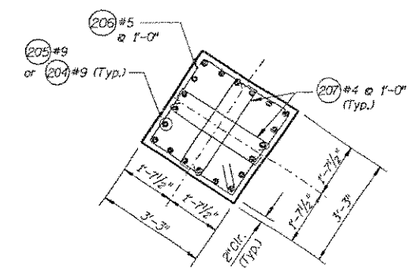

SECTION C

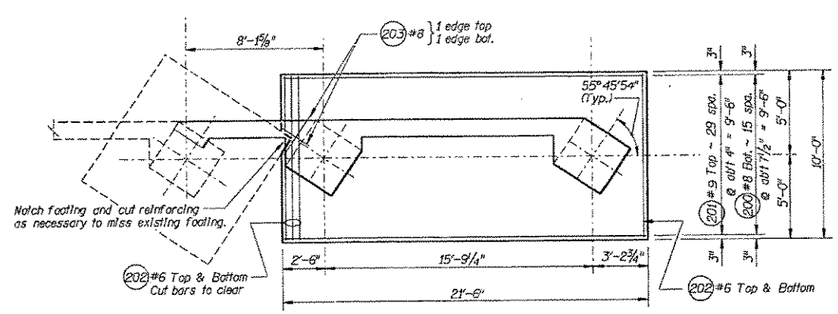

PLAN ~ FOOTING & COLLISION WALL

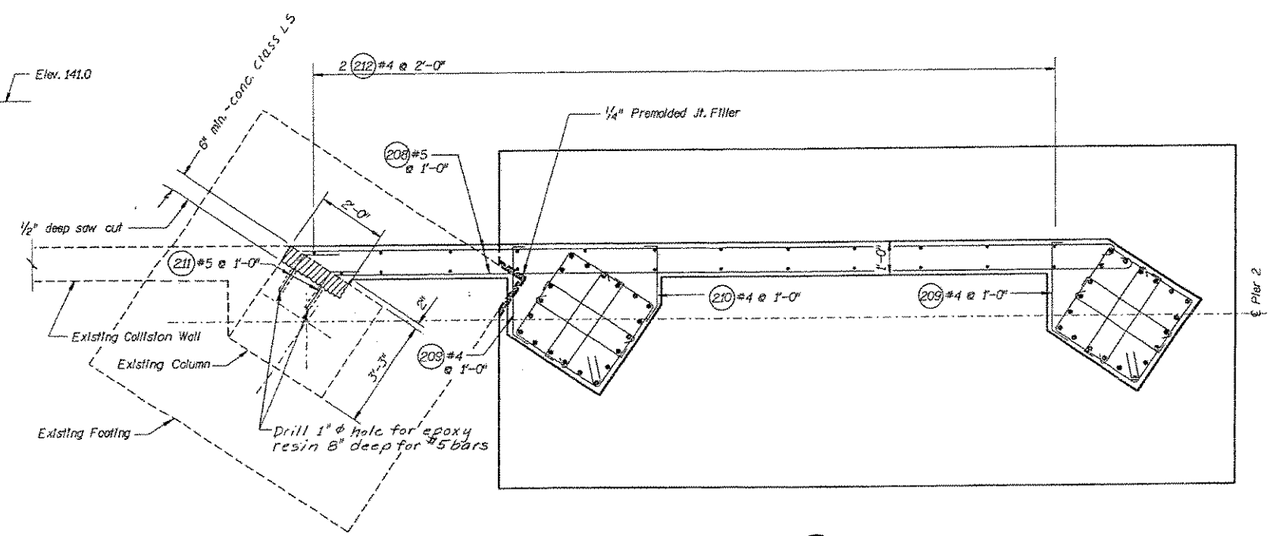

SECTION D

For Column details not shown see SECTION C

Bridge Design Engr. J. Marlock	8-89				
Supervisor Myinthwin	7-89				
Designed By M. Sherkat	4-89				
Checked By J. Van Lund	7-89				
Detailed By D.M. Yates	4/89				
Bridge Planning Engr.					
Preliminary Plan By					
Architect/Specialist		DATE	REVISION	BY	APP'D

REGION NO.	STATE	FED. AID PROJ. NO.	SHEET NO.	TOTAL SHEETS
10	WASH.	IR-405-3(703)		
JOB NUMBER 89W091				
CONTRACT NO 3716				

BRIDGES AND STRUCTURES

9.1.89 APPROVED

2 ZG5:[105.10]TOTEMWID.DGN:2

Washington State Department of Transportation

SR 405
TOTEM LAKE/NE 124TH STREET INTERCHANGE
BNRR O'XING 405/56E WIDENING

PIER 2

BRIDGE SHEET NO. 4

SHEET 83 OF 109 SHEETS

192/70

SR 405 | 130

DOT FORM 221-013 Revised 11/83

SR 405 JOB NO. 7018 SHEET 4 of 13 2FILE:[105.10]TOTEMWID.DGN 6/26/89

18-JUL-1989

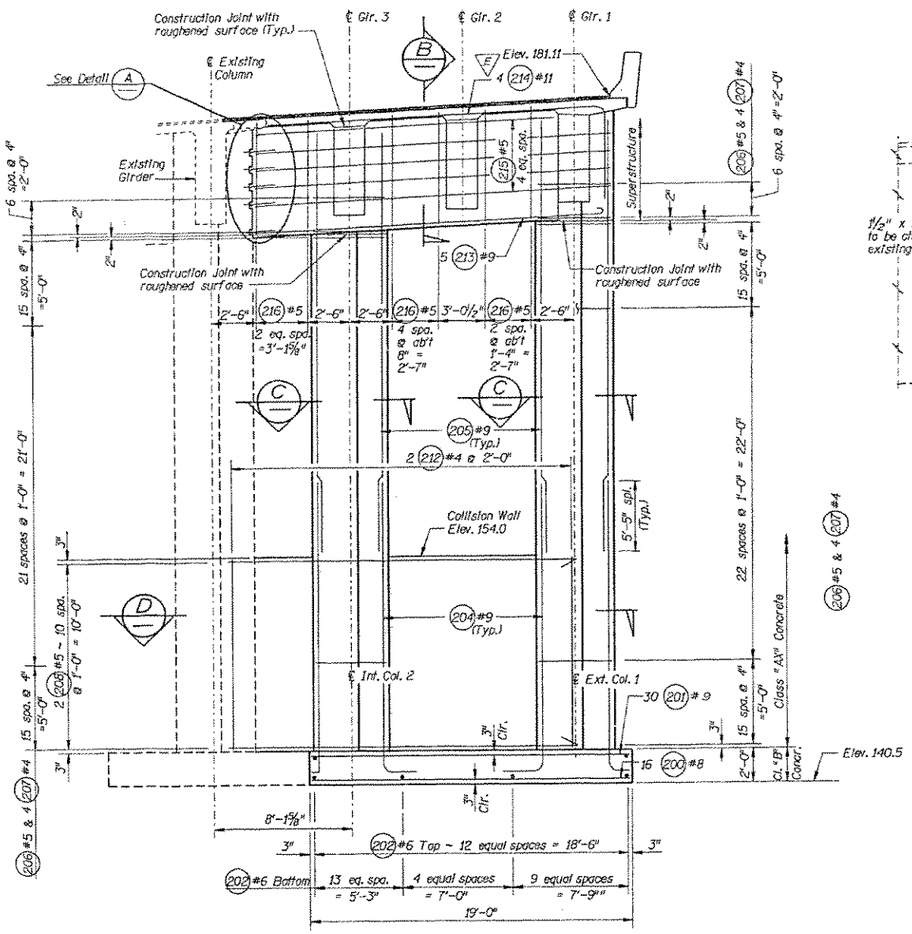

ELEVATION ~ PIER 3

Looking ahead on Stationing normal to skew.

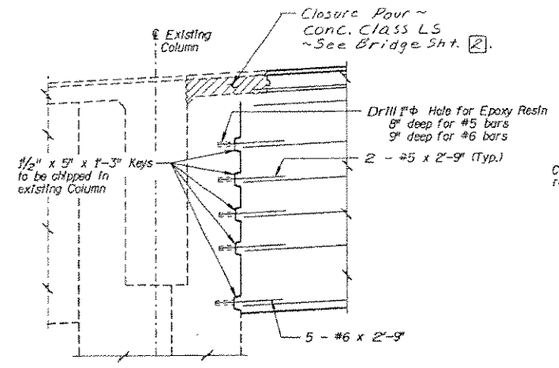

DETAIL A

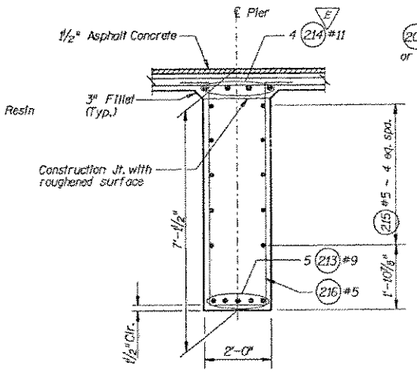

SECTION B

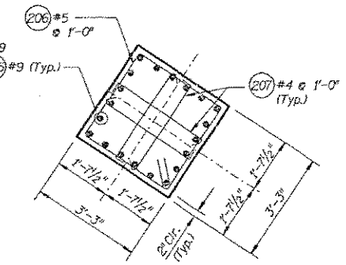

SECTION C

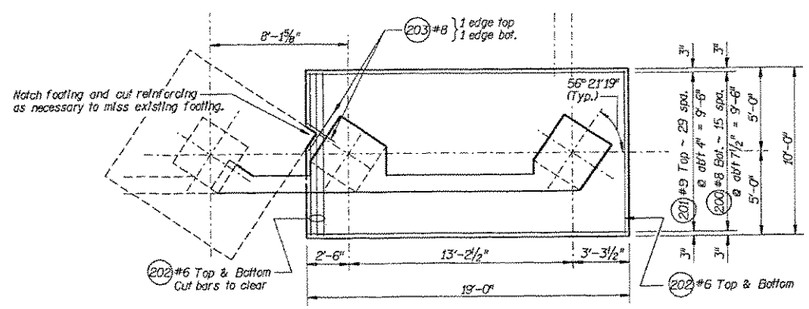

PLAN ~ FOOTING & COLLISION WALL

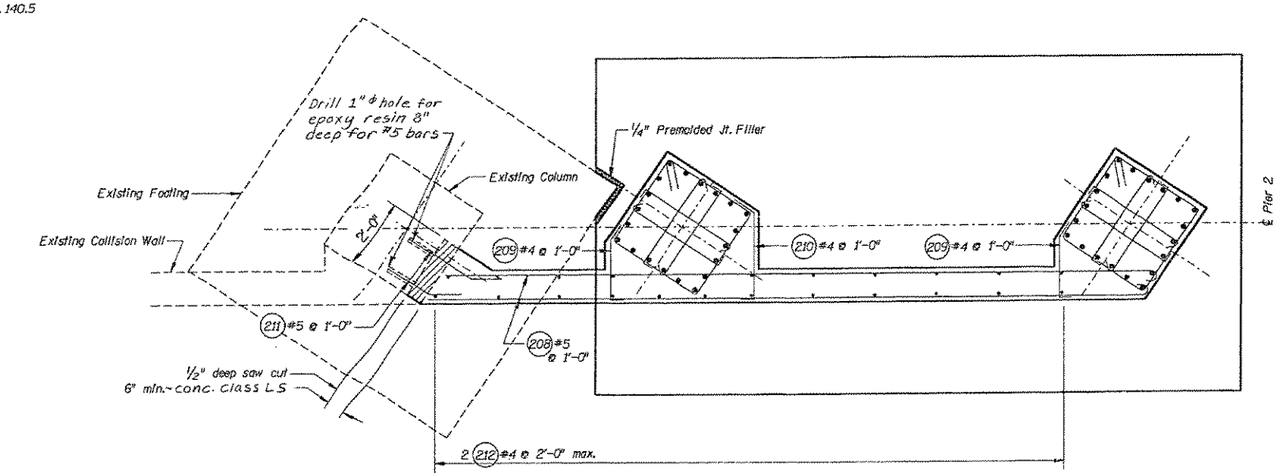

SECTION D

For Column details not shown see SECTION C

Bridge Design Engr.					
Supervisor					
Designed By	M. Sherkat	4-89			
Checked By	J. Van Lund	7-89			
Detailed By	D. M. Yates	5/89			
Bridge Planning Engr.					
Preliminary Plan By					
Architect/Specialist					

DATE	REVISION	BY	APP'D

VERSION NO.	STATE	FED. AID PROJ. NO.	SHEET NO.	TOTAL SHEETS
10	WASH.	IR-405-3(703)		
JOB NUMBER 89W091				
CONTRACT NO 3716				

BRIDGES AND STRUCTURES

9.1.89
APPROVED

3 Z65:[105,10]TOTEMW1D.DGN;2

Washington State Department of Transportation

SR 405
TOTEM LAKE/NE 124TH STREET INTERCHANGE
BNRR O'XING 405/56E WIDENING

PIER 3

BRIDGE SHEET NO. 5

SHEET 84 OF 109 SHEETS

SR 405 | 13D

DOT FORM 221-013 Revised 11/83

SR 405 JOB NO. 7018 SHEET 5 of 13 3FILE:[105,10]TOTEMW1D.DGN 6/26/89 18-JUL-1989

TABLE OF ANGLES				
	A	B	C	D
G1	55°12'40"	55°48'13"	56°23'35"	56°18'54"
G2	55°10'21"	55°46'11"	56°21'55"	56°17'28"
G3	55°08'01"	55°44'03"	56°20'14"	56°16'02"

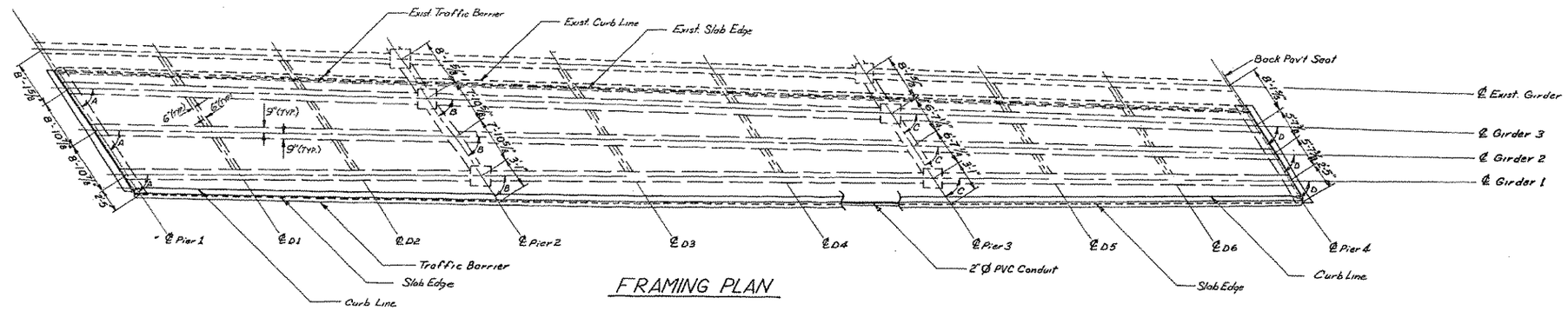

FRAMING PLAN

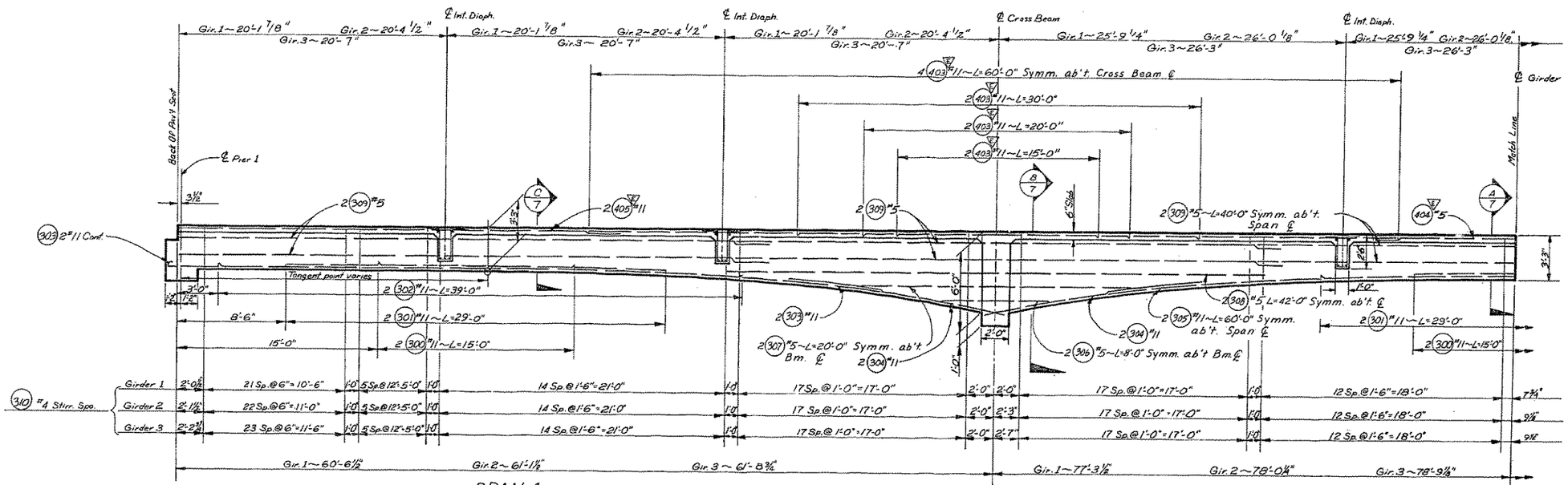

SPAN 1 SPAN 2

GIRDER ½ SECTION

Bridge Design Engineer	4. Matuch 8-89
Supervisor	Myerthwin 7-89
Reviewed By	
Designed By	M. Sherkat 4-89
Checked By	J. Van Lund 7-89
Detailed By	S. Soper 5-89
Architect	
Preliminary Plan By	

DATE	REVISION	BY	APP'D

REGION NO.	STATE	FED. AID PROJ. NO.	SHEET NO.	TOTAL SHEETS
10	WASH	IR-405-3(703)		
JOB NUMBER 89W091				
CONTRACT NO. 3716				

BRIDGES AND STRUCTURES

9.1.89

9.1.89
APPROVED

Washington State Department of Transportation

SR 405
TOTEM LAKE/NE 124TH STREET INTERCHANGE
BNRR O'XING 405/56E WIDENING

FRAMING PLAN/GIRDER ½ SECT.

BRIDGE SHEET NO. 6

SHEET 85 OF 109 SHEETS

194/68

DOT FORM 221-013
Revised 9/82

SR 405 | 130

SR 405 JOB NO. 7018 SHEET 6 OF 13

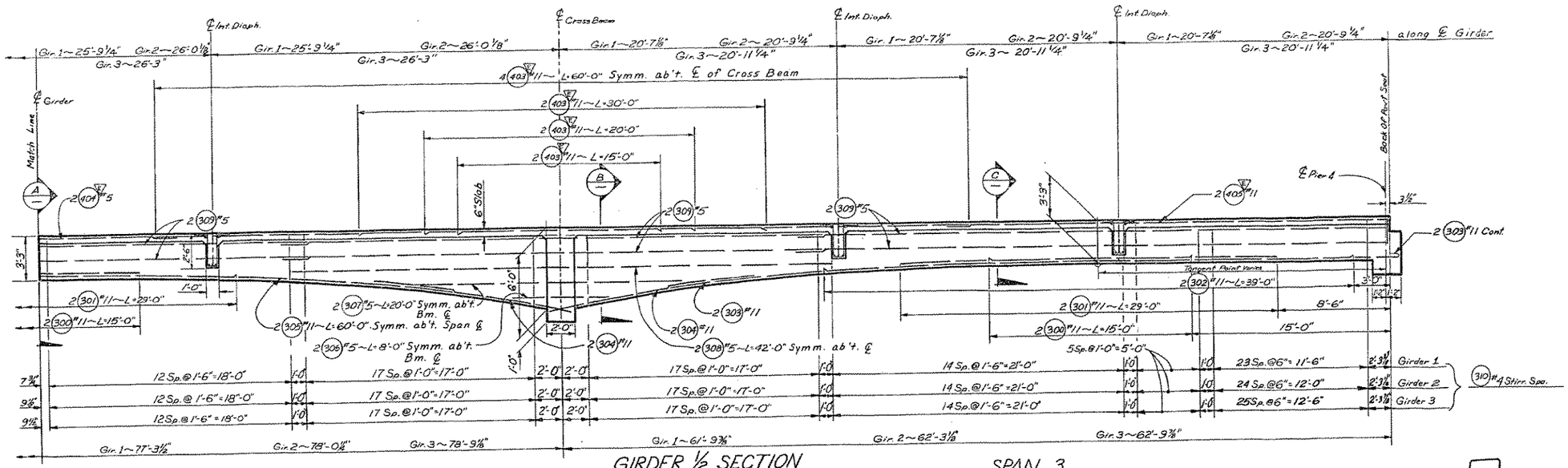

SPAN 2

GIRDER ½ SECTION
ACTUAL SLOPE: 3.17%

SPAN 3

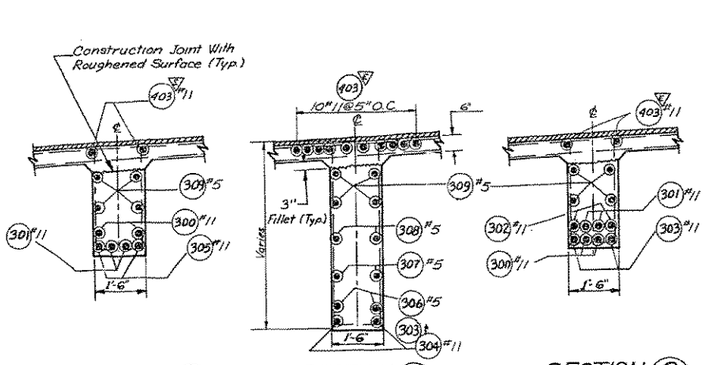

SECTION (A)

SECTION (B)

SECTION (C)

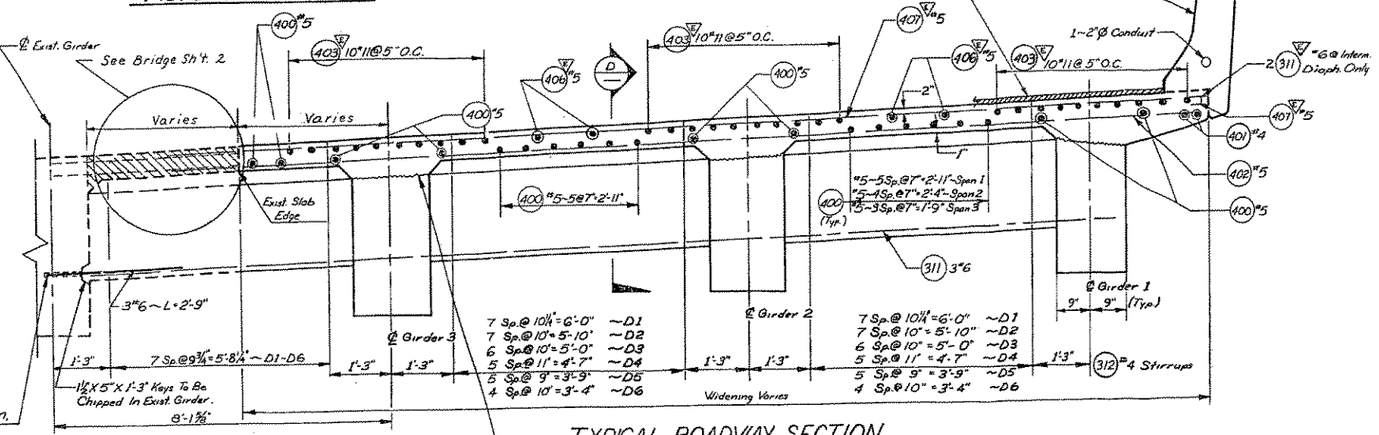

TYPICAL ROADWAY SECTION

Note: The working line between working points (W.P.) is a straight line. The tabulated values shall be measured from the working lines. The values shown do not include the take-up anticipated in the falsework.

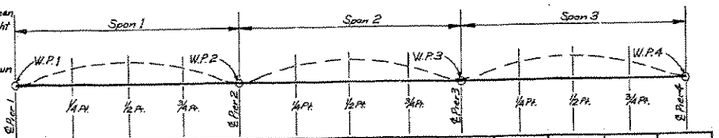

Dead load deflection	0	−¼"	−¼"	−⅛"	0	−⅛"	−¼"	−⅛"	0	−⅛"	−¼"	−¼"	0
Vertical curve correction	0	+⅛"	+¼"	+⅛"	0	+¼"	+3/16"	+¼"	0	+⅛"	+¼"	+⅛"	0
Total camber required	0	+3/16"	+½"	+¼"	0	+3/16"	+5/16"	+3/16"	0	+¼"	+½"	+3/16"	0

SCREED CAMBER

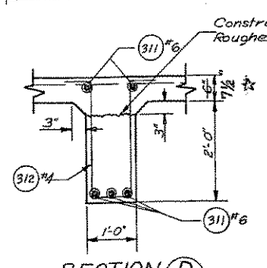

SECTION (D)

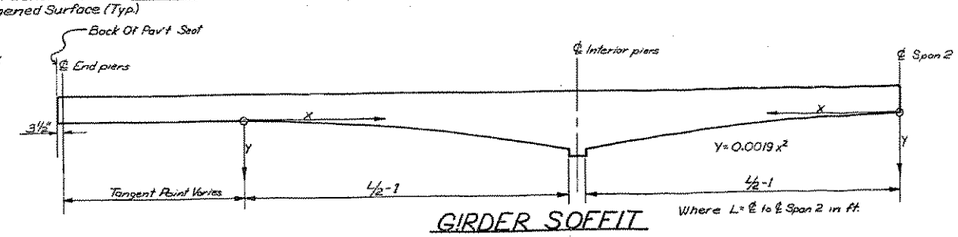

GIRDER SOFFIT

☆AS BUILT CHANGES 1/18/96

Bridge Design Engineer	J. Dietrich	8-89			REGION NO.	STATE	FED. AID PROJ. NO.	SHEET NO. / TOTAL SHEETS
Supervisor	Myn Lum	7-89			10	WASH	IR-405-3(703)	
Reviewed By					JOB NUMBER 89W091			
Designed By	M. Sherkat	4-89			CONTRACT NO. 3716			
Checked By	J. Van Lund	7-89						
Detailed By	S. SOPER	5-89						
Architect								
Preliminary Plan By			DATE	REVISION	BY	APP'D		

DOT FORM 221-013 Revised 8/82

BRIDGES AND STRUCTURES

9-17-89
APPROVED

Washington State Department of Transportation

SR 405
TOTEM LAKE/NE 124TH STREET INTERCHANGE
BNRR O'XING 405/56E WIDENING

GIRDER ½ SECTION / MISC. DETAILS

BRIDGE SHEET NO. 7

SHEET 86 OF 109 SHEETS

19467

SR 405/130

SR 405 JOB NO. 7018 SHEET 7 of 13

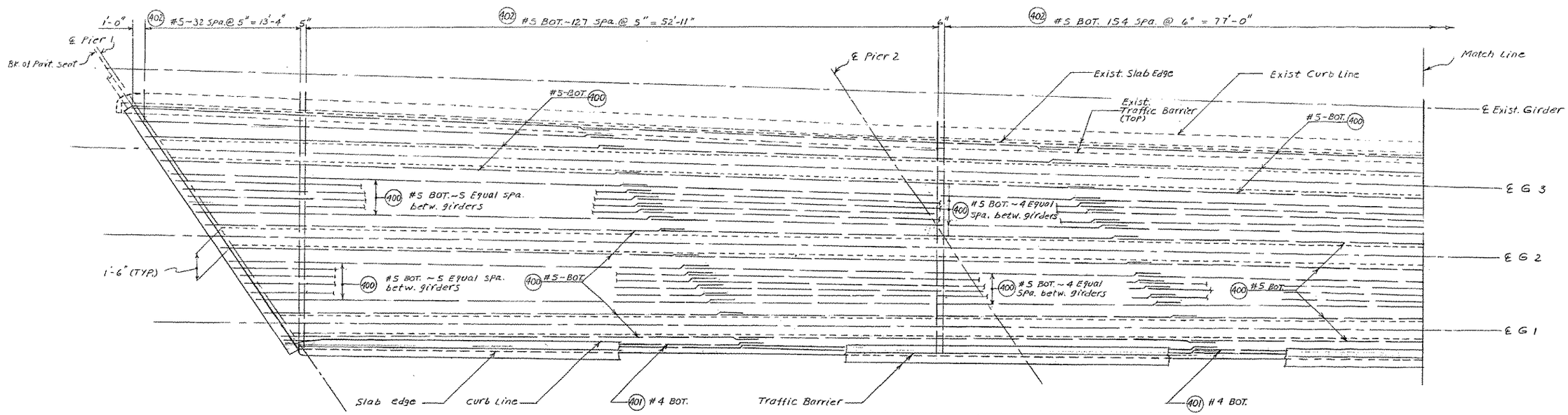

ROADWAY SLAB PLAN ~ BOTTOM BARS

Scale: 1" = 4'-0"

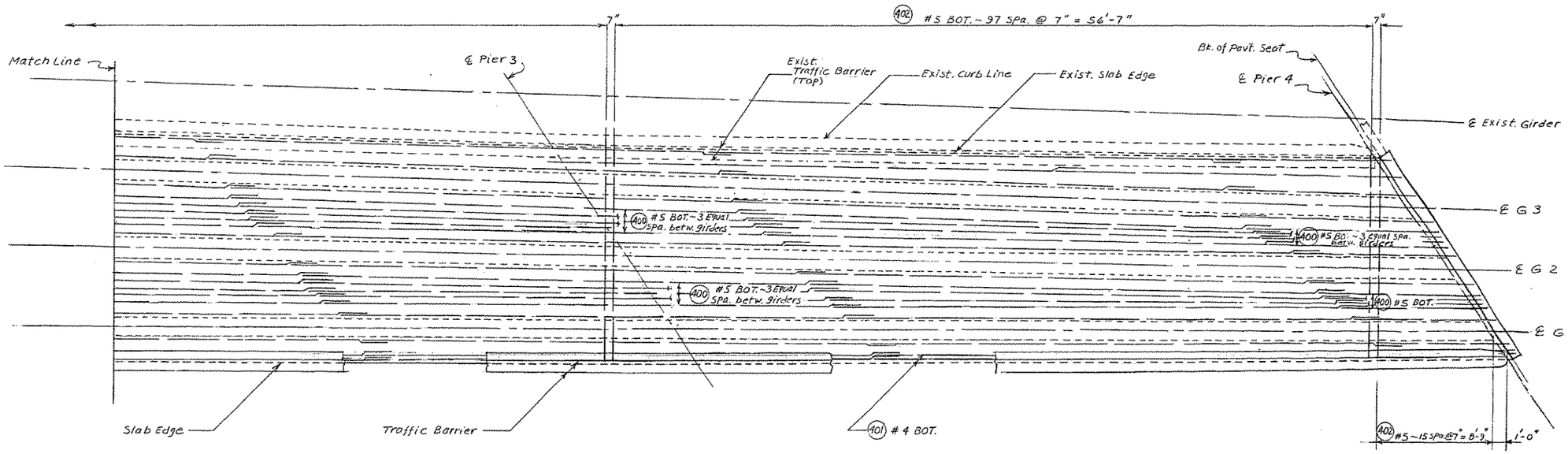

ROADWAY SLAB PLAN ~ BOTTOM BARS

Bridge Design Engineer	J. Markuck 8-89				REGION NO.	STATE	FED. AID PROJ. NO.	SHEET NO.	TOTAL SHEETS
Supervisor	Myunkwin 7-89				10	WASH	IR-405-3(703)		
Reviewed By									
Designed By	M. Sherkat 4-89				JOB NUMBER				
Checked By	J. Van Lund 7-89				89W091				
Detailed By	M. Sherkat 5-89				CONTRACT NO.				
Architect									
Preliminary Plan By		DATE	REVISION	BY	APP'D	3716			

BRIDGES AND STRUCTURES

9-1-89
APPROVED

Allan H. Waller

Washington State Department of Transportation

SR 405
TOTEM LAKE/NE 124TH STREET INTERCHANGE
BNRR O'XING 405/56E WIDENING

ROADWAY SLAB~ BOTTOM BARS

BRIDGE SHEET NO. 8

SHEET 87 OF 109 SHEETS

SR 405 JOB NO. 7018 SHEET 8 of 13

DOT FORM 221-013
Revised 9/82

SR 405/130

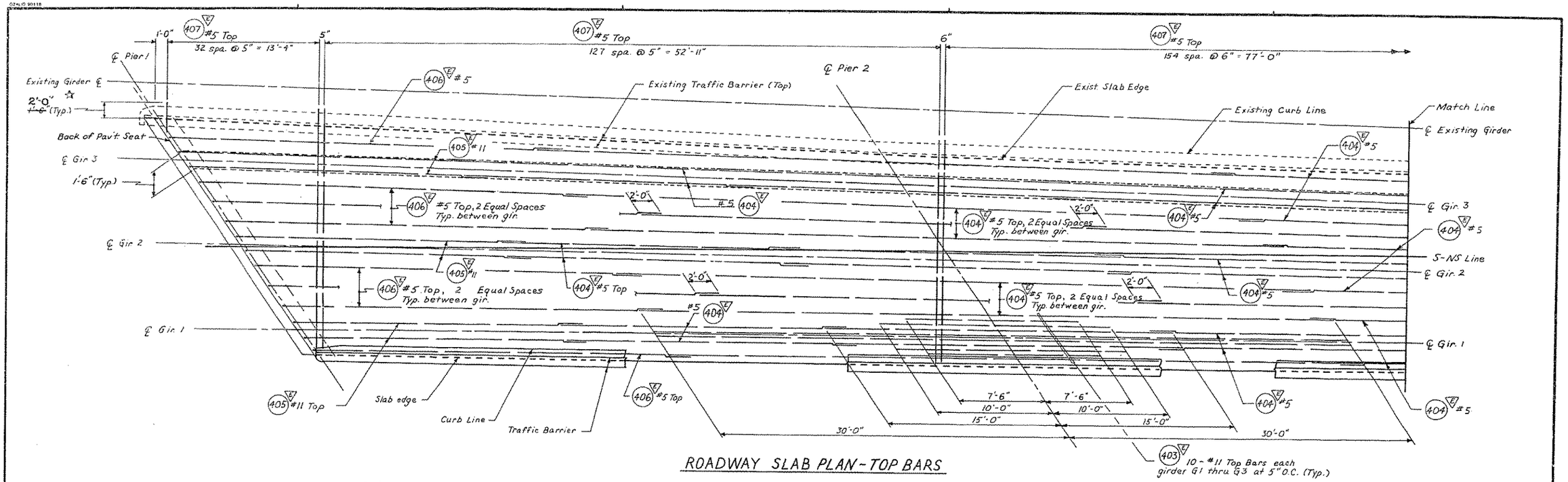

ROADWAY SLAB PLAN - TOP BARS

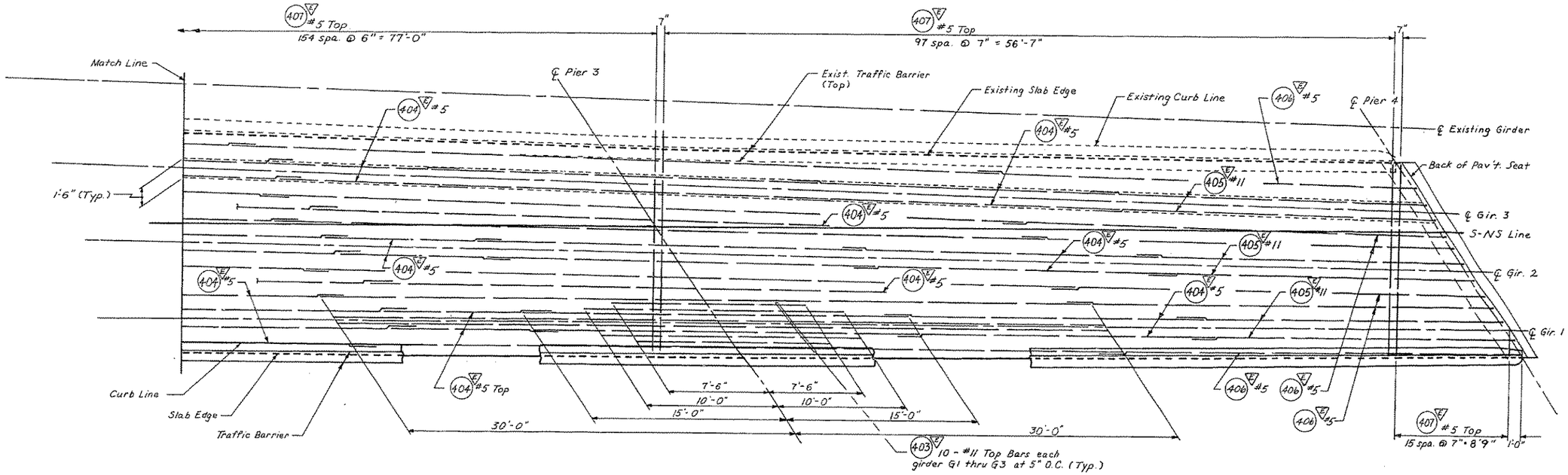

ROADWAY SLAB PLAN ~ TOP BARS

☆AS BUILT CHANGES 1/18/95

Bridge Design Engineer	A. Marlucik	8-89			
Supervisor	Myin Hwin	7-89			
Reviewed By					
Designed By	M. Sherkat	4-89			
Checked By	J. Van Lund	7-89			
Detailed By	P. Snodgrass	5/89			
Architect					
Preliminary Plan By					

DATE	REVISION	BY	APP'D

REGION NO.	STATE	FED. AID PROJ. NO.	SHEET NO.	TOTAL SHEETS
10	WASH	IR-405-3(703)		

JOB NUMBER 89W091

CONTRACT NO. 3716

BRIDGES AND STRUCTURES

9-1-89

9-1-89 APPROVED

Allan H. Walley

Washington State Department of Transportation

SR 405
TOTEM LAKE/NE 124TH STREET INTERCHANGE
BNRR O'XING 405/56E WIDENING

ROADWAY SLAB ~ TOP BARS

BRIDGE SHEET NO. 9

SHEET 88 OF 109 SHEETS

192/65

SR 405 JOB NO. 7018 SHEET 9 of 13

DOT FORM 221-013 Revised 9/82

SR 405/130

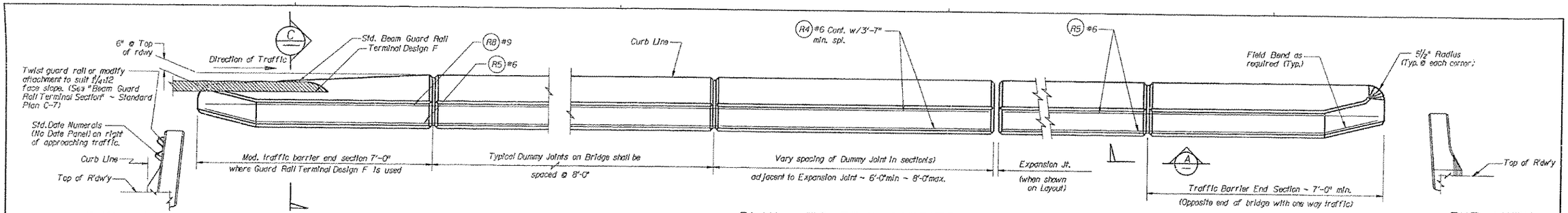

END VIEW

PLAN ~ TRAFFIC BARRIER

Barrier continuous between roadway expan. joints. Construction joints with shear keys are permissible at Dummy Joint locations. Form Joints between Dummy Joints shall not be permitted.

END VIEW

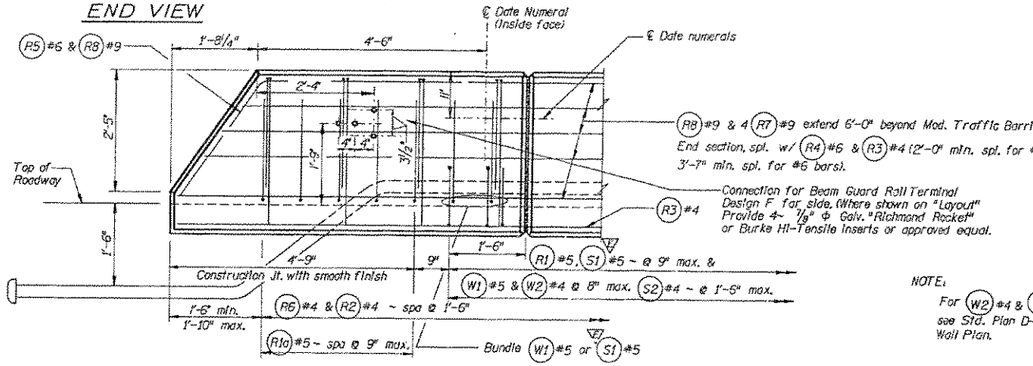

OUTSIDE ELEVATION
END OF MODIFIED TRAFFIC BARRIER
FOR DESIGN F GUARD RAIL ANCHORAGE

NOTE:
For (W2) #4 & (W1) #5 details see Std. Plan D-2e or Wing Wall Plan.

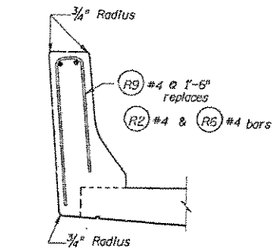

SLIPFORM ALTERNATE

See "Typical Section ~ Traffic Barrier" for additional details.

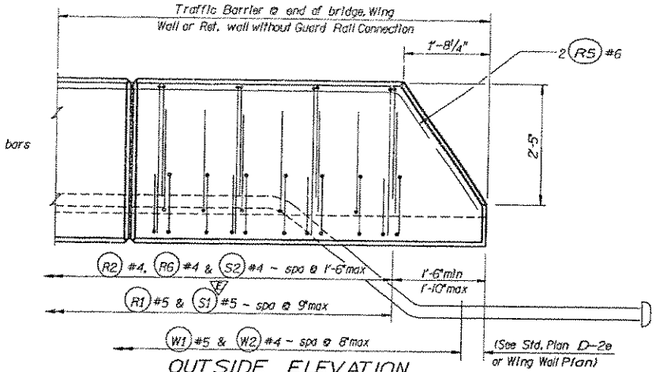

OUTSIDE ELEVATION
END OF TRAFFIC BARRIER

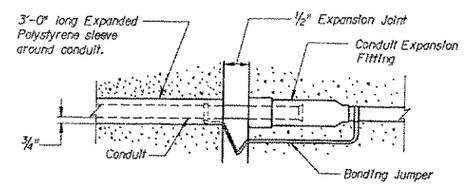

CONDUIT EXPANSION FITTING ~ TYPE 2

Conduit Fitting ~ O-Z Type AX or equal for movement of ±2" max.

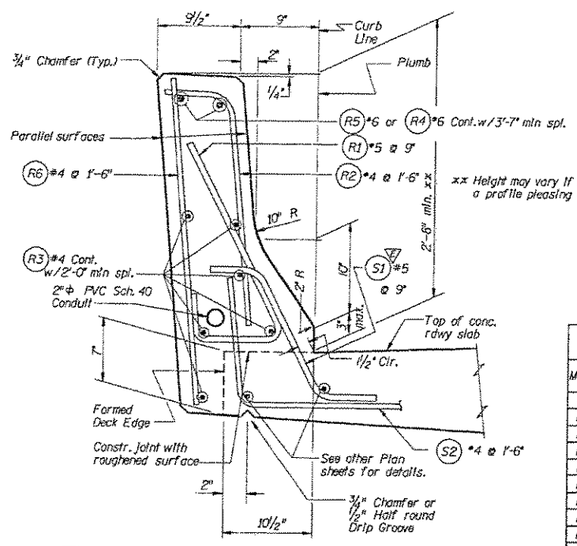

TYPICAL SECTION ~ TRAFFIC BARRIER

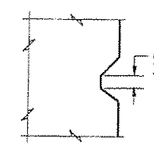

SECTION 2-2

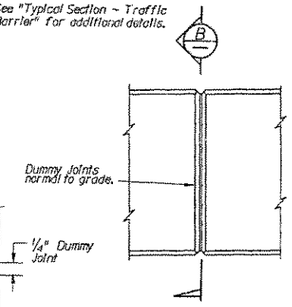

VIEW (A)

All Chamfers 3/4".

NOTE: See "Layout" for applicable surface finish.

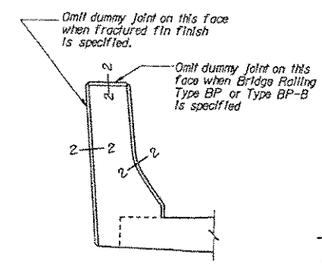

SECTION (B)

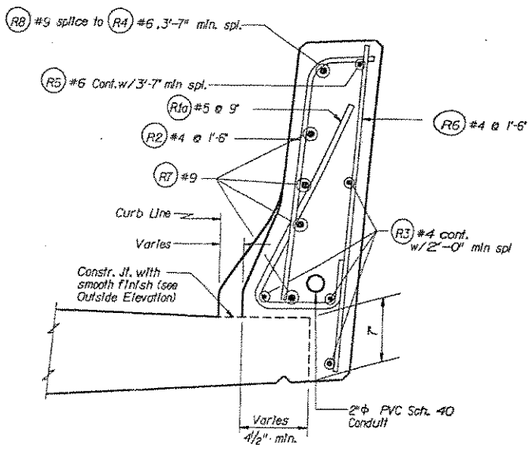

BRIDGE (C) SECTION

Detail for Bridge
For details not shown see "Outside Elevation" above and "Typical Section ~ Traffic Barrier"

TRAFFIC BARRIER BAR LIST

All reinforcing shall be AASHTO M 31, Gr. 60.

MARK	SIZE	LENGTH	BENDING DIAGRAM (All dimensions are out to out)
R1	5	3'-1"	
R1a	5	(a)	
R2	4	2'-9"	
R3	4	(a)	Str.
R4	6	(a)	Str.
R5	6	(a)	
R6	4	2'-11"	Str.
R7	9	(a)	Str.
R8	9	(a)	
R9	4	5'-6"	
≠R10	3	1'-5"	Str.
≠R11	3	4'-0"	Str.

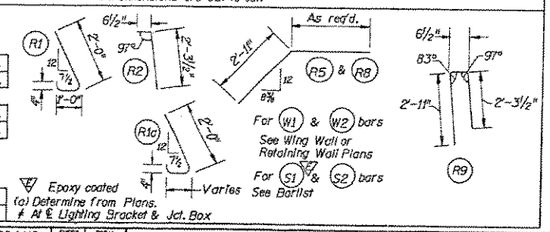

Epoxy coated
(a) Determine from Plans.
≠ At E Lighting Bracket & Jct. Box

For (W1) & (W2) bars See Wing Wall or Retaining Wall Plans
For (S1) & (S2) bars See Barlist

Bridge Design Engr.	A. Mardirosian	8-89		
Supervisor	Myron Lorin	7-89		
Designed By	M. Sherkat	4-89		
Checked By	J. Van Wind	7-89		
Detailed By	D.M. Yates	5/89		
Bridge Planning Engr.				
Preliminary Plan By				
Architect/Specialist				

DATE	REVISION	BY	APP'D

DOT FORM 221-013 Revised 11/83

REGION NO.	STATE	FED. AID PROJ. NO.	SHEET NO.	TOTAL SHEETS
10	WASH.	IR-405-3(703)		

JOB NUMBER 89W091
CONTRACT NO 3716

BRIDGES AND STRUCTURES

9/13/88
APPROVED

1 ZG5:L105,10,TOTEMW1D.DGN:2

Washington State Department of Transportation

SR 405
TOTEM LAKE/NE 124TH STREET INTERCHANGE
BNRR O'XING 405/56E WIDENING

TRAFFIC BARRIER

09/13/88

BRIDGE SHEET NO. 10

SHEET 89 OF 109 SHEETS

(Sheet 90 not used)
SR 405/130

197/64

SR 405 JOB NO. 7018 SHEET 10 of 13 IF:\LE:L105,10\TOTEMW1D .DGN 6/28/89 18-JUL-1989

S - Bar is included in substructure quantities.
F - Bar to be field welded.
T - Tie or Stirrup.
E - Bar is to be epoxy coated.
V - Bar dimensions vary between dimensions shown on this line and the following line.

MARK NO.	LOCATION	SIZE	NO. REQ'D.	BEND TYPE	TIE OR STIR.	FLD.WELD	SUBSTR.	EPOXY COAT.	VARIES	NO.EACH	U Ft.	U In.	W Ft.	W In.	X Ft.	X In.	Y Ft.	Y In.	Z Ft.	Z In.	θ1 Deg.	θ2 Deg.	LENGTH Ft.	LENGTH In.	WEIGHT Lbs.
	PIER 1																								
100	PILE VERTICAL REINF	9	40	51			S				22	0.0											23	3.	3162
101	PILE SPIRAL REINF	4	5	67			S				1	1.0		3.0							88		288	10.	955
102	PILE CAP BOT LONG REIN	7	4	50			S				24	9.0											24	9.	202
103	PILE CAP TOP LONG REIN	6	3	50			S	E			24	9.0											24	9.	112
104	PILE CAP SIDE LONG REINF	4	6	50			S				24	9.0											24	9.	99
105	PILE CAP STIRRUPS REINF	4	25	61			S				2	1.0	2	7.0	3	8.0		3.0		3.0			8	4.	139
106	PILE CAP STIRRUPS REINF	4	25	61			S				2	1.0		3.0		3.0		0.0		0.0			2	4.	39
106	PILE CAP STIRR REINF SKEW	4	2	61			S				2	3.0	2	7.0	3	8.0		3.0		3.0			8	6.	11
106	PILE CAP STIRR REINF SHORT	4	2	61			S					11.0	2	7.0	3	8.0		3.0		3.0			7	2.	10
106	PILE CAP STIRR REINF SKEW	4	2	61			S				2	3.0		3.0		3.0		0.0		0.0			2	6.	3
106	PILE CAP STIR SHORT AT END	4	2	61			S					11.0		3.0		3.0		0.0		0.0			1	2.	2
	PIER 4																								
100	PILE VERTICAL REINF	9	32	51			S				22	0.0											23	3.	2530
101	PILE SPIRAL REINF	4	4	67			S				1	1.0		3.0							88		288	10.	772
102	PILE CAP BOT LONG REIN	7	4	50			S				18	3.0											18	3.	149
103	PILE CAP TOP LONG REIN	6	3	50			S	E			18	3.0											18	3.	82
104	PILE CAP SIDE LONG REIN	4	6	50			S				18	3.0											18	3.	73
105	PILE CAP STIRRUPS REIN	4	20	61			S				2	1.0	2	7.0	3	8.0		3.0		3.0			8	4.	111
106	PILE CAP STIRRUPS REIN	4	20	61			S				2	1.0		3.0		3.0		0.0		0.0			2	4.	31
106	PILE CAP STIRR REINF SKEW	4	2	61			S				2	3.0	2	7.0	3	8.0		3.0		3.0			8	6.	11
106	PILE CAP STIRR REINF SHORT	4	2	61			S					11.0	2	7.0	3	8.0		3.0		3.0			7	2.	10
106	PILE CAP STIRR REINF SKEW	4	2	61			S				2	3.0		3.0		3.0		0.0		0.0			2	6.	3
106	PILE CAP STIRR REINF SHORT	4	2	61			S					11.0		3.0		3.0		0.0		0.0			1	2.	2
	*** PIER 2 ***																								
200	FTNG BOT LONGIT	8	10	50			S				21	2.0											21	2.	565
200	FTNG BOT LONGIT	8	2	50			S				20	8.0											20	8.	110
200	FTNG BOT LONGIT	8	2	50			S				20	2.0											20	2.	108
200	FTNG BOT LONGIT	8	2	50			S				19	8.0											19	8.	105
201	FTNG TOP LONGIT	9	24	50			S				21	2.0											21	2.	1727
201	FTNG TOP LONGIT	9	2	50			S				20	8.0											20	8.	141
201	FTNG TOP LONGIT	9	2	50			S				20	2.0											20	2.	137
201	FTNG TOP LONGIT	9	2	50			S				19	8.0											19	8.	134
202	FTNG BOT TRANSV	6	28	50			S				9	8.0											9	8.	407
203	FTNG BOT EDGE DIAGONAL	5	2	50			S				2	6.0											2	6.	13
202	FTNG TOP TRANSV	6	15	50			S				9	8.0											9	8.	218
203	FTNG TOP EDGE DIAGONAL	8	2	50			S				2	6.0											2	6.	13
204	COLUMN 1 & 2 VERT REINF	9	40	65			S				1	0.0	20	0.0		0.0							20	9.	2822
205	COLUMN 1 VERT REINF	9	20	50			S				26	5.0											26	5.	1796
205	COLUMN 2 VERT REINF	9	20	50			S				25	11.0											25	11.	1762
206	COLUMN 1 & 2 STIRRUPS	5	117	83	T		S				2	11.0	2	11.0									13	4.	1627
207	COLUMN 1 & 2 TIES	4	936	80	T		S				3	2.0		10.0		7.0		2.0		2.0	45	90	4	0.	2501
208	COLLISION WALL HORIZ REINF	5	22	51			S				23	6.0											24	1.	553
209	COLLISION WALL TIE	4	22	80	T		S				2	6.0		4.0	1	0.0		2.0		2.0	90	124	3	8.	54
210	COLLISION WALL TIE	4	11	80	T		S				1	6.0		4.0	1	0.0		2.0		2.0	90	124	2	8.	20
211	COLLISION WALL TIE CONN EXIS	5	22	80	T		S				2	0.0	2	0.0		0.0		3.0		0.0	124	0	3	11.	90
212	COLLISION WALL VERT	4	23	50			S				10	0.0											10	0.	154
213	X-BEAM BOTT LONGIT	9	2	51							23	6.0											24	9.	168
213	X-BEAM BOTT LONGIT	9	2	51							23	3.0											24	6.	167
213	X-BEAM BOTT LONGIT	9	1	51							23	0.0											24	3.	82
214	X-BEAM TOP LONGIT	11	4	80				E			26	3.0		0.0	5	0.0		0.0		7.0		88	30	11.	657
215	X-BEAM SIDE LONGIT	5	10	50							23	6.0											23	6.	245
216	X-BEAM STIRRUPS	5	13	63							1	9.0	6	7.0	6	7.0		9.0		9.0			15	11.	216
	** PIER 3 ***																								
200	FTNG BOT LONGIT	8	10	50			S				18	8.0											18	8.	498
200	FTNG BOT LONGIT	8	2	50			S				18	2.0											18	2.	97
200	FTNG BOT LONGIT	8	2	50			S				17	8.0											17	8.	94
200	FTNG BOT LONGIT	8	2	50			S				17	2.0											17	2.	92
201	FTNG TOP LONGIT	9	24	50			S				18	8.0											18	8.	1523
201	FTNG TOP LONGIT	9	2	50			S				18	2.0											18	2.	124
201	FTNG TOP LONGIT	9	2	50			S				17	8.0											17	8.	120
201	FTNG TOP LONGIT	9	2	50			S				17	2.0											17	2.	117
202	FTNG BOT TRANSV	6	27	50			S				9	8.0											9	8.	392
202	FTNG TOP TRANSV	6	13	50			S				9	8.0											9	8.	189
203	FTNG TOP & BOT EDGE DIAGONAL	8	2	50			S				2	6.0											2	6.	13
204	COLUMN 1 & 2 VERT REINF	9	40	65			S				1	0.0	20	0.0		0.0							20	9.	2822
205	COLUMN 1 VERT REINF	9	20	50			S				25	3.0											25	3.	1717
205	COLUMN 2 VERT REINF	9	20	50			S				24	11.0											24	11.	1694
206	COLUMN 1 & 2 STIRRUPS	5	117	83	T		S				2	11.0											7	6.	915
207	COLUMN 1 & 2 TIES	4	936	82	T		S				3	2.0		10.0		7.0		2.0		2.0	45	90	5	0.	3126
208	COLLISION WALL HORIZ REINF	5	22	51			S				20	6.0											21	1.	484
209	COLLISION WALL TIE	4	22	80	T		S				1	9.0		4.0	1	0.0		2.0		2.0	90	123	2	11.	43
210	COLLISION WALL TIE	4	11	80	T		S				2	6.0		4.0	1	0.0		2.0		2.0	90	123	3	8.	27
211	COLLISION WALL TIE CONN EXIS	5	22	80	T		S				2	0.0	2	0.0		0.0		3.0		0.0	123	0	3	11.	90
212	COLLISION WALL VERTICAL	4	21	50			S				10	0.0											10	0.	140
213	X-BEAM BOTT LONGIT	9	2	51							20	6.0											21	9.	148
213	X-BEAM BOTT LONGIT	9	2	51							20	3.0											21	6.	146
213	X-BEAM BOTT LONGIT	9	1	51							20	0.0											21	3.	72
214	X-BEAM TOP LONGIT	11	4	80				E			23	8.0		0.0	5	0.0		0.0		7.0		88	28	4.	602
215	X-BEAM SIDE LONGIT	5	10	50							20	6.0											20	6.	214
216	X-BEAM STIRRUPS	5	11	63							1	9.0	6	7.0	6	7.0		9.0		9.0			15	11.	183
	GIRDER G1																								
300	BOT LONG OVER SPAN 1,2 & 3	11	6	50							15	0.0											15	0.	478
301	BOT LONG SPAN 1,2 & 3	11	6	50							29	0.0											29	0.	924
302	BOT LONG SPAN 1 & 3	11	4	50							39	0.0											39	0.	829
303	BOT LONG SPAN 1 & 3 CURV BAR	11	4	51							53	0.0											54	7.	1160
304	BOT LONG CURV AT SPAN 1	11	2	50							15	10.0											15	10.	168
304	BOT LONG CURV AT SPAN 2	11	4	50							16	0.0											16	0.	340
304	BOT LONG CURV AT SPAN 3	11	2	50							17	0.0											17	0.	181
305	BOT LONG CURV AT SPAN 2	11	2	50							60	0.0											60	0.	638
306	SIDE LONG AT X-BEAMS	5	4	50							8	0.0											8	0.	33
307	SIDE LONG AT X-BEAMS	5	4	50							20	0.0											20	0.	83
308	SIDE LONG AT X-BEAMS	5	4	50							42	0.0											42	0.	175
309	SIDE LONG OVER SPAN 1,2&3	5	20	50							40	0.0											40	0.	834
309	SIDE LONG OVER SPAN 3	5	4	50							9	8.0											9	8.	40
310	STIRRUP AT TANG SPAN 1&3	4	62	63							1	3.0	2	11.0	2	11.0		4.5		4.5			7	4.	304
310	STIRR AT HAUNCH SPAN 1,2 &3	4	48	63					V	12	1	3.0	2	11.0	2	11.0		4.5		4.5			7	4.	
											1	3.0	3	4.0	3	4.0		4.5		4.5			8	2.	248
310	STIRR AT HAUNCH SPAN 1,2 &3	4	76	63					V	4	1	3.0	3	6.0	3	6.0		4.5		4.5			8	6.	
											1	3.0	5	8.0	5	8.0		4.5		4.5			12	10.	542

MARK NO.	LOCATION	SIZE	NO. REQ'D.	BEND TYPE	TIE OR STIR.	FLD.WELD	SUBSTR.	EPOXY COAT.	VARIES	NO.EACH	U Ft.	U In.	W Ft.	W In.	X Ft.	X In.	Y Ft.	Y In.	Z Ft.	Z In.	θ1 Deg.	θ2 Deg.	LENGTH Ft.	LENGTH In.	WEIGHT Lbs.
	GIRDER G2																								
300	BOT LONG SPAN 1,2 & 3	11	6	50							15	0.0											15	0.	478
301	BOT LONG SPAN 1,2 & 3	11	6	50							29	0.0											29	0.	924
302	BOT LONG SPAN 1&3	11	4	50							39	0.0											39	0.	829
303	BOT LONG SPAN 1&3 CURV BAR	11	4	51							53	0.0											54	7.	1160
304	BOT LONG CURV AT SPAN 1	11	2	50							16	4.0											16	4.	174
304	BOT LONG CURV AT SPAN 2	11	4	50							16	4.0											16	4.	348
304	BOT LONG CURV AT SPAN 3	11	2	50							17	6.0											17	6.	186
305	BOT LONG CURV AT SPAN 2	11	2	50							60	0.0											60	0.	638
306	SIDE LONG AT X-BEAMS	5	4	50							8	0.0											8	0.	33
307	SIDE LONG AT X-BEAMS	5	4	50							20	0.0											20	0.	83
308	SIDE LONG AT X-BEAMS	5	4	50							42	0.0											42	0.	175
309	SIDE LONG OVER SPANS 1,2 &3	5	20	50							40	0.0											40	0.	834
309	SIDE LONG OVER SPAN 3	5	4	50							11	6.0											11	6.	48
310	STIRRUPS AT TANG SPAN 1&3	4	64	63							1	3.0	2	11.0	2	11.0		4.5		4.5			7	4.	314
310	STIRR AT HAUNCH SPAN 1,2&3	4	48	63					V	12	1	3.0	2	11.0	2	11.0		4.5		4.5			7	4.	
											1	3.0	3	4.0	3	4.0		4.5		4.5			8	2.	248
310	STIRR AT HAUNCH SPAN 1,2&3	4	76	63					V	4	1	3.0	3	6.0	3	6.0		4.5		4.5			8	6.	
											1	3.0	5	8.0	5	8.0		4.5		4.5			12	10.	542
	GIRDER G3																								
300	BOT LONG SPAN 1,2 & 3	11	6	50							15	0.0											1	0.	478
301	BOT LONG SPAN 1,2 & 3	11	6	50							29	0.0											29	0.	924
302	BOT LONG SPAN 1&3	11	4	50							39	0.0											39	0.	829
303	BOT LONG SPAN 1&3 CURV BAR	11	4	51							53	0.0											54	7.	1160
304	BOT LONG CURV AT SPAN 1	11	2	50							16	9.0											16	9.	178
304	BOT LONG CURV AT SPAN 2	11	4	50							13	5.0											13	5.	285
304	BOT LONG CURV AT SPAN 3	11	2	50							18	4.0											18	4.	195
305	BOT LONG CURV AT SPAN 2	11	2	50							60	0.0											60	0.	638
306	SIDE LONG AT X-BEAMS	5	4	50							8	0.0											8	0.	33
307	SIDE LONG AT X-BEAMS	5	4	50							20	0.0											20	0.	83
308	SIDE LONG AT X-BEAMS	5	4	50							42	0.0											42	0.	175
309	SIDE LONG OVER SPANS 1,2&3	5	20	50							40	0.0											40	0.	834
309	SIDE LONG OVER SPANS 3	5	4	50							13	4.0											13	4.	56
310	STIRRUPS AT TANG SPAN 1&3	4	66	63							1	3.0	2	11.0	2	11.0		4.5		4.5			7	4.	323
310	STIRR AT HAUNCH SPAN 1,2&3	4	48	63					V	12	1	3.0	2	11.0	2	11.0		4.5		4.5			7	4.	
											1	3.0	3	4.0	3	4.0		4.5		4.5			8	2.	248
310	STIRR AT HAUNCH SPAN 1,2&3	4	76	63					V	4	1	3.0	3	6.0	3	6.0		4.5		4.5			8	6.	
											1	3.0	5	8.0	5	8.0		4.5		4.5			12	10.	542
	INTERM DIAPH D1 TO D6 **																								
311	BOTT LONGIT AT D1	6	3	50							25	2.0											25	2.	113
311	TOP LONGIT AT D1	6	2	50				E			24	1.0											24	1.	72
312	STIRRUPS	4	24	63								9.0	2	2.0	2	2.0		4.5		4.5			5	4.	85
311	BOTT LONGIT AT D2	6	3	50							24	5.5											24	6.	110
311	TOP LONGIT AT D2	6	2	50				E			24	2.0											24	2.	73
312	STIRRUPS	4	24	63								9.0	2	2.0	2	2.0		4.5		4.5			5	4.	85
311	BOTT LONGIT AT D3	6	3	50							22	11.0											22	11.	103
311	TOP LONGIT AT D3	6	2	50				E			22	4.5											22	5.	67
312	STIRRUPS	4	22	63								9.0	2	2.0	2	2.0		4.5		4.5			5	4.	78
311	BOTT LONGIT AT D4	6	3	50							22	1.0											22	1.	99
311	TOP LONGIT AT D4	6	2	50				E			21	6.0											21	6.	65
312	STIRRUPS	4	20	63								9.0	2	2.0	2	2.0		4.5		4.5			5	4.	71
311	BOTT LONGIT AT D5	6	3	50							20	6.0											20	6.	92
311	TOP LONGIT AT D5	6	2	50				E			20	3.0											20	3.	61
312	STIRRUPS	4	20	63								9.0	2	2.0	2	2.0		4.5		4.5			5	4.	71
311	BOTT LONGIT AT D6	6	3	50							19	11.0	2	2.0	2	2.0		4.5		4.5			19	11.	90
311	TOP LONGIT AT D6	6	2	50				E			19	8.0											19	8.	59
312	STIRRUPS	4	18	63								9.0	2	2.0	2	2.0		4.5		4.5			5	4.	64
	***SLAB REINFORCEMENT																								
400	BOT LONG OVER SPAN 1	5	20	50							40	0.0											40	0.	834
400	BOT LONG OVER SPAN 1	5	3	50							25	0.0											25	0.	78
401	BOT LONG OVER SPAN 1	4	2	50							40	0.0											40	0.	53
400	BOT LONG OVER SPAN 1 & 2	5	17	50							40	0.0											40	0.	709
401	BOT LONG OVER SPAN 1 & 2	4	2	50							40	0.0											40	0.	53
400	BOT LONG OVER SPAN 2	5	17	50							40	0.0											40	0.	709
400	BOT LONG OVER SPAN 2	5	2	50							26	0.0											26	0.	54
401	BOT LONG OVER SPAN 2	4	2	50							40	0.0											40	0.	53
400	BOT LONG OVER SPAN 2 & 3	5	15	50							40	0.0											40	0.	626
401	BOT LONG OVER SPAN 2 & 3	4	2	50							40	0.0											40	0.	53
400	BOT LONG OVER SPAN 3	5	16	50							40	0.0											40	0.	668
400	BOT LONG OVER SPAN 3	5	1	50							26	0.0											26	0.	27
400	BOT LONG OVER SPAN 3	5	7	50							14	0.0											14	0.	102
400	BOT LONG OVER SPAN 3	5	4	50							13	0.0											13	0.	54
400	BOT LONG OVER SPAN 3	5	4	50							12	0.0											12	0.	50
401	BOT LONG OVER SPAN 3	4	2	50							40	0.0											40	0.	53
401	BOT LONG OVER SPAN 3	4	2	50							9	6.0											9	6.	13
402	BOT TRANSV OVER SPAN 1	5	33	50					V	1	2	9.0											2	9.	
											21	6.0											21	6.	417
402	BOT TRANSV OVER SPAN 1	5	128	50					V	2	21	6.0											21	6.	
											19	6.0											19	6.	2737
402	BOT TRANSV OVER SPAN 2	5	155	50					V	2	19	6.0											19	6.	
											17	9.0											17	9.	3011
402	BOT TRANSV OVER SPAN 3	5	98	50					V	2	17	9.0											17	9.	
											16	6.0											16	6.	1750
402	BOT TRANSV OVER SPAN 3	5	16	50					V	1	16	6.0											16	6.	
											4	3.0											4	3.	173
403	TOP LONG OVER PIER 2 & 3	11	12	50				E			15	0.0											15	0.	956
403	TOP LONG OVER PIER 2 & 3	11	12	50				E			20	0.0											20	0.	1275
403	TOP LONG OVER PIER 2 & 3	11	12	50				E			30	0.0											30	0.	1913
403	TOP LONG OVER PIER 2 & 3	11	24	50				E			60	0.0											60	0.	7651
404	TOP LONG OVER PIER 2 & 3	5	4	50				E			40	0.0											40	0.	167
404	TOP LONG OVER SPAN 1 ON GDS	5	6	50				E			25	0.0											25	0.	156
405	TOP LONG OVER PIER 1	11	6	80				E			26	0.0	2	0.0		0.0		7.0		0.0	90	0	27	8.	882
406	TOP LONG OVER PIER 1	5	2	80				E			32	9.0	1	0.0		0.0		2.5		0.0	90	0	33	7.	70
406	TOP LONG OVER PIER 1	5	2	80				E			33	6.0	1	0.0		0.0		2.5		0.0	90	0	34	4.	72
406	TOP LONG OVER PIER 1	5	2	80				E			33	9.0	1	0.0		0.0		2.5		0.0	90	0	34	7.	72
406	TOP LONG OVER SPAN 1 BT GDS	5	2	80				E			39	0.0	1	0.0		0.0		2.5		0.0	90	0	39	10.	83
404	TOP LONG OVER SPAN 2 ON GDS	5	6	50				E			40	0.0											40	0.	250
404	TOP LONG OVER SPAN 2 ON G1	5	2	50				E			13	0.0											13	0.	27
404	TOP LONG OVER SPAN 2 ON G2	5	2	50				E			13	6.0											13	6.	28

STEEL REINFORCING BAR QUANTITIES NOT INCLUDED IN THIS BAR LIST
TRAFFIC BARRIER
BRIDGE GRATE INLETS
RETAINING WALL

BENDING DIAGRAMS

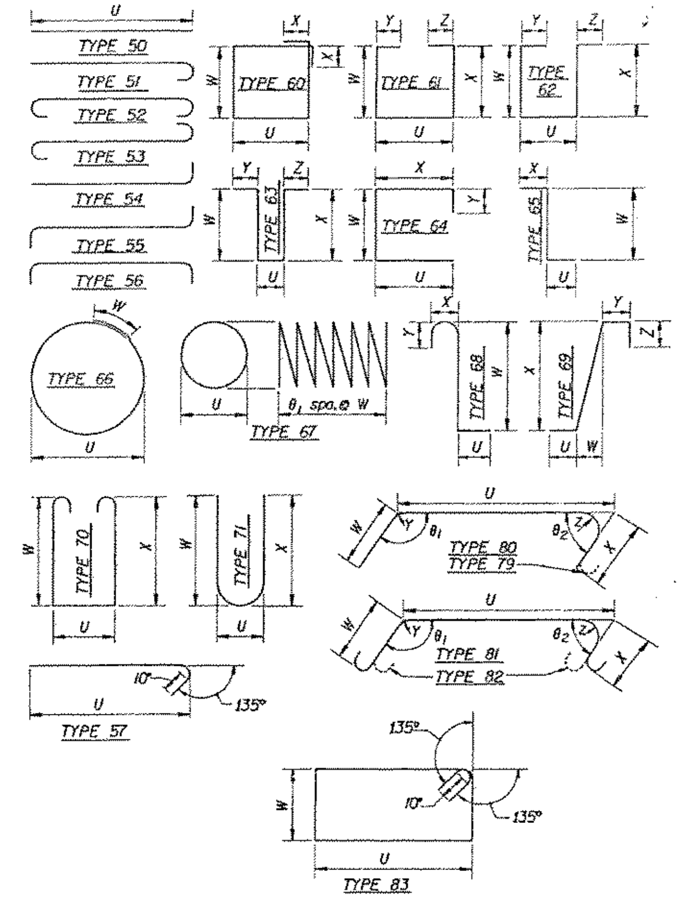

NOTES:

1. All reinforcing bars on this sheet shall be AASHTO M-31,Grade 60 unless shown otherwise.

2. Reinforcing for traffic barriers not shown in this bar list. See Traffic Barrier sheet.

3. Bend for transverse bars due to roadway crown conditions have not been shown. These bars shall be bent as required to conform to the configuration of the structure.

$ Number and length of bars to be determined by the Contractor from Plans.

Bridge Design Engineer	G. Markuk	8-89	
Supervisor	Myint Lwin	8-89	
Reviewed By			
Designed By	M. Sherkat	8-89	
Checked By	J. A. VanLund	8-89	
Detailed By	V. S. Nguyen	8-89	
Architect			
Preliminary Plan By		DATE	REVISION / BY / APP'D

REGION NO.	STATE	FED.AID PROJ.NO.	SHEET NO.	TOTAL SHEETS
10	WASH.	IR-405-3(703)		

JOB NUMBER 89W091
CONTRACT NO 3716

BRIDGES AND STRUCTURES

APPROVED

1 ZG4:[1057]BAR405.DGN;1

Washington State Department of Transportation

SR 405
TOTEM LAKE/NE 124TH STREET INTERCHANGE
BNRR O'XING 405/56E WIDENING
BAR LIST

BRIDGE SHEET NO. 11
SHEET 91 OF 109 SHEETS
192/63

DOT FORM 221-013 Revised 11/83

2-AUG-1989

SR 405 JOB NO. 7018 SHEET 11 of 13

REVISION | DATE | BY | APP'D

SR 405/130

S - Bar is included in substructure quantities.
F - Bar to be field welded.
T - Tie or Stirrup.
E - Bar is to be epoxy coated.
V - Bar dimensions vary between dimensions shown on this line and the following line.

MARK NO.	LOCATION	SIZE	NO. REQ'D.	BEND TYPE	TIE OR STIR.	F.O.W.E.D.	SUBSTR.	EPOXY COAT.	VARIES	NO.EACH	DIMENSIONS (Out to Out) U Ft.	U In.	W Ft.	W In.	X Ft.	X In.	Y Ft.	Y In.	Z Ft.	Z In.	θ_1 Deg.	θ_2 Deg.	LENGTH Ft.	LENGTH In.	WEIGHT Lbs.
404	TOP LONG OVER SPAN 2 ON G3	5	2	50				E			14	6.0											14	6.	30
404	TOP LONG OVER SPAN 2 ON G1	5	2	50				E			21	0.0											21	0.	44
404	TOP LONG OVER SPAN 2 ON G2	5	2	50				E			22	6.0											22	6.	47
404	TOP LONG OVER SPAN 2 ON G3	5	2	50				E			23	0.0											23	0.	48
404	TOP LONG OVER SPAN 2 BT GD9	5	2	50				E			40	0.0											40	0.	83
404	TOP LONG OVER SPAN 3	5	6	50				E			25	0.0											25	0.	156
405	TOP LONG OVER PIER 4	11	5	80				E			26	0.0	2	9.0		0.0		7.0		0.0	90	0	27	8.	882
405	TOP LONG OVER SPAN 3	5	2	80				E			33	0.0	1	0.0		0.0		2.5		0.0	90	0	33	10.	71
405	TOP LONG OVER SPAN 3	5	2	80				E			34	0.0	1	0.0		0.0		2.5		0.0	90	0	34	10.	73
405	TOP LONG OVER SPAN 3	5	2	80				E			35	0.0	1	0.0		0.0		2.5		0.0	90	0	35	10.	75
407	TOP TRANSV OVER SPAN 1	5	33	51				E	V	1	2	9.0											3	4.	
											21	6.0											22	1.	437
407	TOP TRANSV OVER SPAN 2	5	128	51				E	V	2	21	6.0											22	1.	
											19	6.0											20	1.	2815
407	TOP TRANSV OVER SPAN 2	5	155	51				E	V	2	19	6.0											20	1.	
											17	9.0											18	4.	3105
407	TOP TRANSV OVER SPAN 3	5	98	51				E	V	2	17	9.0											18	4.	
											16	6.0											17	1.	1810
407	TOP TRANSV OVER SPAN 3	5	16	51				E	V	1	16	6.0											17	1.	
											4	3.0											4	10.	183
51	TRAFFIC BARRIER	5	267	69				E			2	6.0		10.5	1	6.0		6.0		0.0			2	7.	719
52	TRAFFIC BARRIER	4	134	80							1	6.0	1	6.0		0.0		2.0		0.0	96	0	2	11.	261

S - Bar is included in substructure quantities.
F - Bar to be field welded.
T - Tie or Stirrup.
E - Bar is to be epoxy coated.
V - Bar dimensions vary between dimensions shown on this line and the following line.

MARK NO.	LOCATION	SIZE	NO. REQ'D.	BEND TYPE	TIE OR STIR.	F.O.W.E.D.	SUBSTR.	EPOXY COAT.	VARIES	NO.EACH	DIMENSIONS (Out to Out) U Ft.	U In.	W Ft.	W In.	X Ft.	X In.	Y Ft.	Y In.	Z Ft.	Z In.	θ_1 Deg.	θ_2 Deg.	LENGTH Ft.	LENGTH In.	WEIGHT Lbs.

STEEL REINFORCING BAR QUANTITIES NOT INCLUDED IN THIS BAR LIST
TRAFFIC BARRIER
BRIDGE GRATE INLETS
RETAINING WALL

2878

BENDING DIAGRAMS

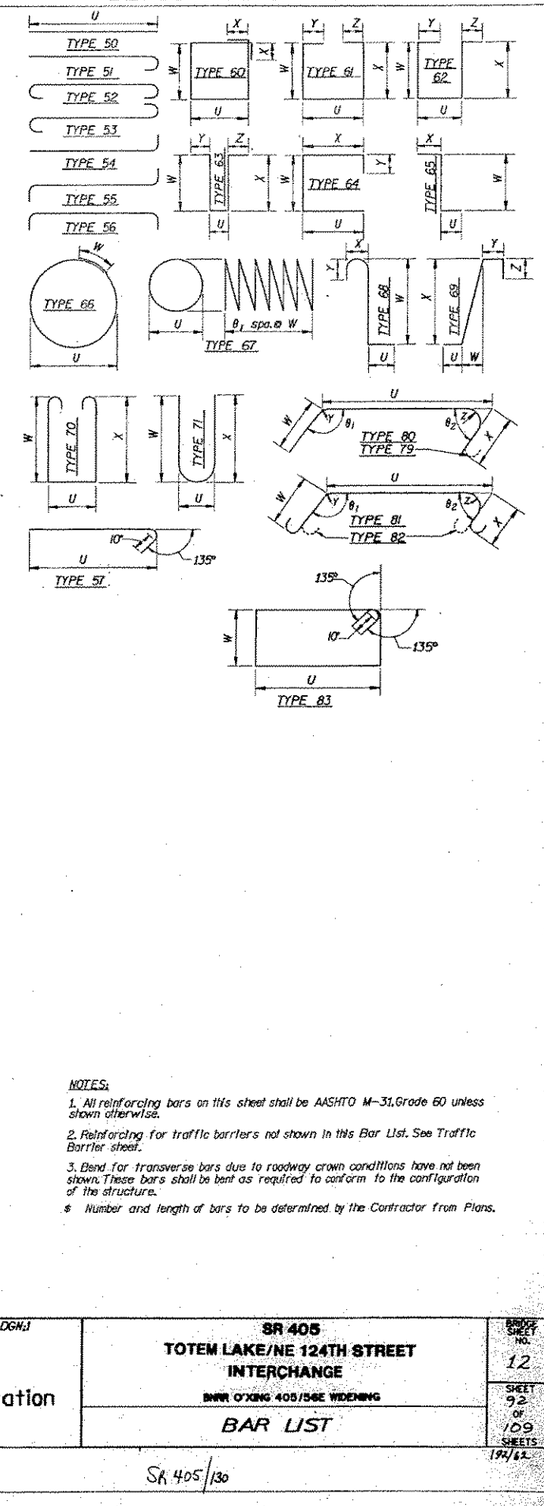

NOTES:

1. All reinforcing bars on this sheet shall be AASHTO M-31, Grade 60 unless shown otherwise.
2. Reinforcing for traffic barriers not shown in this Bar List. See Traffic Barrier sheet.
3. Bend for transverse bars due to roadway crown conditions have not been shown. These bars shall be bent as required to conform to the configuration of the structure.

$ Number and length of bars to be determined by the Contractor from Plans.

2-AUG-1999

REVISION	BY	APP'D

DATE

SR 405 JOB NO. 7018 SHEET 12 OF 13

Bridge Design Engineer		8-89
Supervisor		8-89
Reviewed By		
Designed By	M. Sherkat	8-89
Checked By	J. A. VanLund	8-89
Detailed By	V. S. Nguyen	8-89
Architect		
Preliminary Plan By		

DATE	REVISION	BY	APP'D

REGION NO.	STATE	FED.AID PROJ.NO.
10	WASH.	IR-405-3(703)

JOB NUMBER 89W091
CONTRACT NO 37116

SHEET NO. | TOTAL SHEETS

BRIDGES AND STRUCTURES

APPROVED

Z:\ZG4\[1057]BAR405.DGN;1

Washington State Department of Transportation

SR 405
TOTEM LAKE/NE 124TH STREET INTERCHANGE
BNRR O'XING 405/56E WIDENING

BAR LIST

BRIDGE SHEET NO. 12

SHEET 92 OF 109 SHEETS

192/62

DOT FORM 221-013 Revised 11/83

SR 405/130

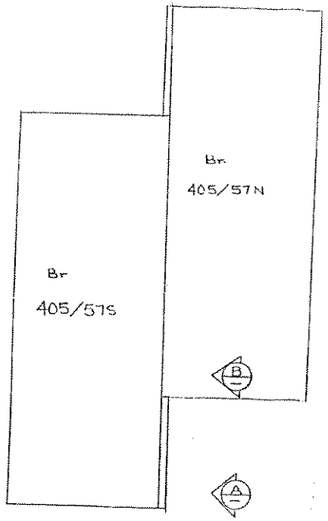

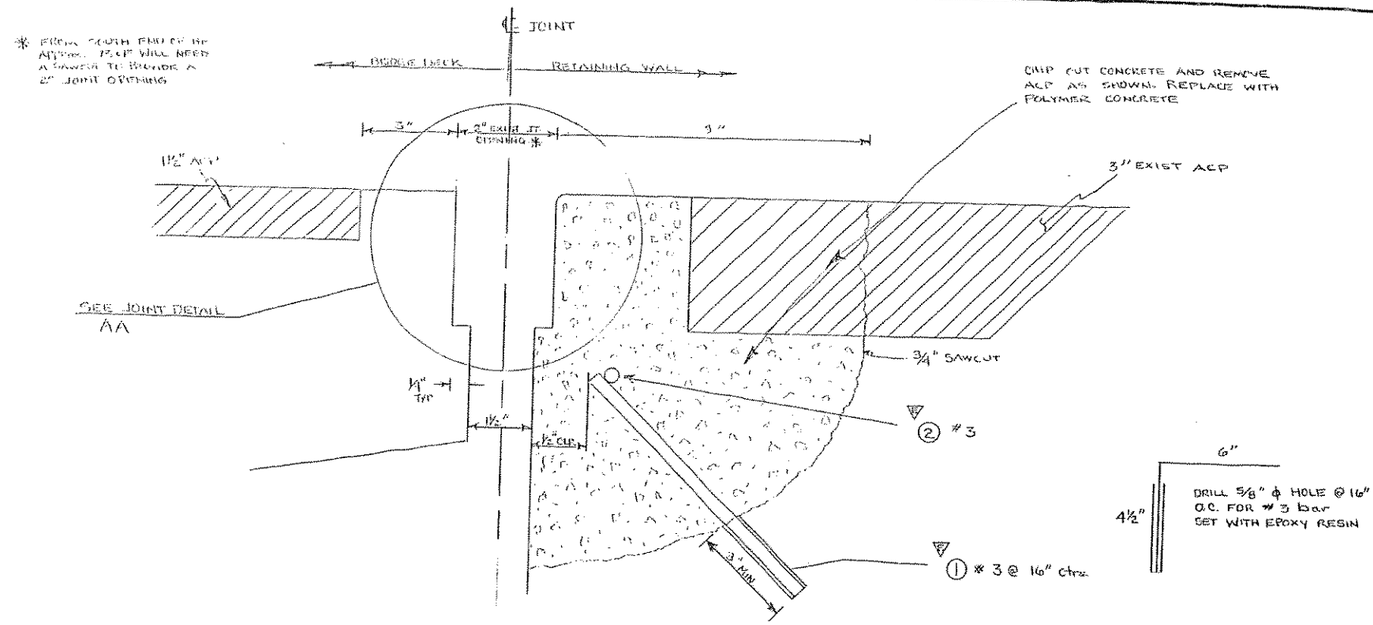

EXPANSION JOINT DETAIL

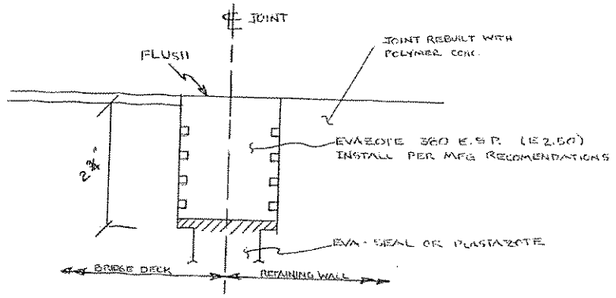

SECTION A

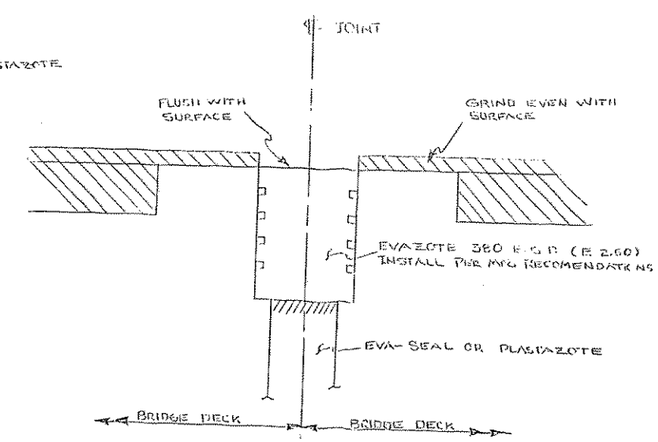

SECTION B

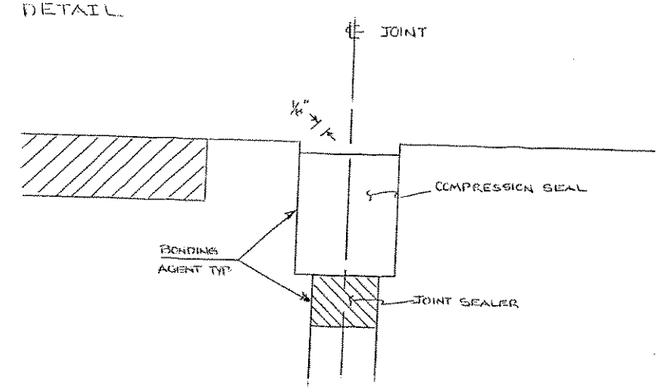

SECTION AA

FOR DETAILS NOT SHOWN SEE SEC AA

☆ AS BUILT BY REGION

DRAWN					REGION NO.	STATE	FED. AID PROJ. NO.	SHEET NO.	TOTAL SHEETS	HIGHWAY DIVISION
CHECKED					10	WASH				
PROJ. ENGR.					JOB NUMBER					
DIST. ADM.					CONTRACT NO.					
	DATE	REVISION	BY	APP'D	3716					

DOT FORM 221-011 Revised 9/82

Washington State Department of Transportation

SR 405
TOTEM LAKE/NE. 124TH STREET INTERCHANGE
BNRR O'XING 405/56E WIDENING
Br 405/57N, Br 405/57S
LONGITUDINAL EXPANSION JOINT

BRIDGE SHEET NO 13

SHEET 92 A OF 109 SHEETS

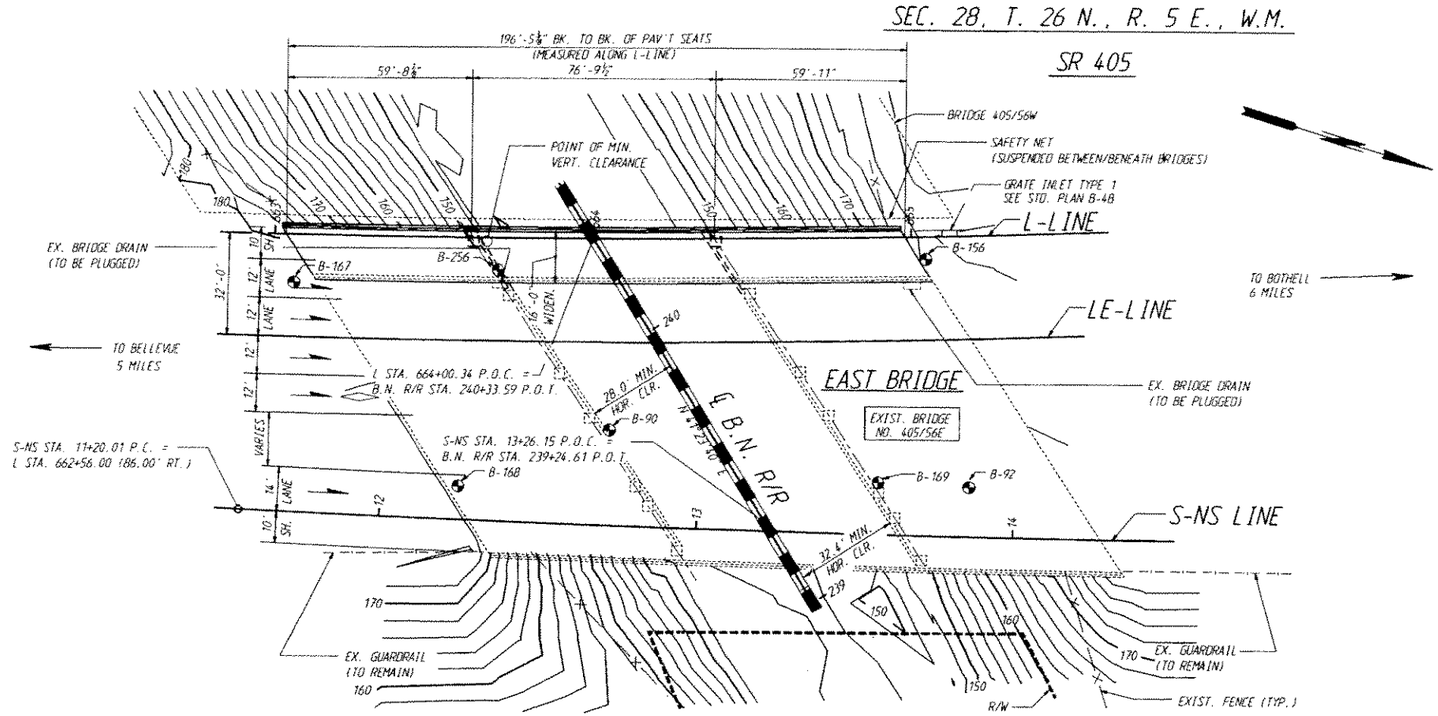

PLAN

MATCH EX. BEARINGS FOR ALL PIERS

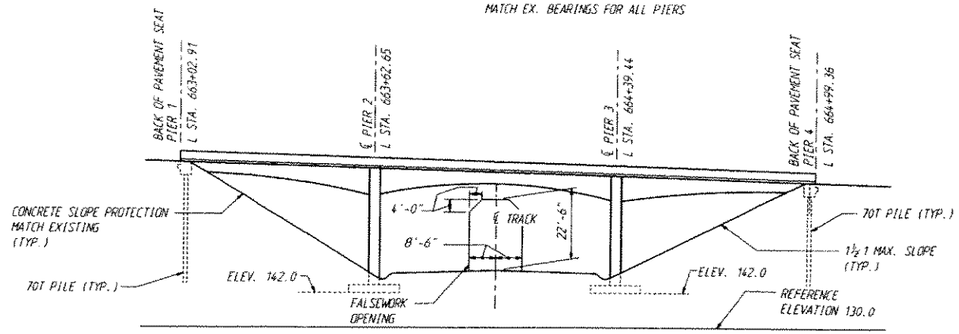

DATUM

CITY OF SEATTLE

ELEVATION

FOR EMBANKMENT DETAILS, SEE STD. PLAN H-9

CURVE DATA

	L LINE	S-NS LINE
P. I. STATION	657+28.93	13+90.18
Δ	27°22'07" LT.	4°07'19"
R	4297.19	7507.35
T	1146.38	270.17
L	1852.64	540.10
BK. TANGENT	N 6°55'50" E	N 12°53'34" W
de	1°20'00"	
l	200.00'	
CΔ	24°42'07"	

GENERAL NOTES

1. ALL MATERIAL AND WORKMANSHIP SHALL BE IN ACCORDANCE WITH THE REQUIREMENTS OF THE STATE OF WASHINGTON DEPARTMENT OF TRANSPORTATION'S STANDARD SPECIFICATIONS FOR ROAD, BRIDGES AND MUNICIPAL CONSTRUCTION DATED 1991.
2. THE WIDENED PORTION OF THIS STRUCTURE HAS BEEN DESIGNED IN ACCORDANCE WITH THE REQUIREMENTS OF THE 1989 AASHTO SPECIFICATIONS FOR HIGHWAY BRIDGES WITH INTERIM SPECIFICATIONS THROUGH 1991. ALL ELEMENTS HAVE BEEN DESIGNED FOR SEVICE LOAD STRESSES AND CHECKED FOR REQUIREMENTS OF LOAD FACTOR DESIGN.
3. SEISMIC DESIGN OF THE WIDENED PORTION OF THIS STRUCTURE CONFORMS WITH THE PROVISIONS OF THE "STANDARD SPECIFICATIONS FOR SEISMIC DESIGN OF HIGHWAY BRIDGES", DATED 1983. THE SEISMIC PERFORMANCE CATEGORY IS CAT. C AND THE ACCELERATION COEFFICIENT IS 0.25.
4. FOOTING ELEVATIONS AND SUBSTRUCTURE DETAILS ARE SUBJECT TO CHANGE DEPENDING UPON FOUNDATION MATERIAL ENCOUNTERED. REINFORCING STEEL FOR FOOTING, COLUMNS AND PILES SHALL NOT BE CUT UNTIL FINAL ELEVATIONS HAVE BEEN DETERMINED AND SUBSTRUCTURE DETAILS HAVE SLCN MODIFIED.
5. ELEVATIONS SHOWN ON THE PLANS ARE BASED ON AS BUILT PLANS AND FIELD SURVEY DATA. THE NEW STRUCTURE IS INTENDED TO MATCH THE EXISTING STRUCTURE. THEREFORE, ELEVATIONS GIVEN ON THE PLANS SHALL BE VERIFIED IN THE FIELD FOR COMPATIBILITY.
6. MAXIMUM FALSEWORK SPAN DEFLECTION SHALL NOT BE LARGER THAN 0.07" (INCHES). FALSEWOSRK SHALL BE CAREFULLY RELEASED TO PREVENT IMPACT OR UNDUE STRESS IN STRUCTURE.
7. THE CONCRETE IN THE CLOSURE POURS SHALL BE CLASS 4000 LS ALL OTHER CAST IN PLACE CONCRETE SHALL BE CLASS 4000.
8. THE MAXIMUM DESIGN SOIL PRESSURE PER SQUARE FOOT IS 5 TONS FOR PIERS 2 & 3. THE MAXIMUM DESIGN LOAD FOR THE PILES IS 70 TONS.
9. UNLESS OTHERWISE SHOWN ON THE PLANS, THE CONCRETE COVER MEASURED FROM THE FACE OF THE CONCRETE TO THE FACE OF ANY REINFORCING BAR SHALL BE 2" AT THE TOP OF THE ROADWAY SLAB, 1" AT THE BOTTOM OF THE ROADWAY SLAB, 2½" AT THE BOTTOM OF FOOTINGS, PILES, AND 1½" AT ALL OTHER LOCATIONS SHOWN ON THE PLANS.

R.C. T-BEAM
WIDENING
LOADING: HS-25
OR
TWO 24 KIP AXLES @ 4' C'TRS.

Bridge Design Engr.	9-92					REGION NO.	STATE	FED. AID PROJ. NO.	SHEET NO.	TOTAL SHEETS	BRIDGE AND STRUCTURES
Supervisor	9-92					10	WASH.	I-IM-405-3(791)			
Designed By M. SHEIKHIZADEH	8/92					JOB NUMBER 92W070					
Checked By J. WEI	8/92										
Detailed By J. PLESHA	7/92										
Bridge Projects Engr.	4/92										
Prelim. Plan By R. ZELDENRUST	1/92										
Architect/Specialist R. Mays	4/92	DATE	REVISION	BY	APP'D	4161					

9-9-92 EXPIRES 12/17/93

1405_56EROOT-\FGB\LAYOUT1.FGB, 1 09-SEP-92

Washington State Department of Transportation

SR 405
NORTHUP TO BOTHEL
HOV AND SCADI-STAGE 1
BNRR OVERCROSSING 405/56E

LAYOUT

BRIDGE SHEET NO. 1

SHEET 364 OF 474 SHEETS

SR405/408

207/208

C.S. 1745 ~ PROJ. NO. XL0889D ~ DIST. NO. 1 ~ NORTHUP TO BOTHELL ~ SR 405 ~ BRIDGE NO. 405/56 E WIDENING

SR 405 JOB NO. 7042 SHEET 1

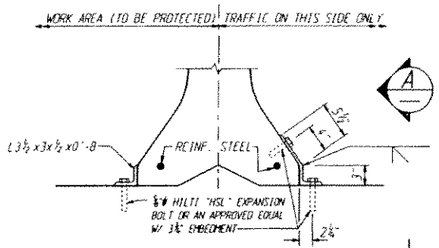

ANCHOR ASSEMBLY DETAIL

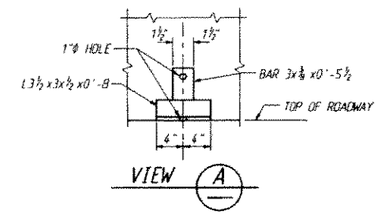

VIEW A

NOTES:
1. SHIMS MAY BE REQUIRED TO FIT THE BRACKET TO THE TEMPORARY CONCRETE BARRIER AND ROADWAY SURFACE.
2. LOCATION OF ANCHORS IS TO BE ADJUSTED TO MISS THE MAIN REINFORCING IN THE DECK WHEN DRILLING HOLES.
3. PROVIDE TWO (2) ANCHOR ASSEMBLIES FOR EACH SECTION OF THE TEMPORARY CONCRETE BARRIER ON THE ROADWAY SURFACE.
4. FOR DETAILS NOT SHOWN, SEE STANDARD C-8.
5. LOCATE ANCHORS APPROXIMATELY 2'-6" FROM BOTH ENDS OF EACH SECTION.
6. AFTER REMOVING THE TEMPORARY CONCRETE BARRIER, CLEAN AND FILL BOLT HOLES WITH A 2:1 SAND/CEMENT GROUT BY VOLUME.

COSTRUCTION SEQUENCE

1. CONSTRUCT SUBSTRUCTURE & SUPERSTRUCTURE
2. RELEASE FALSEWORK
3. POUR TRAFFIC BARRIER.
4. CONSTRUCT CLOSURE POUR.
5. OVERLAY THE ENTIRE BRIDGE.

EXISTING BRIDGE DECK ELEVATIONS

L LINE STATION	OFFSET	ELEVATION	L LINE STATION	OFFSET	ELEVATION
663+13.0	14.0' RT.	180.78	663+17.0	20.0' RT.	180.88
663+20	14.0' RT.	180.67	663+20	20.0' RT.	180.86
663+30	14.0' RT.	180.49	663+30	20.0' RT.	180.71
663+40	14.0' RT.	180.28	663+40	20.0' RT.	180.54
663+50	14.0' RT.	180.13	663+50	20.0' RT.	180.35
663+60	14.0' RT.	179.93	663+60	20.0' RT.	180.17
663+70	14.0' RT.	179.72	663+70	20.0' RT.	179.98
663+80	14.0' RT.	179.54	663+80	20.0' RT.	179.80
663+90	14.0' RT.	179.34	663+90	20.0' RT.	179.59
664+00	14.0' RT.	179.11	664+00	20.0' RT.	179.35
664+10	14.0' RT.	178.86	664+10	20.0' RT.	179.11
664+20	14.0' RT.	178.64	664+20	20.0' RT.	178.90
664+30	14.0' RT.	178.39	664+30	20.0' RT.	178.69
664+40	14.0' RT.	178.19	664+40	20.0' RT.	178.47
664+50	14.0' RT.	177.96	664+50	20.0' RT.	178.24
664+60	14.0' RT.	177.71	664+60	20.0' RT.	177.98
664+70	14.0' RT.	177.51	664+70	20.0' RT.	177.74
664+80	14.0' RT.	177.33	664+80	20.0' RT.	177.50
664+90	14.0' RT.	177.01	664+90	20.0' RT.	177.19
665+00	14.0' RT.	176.62	665+00	20.0' RT.	176.93
665+07.0	14.0' RT.	176.62	665+10.0	20.0' RT.	176.70

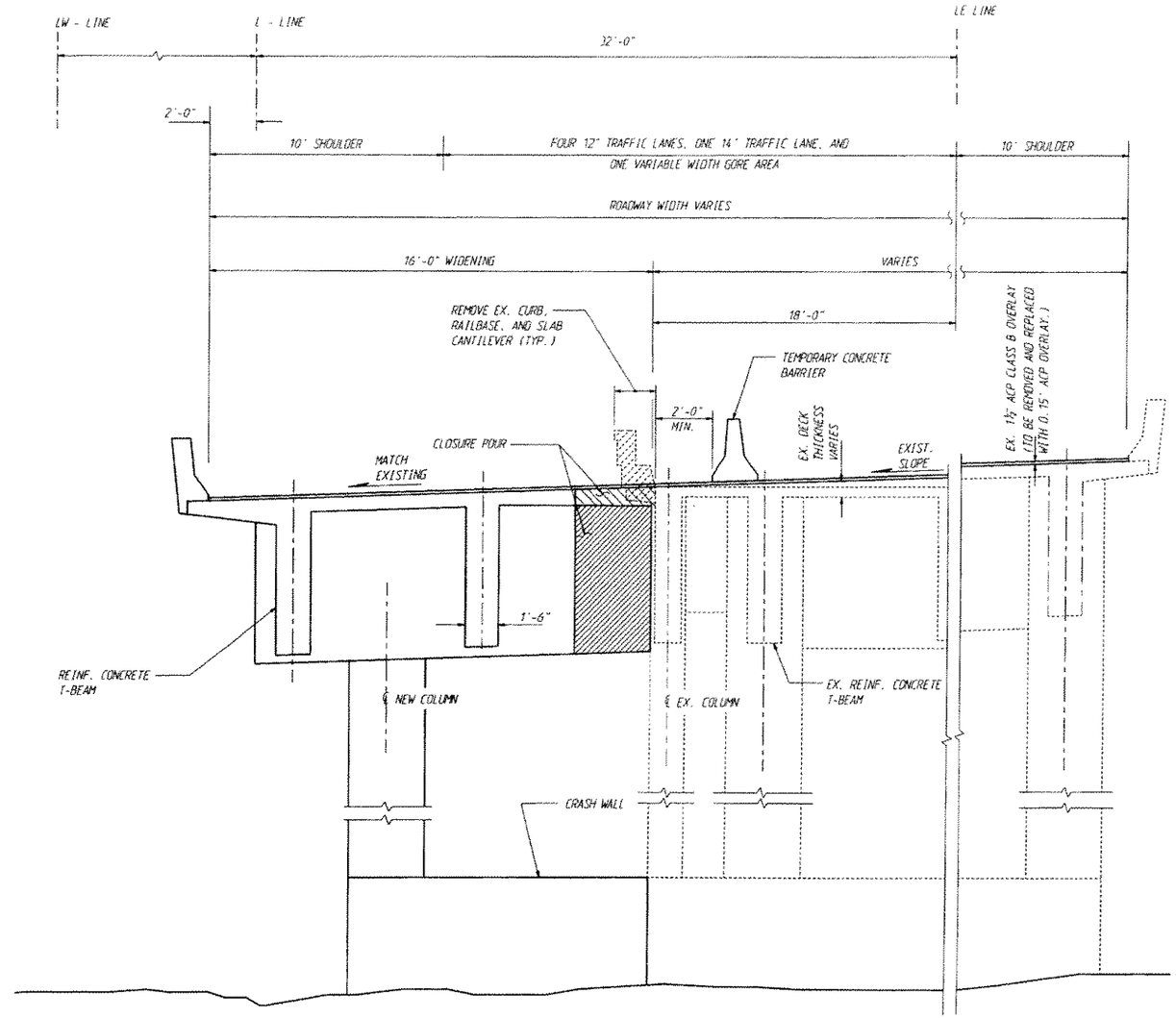

EAST BRIDGE TYPICAL SECTION

SHOWN AT INTERMEDIATE PIER

DIMENSIONS STATED ARE MEASURED RADIALLY UNLESS OTHERWISE NOTED

C.S. 1745 PROJ. NO. XL0889D DIST. NO. 1 NORTHUP TO BOTHELL SR405 BRIDGE NO. 405/56 E&W WIDENING

SR 405 JOB NO. 7042 SHEET 2

Bridge Design Engr.					REGION NO.	STATE	FED. AID PROJ. NO.	SHEET NO.	TOTAL SHEETS	BRIDGE AND STRUCTURES
Supervisor					10	WASH.	I-IM-405-3(791)			
Designed By M. SHEIKHIZADEH 8/92					JOB NUMBER					
Checked By J. WEI 8/92					92W070					
Detailed By J. PLESHA 7/92										
Bridge Projects Engr.										
Prelim. Plan By R. ZELDENRUST 1/92										
Architect/Specialist K. MAYS 6/92	DATE	REVISION	BY	APP'D	4161					

9-9-92 EXPIRES 1/13/93

I405_56EROOT.(FGB)LAYOUT2.FGB, 1 04-SEP-92

Washington State Department of Transportation

SR 405
NORTHUP TO BOTHEL
HOV AND SCADI-STAGE 1
BNRR OVERCROSSING 405/56E

LAYOUT

BRIDGE SHEET NO. 2

SHEET 365 OF 474 SHEETS

SR405/408

207/207

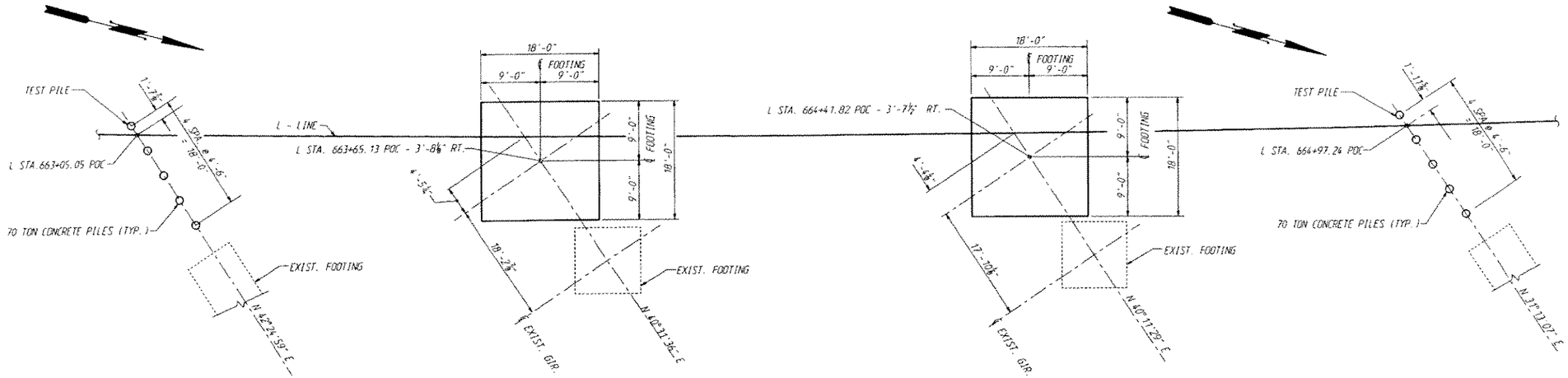

FOUNDATION LAYOUT

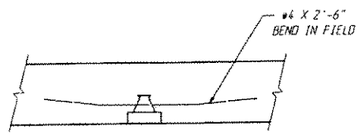

VIEW H

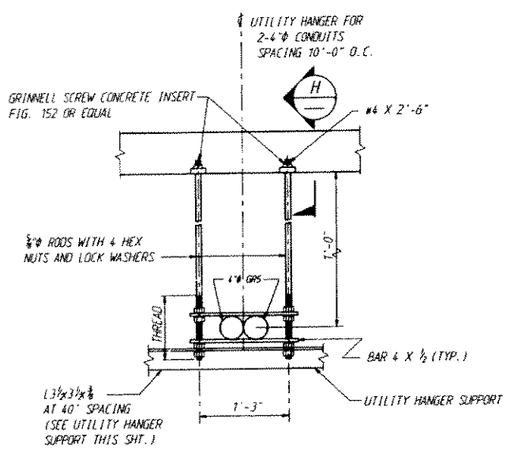

HANGER DETAIL

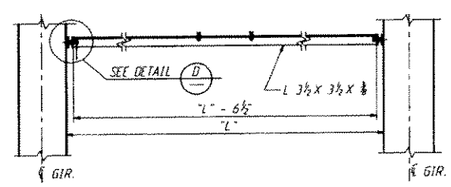

UTILITY HANGER SUPPORT

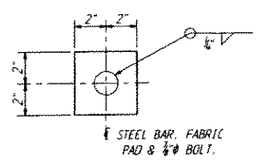

SECTION E

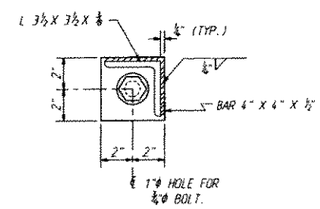

SECTION F

NOTE: ALL MATERIALS SHALL BE GALVANIZED AFTER FABRICATION PER AASHTO M 111 OR AASHTO M 232

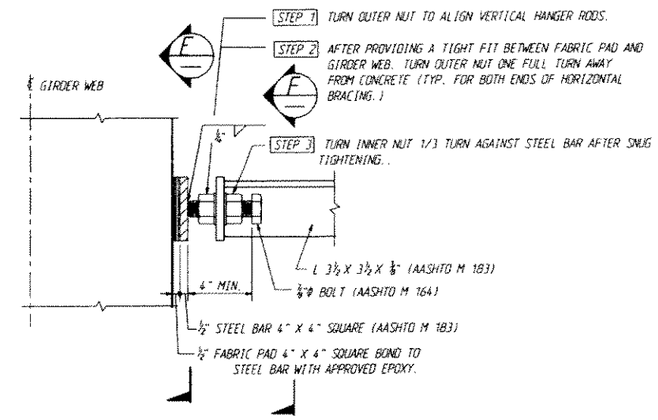

DETAIL D

Bridge Design Engr. [signature] 9-92					REGION NO.	STATE	FED. AID PROJ. NO.	SHEET NO.	TOTAL SHEETS
Supervisor [signature] 9-92					10	WASH.	I-IM-405-3(791)		
Designed By M. SHEIKHIZADEH 8/92					JOB NUMBER 92W070				
Checked By J.S. WEI 8/92									
Detailed By J. PLESHA 8/92									
Bridge Projects Engr.									
Prelim. Plan By									
Architect/Specialist	DATE	REVISION	BY	APP'D	4161				

BRIDGE AND STRUCTURES

M. MYINT LWIN — STATE OF WASHINGTON — REGISTERED PROFESSIONAL ENGINEER — EXPIRES 1/17/93 — 9-9-92

I405_56EROOT:(FGB)FOOTING.FGB;1 04-SEP-92

Washington State Department of Transportation

SR 405
NORTHUP TO BOTHEL
HOV AND SC&DI-STAGE 1
BNRR OVERCROSSING 405/56E

FOUNDATION LAYOUT & CONDUIT HANGER DETAILS

BRIDGE SHEET NO. 3

SHEET 366 OF 474 SHEETS

SR 405 JOB NO. 7042 SHEET 3

SR405/408

207/206

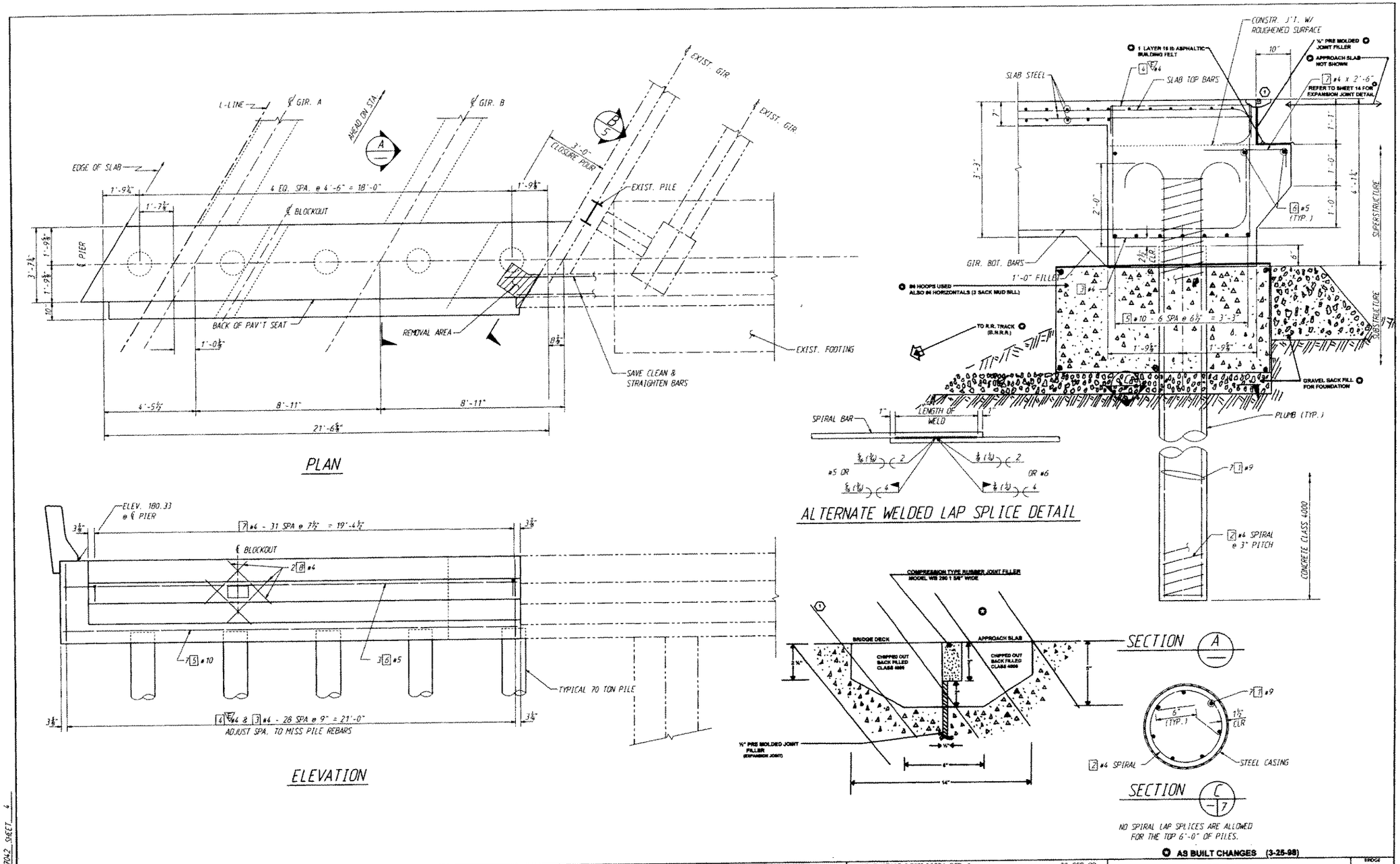

AS BUILT CHANGES (3-25-98)

Bridge Design Engr.				REGION NO.	STATE	FED. AID PROJ. NO.	SHEET NO.	TOTAL SHEETS	BRIDGE AND STRUCTURES	1405_56EROOT:(FGB)PIER1.FGB:1 08-SEP-92
Supervisor				10	WASH.	I-IM-405-3(791)				Washington State Department of Transportation
Designed By M. SHEIKHIZADEH 9/92				JOB NUMBER 92W070						
Checked By J. WEI 9/92										
Detailed By J. PLESHA 8/92										
Bridge Projects Engr.										
Prelim. Plan By										
Architect/Specialist	DATE	REVISION	BY	APP'D	4161					

M. MYINT LWIN, STATE OF WASHINGTON, REGISTERED PROFESSIONAL ENGINEER, EXPIRES 1/17/93

9-9-92

SR 405
NORTHUP TO BOTHEL
HOV AND SC&DI-STAGE 1
BNRR OVERCROSSING 405/56E

PIER 1

BRIDGE SHEET NO. 4
SHEET 367 OF 474 SHEETS

SR 405 JOB NO. 7042 SHEET 4

SR405/408

207/205

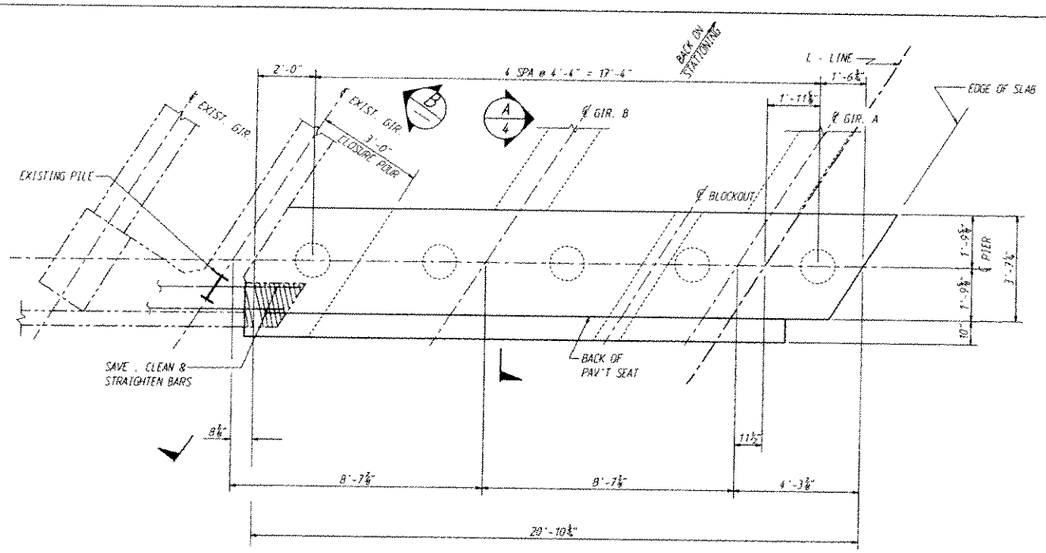

PLAN

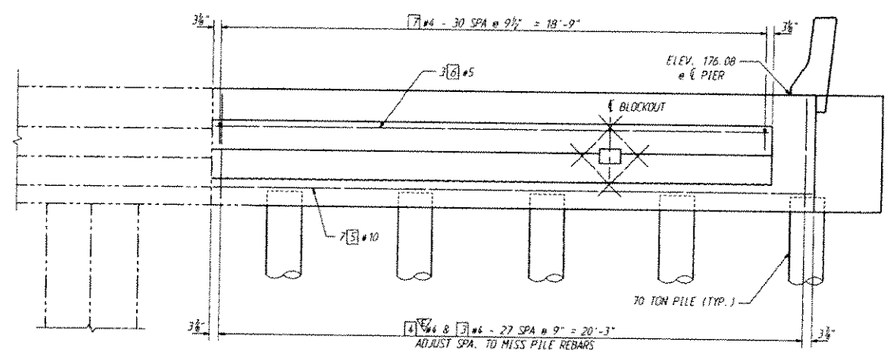

ELEVATION

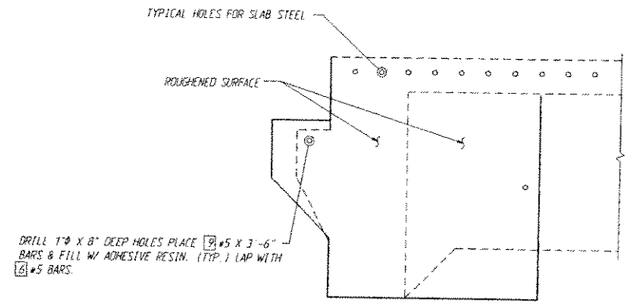

VIEW B

DASH LINES INDICATE EXIST. SOLID OVERLAYED LINES INDICATE NEW CONSTRUCTION.

VIEW B THIS SHT. FOR PIER 4 SHOWN
VIEW B SHT. 4 FOR PIER 1 MIRROR IMAGE

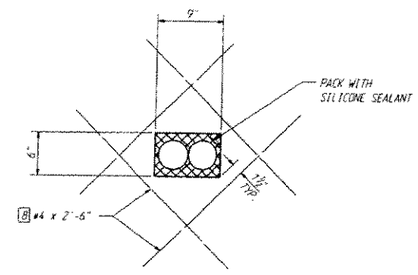

TYPICAL UTILITY BLOCKOUT

SR 405 JOB NO. 7042 SHEET 5

Bridge Design Engr. [signature] 9-92					REGION NO.	STATE	FED. AID PROJ. NO.	SHEET NO.	TOTAL SHEETS
Supervisor [signature] 9-92					10	WASH.			
Designed By M. SHEIKHIZADEH 9/92					JOB NUMBER		I-IM-405-3(791)		
Checked By J. WEI 9/92					92W070				
Detailed By J. PLESHA 8/92									
Bridge Projects Engr.									
Prelim. Plan By									
Architect/Specialist	DATE	REVISION	BY	APP'D	4/61				

BRIDGE AND STRUCTURES

9-9-92

I405_56ERODT:\FGB\PIER4.FGB:1 08-SEP-92

Washington State Department of Transportation

SR 405
NORTHUP TO BOTHEL
HOV AND SC&DI-STAGE 1
BNRR OVERCROSSING 405/56E

PIER 4

BRIDGE SHEET NO. 5

SHEET 368 OF 474 SHEETS

SR405/408

207/204

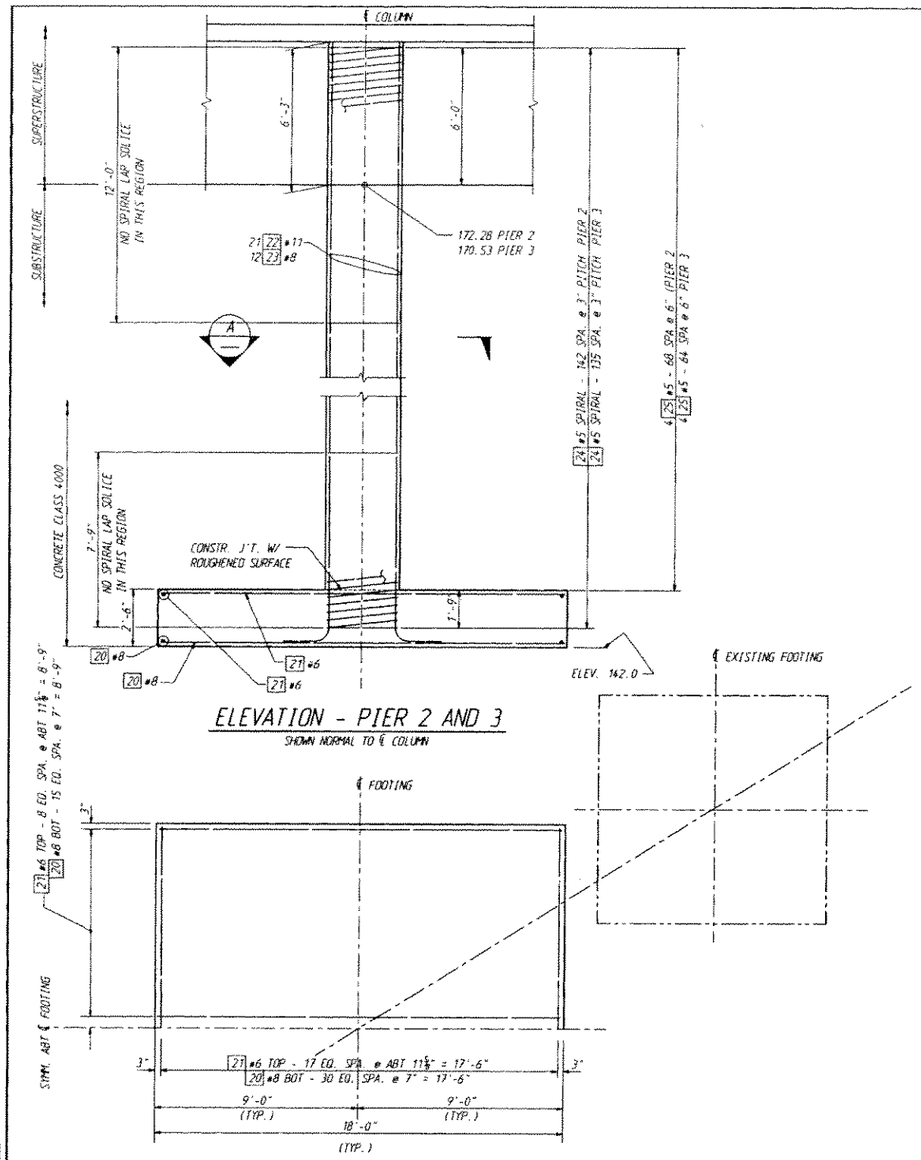

ELEVATION - PIER 2 AND 3

SHOWN NORMAL TO ℄ COLUMN

HALF FOOTING PLAN

PIERS 2 AND 3

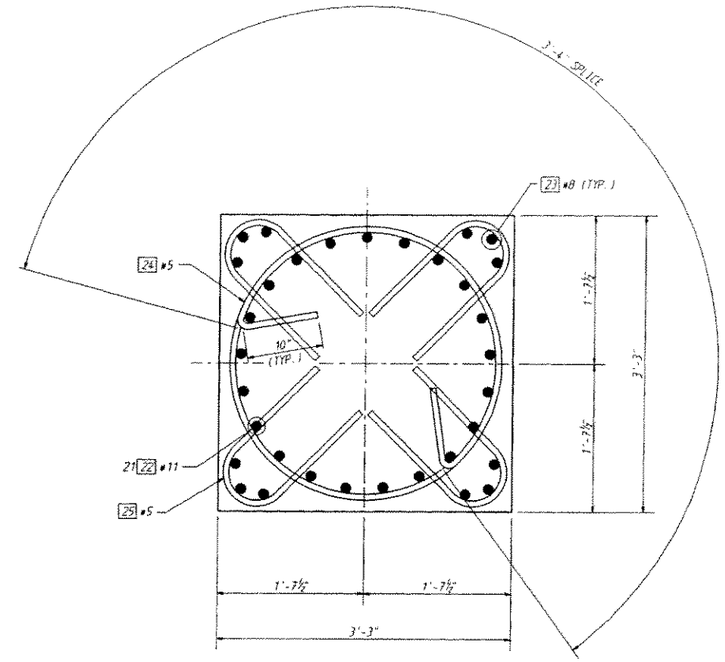

SECTION A

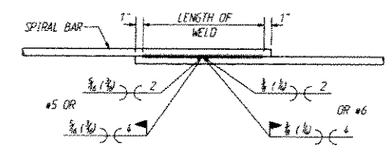

ALTERNATE WELDED LAP SPLICE DETAIL

Bridge Design Engr.					REGION NO.	STATE	FED. AID PROJ. NO.	SHEET NO.	TOTAL SHEETS	BRIDGE AND STRUCTURES
Supervisor					10	WASH.	I-IM-405-3(79)			
Designed By M. SHEIKHZADEH 8/92					JOB NUMBER 92W070					
Checked By J.S. WEI 8/92										
Detailed By J. PLESHA 8/92										
Bridge Projects Engr.										
Prelim. Plan By										
Architect/Specialist	DATE	REVISION	BY	APP'D	4161					

M. HYINT LWIN STATE OF WASHINGTON 13613 REGISTERED PROFESSIONAL ENGINEER EXPIRES 1/17/93 9-9-92

I405_56EROOT (FGB)\PIER2_3.FGB, 1 08-SEP-92

Washington State Department of Transportation

SR 405
NORTHUP TO BOTHEL
HOV AND SC&DI-STAGE 1
BNRR OVERCROSSING 405/56E

PIERS 2 & 3

BRIDGE SHEET NO. 6

SHEET 369 OF 474 SHEETS

SR 405/408

207/293

SR 405 JOB NO. 7042 SHEET 6

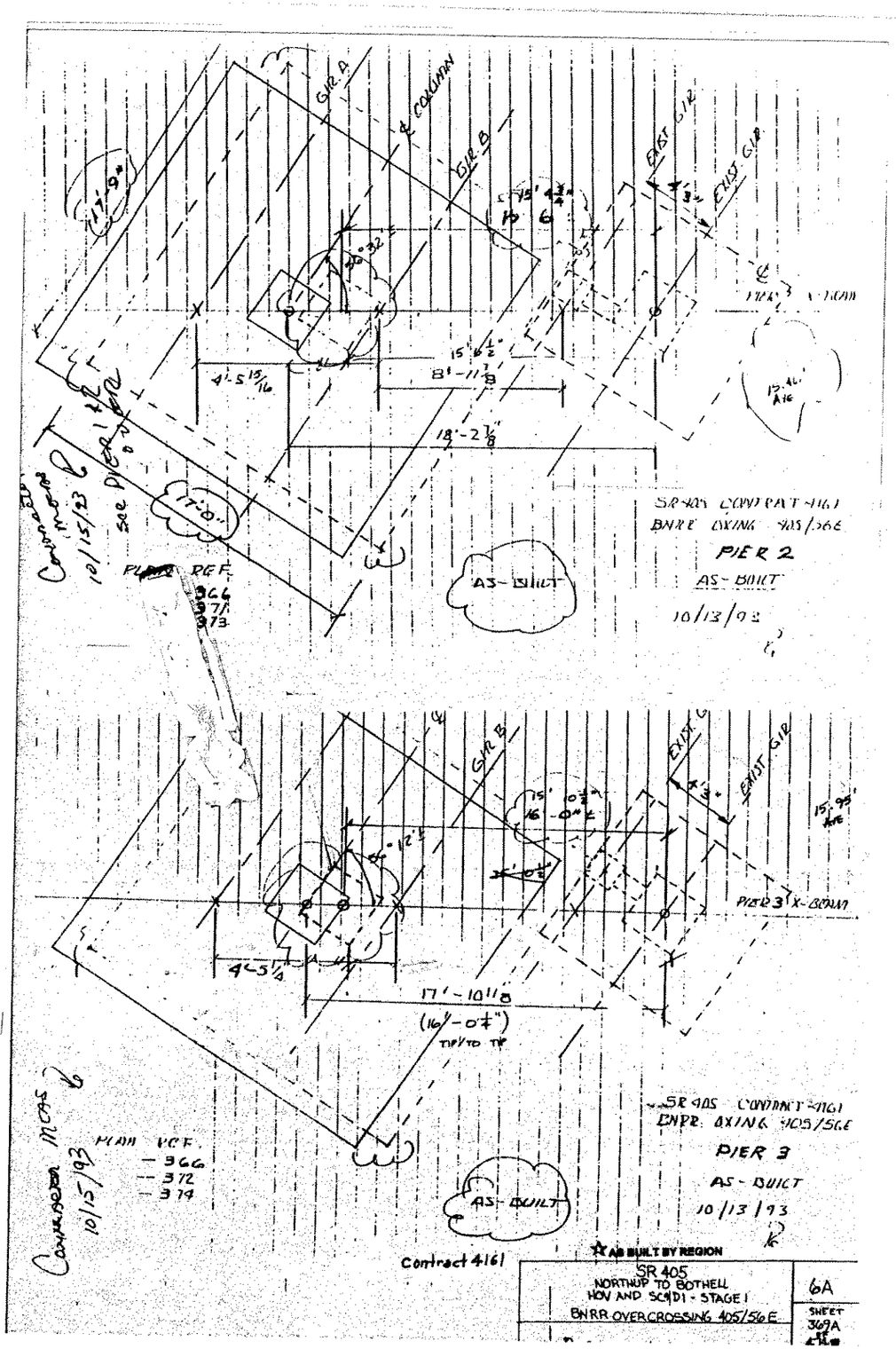

GIR. A
℄ COLUMN
GIR. B
EXIST. GIR.
EXIST. GIR.
17'-9"
15'-4 3/4"
15'-6"
15'-6 1/2"
8'-11 7/8"
4'-5 15/16
18'-2 7/8"
17'-0"
PLAN REF.
366
371
373
AS-BUILT
SR 405 CONTRACT 4161
BNRR OXING 405/56E
PIER 2
AS-BUILT
10/13/93
Conversion Meas
10/15/93
See Pier 1 & 2 over
GIR. B
EXIST. GIR.
EXIST. GIR.
15'-0 1/2"
16'-0"
15'-95"
PIER 3 X-BEAM
4'-5 1/4
17'-10 1/8
(16'-0 1/4")
TIP TO TIP
PLAN REF.
366
372
374
AS-BUILT
SR 405 CONTRACT 4161
BNRR OXING 405/56E
PIER 3
AS-BUILT
10/13/93
Conversion Meas
10/15/93
Contract 4161
AS BUILT BY REGION
SR 405
NORTHUP TO BOTHELL
HOV AND SC&DI - STAGE I
BNRR OVERCROSSING 405/56E
6A
SHEET
369A

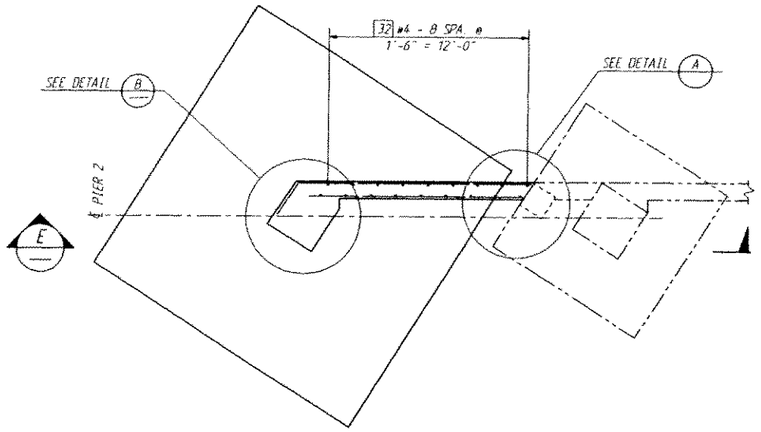

PLAN

CRASH WALL EXTENSION FOR PIER 2
SHOWN. PIER 3 MIRROR IMAGE

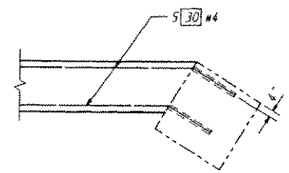

DETAIL A

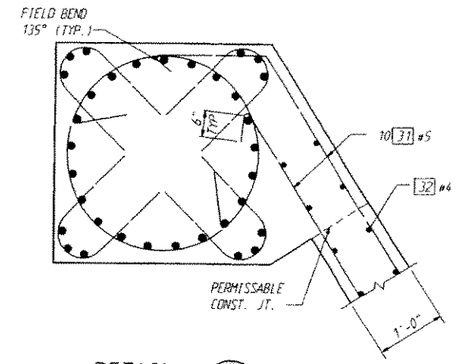

DETAIL B

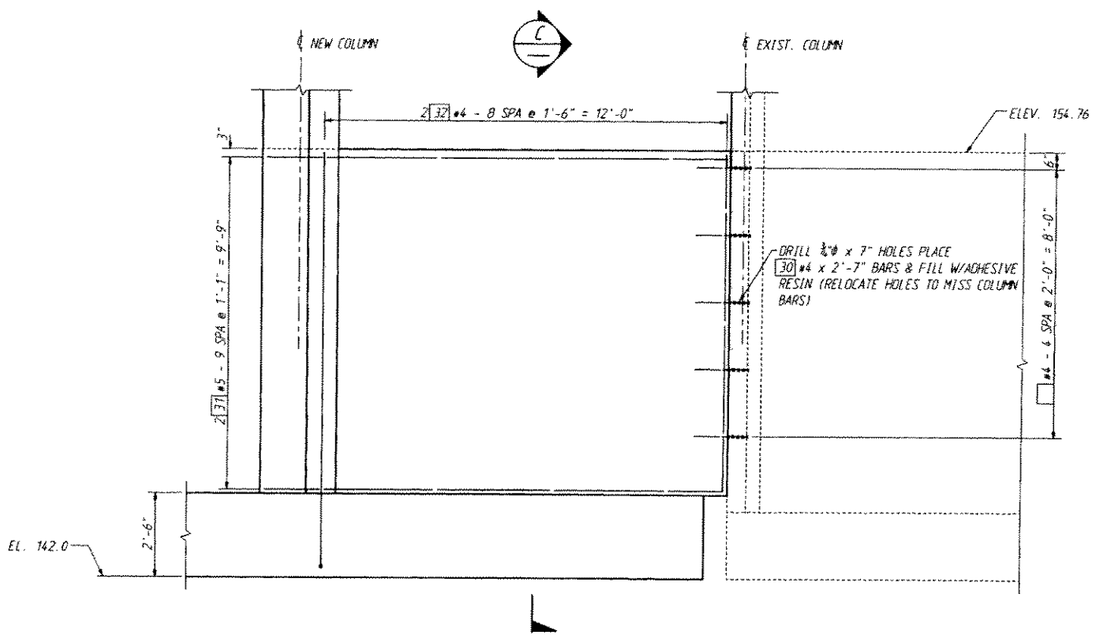

VIEW E

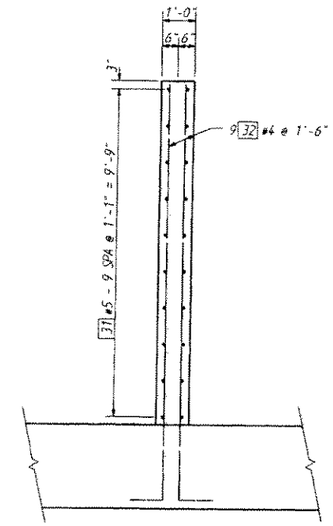

SECTION C

SR 405 JOB NO. 7042 SHEET 7

Bridge Design Engr. Myun Hwi 9-92					REGION NO.	STATE	FED. AID PROJ. NO.	SHEET NO.	TOTAL SHEETS
Supervisor Yeehan 9-92					10	WASH.			
Designed By M. SHEKHTZADEH 8/92									
Checked By J.S. WEI 8/92									
Detailed By J. PLESHA 8/92					JOB NUMBER				
Bridge Projects Engr.					92W070		I-IM-405-3(791)		
Prelim. Plan By									
Architect/Specialist	DATE	REVISION	BY	APP'D	4161				

BRIDGE AND STRUCTURES

M. KYINT LWIN
STATE OF WASHINGTON
13616
REGISTERED PROFESSIONAL ENGINEER
9-9-92
EXPIRES 1/17/93

I405_56EROOT.(FGB)CRASH.FGB:1 08-SEP-92

Washington State
Department of Transportation

SR 405
NORTHUP TO BOTHEL
HOV AND SC&DI-STAGE 1
BNRR OVERCROSSING 405/56E

CRASH WALL

BRIDGE SHEET NO. 7

SHEET 370 OF 474 SHEETS

SR405/408

2/7/2002

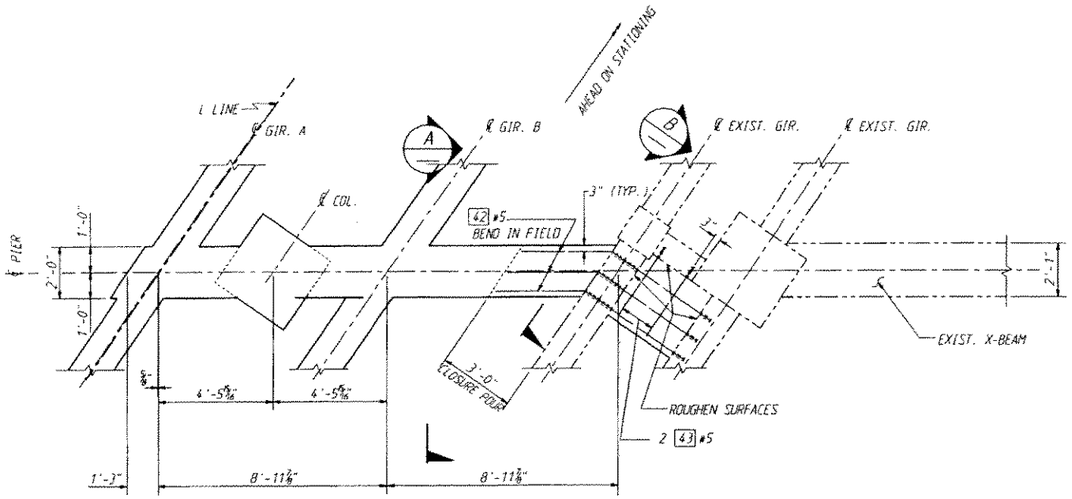

PLAN

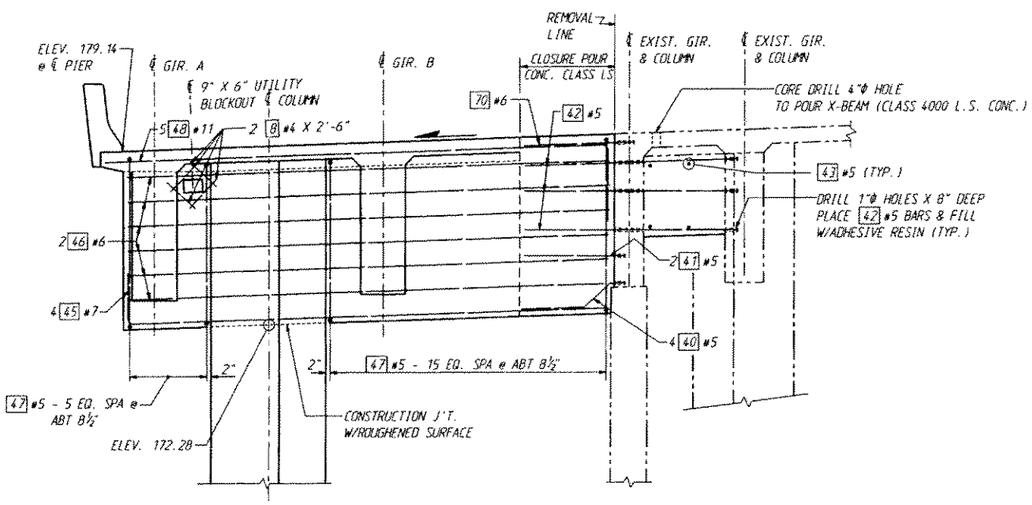

ELEVATION
AT ℄ PIER

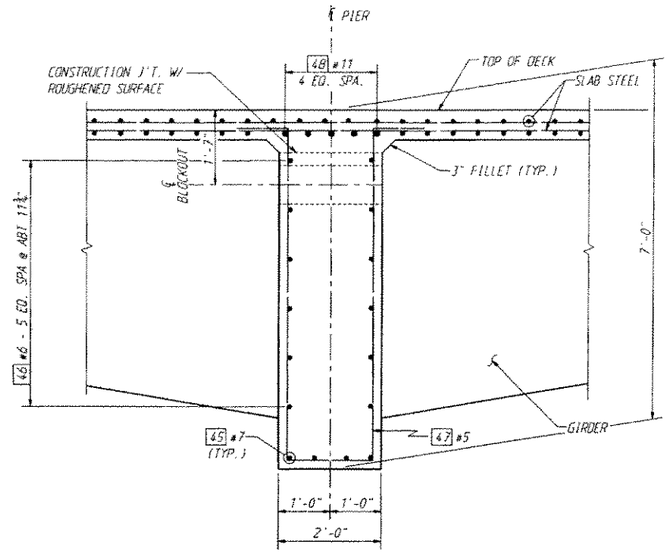

SECTION A

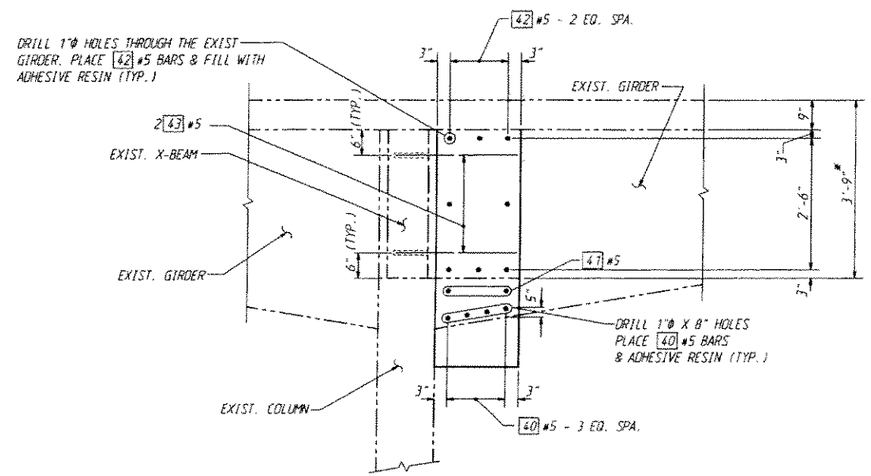

VIEW B

* DIMENSION TO MATCH THE EXIST. X-BEAM HEIGHT.

SR 405 JOB NO. 7042 SHEET 8

Bridge Design Engr. M. Hyint Lwin 9-92					REGION NO.	STATE	FED. AID PROJ. NO.	SHEET NO.	TOTAL SHEETS
Supervisor Y. Chan 9.92					10	WASH.	I-IM-405-3(791)		
Designed By M. SHEIKHIZADEH 9/92					JOB NUMBER 92W070				
Checked By J. WEI 9/92									
Detailed By J. PLESHA 9.92									
Bridge Projects Engr.									
Prelim. Plan By									
Architect/Specialist	DATE	REVISION	BY	APP'D	4161				

BRIDGE AND STRUCTURES

M. HYINT LWIN — STATE OF WASHINGTON — REGISTERED PROFESSIONAL ENGINEER — EXPIRES 1/17/93 — 9-9-92

I405_56EROOT:(FGB)PIER2.FGB:1 08-SEP-92

Washington State Department of Transportation

SR 405
NORTHUP TO BOTHEL
HOV AND SC&DI-STAGE 1
BNRR OVERCROSSING 405/56E

PIER 2 X-BEAM

BRIDGE SHEET NO. 8
SHEET 371 OF 474 SHEETS

SA405/408

207/201

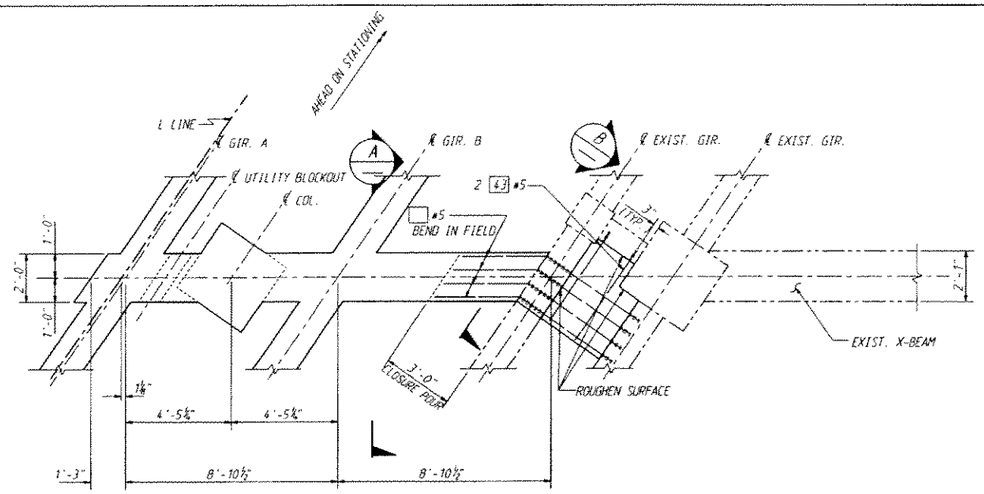

PLAN - PIER 3

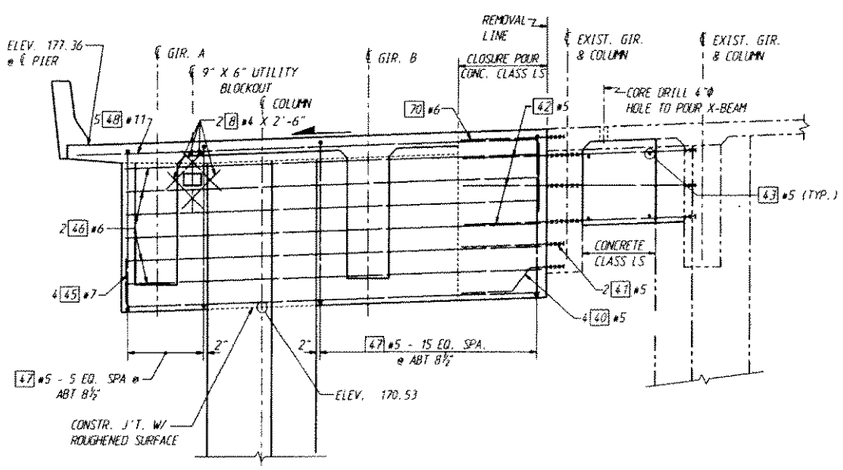

ELEVATION - PIER 3

AT ℄ PIER

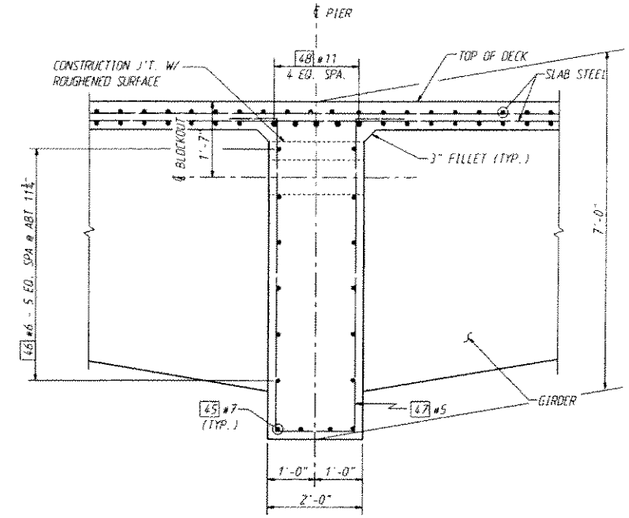

SECTION A

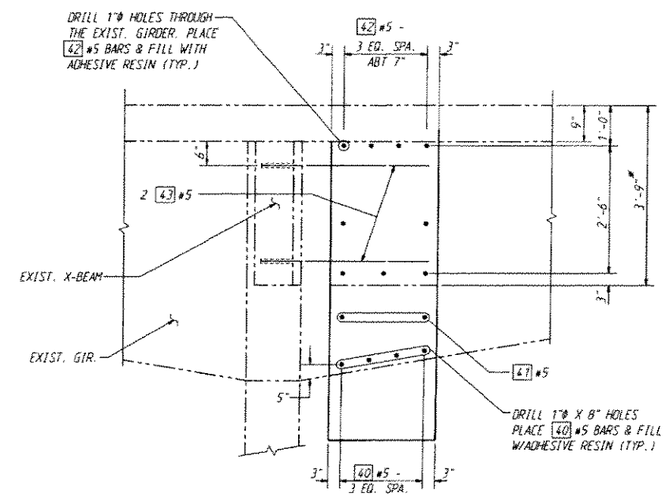

VIEW B

*DIMENSIONS TO MATCH THE EXIST. X-BEAM HEIGHT.

SR 405 JOB NO. 7042 SHEET 9

Bridge Design Engr. Myint Lwin 9-92					REGION NO.	STATE	FED. AID PROJ. NO.	SHEET NO.	TOTAL SHEETS	BRIDGE AND STRUCTURES
Supervisor Y.F. Chan 9-92					10	WASH.				
Designed By M. SHEIKHIZADEH 9/92					JOB NUMBER 92W070		I-IM-405-3(791)			
Checked By J. WEI 9/92										
Detailed By J. PLESHA 9.92										
Bridge Projects Engr.										
Prelim. Plan By										
Architect/Specialist	DATE	REVISION	BY	APP'D	4161					

M. MYINT LWIN — STATE OF WASHINGTON — REGISTERED PROFESSIONAL ENGINEER — 9-9-92 — EXPIRES 1/11/93

1405_56EROOT:(FGB)PIER3.FGB:1 01-SEP-92

Washington State Department of Transportation

SR 405
NORTHUP TO BOTHEL
HOV AND SC&DI-STAGE 1
BNRR OVERCROSSING 405/56E

PIER 3 X-BEAM

BRIDGE SHEET NO. 9

SHEET 372 OF 474 SHEETS

SR405/408

207/200

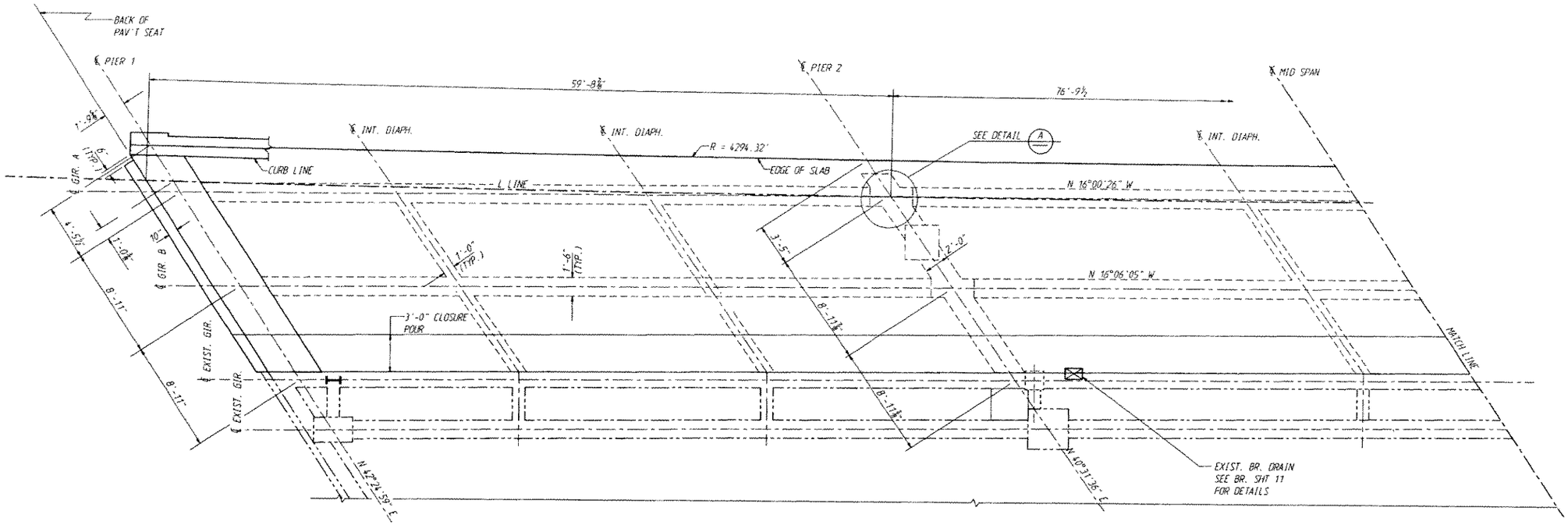

PART FRAMING PLAN

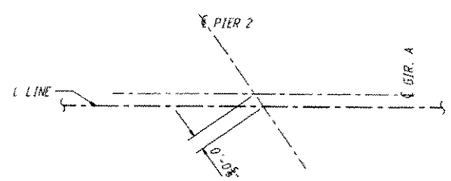

DETAIL A

GIRDER	SPAN 1	SPAN 2	SPAN 3
"A"	57'-3¾"	76'-8⅞"	58'-1⅛"
"B"	57'-0¼"	76'-9⅛"	58'-4⅜"

GIRDER LENGTHS TABLE

GIRDER LENGTHS ARE FROM ℄ TO ℄ PIERS.

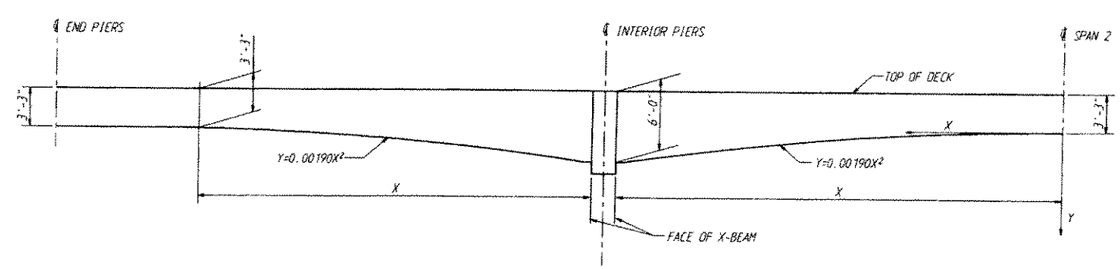

GIRDER GEOMETRY

SR 405 JOB NO. 7042 SHEET 10

Bridge Design Engr.					REGION NO.	STATE	FED. AID PROJ. NO.	SHEET NO.	TOTAL SHEETS
Supervisor					10	WASH.	I-IM-405-3(791)		
Designed By M. SHEIKHIZADEH 8/92					JOB NUMBER 92W070				
Checked By J.S. WEI 8/92									
Detailed By J. PLESHA 8/92									
Bridge Projects Engr.									
Prelim. Plan By									
Architect/Specialist	DATE	REVISION	BY	APP'D	4161				

BRIDGE AND STRUCTURES

9-9-92

1405_56EROOT:(FGB)FRAME_S.FGB:1 01-SEP-92

Washington State Department of Transportation

SR 405
NORTHUP TO BOTHEL
HOV AND SC&DI-STAGE 1
BNRR OVERCROSSING 405/56E

PART FRAMING PLAN

BRIDGE SHEET NO. 10

SHEET 373 OF 474 SHEETS

SR 405/408

207/199

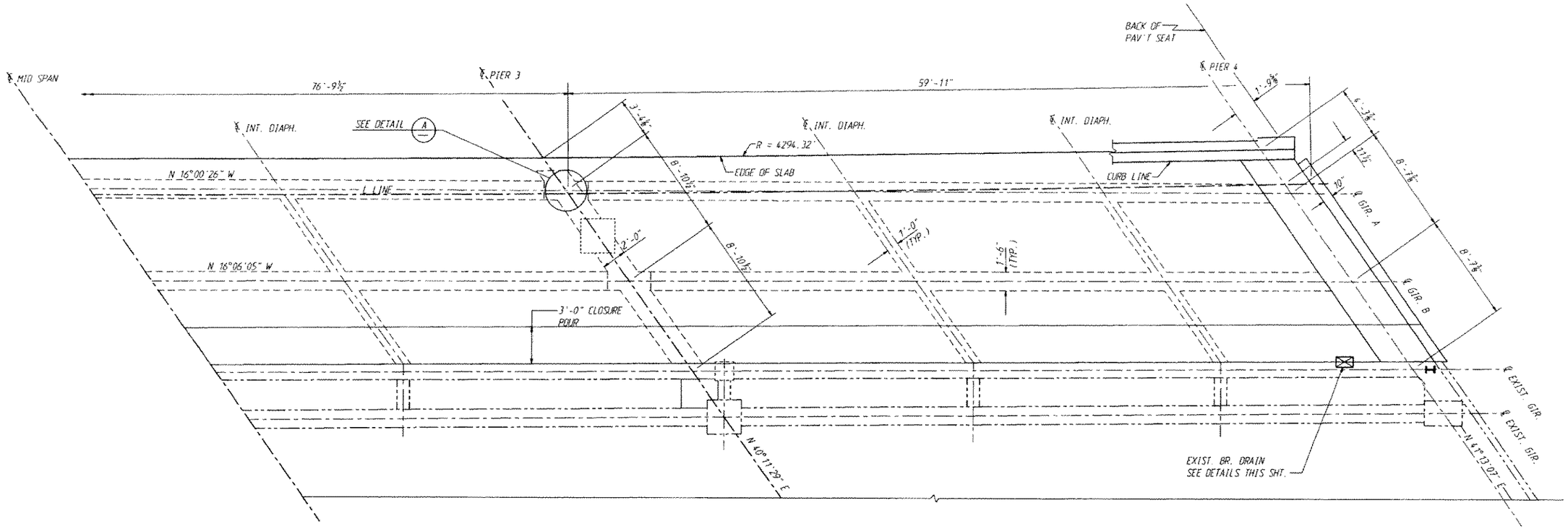

PART FRAMING PLAN

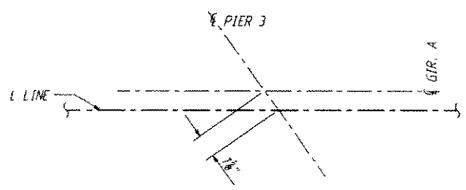

DETAIL A

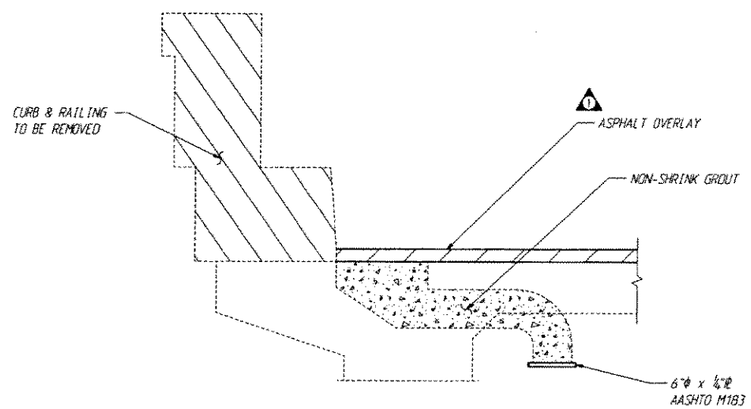

EXISTING DRAIN - PLUG DETAIL

NOTE: REMOVE DRAIN GRATE AND CHAIN COMPLETELY REMOVE ALL RUST AND SCALE FROM THE SURFACE OF THE DRAIN BASIN. AFTER FITTING AND INSTALLING 6"Ø ℞. FILL DRAIN TO TOP OF EXIST. SLAB W/ NON-SHRINK GROUT.

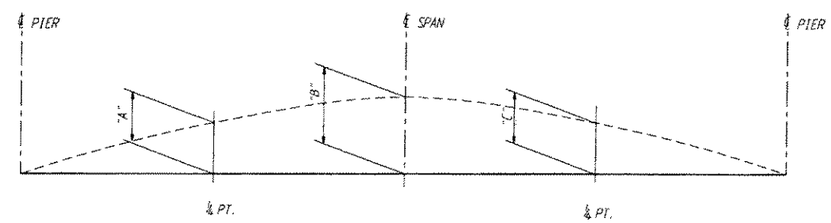

	"A"	"B"	"C"
SPAN 1	⅜"	⅜"	⅛"
SPAN 2	¼"	⅝"	¼"
SPAN 3	⅛"	⅜"	⅜"

DEAD LOAD CAMBER DEAGRAM

THIS CURVE SHOWS THE COMPUTED DEAD LOAD CAMBER ONLY AND SHOULD BE ADJUSTED BY THE AMOUNT OF PROFILE GRADE CORRECTION AND ANTICIPATED TAKE-UP IN FALSEWORK.

SR 405 JOB NO. 7042 SHEET 11

Bridge Design Engr.	1/93			
Supervisor	1-93			
Designed By M. SHEIKHIZADEH	8/92			
Checked By J. WEI	8/92			
Detailed By J. PLESHA	8/92			
Bridge Projects Engr.				
Prelim. Plan By	1/93	1 EDITORIAL CHANGE	JW	
Architect/Specialist	DATE	REVISION	BY	APP'D

REGION NO.	STATE	FED. AID PROJ. NO.	SHEET NO.	TOTAL SHEETS
10	WASH.			
JOB NUMBER				
4161				

BRIDGE AND STRUCTURES

9-9-92

M. MYINT LWIN — STATE OF WASHINGTON — 10626 — REGISTERED PROFESSIONAL ENGINEER — EXPIRES 1/17/93

I405_56EROOT:[FGB]FRAME_N.FGB:1 25-JAN-93

Washington State Department of Transportation

SR 405
NORTHUP TO BOTHEL
HOV AND SCADI-STAGE 1
BNRR OVERCROSSING 405/56E

PART FRAMING PLAN

BRIDGE SHEET NO. 11

SHEET 374 OF 474 SHEETS

SR405/408

207/198

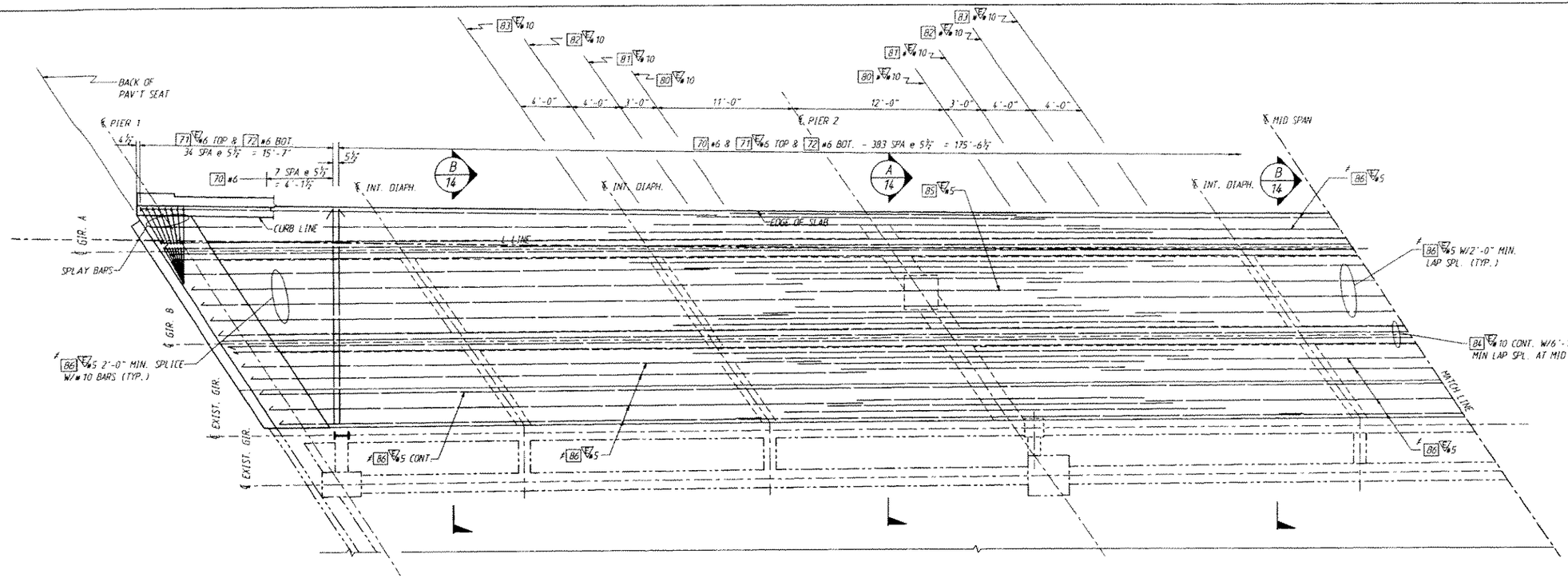

PART FRAMING PLAN

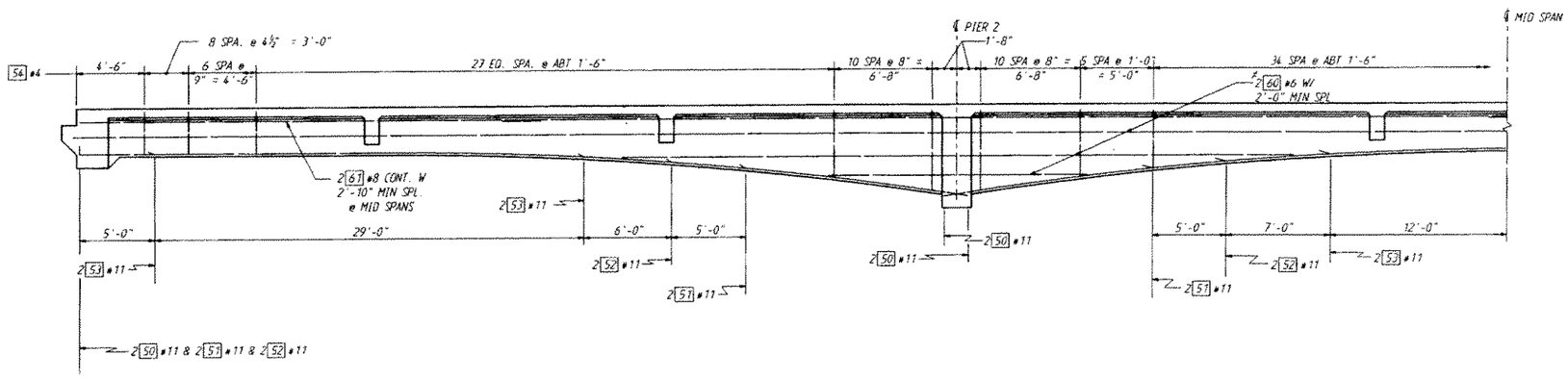

TYPICAL GIRDER PART ELEVATION

DECK STEEL NOT SHOWN.

INDICATES EPOXY COATED BAR.
NUMBER & LOCATION OF SPLICES ARE OPTIONAL.

SR 405 JOB NO. 7042 SHEET 12

Bridge Design Engr.					REGION NO.	STATE	FED. AID PROJ. NO.	SHEET NO.	TOTAL SHEETS	BRIDGE AND STRUCTURES
Supervisor					10	WASH.	I-IM-405-3(791)			
Designed By M. SHEIKHIZADEH 9/92					JOB NUMBER 92W070					
Checked By J. WEI 9/92					4161					
Detailed By J. PLESHA 8/92										
Bridge Projects Engr.										
Prelim. Plan By										
Architect/Specialist	DATE	REVISION	BY	APP'D						

M. HYINT LWIN, STATE OF WASHINGTON, REGISTERED PROFESSIONAL ENGINEER, EXPIRES 1/17/93 — 9-9-92

I405_56EROOT:[FGB]SLAB_S.FGB:1 08-SEP-92

Washington State Department of Transportation

SR 405
NORTHUP TO BOTHEL
HOV AND SC&DI-STAGE 1
BNRR OVERCROSSING 405/56E

PART. SLAB PLAN

BRIDGE SHEET NO. 12
SHEET 375 OF 474 SHEETS

SA405/408 2/7/92

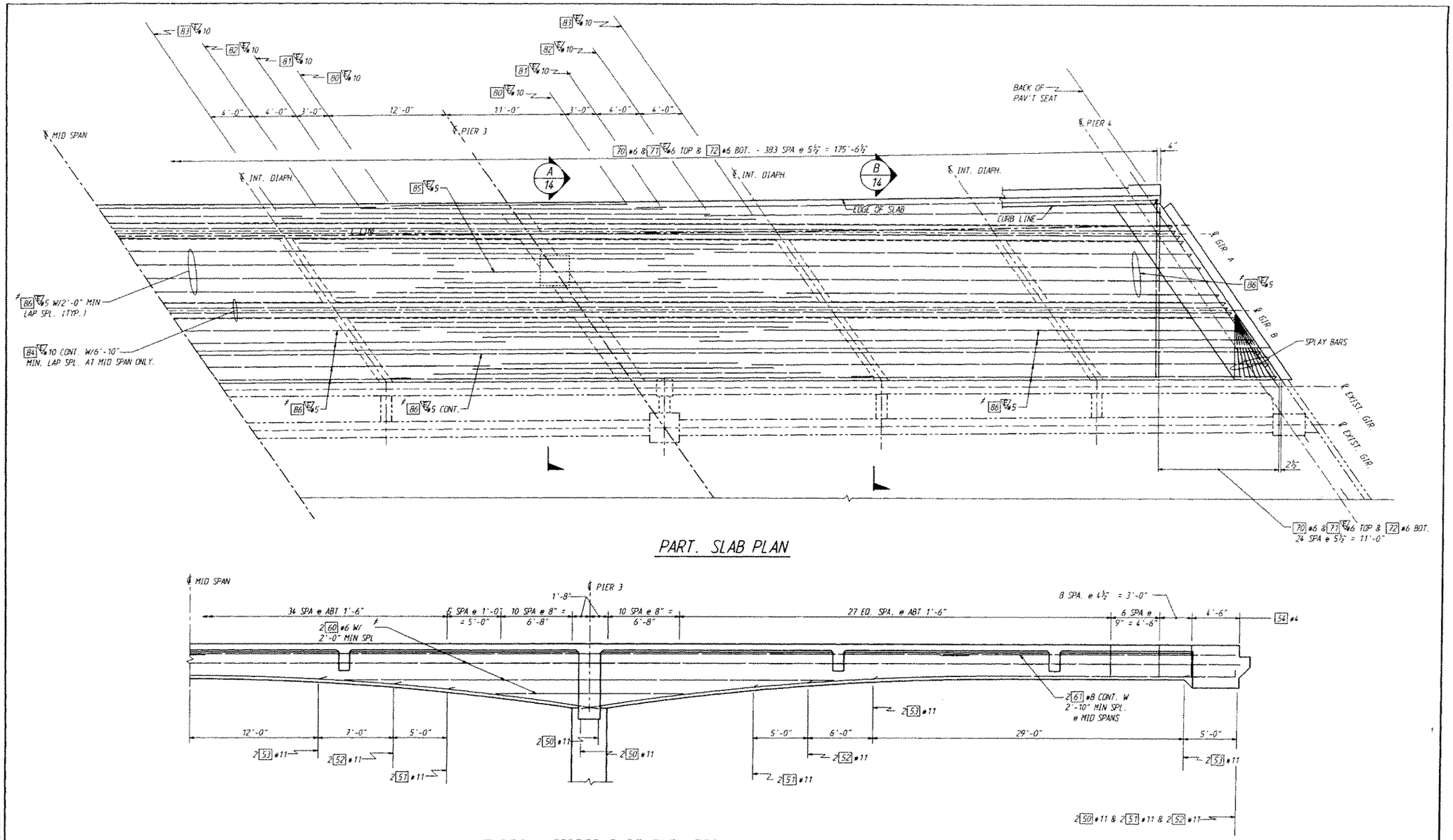

PART. SLAB PLAN

TYPICAL GIRDER PART ELEVATION

DECK STEEL NOT SHOWN.

INDICATES EPOXY COATED BAR.
NUMBER & LOCATION OF SPLICES ARE OPTIONAL.

Bridge Design Engr.					REGION NO.	STATE	FED. AID PROJ. NO.	SHEET NO.	TOTAL SHEETS
Supervisor					10	WASH.			
Designed By M. SHEIKHIZADEH 9/92					JOB NUMBER 92W070		I-IM-405-3(791)		
Checked By J. WEI 9/92									
Detailed By J. PLESHA 8/92									
Bridge Projects Engr.									
Prelim. Plan By									
Architect/Specialist	DATE	REVISION	BY	APP'D	4161				

BRIDGE AND STRUCTURES

9-9-92

I405_56ERDOT:\FGB\SLAB_N.FGB:1 08-SEP-92

Washington State Department of Transportation

SR 405
NORTHUP TO BOTHEL
HOV AND SC&DI-STAGE 1
BNRR OVERCROSSING 405/56E

PART. SLAB PLAN

BRIDGE SHEET NO. 13

SHEET 376 OF 474 SHEETS

SR 405 JOB NO. 7042 SHEET 13

SR405/408

207/146

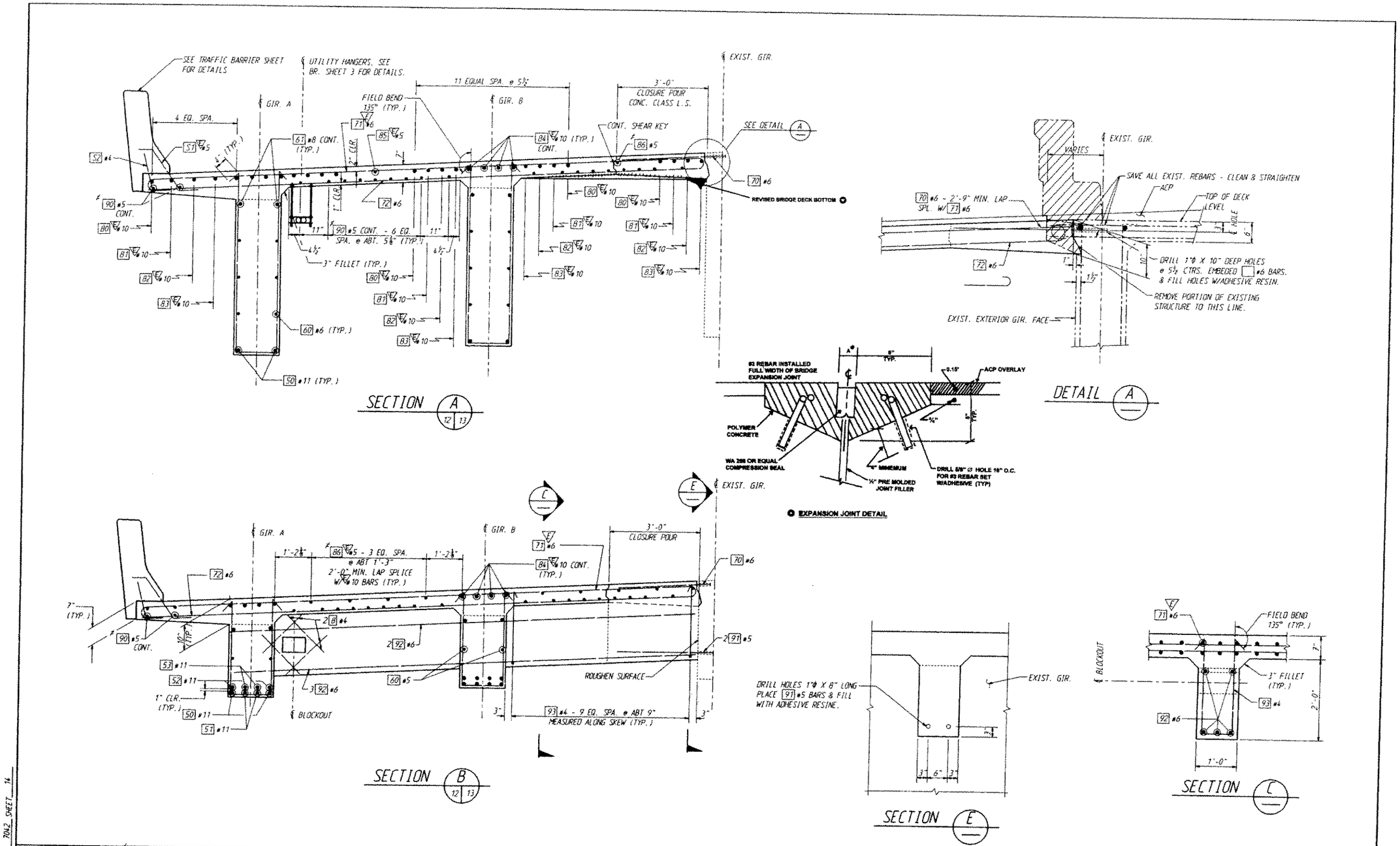

Bridge Design Engr.					REGION NO.	STATE	FED. AID PROJ. NO.	SHEET NO.	TOTAL SHEETS
Supervisor					10	WASH.	I-IM-405-3(791)		
Designed By M. SHEIKHIZADEH 9/92					JOB NUMBER 92W070				
Checked By J. WEI 8/92									
Detailed By J. PLESHA 8/92									
Bridge Projects Engr.									
Prelim. Plan By									
Architect/Specialist	DATE	REVISION	BY	APP'D	4/61				

BRIDGE AND STRUCTURES

9-9-92

I405_56EROOT:(FGB)SECTION.FGB:1 01-SEP-92

Washington State Department of Transportation

AS BUILT CHANGES (3-25-98)

SR 405
NORTHUP TO BOTHEL
HOV AND SC&DI-STAGE 1
BNRR OVERCROSSING 405/56E

TYPICAL SECTIONS

BRIDGE SHEET NO. 14

SHEET 377 OF 474 SHEETS

SR 405 JOB NO. 7042 SHEET 14

SR 405/408

207/195

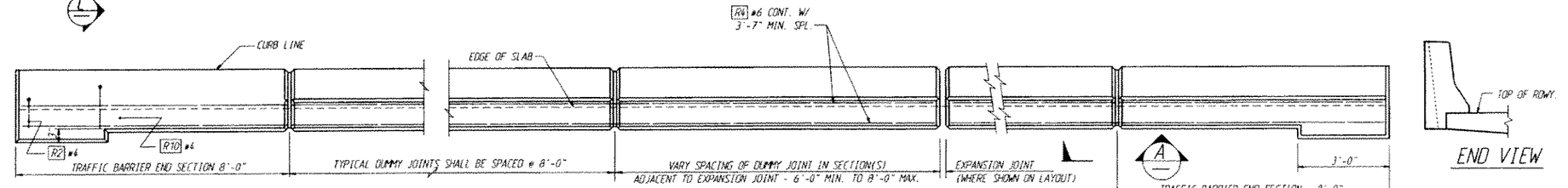

PLAN
TRAFFIC BARRIER

BARRIER CONTINUOUS BETWEEN ROADWAY EXPANSION JOINTS. CONSTRUCTION JOINTS WITH SHEAR KEYS ARE PERMISSIBLE AT DUMMY JOINT LOCATIONS. FORM JOINTS BETWEEN DUMMY JOINTS SHALL NOT BE PERMITTED.

END VIEW

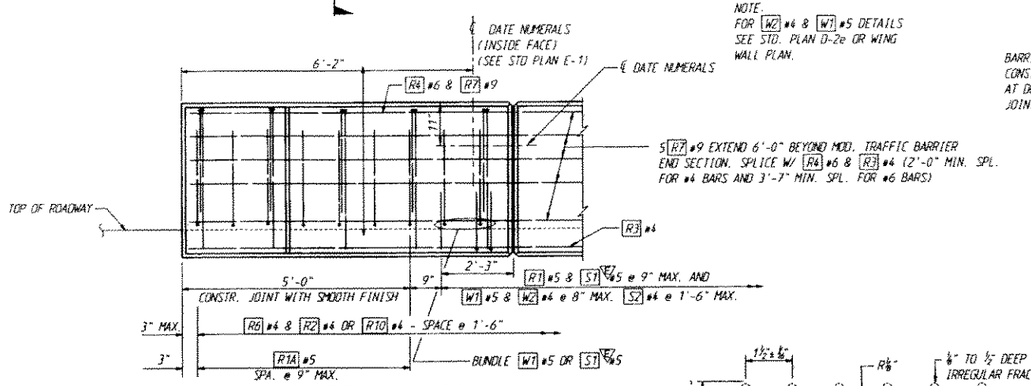

NOTE:
FOR W2 #4 & W1 #5 DETAILS SEE STD. PLAN D-2e OR WING WALL PLAN.

OUTSIDE ELEVATION
END OF MODIFIED TRAFFIC BARRIER FOR DESIGN F GUARDRAIL ANCHORAGE

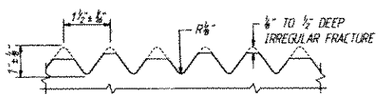

FRACTURED FIN FINISH

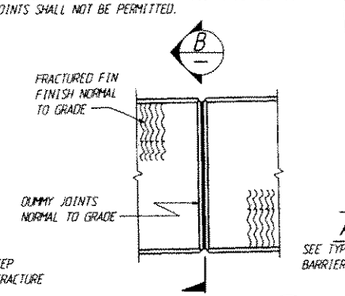

VIEW A

ALL CHAMFERS ¼".
SEE "LAYOUT" FOR APPLICABLE SURFACE FINISH.

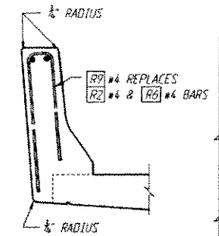

SLIPFORM ALTERNATE

SEE TYPICAL SECTION - TRAFFIC BARRIER FOR ADDITIONAL DETAILS

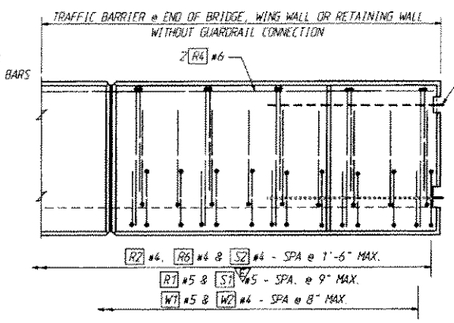

WIRE ROPE LOOP DETAIL SEE STD. PLAN C-8a.

OUTSIDE ELEVATION
END OF TRAFFIC BARRIER

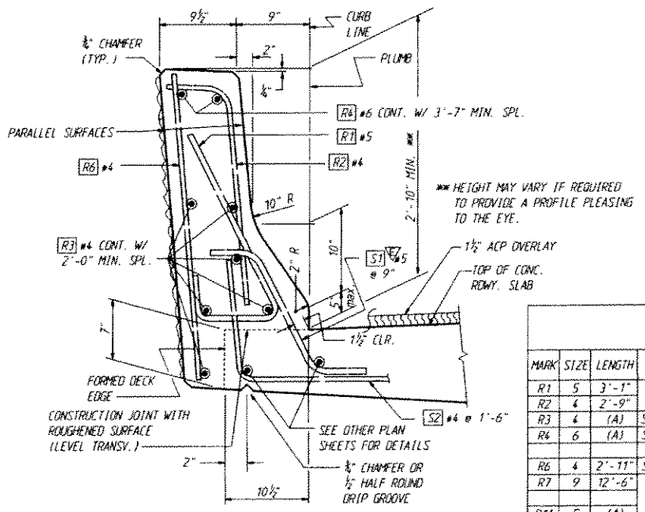

TYPICAL SECTION - TRAFFIC BARRIER

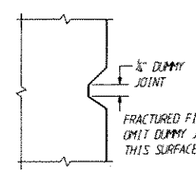

SECTION 2-2

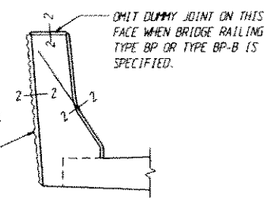

SECTION B

TRAFFIC BARRIER BAR LIST

ALL REINFORCING SHALL BE AASHTO M31, GR. 60.

MARK	SIZE	LENGTH	
R1	5	3'-1"	
R2	4	2'-9"	
R3	4	(A)	STR.
R4	6	(A)	STR.
R6	4	2'-11"	STR.
R7	9	12'-6"	
R1A	5	(A)	
R9	4	5'-6"	
R10	6	3'-2"	

BENDING DIAGRAM (ALL DIMENSIONS ARE OUT TO OUT)

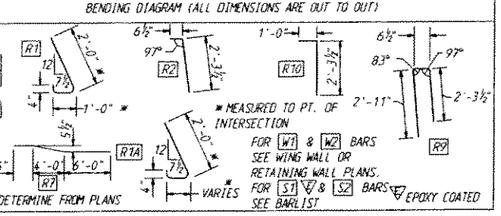

(A) DETERMINE FROM PLANS

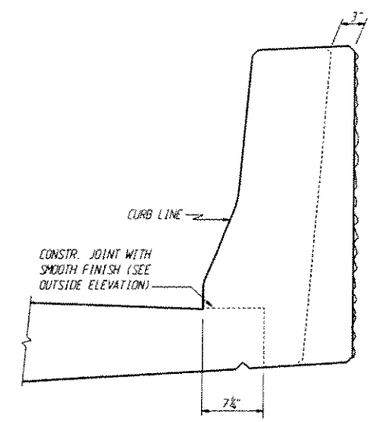

BRIDGE C SECTION

DETAIL FOR BRIDGE
FOR DETAILS NOT SHOWN SEE "OUTSIDE ELEVATION" AND "TYPICAL SECTION - TRAFFIC BARRIER"

Bridge Design Engr.				
Supervisor				
Designed By M. SHEIKHZADEH 8/92				
Checked By J.S. WEI 8/92				
Detailed By J. PLESHA 8/92				
Bridge Projects Engr.				
Prelim. Plan By				
Architect/Specialist	DATE	REVISION	BY	APP'D

REGION NO.	STATE	FED. AID PROJ. NO.	SHEET NO.	TOTAL SHEETS
10	WASH.	I-IM-405-3(791)		
JOB NUMBER 92W070				
4161				

BRIDGE AND STRUCTURES

H. WYNT LEWIS, STATE OF WASHINGTON, REGISTERED PROFESSIONAL ENGINEER, EXPIRES 1/17/93
9-9-92

I405_S6EROOT (FGB)TB.FGB, 1 29-AUG-92

Washington State Department of Transportation

SR 405
NORTHUP TO BOTHEL
HOV AND SC&DI-STAGE 1
BNRR OVERCROSSING 405/56E

TRAFFIC BARRIER

BRIDGE SHEET NO. 15
SHEET 378 OF 474 SHEETS

SR 405 JOB NO. 7042 SHEET 15

SR405/408

207/194

S = Bar is included in substructure quantities.
F = Bar to be field welded.
T = Tie or Stirrup.
E = Bar is to be epoxy coated.
V = Bar dimensions vary between dimensions shown on this line and the following line.

MARK NO.	LOCATION	SIZE	NO REQ'D	BEND TYPE	TIE OR STIR	FLD. WELD	SUBSTR.	EPOXY COAT	VARIES	NO. EACH	U Ft.	U In.	W Ft.	W In.	X Ft.	X In.	Y Ft.	Y In.	Z Ft.	Z In.	θ1 Deg	θ2 Deg	LENGTH Ft.	LENGTH In.	WEIGHT Lbs.
	PIER 1																								
1	PILE VERT	9	35	51			S				33	9.0											35	0.	4165
2	PILE SPIRAL	4	5	67			S					10.5		3.0							132		347	2.	1160
3	PILE CAP TIES VERT	4	29	61	T						4	0.0	3	2.0	3	2.0		0.0		0.0			10	2.	197
4	PILE CAP TIES HORZ	4	29	56	T			E			4	1.0											4	8.	90
5	PILE CAP HORZ	10	7	50							21	3.0											21	3.	640
6	PILE CAP HORZ	5	3	50							21	3.0											21	3.	66
7	PAVEMENT SEAT	4	32	54	T						2	6.0											2	10.	61
8	BLOCKOUT BARS	4	8	50							2	0.0											2	0.	11
9	DRILLED BARS	5	2	50							3	6.0											3	6.	7
	PIER 4																								
1	PILE VERT	9	35	51			S				29	6.0											30	9.	3659
2	PILE SPIRAL	4	5	67			S					10.5		3.0							115		$	$	1010
3	PILE CAP TIES VERT	4	28	61	T						4	0.0	3	2.0	3	2.0		0.0		0.0			10	2.	190
4	PILE CAP TIES HORZ	4	28	56	T			E			4	10.0											5	5.	101
5	PILE CAP HORZ	10	7	50							20	8.0											20	8.	622
6	PILE CAP HORZ	5	3	50							20	8.0											20	8.	65
7	PAVEMENT SEAT	4	31	54	T						2	6.0											2	10.	59
8	BLOCKOUT BARS	4	8	50							2	0.0											2	0.	11
9	DRILLED BARS	5	2	50							3	6.0											3	6.	7
	PIERS 2&3																								
20	FOOTING BOT	8	124	50			S				17	9.0											17	9.	5877
21	FOOTING TOP	6	72	50			S				17	9.0											17	9.	1920
22	COLUMN VERT	11	42	54			S		V	21	36	4.0											38	0.	
											34	7.0											36	3.	8284
23	COLUMN VERT	8	24	54			S		V	4	36	4.0											37	6.	
											34	7.0											35	9.	2347
24	COLUMN SPIRAL	5	1	67	T		S				3	0.0		3.0							177		$	$	1710
25	COLUMN TIES	5	536	71	T		S				2	8.0	1	9.0	1	9.0							4	11.	2749
	CRASH WALL																								
30	DRILLED BARS	4	20	50			S				2	7.0											2	7.	35
31	HORZ	5	20	80			S		V	10	13	0.0	2	3.0		0.0					124	0	15	3.	
											12	7.0	2	3.0		0.0					124	0	14	10.	314
31	HORZ	5	20	50			S		V	10	13	6.0											13	6.	
											13	2.0											13	2.	278
32	VERT	4	4	50			S				10	0.0											10	0.	27
32	VERT	4	32	54			S				12	5.0											13	0.	278
	PIER 2 X-BEAM																								
10	DRILLED BOT	5	4	69							2	0.0		9.0		9.0		10.0		0.0			3	9.	16
41	DRILLED MID	5	2	50							3	6.0											3	6.	7
42	DRILLED THRU GIRDER	5	8	50							8	5.0											8	5.	70
43	DRILLED INTO X-BEAM	5	4	50							3	5.0											3	5.	14
45	BOT HORZ	7	4	54							18	3.0											19	3.	157
46	MID HORZ	6	12	50							18	3.0											18	3.	329
47	VERT TIES	5	22	63							2	1.0	6	5.0	6	5.0		6.0		6.0			15	5.	354
48	HORZ TOP	11	5	50							20	3.0											20	3.	538
8	BLOCKOUT BARS	4	8	50							2	6.0											2	6.	13
	PIER 3 X-BEAM																								
40	DRILLED BOT	5	4	69							2	0.0		9.0		9.0		10.0		0.0			3	9.	16
41	DRILLED MID	5	2	50							3	6.0											3	6.	7
42	DRILLED THRU GIRDER	5	9	50							8	5.0											8	5.	79
43	DRILLED INTO X-BEAM	5	4	50							3	5.0											3	5.	14
45	BOT HORZ	7	4	54							18	1.0											19	1.	156
46	MID HORZ	6	12	50							18	1.0											18	1.	326
47	VERT TIES	5	22	63							2	1.0	6	5.0	6	5.0		6.0		6.0			15	5.	354
48	HORZ TOP	11	5	50							20	1.0											20	1.	534
8	BLOCKOUT BARS	4	8	50							2	6.0											2	6.	13
	GIRDERS																								
50	BOT SPAN 1 GIR A	11	2	54							60	4.0											62	0.	659
50	BOT SPAN 1 GIR B	11	2	54							60	0.0											61	8.	655
50	BOT SPAN 3 GIR A	11	2	54							61	1.0											62	9.	667
50	BOT SPAN 3 GIR B	11	2	54							61	4.0											63	0.	669
50	BOT SPAN 2 GIR	11	4	50							79	1.0											79	1.	1681
51	BOT SPANS 1&3 GIR	11	8	54							45	0.0											46	8.	1984
51	BOT SPAN 2 GIR	11	4	50							48	0.0											48	0.	1020
52	BOT SPANS 1&3 GIR	11	8	54							40	0.0											41	8.	1771
52	BOT SPAN 2 GIR	11	4	50							38	0.0											38	0.	808
53	BOT SPANS 1&3 GIR	11	8	50							29	0.0											29	0.	1233
53	BOT SPAN 2 GIR	11	4	50							24	0.0											24	0.	510
54	STIRRUPS HAUNCHED SEGMENT	4	256	62	T				V	8	1	3.0	6	0.0	6	0.0		0.0		0.0			13	1.	
											1	3.0	3	3.0	3	3.0		0.0		0.0			7	7.	1767
54	STIRRUPS UNIFORM SEGMENT	4	82	62	T						1	3.0	3	3.0	3	3.0		0.0		0.0			7	7.	415
60	MID HORZ WEAR PIERS 2&3	6	8	50							18	0.0											18	0.	216
60	MID HORZ WEAR PIERS 2&3	6	8	50							46	0.0											46	0.	553
60	MID HORZ CONTINUOUS	6	4	50							$	$											$	$	1228
61	TOP HORZ END SPANS	8	8	50							34	0.0											34	0.	726
61	TOP HORZ NEAR PIERS 2&3	8	8	50							69	0.0											69	0.	1474
	ROADWAY SLAB																								
70	TOP TRANS DRILLED	6	419	50							3	7.0											3	7.	2255
71	TOP TRANS SPLAYED CORNER	6	8	51				E			6	0.0											6	8.	80
71	TOP TRANS SPLAYED CORNER	6	9	50				E			6	0.0											6	0.	81
71	TOP TRANS SOUTH SKEWED END	6	27	51				E	V	1	6	0.0											6	8.	
											18	1.0											18	9.	515
71	TOP TRANS NORTH SKEWED END	6	16	50				E	V	1	6	0.0											6	0.	

MARK NO.	LOCATION	SIZE	NO REQ'D	BEND TYPE	TIE OR STIR	FLD. WELD	SUBSTR.	EPOXY COAT	VARIES	NO. EACH	U Ft.	U In.	W Ft.	W In.	X Ft.	X In.	Y Ft.	Y In.	Z Ft.	Z In.	θ1 Deg	θ2 Deg	LENGTH Ft.	LENGTH In.	WEIGHT Lbs.
											17	4.0											17	4.	280
71	TOP TRANS SPAN 1	6	94	51				E	V	1	18	0.0											18	8.	
											16	11.0											17	7.	2559
71	TOP TRANS SPAN 2	6	168	51				E	V	1	16	11.0											17	7.	
											16	8.0											17	4.	4405
71	TOP TRANS SPAN 3	6	122	51				E	V	1	16	8.0											17	4.	
											17	4.0											18	0.	3237
72	BOT TRANS SPLAYED CORNERS	6	17	50							6	0.0											6	0.	153
72	BOT TRANS SOUTH SKEWED END	6	27	50					V	1	6	0.0											6	0.	
											18	1.0											18	1.	488
72	BOT TRANS NORTH SKEWED END	6	16	51					V	1	6	0.0											6	8.	
											17	4.0											18	0.	296
72	BOT TRANS SPAN 1	6	94	51					V	1	18	0.0											18	8.	
											16	11.0											17	7.	2559
72	BOT TRANS SPAN 2	6	168	51					V	1	16	11											17	7.	
											16	8.0											17	4.	4405
72	BOT TRANS SPAN 3	6	122	51					V	1	16	8.0											17	4.	
											17	4.0											18	0.	3237
80	TOP LONGIT NEAR PIERS 2&3	10	10	50				E			23	0.0											23	0.	990
81	TOP LONGIT NEAR PIERS 2&3	10	10	50				E			29	0.0											29	0.	1248
82	TOP LONGIT NEAR PIERS 2&3	10	10	50				E			37	0.0											37	0.	1592
83	TOP LONGIT NEAR PIERS 2&3	10	10	50				E			45	0.0											45	0.	1936
84	TOP LONGIT SPAN 1	10	8	51				E			32	3.0											33	8.	1159
84	TOP LONGIT SPANS 1&2,2&3	10	16	50				E			74	0.0											74	0.	5095
84	TOP LONGIT SPAN 3	10	8	51				E			32	8.0											34	1.	1173
85	TOP LONGIT NEAR PIERS 2&3	5	2	50				E			23	0.0											23	0.	48
86	TOP LONGIT SPANS 1&3	5	22	51				E			40	0.0											40	7.	931
86	TOP LONGIT	5	1	50				E			$	$											$	$	807
90	BOT LONGIT	5	5	50							$	$											$	$	4297
	INTERM DIAPHRAGM																								
91	BOT DRILLED	5	12	50							4	0.0											4	0.	50
92	BOT HORZ	6	30	50					V	10	16	0.0											16	0.	
											15	9.0											15	9.	715
93	STIRRUPS	4	120	62								11.0	2	8.0	2	8.0		0.0		0.0			6	0.	481
8	BLOCKOUT BARS	4	48	50							2	6.0											2	6.	80
S1	TRAFFIC BARRIER	5	258	69				E				10.0	1	0.0	1	5.0		6.0		0.0			2	11.	785
S2	TRAFFIC BARRIER	4	129	80							1	6.0	1	6.0		0.0		2.0		0.0	95	0	2	11.	251

STEEL REINFORCING BAR QUANTITIES NOT INCLUDED IN THIS BAR LIST

TRAFFIC BARRIER
BRIDGE GRATE INLETS
RETAINING WALL

BENDING DIAGRAMS

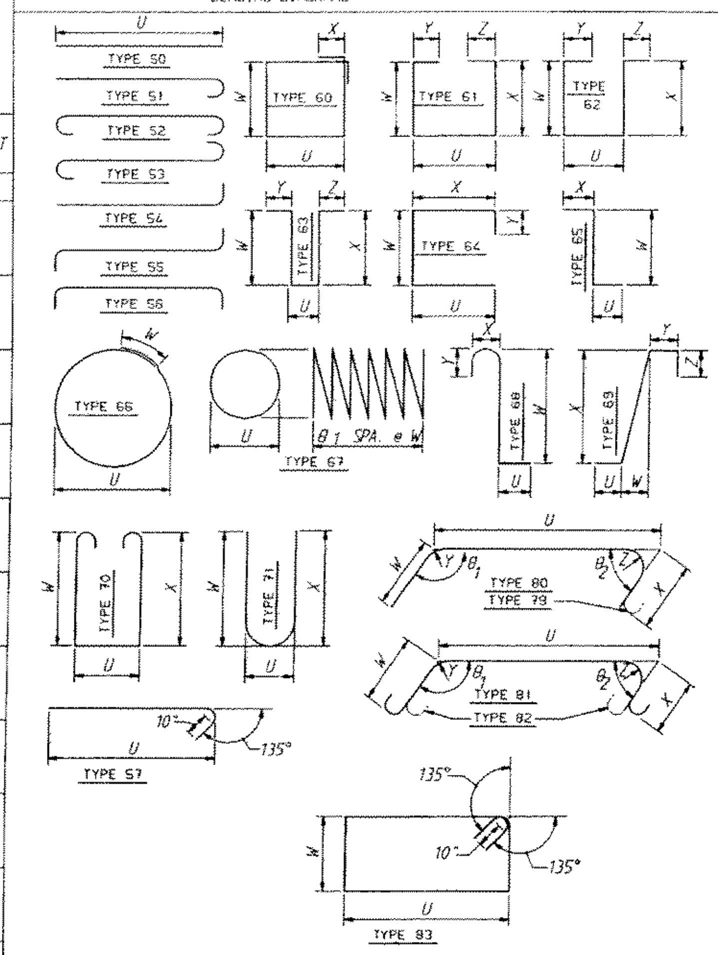

NOTE:

1. ALL REINFORCING BARS ON THIS SHEET SHALL BE AASHTO M-31 UNLESS SHOWN OTHERWISE.
2. REINFORCING FOR TRAFFIC BARRIERS NOT SHOWN IN THIS BAR LIST. SEE TRAFFIC BARRIER SHEET.
3. BEND FOR TRANSVERSE BARS DUE TO ROADWAY CROWN CONDITIONS HAVE NOT BEEN SHOWN. THESE BARS SHALL BE BENT AS REQUIRED TO CONFORM TO THE CONFIGURATION OF THE STRUCTURE.

$ NUMBER AND LENGTH OF BARS TO BE DETERMINED BY THE CONTRACTOR FROM PLANS.

SR 404 JOB NO. 7042 SHEET 16

Bridge Design Engr. [signature] 9-92			
Supervisor [signature] 9-92			
Designed By M. SHEIKHIZADEH 9/92			
Checked By J. WEI 9/92			
Detailed By J. PLESHA 9/92			
Bridge Plan. Engr.			
Prelim. Plan By			
Architect/Specialist	DATE	REVISION	BY / APP'D

REGION NO. 10 | STATE WASH. | FED. AID PROJ. NO. I-IM-405-3(791) | SHEET NO. | TOTAL SHEETS
JOB NUMBER 92W070
4161

BRIDGES AND STRUCTURES

I405_56EROOT:[FGB]BR56E_BAR.FGB;1 09-SEP-92

Washington State Department of Transportation

SR 405
NORTHUP TO BOTHEL
HOV AND SC&DI-STAGE 1
BNRR OVERCROSSING 405/56E

BARLIST

BRIDGE SHEET NO. 16
SHEET 379 OF 474 SHEETS

SR405/408 207/193

SEC. 28, T. 26 N., R. 5 E., W.M.

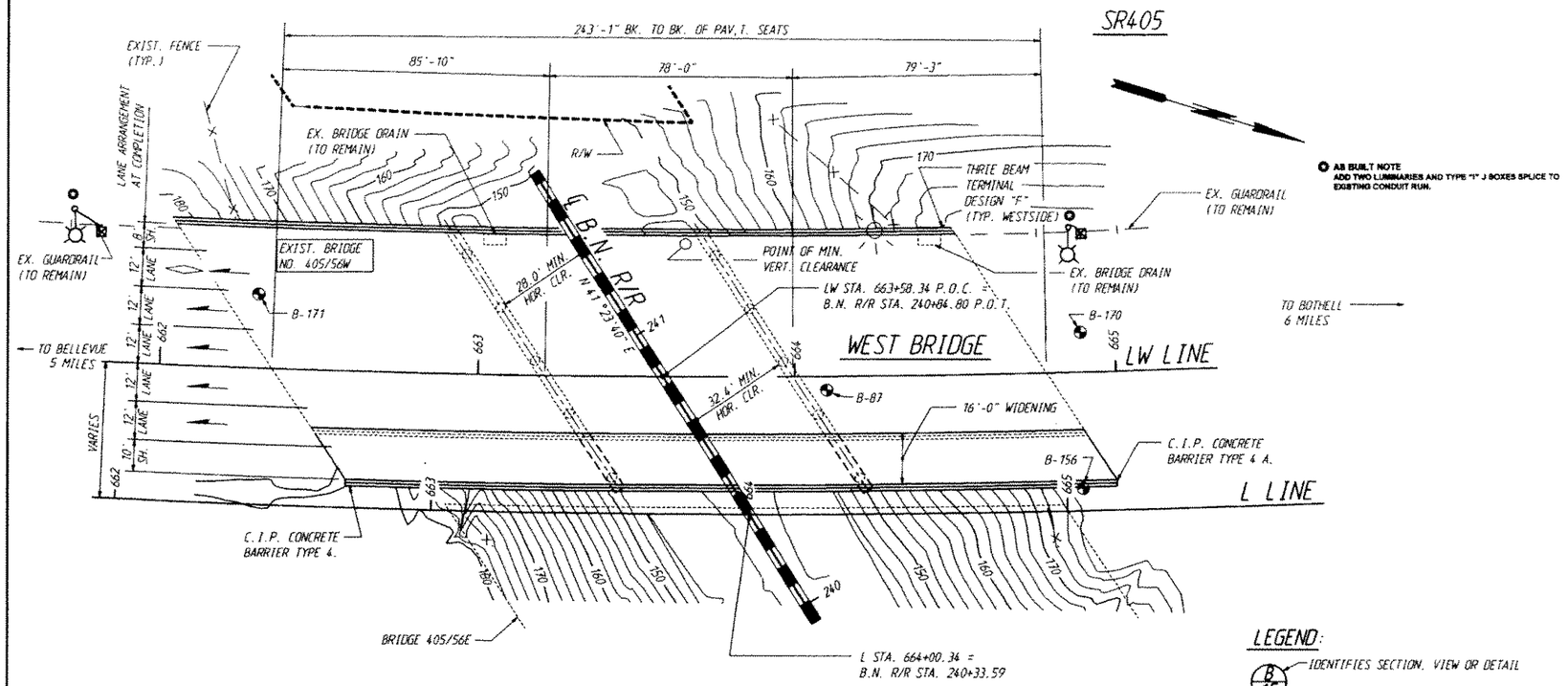

PLAN

MATCH EX. BEARINGS FOR ALL PIERS.

GENERAL NOTES

1. ALL MATERIAL AND WORKMANSHIP SHALL BE IN ACCORDANCE WITH THE REQUIREMENTS OF THE STATE OF WASHINGTON DEPARTMENT OF TRANSPORTATION'S STANDARD SPECIFICATIONS FOR ROAD, BRIDGES AND MUNICIPAL CONSTRUCTION DATED 1991.
2. THE WIDENED PORTION OF THIS STRUCTURE HAS BEEN DESIGNED IN ACCORDANCE WITH THE REQUIREMENTS OF THE 1989 AASHTO STANDARD SPECIFICATIONS FOR HIGHWAY BRIDGES WITH INTERIM SPECIFICATIONS THROUGH 1991. ALL PRESTRESSED CONCRETE ELEMENTS HAVE BEEN DESIGNED FOR SERVICE LOAD STRESSES AND CHECKED FOR THE REQUIREMENTS OF LOAD FACTOR DESIGN. ALL OTHER STRUCTURAL ELEMENTS ARE DESIGNED IN ACCORDANCE WITH THE REQUIREMENTS FOR LOAD FACTOR DESIGN.
3. SEISMIC DESIGN OF THE WIDENED PORTION OF THIS STRUCTURE CONFORMS WITH THE PROVISIONS OF THE "STANDARD SPECIFICATIONS FOR SEISMIC DESIGN OF HIGHWAY BRIDGES", DATED 1983. THE SEISMIC PERFORMANCE CATEGORY IS CAT. C AND THE ACCELERATION COEFFICIENT IS .25.
4. FOOTING ELEVATIONS AND SUBSTRUCTURE DETAILS ARE SUBJECT TO CHANGE DEPENDING UPON FOUNDATION MATERIAL ENCOUNTERED. REINFORCING STEEL FOR FOOTING, COLUMNS AND PILES SHALL NOT BE CUT UNTIL FINAL ELEVATIONS HAVE BEEN DETERMINED AND SUBSTRUCTURE DETAILS HAVE BEEN MODIFIED.
5. ELEVATIONS SHOWN ON THE PLANS ARE BASED ON AS BUILT PLANS AND FIELD SURVEY DATA. THE NEW STRUCTURE IS INTENDED TO MATCH THE EXISTING STRUCTURE. THEREFORE, ELEVATIONS GIVEN ON THE PLANS SHALL BE VERIFIED IN THE FIELD FOR COMPATIBILITY.
6. THE CONCRET IN THE CLOSURE POURS SHALL BE CLASS 4000 LS ALL OTHER CAST IN PLACE CONCRETE SHALL BE CLASS 4000.
7. THE MAXIMUM DESIGN SOIL PRESSURE PER SQUARE FOOT IS 5 TONS FOR PIERS 2 & 3. THE MAXIMUM DESIGN LOAD FOR THE PILES IS 70 TONS.
8. UNLESS OTHERWISE SHOWN ON THE PLANS, THE CONCRETE COVER MEASURED FROM THE FACE OF THE CONCRETE TO THE FACE OF ANY REINFORCING BAR SHALL BE 2" AT THE TOP OF THE ROADWAY SLAB, 1" AT THE BOTTOM OF THE ROADWAY SLAB, 2½" AT THE BOTTOM OF FOOTINGS, AND 1½" AT ALL OTHER LOCATIONS SHOWN ON THE PLANS.
9. FALSEWORK SHALL NOT BE RELEASED IN ANY SPAN UNTIL ALL CONCRETE, EXCEPT THAT IN THE CLOSURE POUR AND THE TRAFFIC BARRIER HAS BEEN IN PLACE THE REQUIRED LENGTH OF TIME AND HAS DEVELOPED SUFFICIENT STRENGTH AS OUTLINED IN THE SPECIFICATIONS. FALSEWORK SHALL BE CAREFULLY RELEASED TO PREVENT IMPACT OR UNDUE STRESSES IN THE STRUCTURE. THE CLOSURE POUR AND TRAFFIC BARRIER SHALL NOT BE POURED UNTIL THE FALSEWORK HAS BEEN RELEASED.

LEGEND:

- B/15 — IDENTIFIES SECTION, VIEW OR DETAIL
- 15 — TAKEN OR SHOWN ON BRIDGE SHEET 15
- B — TAKEN OR SHOWN ON THE SAME SHEET
- B-7 — CURRENT BORING LOCATION

DATUM

CITY OF SEATTLE

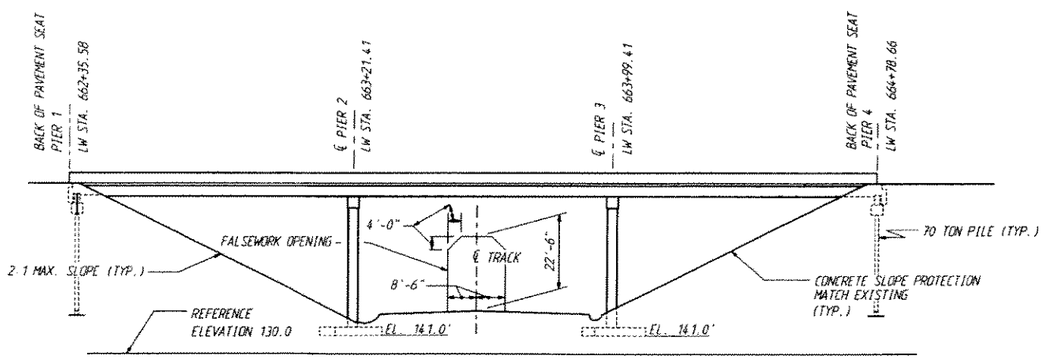

ELEVATION

FOR EMBANKMENT DETAILS, SEE STD. PLAN H-9

STATIONING FOR THE WEST BRIDGE IS CARRIED ON THE LW LINE

CURVE DATA

LW LINE		
P. I. STATION	646+82.18	657+33.82
Δ	1°20'00" LT.	26°02'07" LT.
R	8562.26	4117.88
T	99.63	952.02
L	199.25	1871.17
BK. TANGENT	N 6°55'50" E	N 5°35'50" E

P.C. STA. 645+82.55
P.C.C. STA. 647+81.80

EQUATIONS

STA. 645+82.55 LW LINE =
STA. 645+82.55 L LINE - 32' LEFT

STA. 668+17.28 BK. LW LINE =
STA. 668+35.19 AHD. LW LINE

P.C. GIRDERS (W50G)

WIDENING

LOADING: HS-25

OR

TWO 24 KIP AXLES @ 4' C'TRS.

AS BUILT CHANGES (3-26-96)

Bridge Design Engr	Myint Lwin 9-92				
Supervisor	Y. Tam 9-92				
Designed By	Y. TAM 8/92				
Checked By	H. BAUER 2/92				
Detailed By	L. MOWER 8/92				
Bridge Projects Engr.	K. Kirk 6/92				
Prelim. Plan By	R. ZELDENRUST 1/92				
Architect/Specialist	R. Mays 6/92	DATE	REVISION	BY	APP'D

REGION NO.	STATE	FED. AID PROJ. NO.	SHEET NO.	TOTAL SHEETS
10	WASH.	I-IM-405-3(791)		
JOB NUMBER 92W070				

4/61

BRIDGE AND STRUCTURES

MYINT LWIN, STATE OF WASHINGTON, REGISTERED PROFESSIONAL ENGINEER, EXPIRES 1/13/93
9-9-92

1405_56WROOT:(FGB)LAYOUT_W_BNRR.FGB:1 08-SEP-92

Washington State Department of Transportation

SR 405
NORTHUP TO BOTHEL
HOV AND SCADI-STAGE 1
BNRR OVERCROSSING 405/56W

LAYOUT

BRIDGE SHEET NO. 1
SHEET 380 OF 474 SHEETS

SR405/408

2/07/92

C.S. 1745 PROJ. NO. XL0155D DIST. NO. 1 NORTHUP TO BOTHELL SR405 BRIDGE NO. 405/56 W WIDENING

SR 405 JOB NO. 7042 SHEET 1

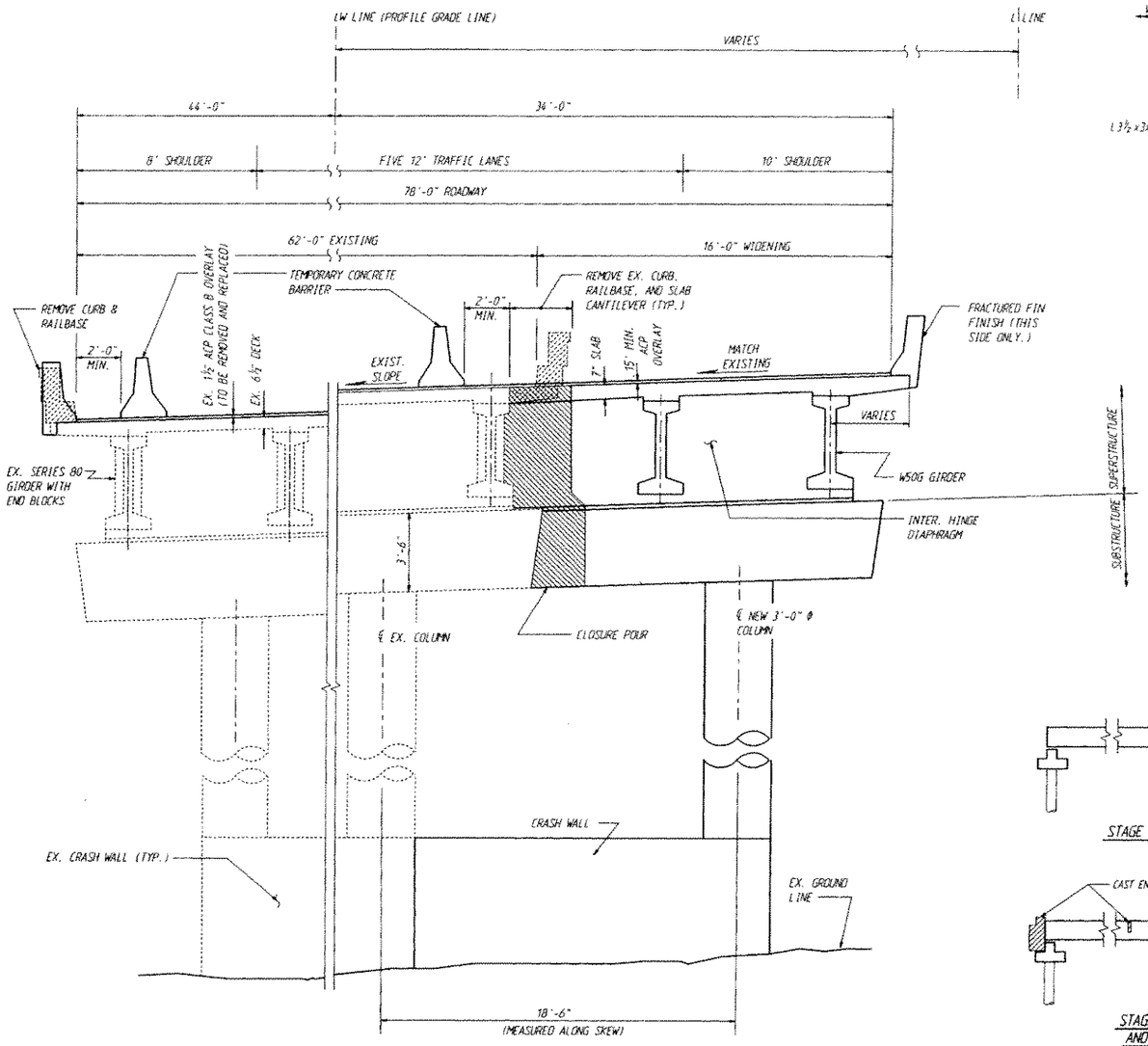

WEST BRIDGE TYPICAL SECTION

SHOWN AT INTERMEDIATE PIER
DIMENSIONS STATED ARE MEASURED RADIALLY
UNLESS OTHERWISE NOTED

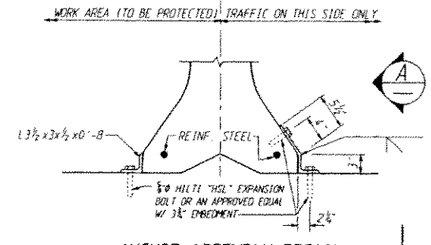

ANCHOR ASSEMBLY DETAIL

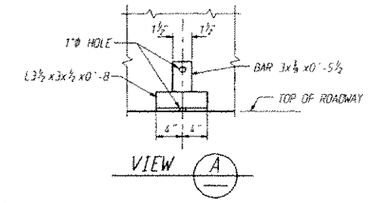

NOTES:
1. SHIMS MAY BE REQUIRED TO FIT THE BRACKET TO THE TEMPORARY CONCRETE BARRIER AND ROADWAY SURFACE.
2. LOCATION OF ANCHORS IS TO BE ADJUSTED TO MISS THE MAIN REINFORCING IN THE DECK WHEN DRILLING HOLES.
3. PROVIDE TWO (2) ANCHOR ASSEMBLIES FOR EACH SECTION OF THE TEMPORARY CONCRETE BARRIER ON THE ROADWAY SURFACE.
4. FOR DETAILS NOT SHOWN, SEE STANDARD C-8.
5. LOCATE ANCHORS APPROXIMATELY 2'-6" FROM BOTH ENDS OF EACH SECTION.
6. AFTER REMOVING THE TEMPORARY CONCRETE BARRIER, CLEAN AND FILL BOLT HOLES WITH A 2:1 SAND/CEMENT GROUT BY VOLUME.

CONSTRUCTION STAGING

STAGE 1:

1. INSTALL TEMPORARY BARRIER & REMOVE PORTION OF EXISTING STRUCTURE.
2. CONSTRUCT WIDENING STRUCTURE EXCEPT CLOSURES. (SEE SEQUENCE OF CONSTRUCTION THIS SHEET.)
3. RELEASE FALSEWORK
4. CAST X-BEAM CLOSURE.
5. CAST DIAPHRAGM AND SLAB CLOSURE.
6. COMPLETE WIDENING STRUCTURE.

STAGE 2:

1. INSTALL TEMPORARY BARRIER & REPLACE EXISTING CURB & RAILBASE WITH TRAFFIC BARRIER.

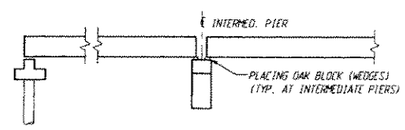

STAGE 1 - SET GIRDERS IN PLACE

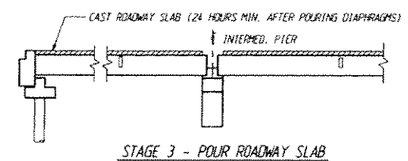

STAGE 3 - POUR ROADWAY SLAB

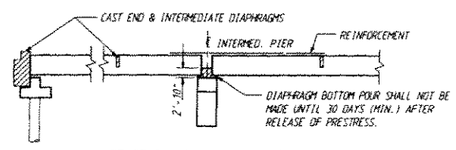

STAGE 2 - POUR DIAPHRAGMS AND PLACE REINFORCEMENT

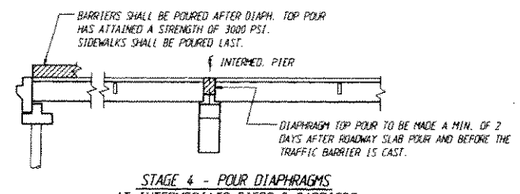

STAGE 4 - POUR DIAPHRAGMS AT INTERMEDIATE PIERS & BARRIERS

CONSTRUCTION SEQUENCE - SUPERSTRUCTURE

Bridge Design Engr.	9-92				REGION NO.	STATE	FED. AID PROJ. NO.	SHEET NO.	TOTAL SHEETS	BRIDGE AND STRUCTURES	1405_SGWROOT:\FGB\LAYOUT_2.FGB:1 08-SEP-92
Supervisor	9-92				10	WASH.	1-IM-405-3(791)				Washington State Department of Transportation
Designed By Y. TAM	8/92				JOB NUMBER						
Checked By M. SHEIKHZADEH	9/92				92W070						
Detailed By L. MEMER	8.92										
Bridge Projects Engr.	6/92										
Prelim. Plan By R. ZELDENRUST	1/92										
Architect/Specialist R. Mays	6/92	DATE	REVISION	BY	APP'D	4/61					

H. RYNT LWIN, STATE OF WASHINGTON, 9-9-92, PROFESSIONAL ENGINEER, EXPIRES 1/1/93

SR 405
NORTHUP TO BOTHEL
HOV AND SC&DI-STAGE 1
BNRR OVERCROSSING 405/56W

TYPICAL ROADWAY SECTION & CONSTRUCTION SEQUENCE

BRIDGE SHEET NO. 2

SHEET 381 OF 474

SR 405/405 207/191

SR 405 JOB NO. 7042 SHEET 2

C.S. 1745 PROJ. NO. XL0155D DIST. NO. 1 NORTHUP TO BOTHELL SR405 BRIDGE NO. 405/56 E&W WIDENING

WEST BRIDGE

LW LINE	OFFSET *	ELEVATION
662+06.8	VARIES	181.14
662+10	VARIES	181.12
662+20	VARIES	181.08
662+30	VARIES	180.92
662+40	VARIES	180.83
662+50	VARIES	180.68
662+60	VARIES	180.53
662+70	VARIES	180.39
662+80	VARIES	180.26
662+90	VARIES	180.10
663+00	VARIES	179.99
663+10	VARIES	179.83
663+20	VARIES	179.67
663+30	VARIES	179.53
663+40	VARIES	179.44
663+50	VARIES	179.19
663+60	VARIES	179.00
663+70	VARIES	178.82
663+80	VARIES	178.68
663+90	VARIES	178.49
664+00	VARIES	178.33
664+10	VARIES	178.12
664+20	VARIES	177.95
664+30	VARIES	177.72
664+40	VARIES	177.53
664+50	VARIES	177.44
664+51.8	VARIES	177.44

* AT LEFT CURB

WEST BRIDGE

LW LINE	OFFSET	ELEVATION
662+11.9	10' FROM LT CURB	181.52
662+20	10' FROM LT CURB	181.40
662+30	10' FROM LT CURB	181.32
662+40	10' FROM LT CURB	181.25
662+50	10' FROM LT CURB	181.16
662+60	10' FROM LT CURB	181.03
662+70	10' FROM LT CURB	180.87
662+80	10' FROM LT CURB	180.75
662+90	10' FROM LT CURB	180.59
663+00	10' FROM LT CURB	180.41
663+10	10' FROM LT CURB	180.29
663+20	10' FROM LT CURB	180.15
663+30	10' FROM LT CURB	179.99
663+40	10' FROM LT CURB	179.85
663+50	10' FROM LT CURB	179.67
663+60	10' FROM LT CURB	179.49
663+70	10' FROM LT CURB	179.29
663+80	10' FROM LT CURB	179.11
663+90	10' FROM LT CURB	178.96
664+00	10' FROM LT CURB	178.80
664+10	10' FROM LT CURB	178.60
664+20	10' FROM LT CURB	178.43
664+30	10' FROM LT CURB	178.23
664+40	10' FROM LT CURB	178.01
664+50	10' FROM LT CURB	177.84
664+57.8	10' FROM LT CURB	177.77

WEST BRIDGE

LW LINE	OFFSET	ELEVATION
662+44.5	12.0' RT	183.51
662+50	12.0' RT	183.41
662+60	12.0' RT	183.30
662+70	12.0' RT	183.18
662+80	12.0' RT	183.07
662+90	12.0' RT	182.93
663+00	12.0' RT	182.77
663+10	12.0' RT	182.62
663+20	12.0' RT	182.45
663+30	12.0' RT	182.25
663+40	12.0' RT	182.11
663+50	12.0' RT	181.96
663+60	12.0' RT	181.80
663+70	12.0' RT	181.65
663+80	12.0' RT	181.45
663+90	12.0' RT	181.27
664+00	12.0' RT	181.10
664+10	12.0' RT	180.89
664+20	12.0' RT	180.69
664+30	12.0' RT	180.48
664+40	12.0' RT	180.30
664+50	12.0' RT	180.13
664+60	12.0' RT	179.91
664+70	12.0' RT	179.71
664+80	12.0' RT	179.52
664+86.0	12.0' RT	179.46

WEST BRIDGE

LW LINE	OFFSET *	ELEVATION
662+48.0	18.0" RT	183.71
662+50	18.0" RT	183.68
662+60	18.0" RT	183.61
662+70	18.0" RT	183.48
662+80	18.0" RT	183.33
662+90	18.0" RT	183.21
663+00	18.0" RT	183.09
663+10	18.0" RT	182.91
663+20	18.0" RT	182.75
663+30	18.0" RT	182.55
663+40	18.0" RT	182.39
663+50	18.0" RT	182.21
663+60	18.0" RT	182.09
663+70	18.0" RT	181.93
663+80	18.0" RT	181.73
663+90	18.0" RT	181.53
664+00	18.0" RT	181.39
664+10	18.0" RT	181.17
664+20	18.0" RT	180.97
664+30	18.0" RT	180.78
664+40	18.0" RT	180.59
664+50	18.0" RT	180.39
664+60	18.0" RT	180.20
664+70	18.0" RT	180.00
664+80	18.0" RT	179.84
664+89.5	18.0" RT	179.61

* AT RIGHT CURB

SR 405 JOB NO. -(1) SHEET 3

Bridge Design Engr.					REGION NO.	STATE	FED. AID PROJ. NO.	SHEET NO.	TOTAL SHEETS	BRIDGE AND STRUCTURES
Supervisor					10	WASH.				
Designed By Y. Tam 8/92					JOB NUMBER		I-IM-405-3(791)			
Checked By M. SHEIKHZADEH 9/92					92W070					
Detailed By L. Mower 8/92										
Bridge Projects Engr.										
Prelim. Plan By										
Architect/Specialist	DATE	REVISION	BY	APP'D	4161					

9-9-92

EXPIRES 12/31/93

I405_56WROOT \FGB\EXIST_DK_ELEV.FGB: 1 08-SEP-92

Washington State Department of Transportation

SR 405
NORTHUP TO BOTHEL
HOV AND SC&DI-STAGE 1
BNRR OVERCROSSING 405/56W

EXISTING DECK ELEVATIONS

BRIDGE SHEET NO. 3

SHEET 382 OF 474 SHEETS

SR405/408

207/90

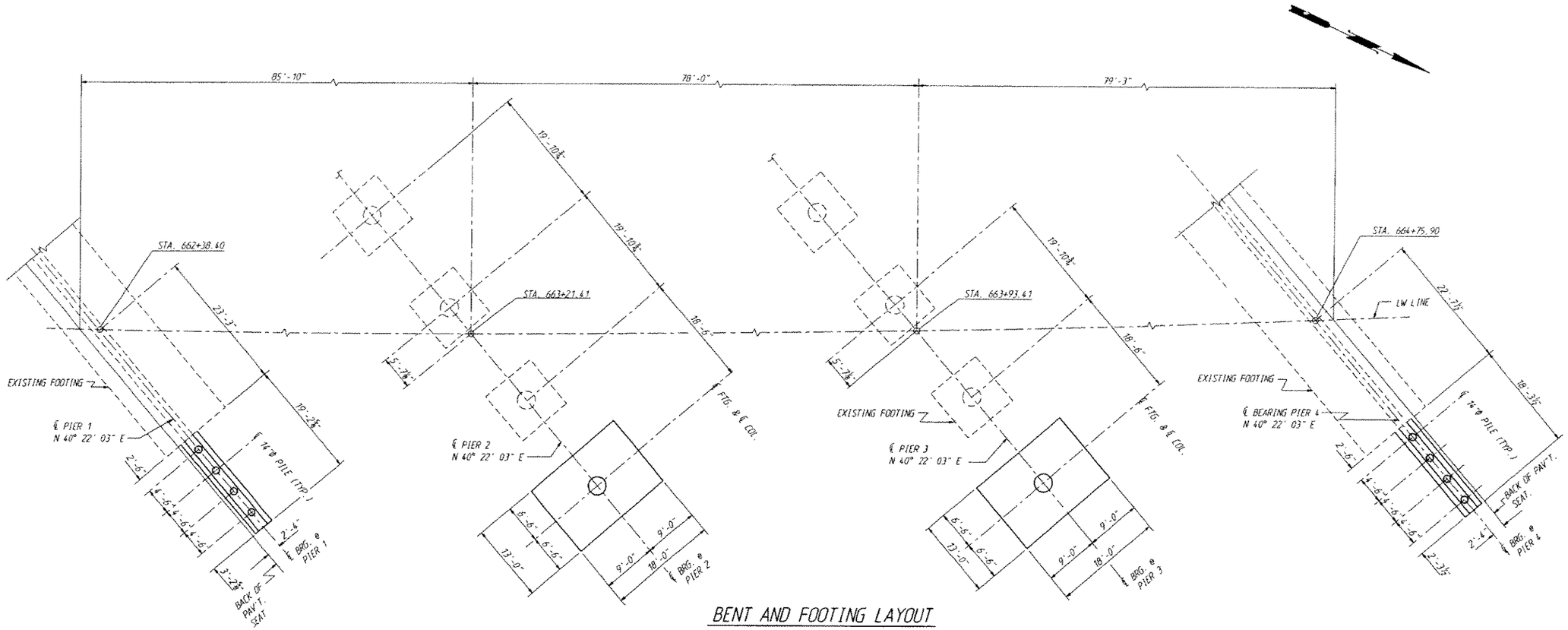

BENT AND FOOTING LAYOUT

NOTE:

1. FIELD VERIFY EXISTING, STATIONING, BEARINGS & DIMENSIONS.

SR 405 JOB NO. ^(1) SHEET 4

Bridge Design Engr. Myint Lwin 9-92				
Supervisor Y. Echan 9-92				
Designed By Y. TAM 8/92				
Checked By M. SHEIKHIZADEH 9/92				
Detailed By L. MOWER 8/92				
Bridge Projects Engr.				
Prelim. Plan By				
Architect/Specialist	DATE	REVISION	BY	APP'D

REGION NO.	STATE	FED. AID PROJ. NO.	SHEET NO.	TOTAL SHEETS
10	WASH.	I-IM-405-3(791)		
JOB NUMBER 92W070				
4161				

BRIDGE AND STRUCTURES

M. MYINT LWIN, STATE OF WASHINGTON, REGISTERED PROFESSIONAL ENGINEER, EXPIRES 1/13/93

I405_56WROOT:\FGB\FOOTING_PLAN.FGB;1 08-SEP-92

Washington State Department of Transportation

SR 405
NORTHUP TO BOTHEL
HOV AND SC&DI-STAGE 1
BNRR OVERCROSSING 405/56W

PILE BENT & FOOTING LAYOUT

BRIDGE SHEET NO. 4

SHEET 383 OF 474 SHEETS

SR405/408

207/189

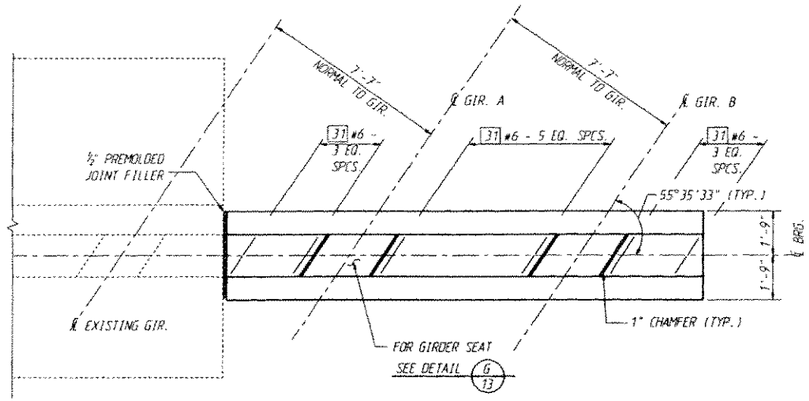

PLAN

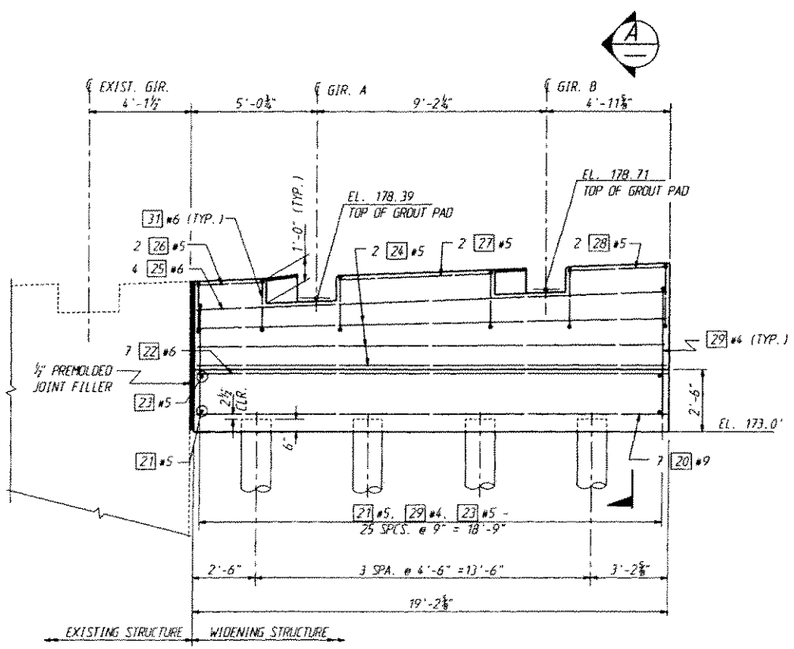

ELEVATION

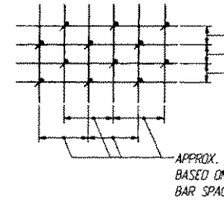

TIE SPACING DETAIL

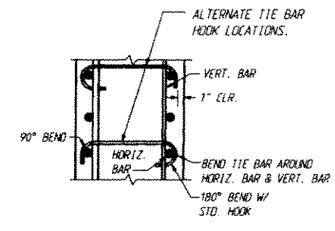

TIE BAR DETAIL
CONSTANT WIDTH SECTION

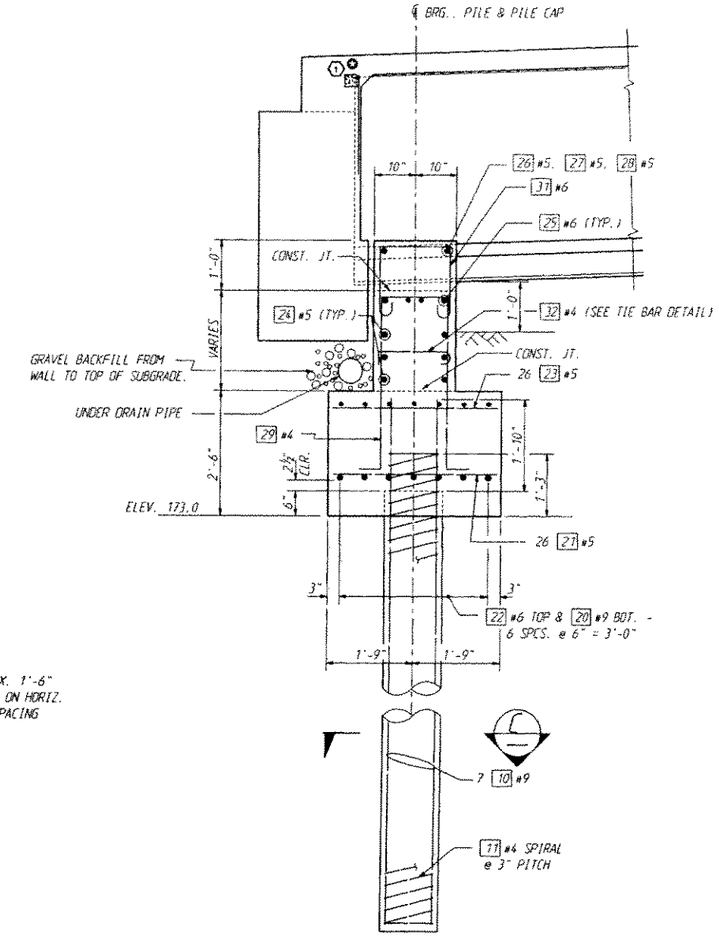

SECTION A

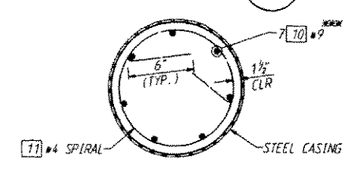

SECTION C

*** 3'-0" MIN. SPLICE STAGGER SPLICES. DO NOT SPLICE BARS WITHIN 10' OF PILE TOP.

1 SEE DETAIL SHEET 367 OF 474

AS BUILT CHANGES (3-25-98)

Bridge Design Engr.					REGION NO.	STATE	FED. AID PROJ. NO.	SHEET NO.	TOTAL SHEETS
Supervisor					10	WASH.	I-IM-405-3(791)		
Designed By Y. TAM 8/92					JOB NUMBER				
Checked By M. SHEIKHIZADEH 9/92					92W070				
Detailed By L. MOWER 8/92									
Bridge Projects Engr.									
Prelim. Plan By									
Architect/Specialist	DATE	REVISION	BY	APP'D	4161				

BRIDGE AND STRUCTURES

M. MYINT LWIN, STATE OF WASHINGTON, REGISTERED PROFESSIONAL ENGINEER — 9-9-92 — EXPIRES 12/1/93

I405_56WROOT:(FGB)PIER_1.FGB:1 08-SEP-92

Washington State Department of Transportation

SR 405
NORTHUP TO BOTHEL
HOV AND SC&DI-STAGE 1
BNRR OVERCROSSING 405/56W

PIER 1

BRIDGE SHEET NO. 5

SHEET 384 OF 474 SHEETS

SR 405 JOB NO. 7042 SHEET 5

SR 405/408

207/188

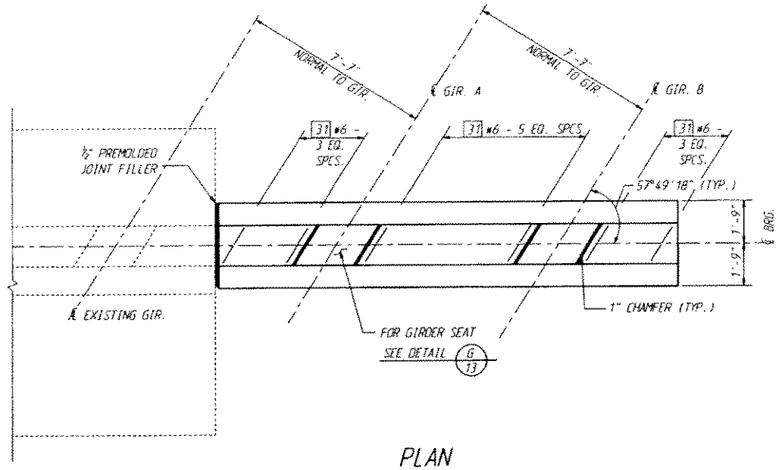

PLAN

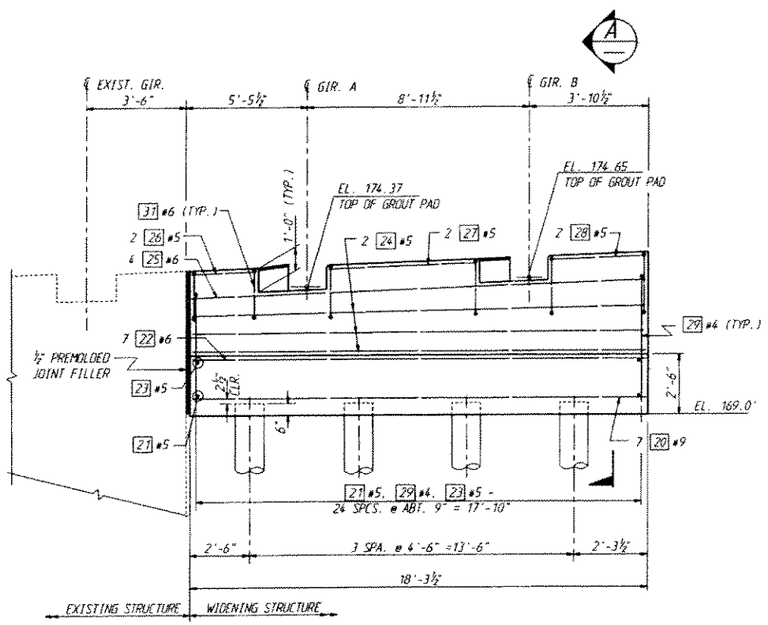

ELEVATION

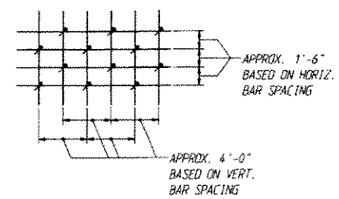

TIE SPACING DETAIL

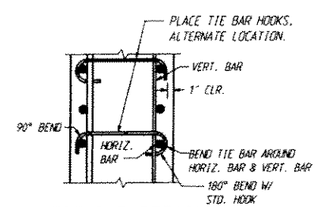

TIE BAR DETAIL
CONSTANT WIDTH SECTION

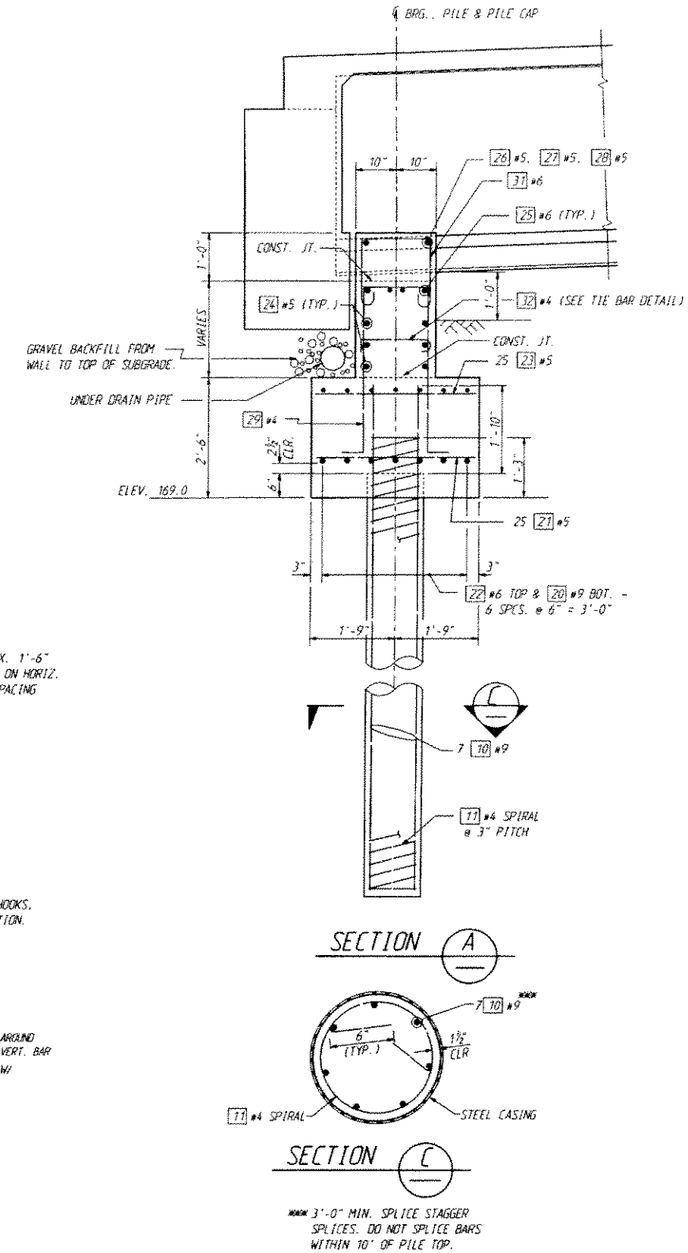

SECTION A

SECTION C

*** 3'-0" MIN. SPLICE STAGGER SPLICES. DO NOT SPLICE BARS WITHIN 10' OF PILE TOP.

SR 405 JOB NO. 7042 SHEET 6

Bridge Design Engr.					REGION NO.	STATE	FED. AID PROJ. NO.	SHEET NO.	TOTAL SHEETS
Supervisor					10	WASH.			
Designed By Y. TAM 8/92					JOB NUMBER				
Checked By M. SHEIKHZADEH 9/92					92W070		1-IM-405-3(791)		
Detailed By L. MOWER 8/92									
Bridge Projects Engr.									
Prelim. Plan By									
Architect/Specialist	DATE	REVISION	BY	APP'D	4161				

BRIDGE AND STRUCTURES

9-9-92 Expires 1/31/92

I405_S6WROOT:(FGB)PIER_4.FGB:1 08-SEP-92

Washington State Department of Transportation

SR 405
NORTHUP TO BOTHEL
HOV AND SC&DI-STAGE 1
BNRR OVERCROSSING 405/56W

PIER 4

BRIDGE SHEET NO. 6

SHEET 385 OF 474 SHEETS

SR405/408

207187.

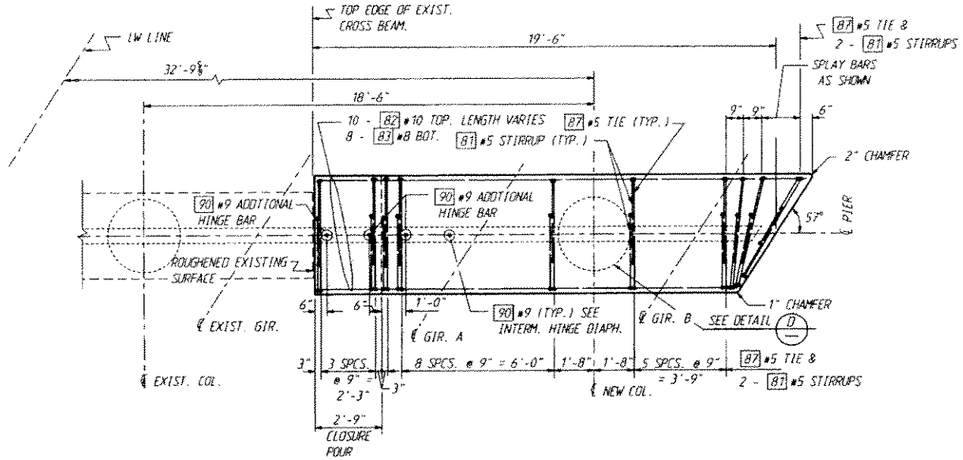

PLAN

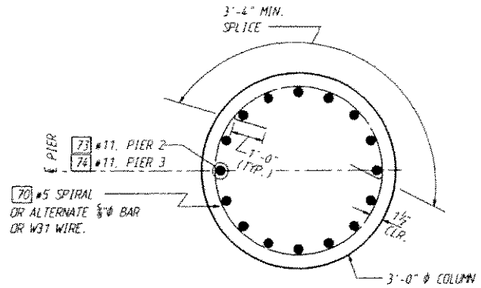

SECTION C

NOTE:
NO SPIRAL LAP SPLICE WITHIN 4 FT. FROM TOP & BOTTOM OF COLUMN.

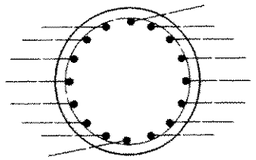

DETAIL D

SHOWING COLUMN REINF. ORIENTATION IN CROSS BEAM.

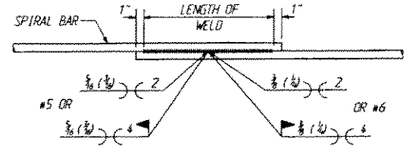

WELDED LAP SPLICE DETAIL

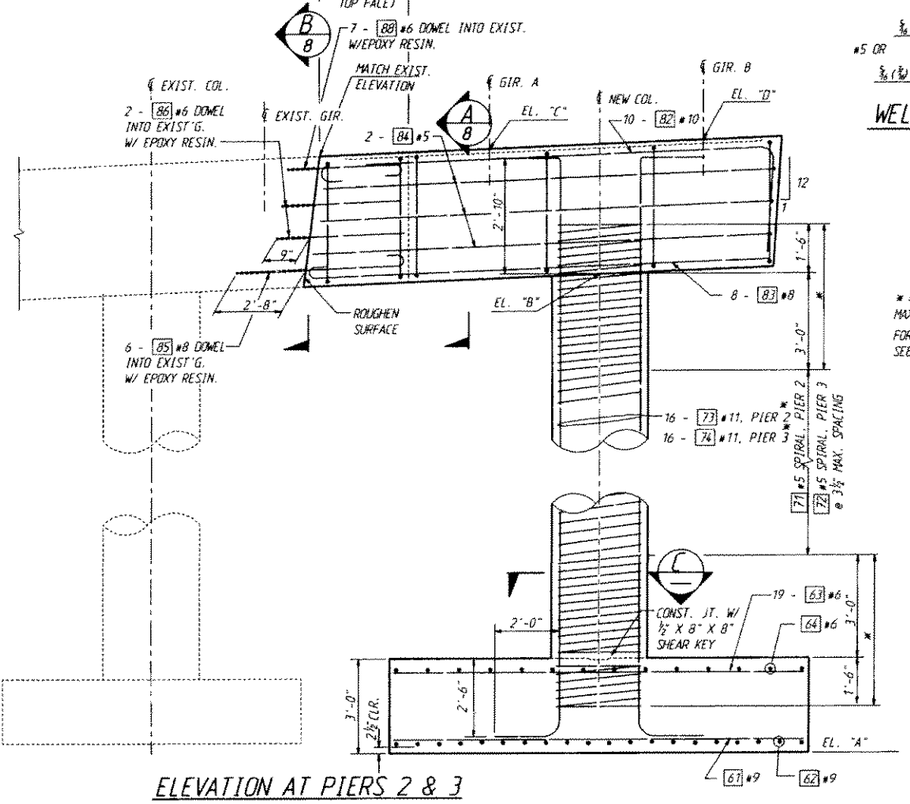

ELEVATION AT PIERS 2 & 3

* = 70 #5 SPIRAL @ 3" MAX. SPACING.
FOR DIMENSIONS NOT SHOWN SEE PLAN.

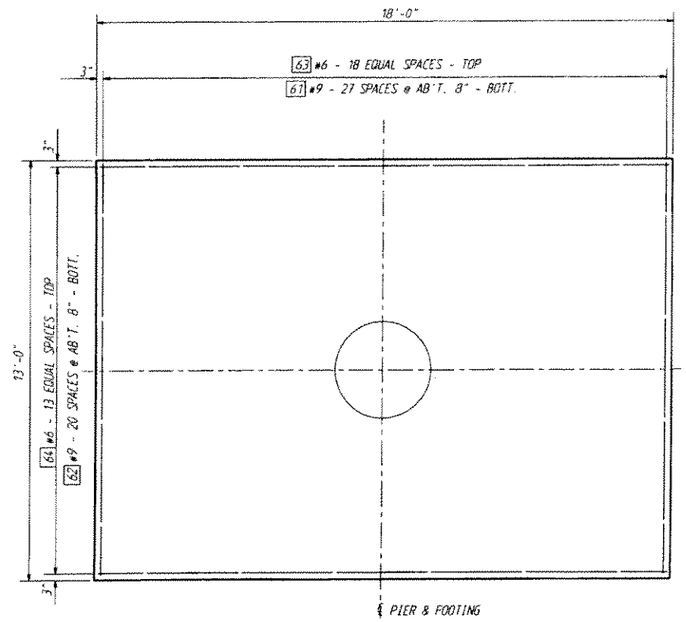

FOOTING PLAN

ELEVATIONS

	"A"	"B"	"C"	"D"
PIER 2	141.00	173.66	177.01	177.32
PIER 3	141.00	172.31	175.67	175.96

ELEVATIONS SHALL BE VERIFIED IN FIELD BY CONTRACTOR.

Bridge Design Engr.	9-92			REGION NO.	STATE	FED. AID PROJ. NO.	SHEET NO. / TOTAL SHEETS
Supervisor	9-92			10	WASH.		
Designed By Y. TAM	8/92			JOB NUMBER		I-IM-405-3(791)	
Checked By M. SHEIKHIZADEH	9/92			92W070			
Detailed By L. MOMER	8/92						
Bridge Projects Engr.							
Prelim. Plan By							
Architect/Specialist	DATE	REVISION	BY	APP'D	4161		

BRIDGE AND STRUCTURES

M. MYINT LWIN, STATE OF WASHINGTON, REGISTERED PROFESSIONAL ENGINEER — 9-9-92 — EXPIRES 1/11/93

1405_56WROOT:(FGB)PIER_2.FGB:1 08-SEP-92

Washington State Department of Transportation

SR 405
NORTHUP TO BOTHEL
HOV AND SC&DI-STAGE 1
BNRR OVERCROSSING 405/56W

PIERS 2 & 3

BRIDGE SHEET NO. 7
SHEET 386 OF 474 SHEETS

SR 405 JOB NO. 7042 SHEET 7

SR405/408

d.07/186

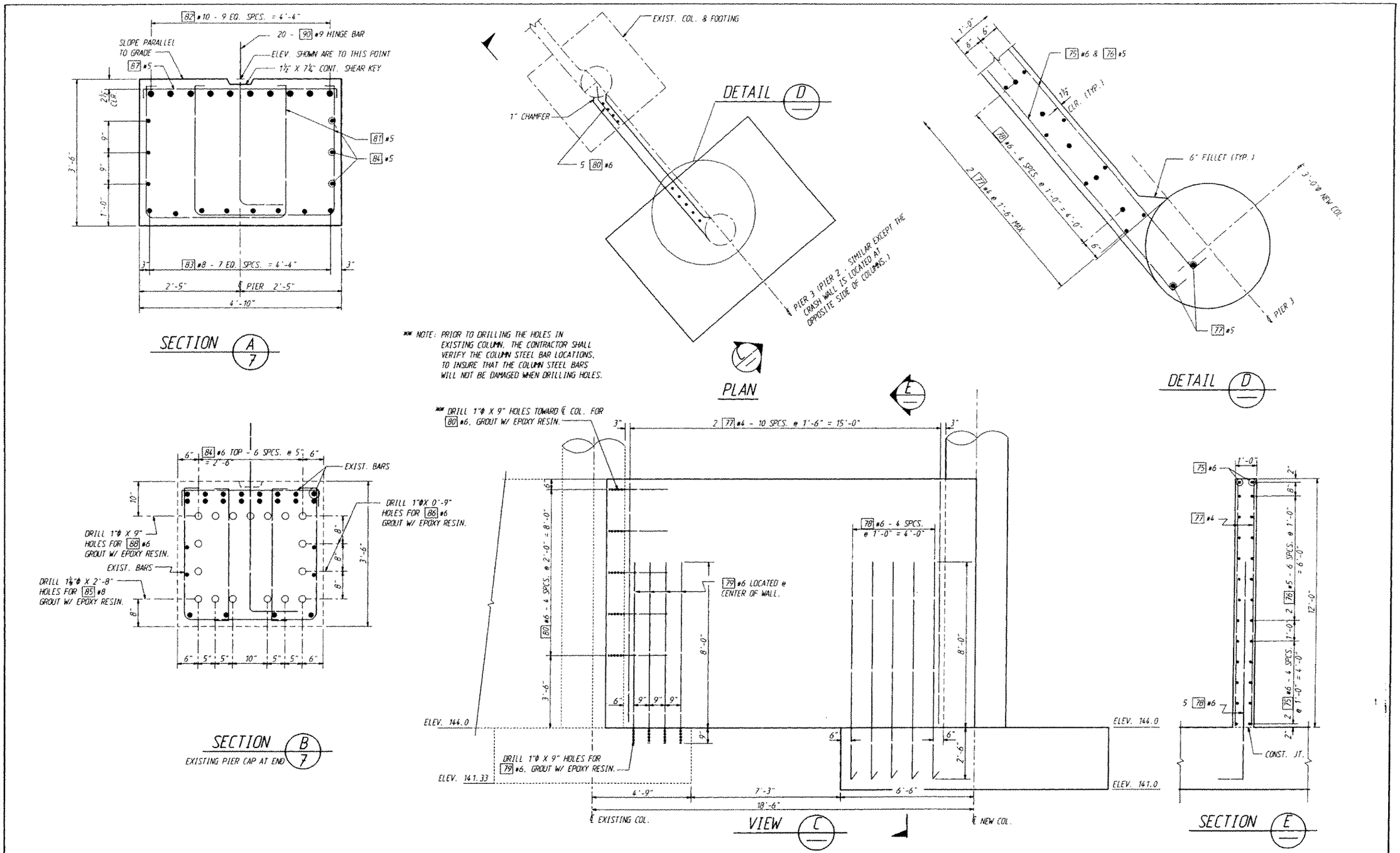

Bridge Design Engr.	9-92				REGION NO.	STATE	FED. AID PROJ. NO.	SHEET NO.	TOTAL SHEETS
Supervisor	9-92				10	WASH.	I-IM-405-3(791)		
Designed By Y. TAM	8/92				JOB NUMBER 92W070				
Checked By M. SHEIKHIZADEH	9/92								
Detailed By L. MOWER	8/92								
Bridge Projects Engr.									
Prelim. Plan By									
Architect/Specialist		DATE	REVISION	BY	APP'D	4161			

BRIDGE AND STRUCTURES

M. MYINT LWIN, STATE OF WASHINGTON, REGISTERED PROFESSIONAL ENGINEER, EXPIRES 1/13/93

9-9-92

I405_56WROOT:[FGB]PIERS2_3.FGB;1 08-SEP-92

Washington State Department of Transportation

SR 405
NORTHUP TO BOTHEL
HOV AND SC&DI-STAGE 1
BNRR OVERCROSSING 405/56W

PIERS 2 & 3 DETAILS, CRASH WALL DETAILS

BRIDGE SHEET NO. 8

SHEET 387 OF 474 SHEETS

SR 405 JOB NO. 7042 SHEET 8

SA405/408

202/185

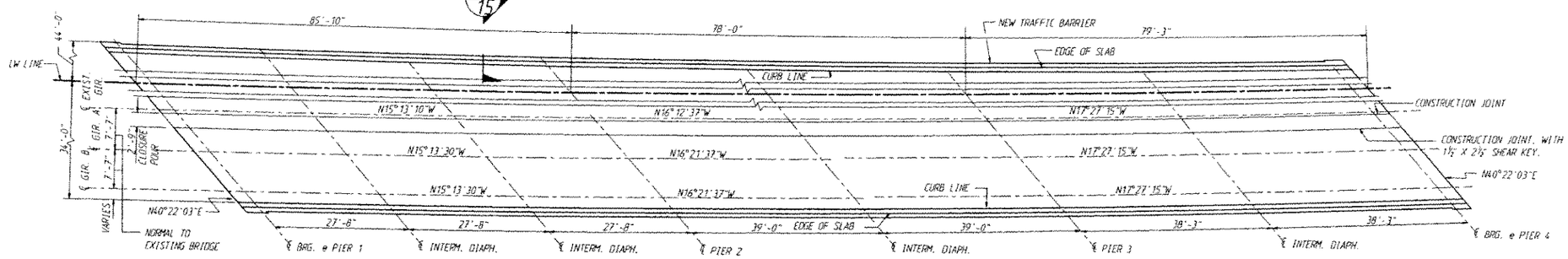

FRAMING PLAN

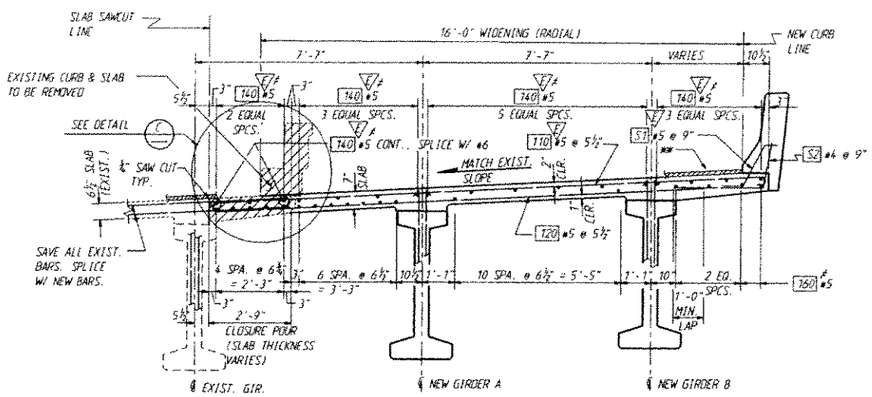

TYPICAL ROADWAY SECT. NEAR ℄ SPAN

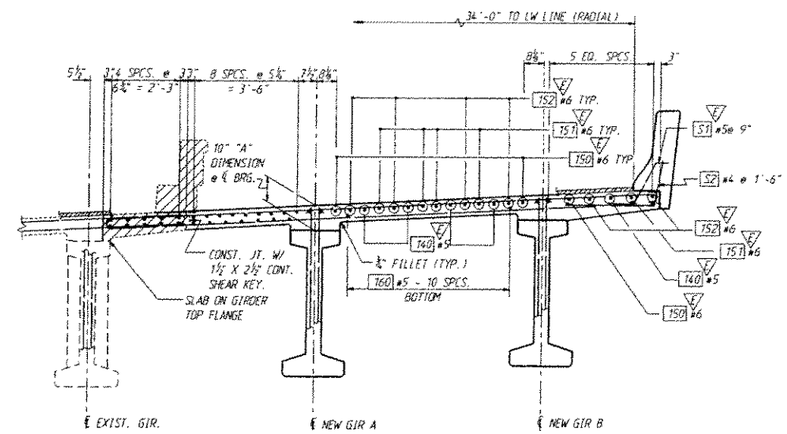

TYPICAL ROADWAY SECTION AT PIERS 2 & 3

FOR REINF. & DIMENSIONS NOT CALLOUT SEE TYP. ROADWAY SECT. NEAR ℄ SPAN.

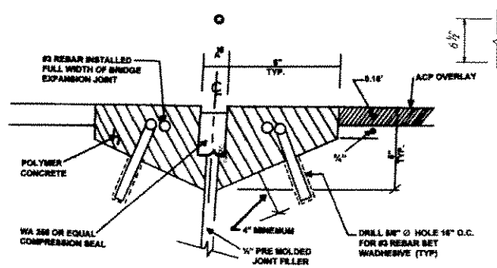

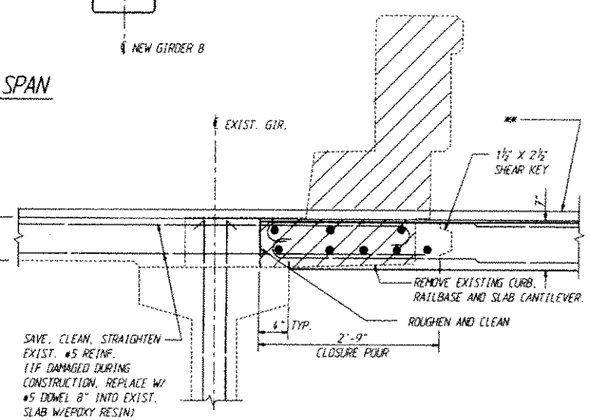

DETAIL C

1 ** 0.15' MIN. ACP OVERLAY ON WIDENING AND EXISTING STRUCTURE.

NUMBER & LOCATION OF SPLICES ARE OPTIONAL WITH 2'-0" MIN. SPL. LENGTH, EXCEPT NO SPLICE ALLOWED WITHIN 18 FT. OF EACH INTERIOR PIER.

AS BUILT CHANGES (3-25-98)

Bridge Design Engr.	7/93				REGION NO.	STATE	FED. AID PROJ. NO.	SHEET NO.	TOTAL SHEETS
Supervisor	7/93				10	WASH			
Designed By Y. TAM	8/92				JOB NUMBER				
Checked By M. SHETKHIZADEH	9/92								
Detailed By L. MOWER	8/92								
Bridge Projects Engr.									
Prelim. Plan By	1/93	1	EDITORIAL CHANGES	M					
Architect/Specialist	DATE		REVISION	BY	APP'D	4161			

BRIDGE AND STRUCTURES

9-9-92

REGISTERED PROFESSIONAL ENGINEER — EXPIRES 12/13/93

1405_56MROOT \FGB\FRAM_PLAN.FGB: 1 25-JAN-93

Washington State Department of Transportation

SR 405
NORTHUP TO BOTHEL
HOV AND SCADI-STAGE 1
BNRR OVERCROSSING 405/56W

FRAMING PLAN & TYPICAL ROADWAY

BRIDGE SHEET NO. 9

SHEET 388 OF 474 SHEETS

SR 405 JOB NO. 7042 SHEET 9

SR405/408

207/184

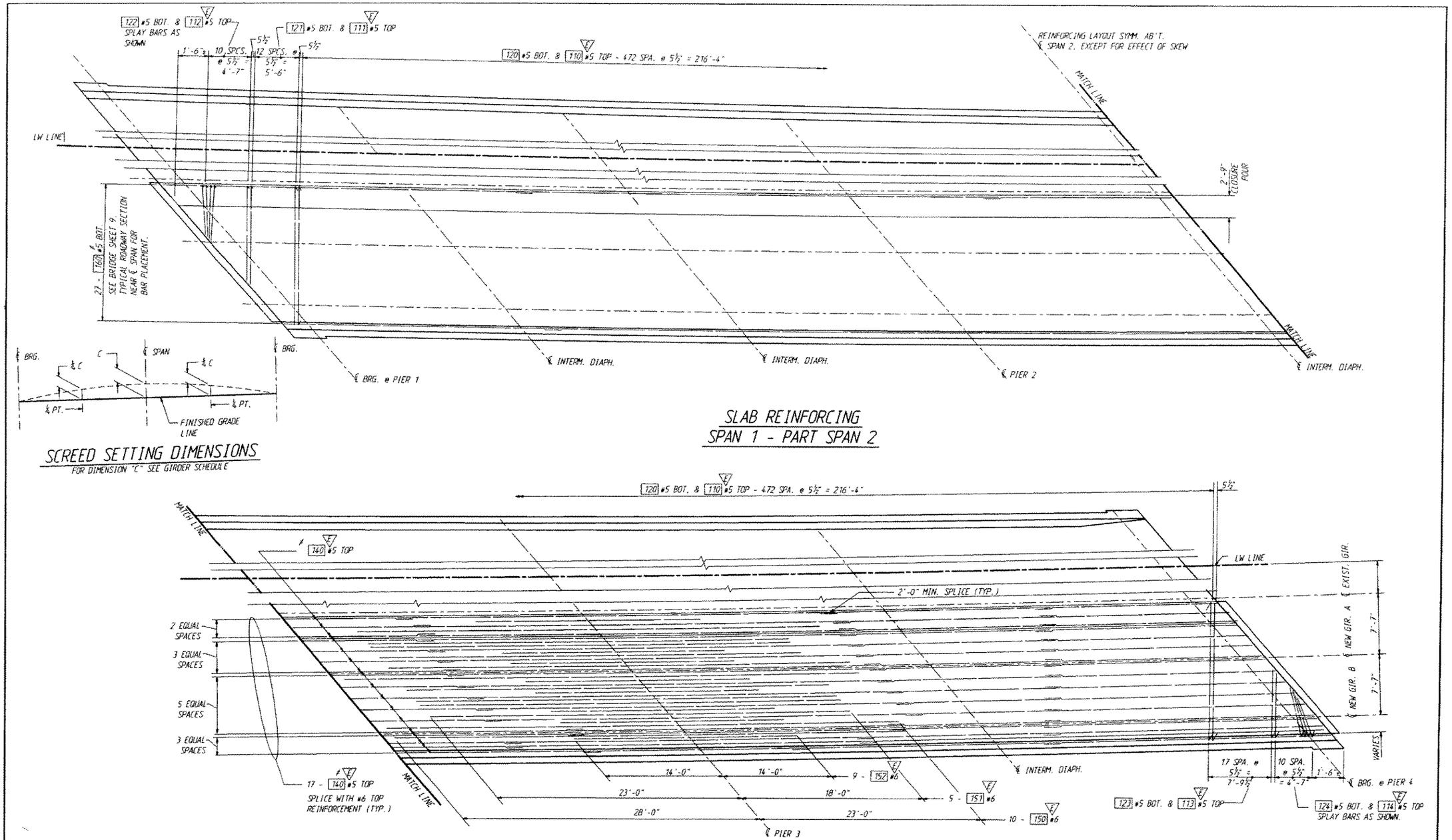

SCREED SETTING DIMENSIONS
FOR DIMENSION "C" SEE GIRDER SCHEDULE

SLAB REINFORCING
SPAN 1 - PART SPAN 2

SLAB REINFORCING
PART SPAN 2 - SPAN 3

SR 405 JOB NO. 7042 SHEET 10

Bridge Design Engr. Myun Kwon 9-92					REGION NO.	STATE	FED. AID PROJ. NO.	SHEET NO.	TOTAL SHEETS	BRIDGE AND STRUCTURES	I405_56WROOT:(FGB)SLAB_REINF.FGB:1 08-SEP-92
Supervisor Y.F. Chan 9-92					10	WASH.	I-IM-405-3(791)				Washington State Department of Transportation
Designed By Y.M. TAM 8/92					JOB NUMBER 92W070						
Checked By M. SHEIKHIZADEH 9/92											
Detailed By L. MOWER											
Bridge Projects Engr.											
Prelim. Plan By											
Architect/Specialist	DATE	REVISION	BY	APP'D	4161						

M. HYINT LWIN, STATE OF WASHINGTON, 19838, REGISTERED PROFESSIONAL ENGINEER, EXPIRES 1/17/93
9-9-92

SR 405
NORTHUP TO BOTHEL
HOV AND SC&DI-STAGE 1
BNRR OVERCROSSING 405/56W

ROADWAY SLAB

BRIDGE SHEET NO. 10
SHEET 389 OF 474 SHEETS

SR405/408
207/183

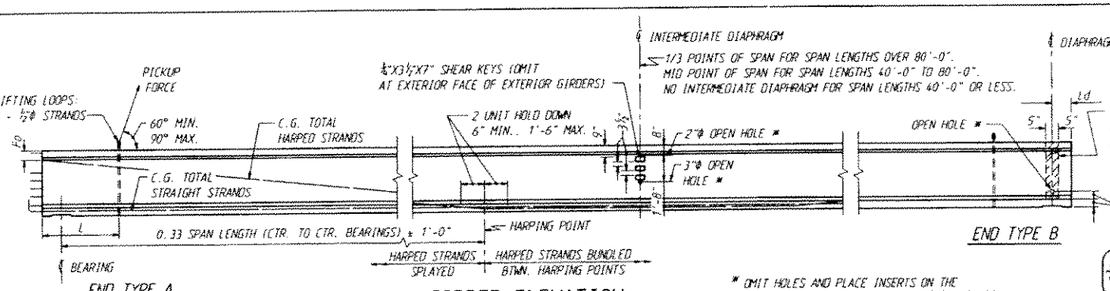

GIRDER ELEVATION

* OMIT HOLES AND PLACE INSERTS ON THE INTERIOR FACE OF EXTERIOR GIRDERS. PLACE HOLES AND INSERTS PARALLEL TO SKEW. INSERTS SHALL BE 1" RICHMOND ROCKET, BURKE HI-TENSILE, LANCASTER MALLEABLE OR APPROVED EQUAL.

OPEN HOLE

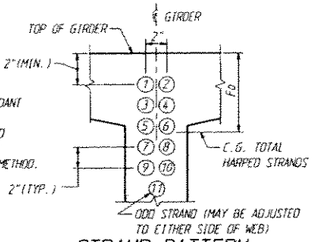

STRAND PATTERN AT GIRDER END

HARPED STRAND LOCATION SEQUENCE SHALL BE AS SHOWN ①, ② ETC.

NOTES.
ALL DETAILS ON THIS SHEET ARE FOR PRETENSIONED DESIGN ONLY.

PLAN LENGTH SHALL BE INCREASED AS NECESSARY TO COMPENSATE FOR SHORTENING DUE TO PRESTRESS AND SHRINKAGE.

EXTRA CAUTION MUST BE EXERCISED IN HANDLING AND PLACING ALL GIRDERS.

ALL GIRDERS OVER 100' LONG SHALL BE BRACED LATERALLY TO PREVENT TIPPING OR BUCKLING.

THE TOP SURFACE OF THE GIRDER FLANGE SHALL BE ROUGHENED IN ACCORDANCE WITH SECTION 6-02.3(25)H OF THE STANDARD SPECIFICATIONS.

IF THE LIFTING LOOPS EXTEND WITHIN 3" OF THE TOP OF THE ROADWAY SLAB THEY SHALL BE CUT OFF PRIOR TO POURING THE ROADWAY SLAB. ALL LIFTING STRANDS SHALL BE OF THE SAME MATERIAL AND STRENGTH AS THE PRESTRESSING STRANDS. WRAP THE LIFTING LOOPS SO THAT EACH STRAND WILL CARRY ITS SHARE OF THE TOTAL LOAD. EXTEND LIFTING LOOPS ENDING WITH A 9" LONG 90° HOOK TO WITHIN 3" CLEAR OF THE BOTTOM OF THE GIRDER.

CUT ALL STRANDS FLUSH WITH THE GIRDER ENDS AND PAINT WITH AN APPROVED EPOXY RESIN EXCEPT FOR EXTENDED STRANDS AS SHOWN.

FORMS FOR BEARING PAD RECESSES SHALL BE CONSTRUCTED AND FASTENED IN SUCH A MANNER AS NOT TO CAUSE DAMAGE TO THE GIRDER DURING THE STRAND RELEASE OPERATION.

ALL STRANDS ARE ½"Φ LOW RELAXATION STRANDS (AASHTO M203 GRADE 270).

EXTENDED STRANDS AND BARS ARE PARALLEL TO GIRDER.

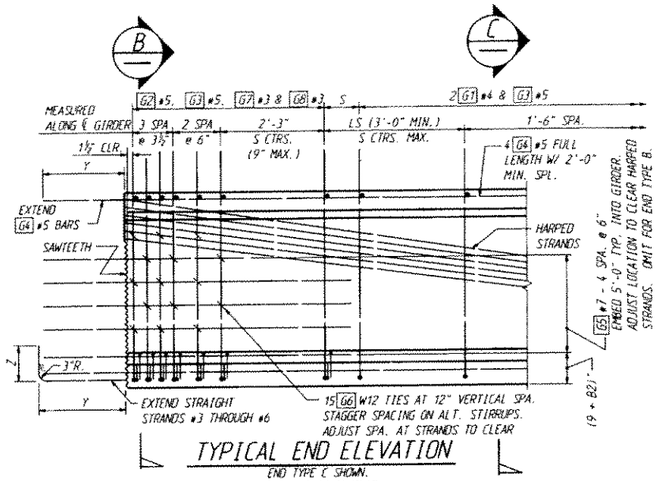

TYPICAL END ELEVATION

END TYPE C SHOWN. OTHER ENDS SIMILAR

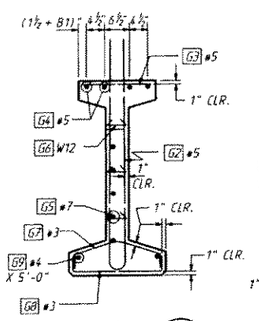

SECTION B

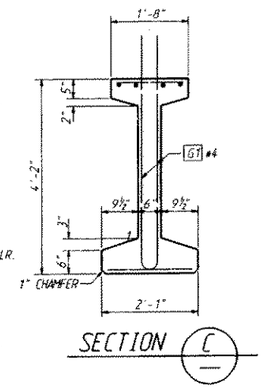

SECTION C

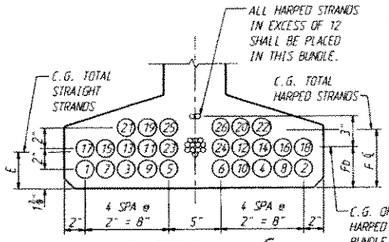

STRAND PATTERN AT ℄ SPAN

STRAND LOCATION SEQUENCE SHALL BE AS SHOWN ①, ② ETC.

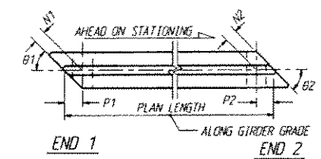

GIRDER SCHEDULE

DIMENSION A AT ℄ BEARINGS = 10" — BASED ON GIRDER DEFLECTION = D AT TIME OF SLAB POUR (120 DAYS)

SPAN	GIRDER	END 1 TYPE	END 2 TYPE	L	θ1	θ2	N1	N2	P1	P2	PLAN LENGTH	MIN. CONC. COMPR. STRENGTH @ 28 DAYS F'c (KSI)	@ RELEASE F'ci (KSI)	S (IN.)	LS (FT.)	HARPED NO. OF STRANDS	HARPED JACKING FORCE (KIPS)	STRAIGHT NO. OF STRANDS	STRAIGHT JACKING FORCE (KIPS)	LOCATION OF C.G. STRANDS (IN.) E	F ℄	Fb	Fa	C (IN.)	D (IN.)	Ld (IN.)
1	ALL	A	C	3'-0"	56°	90°	1'-3"	-	1'-6¼"	-	82'-7⅞"	7	5.5	9	3	10	310	22	682	3¼	7	3	6	1	2⅝	-
2	ALL	C	C	3'-0"	90°	90°	-	-	-	-	74'-2"	7	4.6	9	3	8	248	18	558	2¾	9	3	5	⅝	1¾	-
3	ALL	C	A	3'-0"	90°	58°	-	1'-3"	-	1'-5⅞"	76'-0½"	7	4.8	9	3	8	248	20	620	3⅛	10	3	5	⅝	2	-

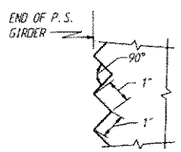

END TYPE	BEARING RECESS	Y	Z	SAWTEETH
A	YES	9"	1'-6"	YES
B	YES	0"	0"	NO
C	NO	1'-10"	9"	YES

ENDS AHEAD ON STATION
G5 BARS LEFT OF ℄
B1 = 0"
B2 = 0"
ENDS BACK ON STATION
G5 BARS RIGHT OF ℄
B1 = 1½"
B2 = 3"

SAWTEETH DETAILS

SAWTEETH ARE FULL WIDTH - USE SAWTOOTH KEYS FROM BOTTOM OF BOTTOM FLANGE TO BOTTOM OF LOWEST HARPED STRAND AS WELL AS TOP FLANGE ADJACENT TO HARPED STRANDS AS SHOWN IN SECTION B.

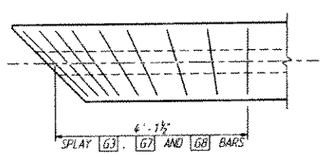

TRANSVERSE REINFORCING SKEWED ENDS

ONLY TRANSVERSE REINF. SHOWN

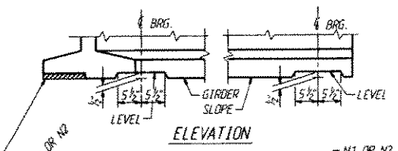

ELEVATION

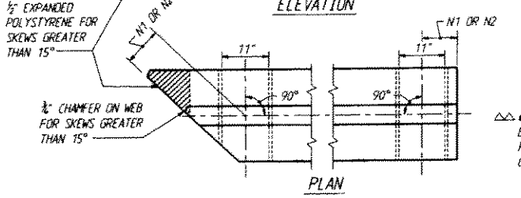

△△ #3 OR #4 MAY BE SUBSTITUED. FIELD BEND IS OPTIONAL

PLAN

BEARING RECESS DETAIL

MARK	LOCATION	SIZE	
G1	GIRDER STIRRUPS	4	
G2	GIRDER END STIRRUPS	5	
G3	GIRDER TOP FLANGE	5	STR.
G4	GIRDER LONGIT. FULL LENGTH	5	STR.
G5	GIRDER END LONGIT.	7	STR.
G6	GIRDER END TIES	W12	△△
G7	GIRDER END TIES	3	
G8	GIRDER END TIES	3	
G9	GIRDER LONGIT.	4	STR.

NOTE: FOR DIMENSION A, SEE "GIRDER SCHEDULE"

BENDING DIAGRAM (ALL DIMENSIONS ARE OUT TO OUT)

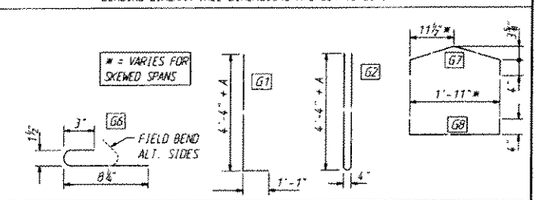

Bridge Design Engr.	Mark Flaskin 9-92			REGION NO.	STATE	FED. AID PROJ. NO.	SHEET NO. / TOTAL SHEETS
Supervisor	V. Elgan 9-92			10	WASH.		
Designed By	Y. TAM 8/92			JOB NUMBER		I-IM-405-3(791)	
Checked By	H. SHETKHIZADEH 9/92			92W070			
Detailed By	L. MOWER 8/92						
Bridge Projects Engr.							
Prelim. Plan By							
Architect/Specialist				4161			
	DATE	REVISION	BY	APP'D			

BRIDGE AND STRUCTURES

9-9-92

EXPIRES 1/17/93

[405_SGWROOT:\FGB]GIRDER_DET.FGB; 1 08-SEP-92

Washington State Department of Transportation

SR 405
NORTHUP TO BOTHEL
HOV AND SCADI-STAGE 1
BNRR OVERCROSSING 405/56W

GIRDER DETAILS

BRIDGE SHEET NO. 11

SHEET 390 OF 474 SHEETS

SR 405/408

207/182

SR 405 JOB NO. 7042 SHEET 11

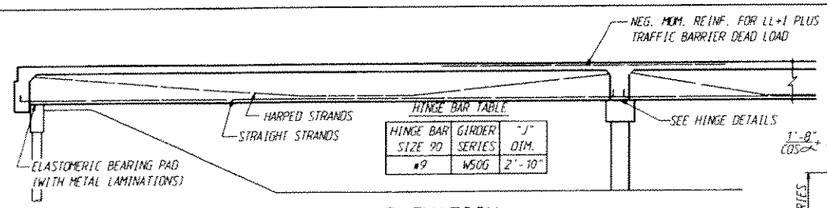

HINGE BAR TABLE

HINGE BAR SIZE 90	GIRDER SERIES	"J" DIM.
#9	W50G	2'-10"

ELEVATION

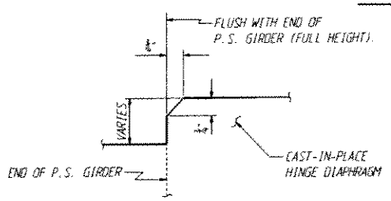

CHAMFER DETAIL

SKEW ANGLE α (5°)	NO. OF SPA. "N" @ EACH GIRDER ENDS SEE NOTE "A"
5°-20°	1
20°-40°	2
30°-40	3
40°-50°	4

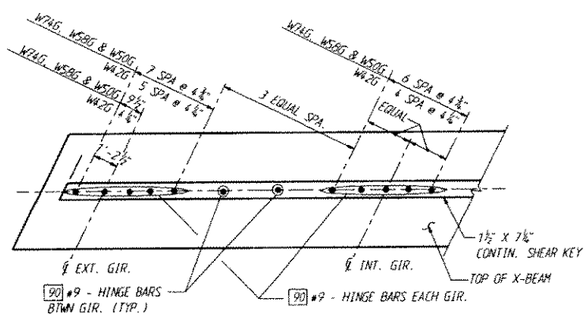

HINGE BAR PLAN

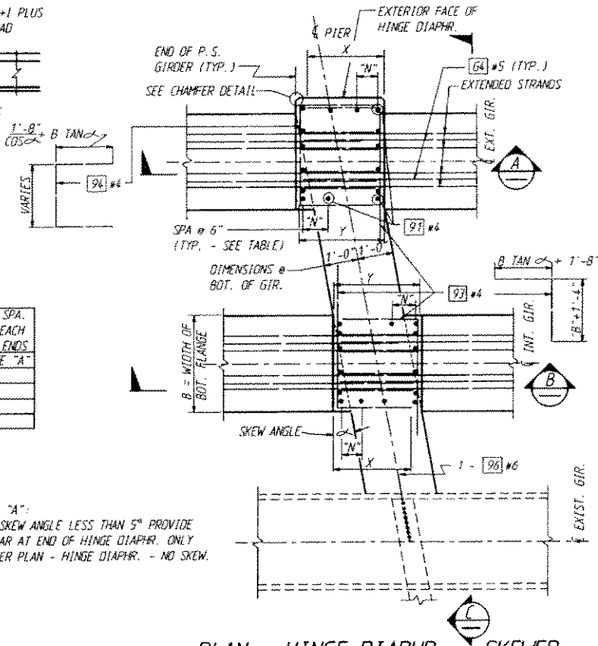

NOTE "A":
FOR SKEW ANGLE LESS THAN 5° PROVIDE #4 BAR AT END OF HINGE DIAPHR. ONLY AS PER PLAN - HINGE DIAPHR. - NO SKEW.

PLAN - HINGE DIAPHR. - SKEWED

$X = B \tan\alpha + 1'\text{-}10" = \text{EXTENSION OF } 64 \text{ \& } 65$

$^{*}Y = B \tan\alpha + \left(\frac{1'\text{-}11\frac{1}{2}"}{\alpha}\right)$

*MIN. LENGTH OF EXTENDED STRANDS = 2'-6" (BEND EXCESS)

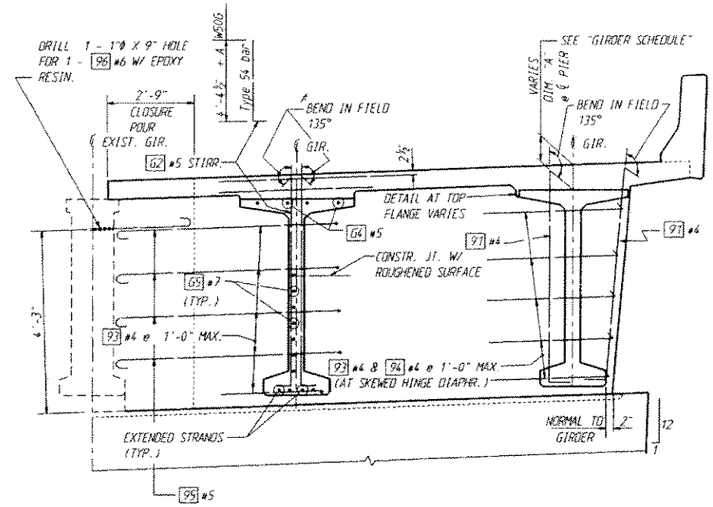

SECTION ℄

* 2½" CLR. (W/ OVERLAY)
2"CLR. - CIP CONST.
1½" CLR. - PRECAST CONST.
1¾" CLR. (W/ MODIF. CONC. OVERLAY)
} WITH ACP OVERLAY

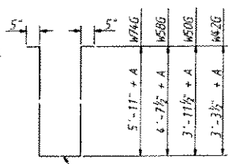

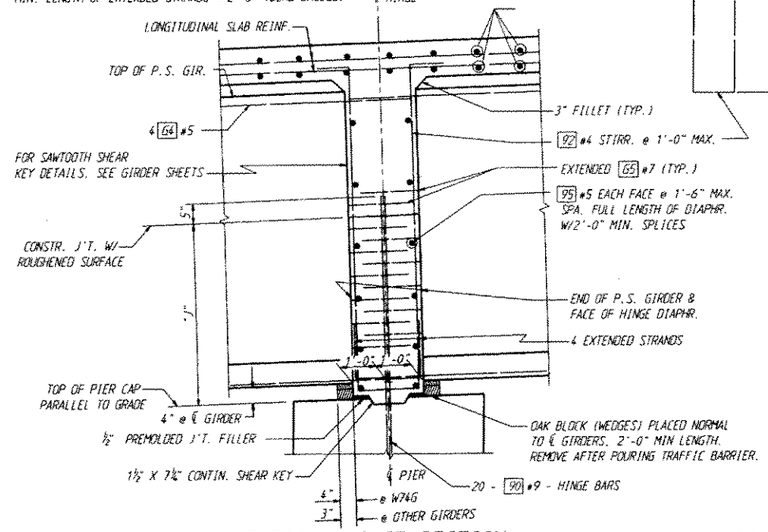

TYPICAL HINGE SECTION

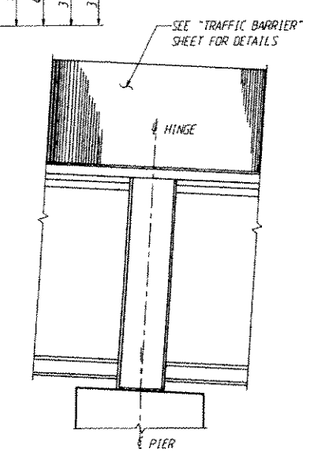

TYPICAL END VIEW HINGE DIAPHR.

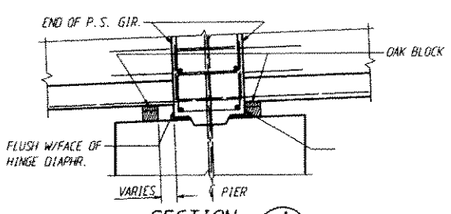

SECTION A

DETAILS NOT SHOWN ARE SIMILAR TO TYPICAL HINGE SECTION

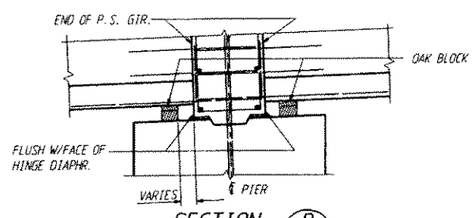

SECTION B

DETAILS NOT SHOWN ARE SIMILAR TO TYPICAL HINGE SECTION

Bridge Design Engr.				
Supervisor				
Designed By Y. TAM 9/92				
Checked By M. SHEIKHIZADEH 9/92				
Detailed By L. MEWER 9/92				
Bridge Projects Engr.				
Prelim. Plan By				
Architect/Specialist	DATE	REVISION	BY	APP'D

REGION NO.	STATE	FED. AID PROJ. NO.	SHEET NO.	TOTAL SHEETS
10	WASH.			
JOB NUMBER 92W070		I-IM-405-3(791)		
4161				

BRIDGE AND STRUCTURES

H. WYNT UWIN — STATE OF WASHINGTON — REGISTERED PROFESSIONAL ENGINEER — EXPIRES 12/17/93
9-9-92

[405_56WROOT:\FGB\DIAPHRAGM.FGB: 1 08-SEP-92

Washington State Department of Transportation

SR 405
NORTHUP TO BOTHEL
HOV AND SC&DI-STAGE 1
BNRR OVERCROSSING 405/56W

PRESTRESSED GIRDER
INTERM. HINGE DIAPHRAGM

BRIDGE SHEET NO. 12
SHEET 391 OF 474 SHEETS

SR 405 JOB NO. 7042 SHEET 12

SR405/408

20/181

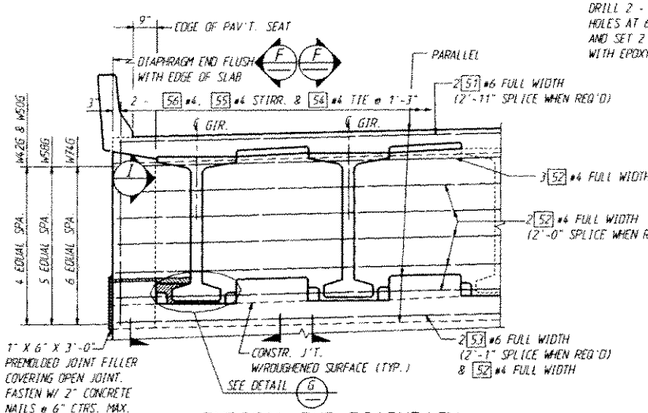

TYPICAL END DIAPHRAGM AT END PIERS

W74G GIRDER SHOWN OTHER GIRDERS SIMILAR.

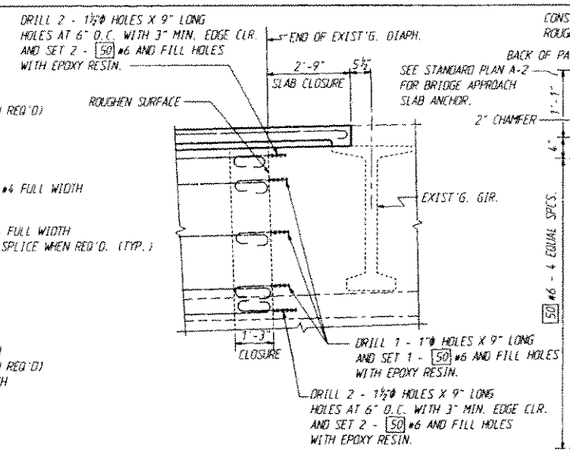

DIAPHRAGM DETAIL

W74G GIRDER SHOWN OTHER GIRDERS SIMILAR.
INSTALL 50 #6 PRIOR TO CONSTRUCT NEW DIAPHRAGM.

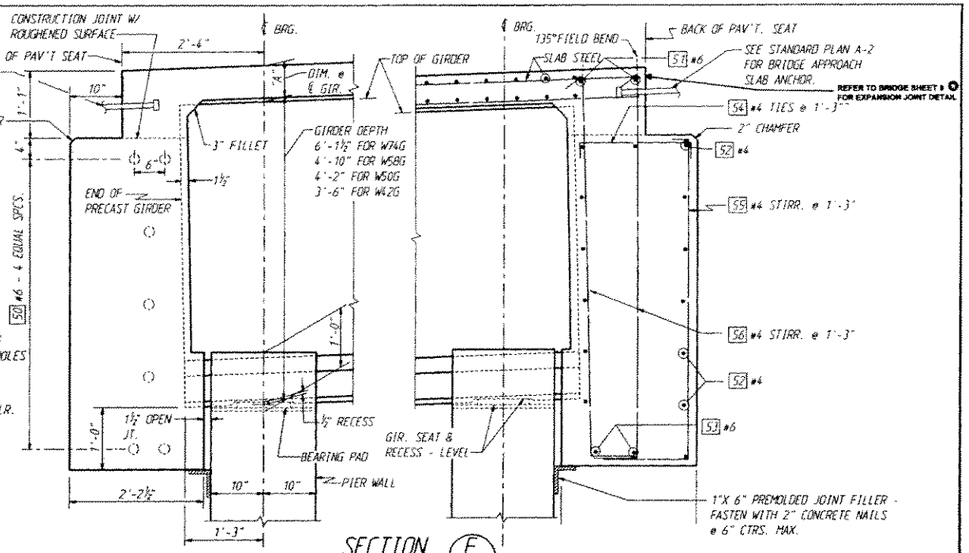

SECTION F

SECTIONS THRU END DIAPHRAGMS AT END PIERS
SEE "GIRDER DETAILS" SHEET FOR DIMENSION "A".
ALL LONGITUDINAL DIMENSIONS ARE NORMAL TO SKEW.

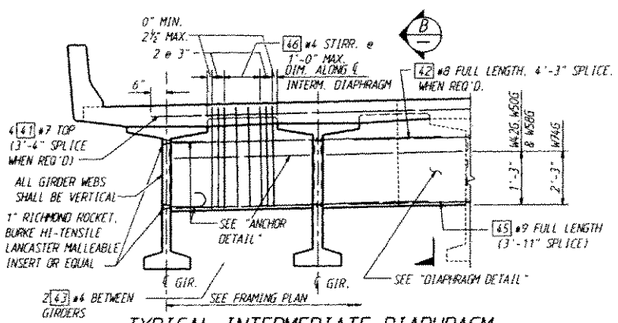

TYPICAL INTERMEDIATE DIAPHRAGM

W74G GIRDER SHOWN OTHER GIRDERS SIMILAR.

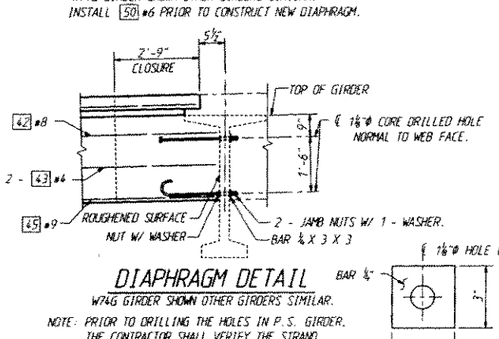

DIAPHRAGM DETAIL

W74G GIRDER SHOWN OTHER GIRDERS SIMILAR.

NOTE: PRIOR TO DRILLING THE HOLES IN P.S. GIRDER, THE CONTRACTOR SHALL VERIFY THE STRAND LOCATIONS, TO INSURE THAT THE STRANDS WILL NOT BE DAMAGED WHEN DRILLING HOLES.

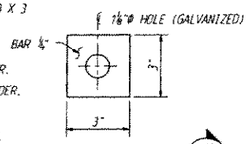

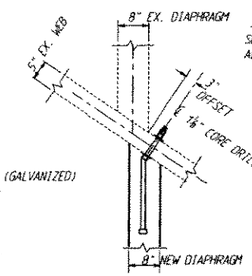

PLAN

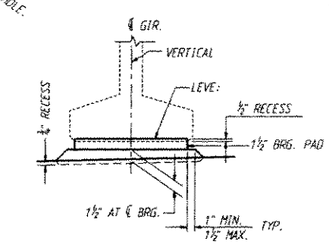

GROUT PAD DETAIL

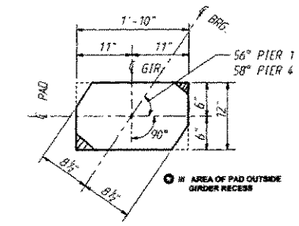

BEARING PAD

LAMINATED ELASTOMERIC BRG. PAD 1½" THICK (2 SHIMS) DUROMETER HARDNESS = 60.

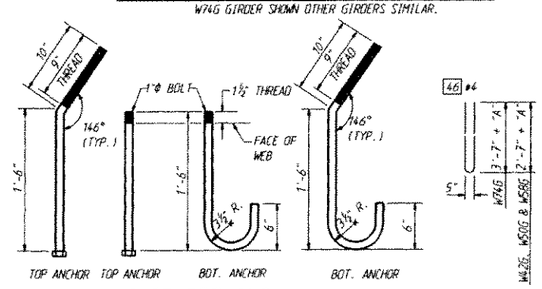

ANCHOR DETAILS

A.S.T.M. A-307

NOTE:
GIRDERS SHALL BE HELD RIGIDLY IN PLACE WHEN DIAPHRAGMS ARE POURED. REINFORCING BARS SHALL BE THREADED THROUGH HOLES IN GIRDERS PRIOR TO PLACING OF EXTERIOR GIRDERS. SEE PLANS FOR 'TRAFFIC BARRIER' DIMENSIONS & LOCATIONS. SEE 'GIRDER DETAILS' SHEET FOR DIMENSION "A".

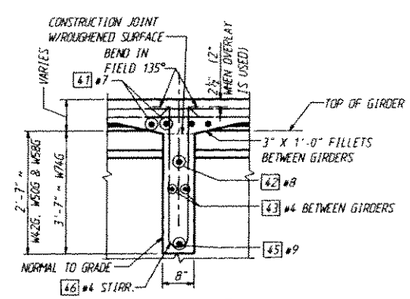

SECTION B

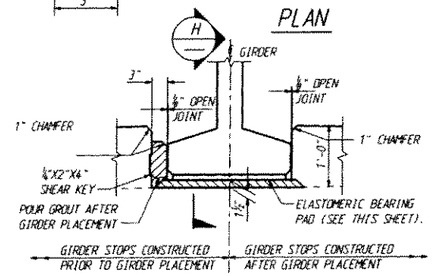

DETAIL G/5

NOTE:
GIRDER STOPS MAY BE CONSTRUCTED PRIOR TO GIRDER PLACEMENT OR CONSTRUCTED AFTER GIRDER PLACEMENT. THE SAME METHOD SHALL BE USED FOR EACH PIER.

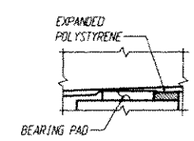

SECTION H

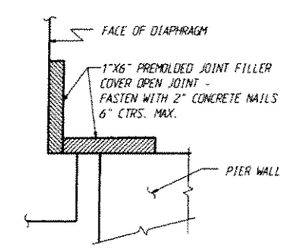

SECTION I

AS BUILT CHANGES (3-25-98)

Bridge Design Engr.				REGION NO.	STATE	FED. AID PROJ. NO.	SHEET NO.	TOTAL SHEETS	BRIDGE AND STRUCTURES
Supervisor				10	WASH.				
Designed By Y. TAM 8/92				JOB NUMBER 92W070		1-IM-405-3(791)			
Checked By M. SHEIKHZADEH 9/92									
Detailed By L. MOWER 8/92									
Bridge Projects Engr.									
Prelim. Plan By									
Architect/Specialist	DATE	REVISION	BY	APP'D	4161				

9-9-92

1405_S6WROOT:(FGB)DIAPHRAGM_DET.FGB:1 09-SEP-92

Washington State Department of Transportation

SR 405
NORTHUP TO BOTHEL
HOV AND SCADI-STAGE 1
BNRR OVERCROSSING 405/56W

DIAPHRAGM DETAILS

BRIDGE SHEET NO. 13
SHEET 392 OF 474 SHEETS

SR 405 JOB NO. 7042 SHEET 13

SA 405/408

207/180

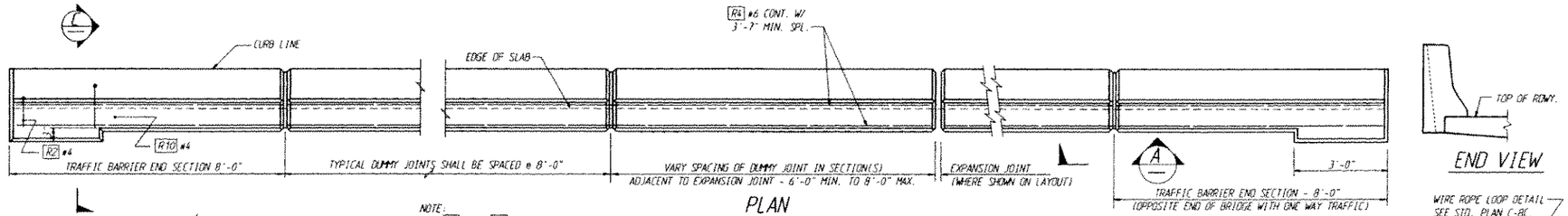

PLAN
TRAFFIC BARRIER

BARRIER CONTINUOUS BETWEEN ROADWAY EXPANSION JOINTS. CONSTRUCTION JOINTS WITH SHEAR KEYS ARE PERMISSIBLE AT DUMMY JOINT LOCATIONS. FORM JOINTS BETWEEN DUMMY JOINTS SHALL NOT BE PERMITTED.

NOTE:
FOR W2 #4 & W1 #5 DETAILS SEE STD. PLAN D-2e OR WING WALL PLAN.

END VIEW

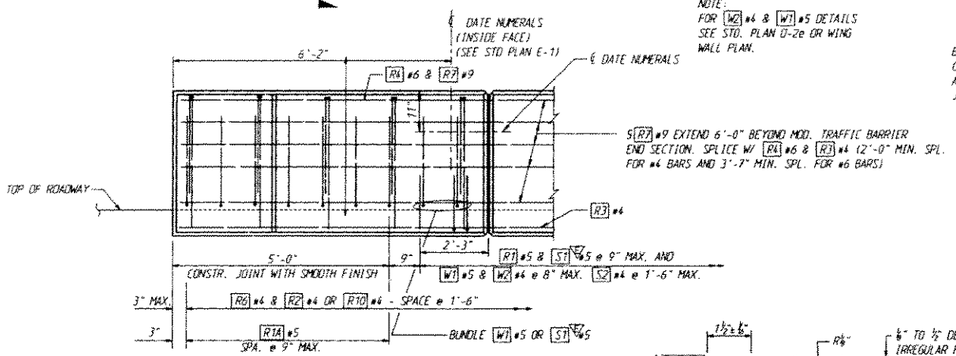

OUTSIDE ELEVATION
END OF MODIFIED TRAFFIC BARRIER FOR DESIGN F GUARDRAIL ANCHORAGE

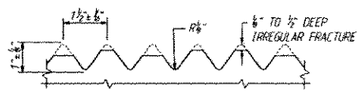

FRACTURED FIN FINISH

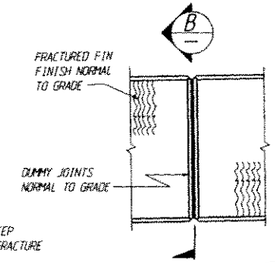

VIEW A

ALL CHAMFERS ¼".
SEE "LAYOUT" FOR APPLICABLE SURFACE FINISH.

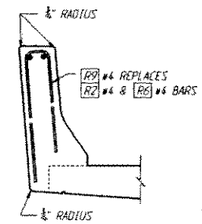

SLIPFORM ALTERNATE

SEE TYPICAL SECTION - TRAFFIC BARRIER FOR ADDITIONAL DETAILS

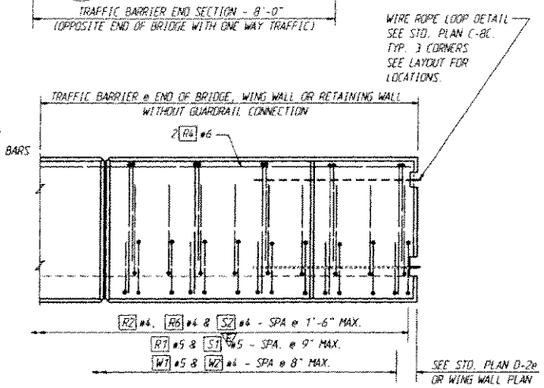

OUTSIDE ELEVATION
END OF TRAFFIC BARRIER

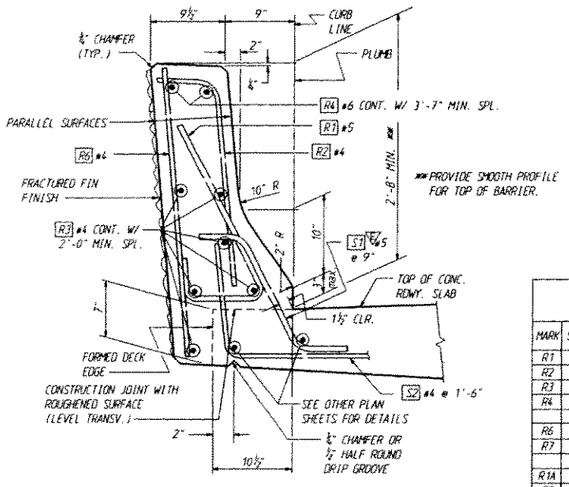

TYPICAL SECTION - TRAFFIC BARRIER

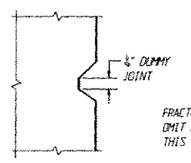

SECTION 2-2

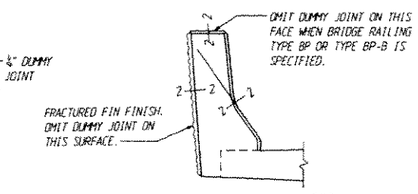

SECTION B

TRAFFIC BARRIER BAR LIST

ALL REINFORCING SHALL BE AASHTO M31, GR. 60.

MARK	SIZE	LENGTH	
R1	5	3'-1"	
R2	4	2'-9"	
R3	4	(A)	STR.
R4	6	(A)	STR.
R6	4	2'-11"	STR.
R7	9	12'-6"	
R1A	5	(A)	
R9	4	5'-6"	
R10	4	3'-2"	

BENDING DIAGRAM (ALL DIMENSIONS ARE OUT TO OUT)

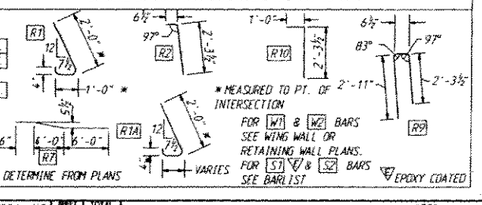

* MEASURED TO PT. OF INTERSECTION

FOR W1 & W2 BARS SEE WING WALL OR RETAINING WALL PLANS.
FOR S1 & S2 BARS SEE BARLIST

(A) DETERMINE FROM PLANS

EPOXY COATED

Bridge Design Engr.					REGION NO.	STATE	FED. AID PROJ. NO.	SHEET NO. / TOTAL SHEETS
Supervisor					10	WASH.		
Designed By Y. TAM 9/92					JOB NUMBER		I-IM-405-3(791)	
Checked By H. SHEIKHIZADEH 9/92					92W070			
Detailed By L. MOWER 9/92								
Bridge Projects Engr.								
Prelim. Plan By								
Architect/Specialist	DATE	REVISION	BY	APP'D	4161			

BRIDGE AND STRUCTURES

9-9-92

1405_SGWROOT:\FGB\BARRIER1.FGB: 1 08-SEP-92

Washington State Department of Transportation

SR 405
NORTHUP TO BOTHEL
HOV AND SC&DI-STAGE 1
BNRR OVERCROSSING 405/56W

EAST TRAFFIC BARRIER

BRIDGE SHEET NO. 14

SHEET 393 OF 474 SHEETS

SR 405 JOB NO. 7042 SHEET 14

SR405/408

2-21/129

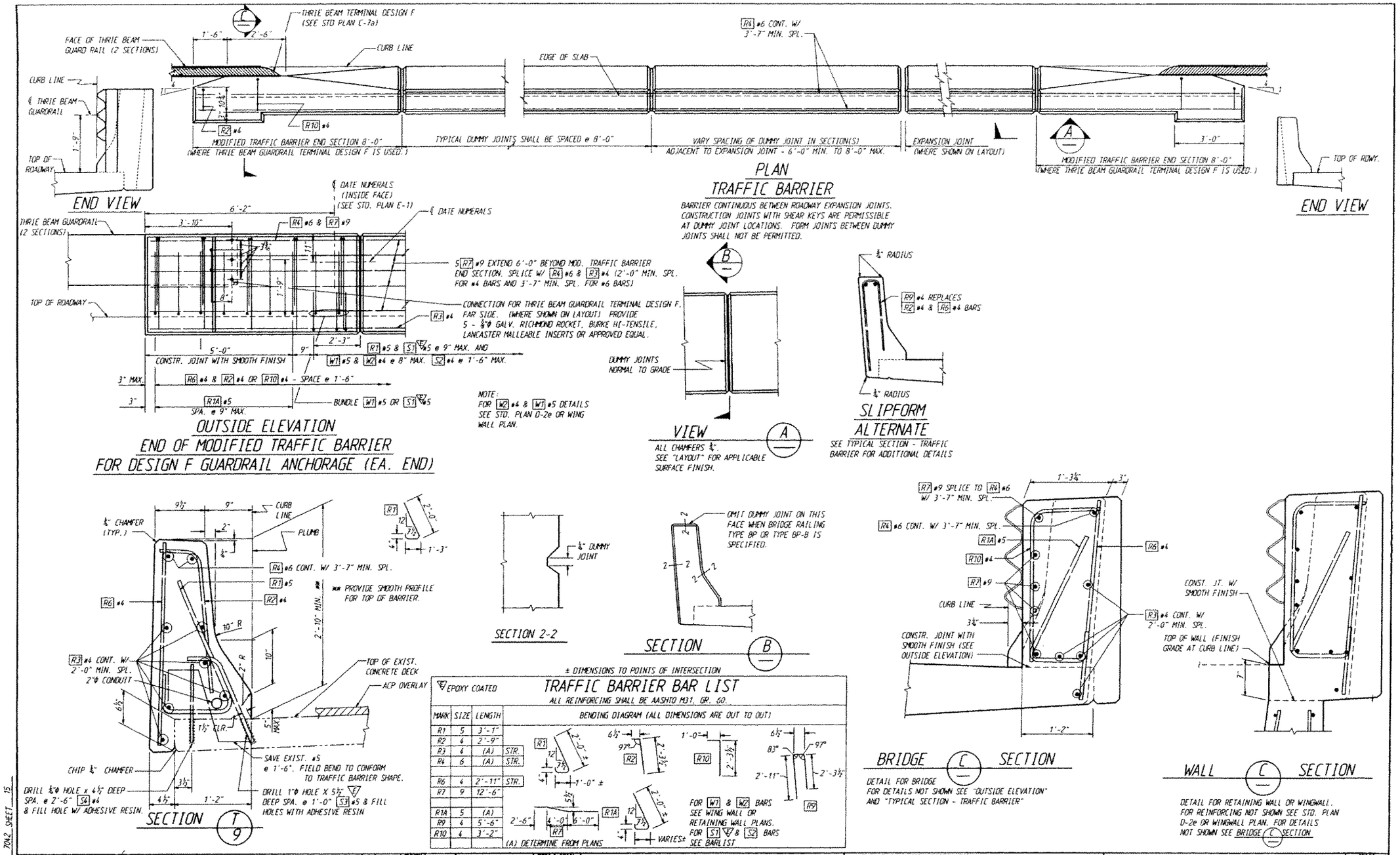

± DIMENSIONS TO POINTS OF INTERSECTION

TRAFFIC BARRIER BAR LIST

EPOXY COATED

ALL REINFORCING SHALL BE AASHTO M31, GR. 60.

MARK	SIZE	LENGTH	BENDING DIAGRAM (ALL DIMENSIONS ARE OUT TO OUT)
R1	5	3'-1"	
R2	6	2'-9"	
R3	4	(A)	STR.
R4	6	(A)	STR.
R6	4	2'-11"	STR.
R7	9	12'-6"	
R1A	5	(A)	
R9	4	5'-6"	
R10	4	3'-2"	

(A) DETERMINE FROM PLANS

FOR W1 & W2 BARS SEE WING WALL OR RETAINING WALL PLANS. FOR S1 & S2 BARS SEE BARLIST

Bridge Design Engr.					
Supervisor					
Designed By Y. TAM 9/92					
Checked By M. SHEIKHZADEH 9/92					
Detailed By L. MEWER 9/92					
Bridge Projects Engr.					
Prelim. Plan By					
Architect/Specialist	DATE	REVISION	BY	APP'D	

REGION NO.	STATE	FED. AID PROJ. NO.	SHEET NO.	TOTAL SHEETS
10	WASH.	1-IM-405-3(791)		

JOB NUMBER 92W070

4161

BRIDGE AND STRUCTURES

9-9-92

1405_S6WROOT.\FGB\BARRIER2.FGB: 1 08-SEP-92

Washington State Department of Transportation

SR 405
NORTHUP TO BOTHEL
HOV AND SC&DI-STAGE 1
BNRR OVERCROSSING 405/56W

WEST TRAFFIC BARRIER

BRIDGE SHEET NO. 15

SHEET 394 OF 474 SHEETS

SR 405 JOB NO. 7042 SHEET 15

SA405/408

2.67/178

S = Bar is included in substructure quantities.
F = Bar to be field welded.
T = Tie or Stirrup.
E = Bar is to be epoxy coated.
V = Bar dimensions vary between dimensions shown on this line and the following line.

MARK NO.	LOCATION	SIZE	NO REQ'D	BEND TYPE	TIE OR STIR	FLD WELD	SUBSTR.	EPOXY COAT	VARIES	NO. EACH	U Ft.	U In.	W Ft.	W In.	X Ft.	X In.	Y Ft.	Y In.	Z Ft.	Z In.	θ1 Deg	θ2 Deg	LENGTH Ft.	LENGTH In.	WEIGHT Lbs.
	SUBSTRUCTURE																								
	PIER 1																								
10	PILE VERTICAL	9	28	50			S				30	4.0											30	4.	2888
11	PILE SPIRAL	4	4	67			S					10.5		3.0							117		$		822
20	PILE CAP BOT.	9	7	50			S				18	9.0											18	9.	446
21	PILE CAP BOT.	5	26	50			S				3	3.0											3	3.	88
22	PILE CAP TOP	6	7	50			S				18	9.0											18	9.	197
23	PILE CAP TOP	5	26	50			S				3	3.0											3	3.	88
24	PILE CAP SIDE	5	6	50			S				18	9.0											18	9.	117
25	PILE CAP GIRDER SEAT	6	4	50			S				18	9.0											18	9.	113
26	PILE CAP GIRDER STOP HORIZ	5	2	50			S		V	1	3	6.0											3	6.	
											2	6.0											2	6.	6
27	PILE CAP GIRDER STOP HORIZ	5	2	50			S				5	8.0											5	8.	12
28	PILE CAP GIRDER STOP HORIZ	5	2	50			S		V	1	3	7.0											3	7.	
											2	7.0											2	7.	6
29	PILE CAP STIRR	4	26	63	T		S				1	5.0	4	3.0	4	3.0		4.5		4.5			10	4.	179
31	PILE CAP GIR STOP TIE	6	14	70	T		S				1	8.5	2	4.0	2	4.0							7	5.	156
32	PILE CAP TIE	4	12	90			S																2	6.	20
	PIER 4																								
10	PILE VERTICAL	9	28	50			S				26	4.0											26	4.	2507
11	PILE SPIRAL	4	4	67			S					10.5		3.0							101		$		710
20	PILE CAP BOT.	9	7	50			S				17	10.0											17	10.	424
21	PILE CAP BOT.	5	25	50			S				3	3.0											3	3.	85
22	PILE CAP TOP	6	7	50			S				17	10.0											17	10.	187
23	PILE CAP TOP	5	25	50			S				3	3.0											3	3.	85
24	PILE CAP SIDE	5	6	50			S				17	10.0											17	10.	112
25	PILE CAP GIRDER SEAT	6	4	50			S				17	10.0											17	10.	107
26	PILE CAP GIRDER STOP HORIZ	5	2	50			S		V	1	3	11.0											3	11.	
											2	11.0											2	11.	7
27	PILE CAP GIRDER STOP HORIZ	5	2	50			S				5	6.0											5	6.	11
28	PILE CAP GIRDER STOP HORIZ	5	2	50			S		V	1	2	6.0											2	6.	
											1	6.0											1	6.	4
29	PILE CAP STIRR	4	25	63	T		S				1	5.0	4	3.0	4	3.0		4.5		4.5			10	4.	173
31	PILE CAP GIR STOP TIE	6	14	70	T		S				1	8.0	2	4.0	2	4.0							7	4.	154
32	PILE CAP TIE	4	12	90			S																2	6.	20
	INTERMEDIATE DIAPHRAGMS																								
41	DIAPHR TOP AT ALL SPANS	7	16	50							18	5.0											18	5.	602
42	DIAPHR MIDDLE SPAN 1	8	2	50							17	6.0											17	6.	93
42	DIAPHR MIDDLE SPAN 2	8	1	50							17	3.5											17	4.	46
42	DIAPHR MIDDLE SPAN 3	8	1	50							17	1.0											17	1.	46
43	DIAPHR MIDDLE ALL SPANS	4	16	50							8	3.0											8	3.	88
45	DIAPHR BOTTOM SPAN 1	9	2	50							17	6.0											17	6.	119
45	DIAPHR BOTTOM SPAN 2	9	1	50							17	3.5											17	4.	59
45	DIAPHR BOTTOM SPAN 3	9	1	50							17	1.0											17	1.	58
46	DIAPHR STIRR AT ALL SPANS	4	88	71								5.0	3	5.0	3	5.0							7	0.	411
	END DIAPHRAGM AT PIERS 1&4																								
50	GROUT INTO EXIST STRUCTURE	6	14	51							1	11.0											2	7.	54
51	PIER 1 AT TOP	6	2	51							22	5.0											23	1.	69
51	PIER 4 AT TOP	6	2	51							20	11.0											21	7.	65
52	PIER 1 AT SIDE TOP BOT.	4	10	51							18	11.0											19	5.	130
52	PIER 4 AT SIDE TOP BOT.	4	10	51							18	0.0											18	6.	124
53	PIER 1 AT BOT.	6	2	51							18	11.0											19	7.	59
53	PIER 4 AT BOT.	6	2	51							18	0.0											18	8.	56
54	PIERS 1&4 PAVEMENT SEAT TIE	4	32	56	T						1	8.0											2	3.	48
55	PIERS 1&4 STIRR	4	32	80	T						4	8.0		8.0	1	6.0		2.0		2.0	90	90	6	7.	141
56	PIERS 1&4 STIRR	4	64	54	T						6	7.0											6	11.	296
	FOOTING AT PIERS 2&3																								
61	FOOTING BOT. PIERS 2&3	9	56	50			S				12	9.0											12	9.	2428
62	FOOTING BOT. PIERS 2&3	9	42	50			S				17	9.0											17	9.	2535
63	FOOTING TOP PIERS 2&3	6	38	50			S				12	9.0											12	9.	728
64	FOOTING TOP PIERS 2&3	6	28	50			S				17	9.0											17	9.	746
	COLUMN AT PIERS 2&3																								
70	SPIRAL AT TOP BOT.	5	4	67			S				2	9.0		3.0							18		$		637
71	SPIRAL AT MIDDLE PIER 2	5	1	67			S				2	9.0		3.5							82		$		725
72	SPIRAL AT MIDDLE PIER 3	5	1	67			S				2	9.0		3.5							77		$		681
73	VERTICAL AT PIER 2	11	16	56			S				35	1.0											38	5.	3266
74	VERTICAL AT PIER 3	11	16	56			S				33	9.0											37	1.	3152
	CRASH WALL																								
75	HORIZ. BTWN COLUMNS	6	24	50			S				17	3.0											17	3.	622
76	HORIZ. BTWN COLUMNS	5	28	50			S				17	3.0											17	3.	504
77	VERTICAL AT BOTH SIDES	4	48	50			S				11	9.0											11	9.	377
78	VERTICAL AT NEW FTG	6	10	54			S				10	6.0											11	4.	170
79	VERTICAL AT EXISTING FTG	6	8	50			S				8	9.0											8	9.	105
80	GROUT INTO EXIST COL	6	10	80			S				3	0.0		11.0		0.0		3.0		3.0	142	0	4	7.	69
	CROSS BEAM AT PIERS 2 & 3																								
81	STIRRUP AT PIERS 2&3	5	92	61	T		S				3	6.0	3	3.0	3	3.0		6.0		6.0			10	7.	1016
82	TOP OF CROSS BEAMS	10	20	91			S		V	2													23	5.	
																							20	8.	1897
83	BOT. OF CROSS BEAMS	8	16	51			S		V	2	23	6.0											24	5.	
											20	9.0											21	8.	984
84	SIDE OF CROSS BEAMS	5	12	80			S		V	6	23	5.0		0.0	3	4.0		0.0		2.5		57	26	4.	
											20	8.0		0.0	3	4.0		0.0		2.5		123	23	11.	314
85	GROUT INTO EXIST STRUCTURE	8	12	51			S				5	8.0											6	7.	211
86	GROUT INTO EXIST STRUCTURE	5	8	50			S				3	5.0											3	5.	41
87	TOP OF CROSS BEAM TIE	5	46	56	T		S				4	7.0											5	4.	256
88	GROUT INTO EXIST STRUCTURE	6	14	51			S				3	4.0											4	0.	84
	HINGE DIAPHRAGM AT PIERS 2&3																								
90	HINGE BAR VERTICAL	9	40	54			S				6	6.0											7	10.	1065
91	VERTICAL BTWN GIR ENDS	4	88	54							4	10.5											5	5.	318
92	STIRRUPS ALONG HINGE DIAPHR	4	38	63	T						1	9.0	3	9.5	3	9.5		5.0		5.0			9	10.	250
93	HORIZ BTWN GIR ENDS	4	24	65							3	1.0	3	6.0		0.0							6	5.	103
94	HORIZ BTWN EXT GIR ENDS	4	8	64					V	2	3	5.0	2	0.0	3	5.0		0.0					8	7.	
											3	5.0	2	3.0	3	5.0		0.0					8	10.	47
95	HORIZ SIDE OF DIAPHR	5	16	51					V	4	18	2.0											18	9.	
											18	5.0											19	0.	315
96	GROUT INTO EXIST DIAPHR	6	1	51							3	4.0											4	0.	6
	ROADWAY SLAB																								
110	TRANSV. TOP ALL SPANS	5	473	52				E	V	1	18	5.0											19	7.	
											17	8.0											18	10.	9476
111	TRANSV. TOP SPAN 1	5	13	51				E	V	1	18	5.0											19	0.	
											8	10.0											9	5.	193
112	TRANSV. TOP SPAN 1	5	11	51				E	V	1	8	10.0											9	5.	
											5	6.0											6	1.	89
113	TRANSV. TOP SPAN 3	5	18	51				E	V	1	17	8.0											18	3.	
											9	0.0											9	7.	281
114	TRANSV. TOP SPAN 3	5	11	51				E	V	1	9	0.0											9	7.	
											5	6.0											6	1.	90
120	TRANSV. BOT. ALL SPANS	5	478	51							17	0.0											17	7.	8766
121	TRANSV. BOT. SPAN 1	5	13	51					V	1	17	0.0											17	7.	
											8	10.0											9	5.	183
122	TRANSV. BOT. SPAN 1	5	11	51				E	V	1	8	10.0											9	5.	
											5	6.0											6	1.	89
123	TRANSV. BOT. SPAN 3	5	13	51				E	V	1	17	0.0											17	7.	
											9	0.0											9	7.	184
124	TRANSV. BOT. SPAN 3	5	11	51				E	V	1	9	0.0											9	7.	
											5	6.0											6	1.	90
140	TOP LONGIT. ALL SPANS	5	108	50				E			40	0.0											40	0.	4506
150	TOP AT PIERS 2&3	6	20	50				E			51	0.0											51	0.	1532
151	TOP AT PIERS 2&3	6	10	50				E			41	0.0											41	0.	616
152	TOP AT PIERS 2&3	6	18	50				E			28	0.0											28	0.	757
160	BOT. LONGIT. ALL SPANS	5	170	50							40	0.0											40	0.	7092
	TRAFFIC BARRIERS																								
S1	AT WIDENING STRUCTURE	5	310	69				E				6.0		9.0	1	8.0		6.0		0.			2	8.	862
S2	AT WIDENING STRUCTURE	4	163	69							3	0.0		2.0	1	8.0		0.0					4	7.	499
S3	AT EXISTING STRUCTURE	5	232	69				E				6.0		9.0	1	8.0		0.0					2	3.	547
S4	AT EXISTING STRUCTURE	4	97	50							1	8.0											1	8.	108

STEEL REINFORCING BAR QUANTITIES NOT INCLUDED IN THIS BAR LIST

TRAFFIC BARRIER
BRIDGE GRATE INLETS
RETAINING WALL

BENDING DIAGRAMS

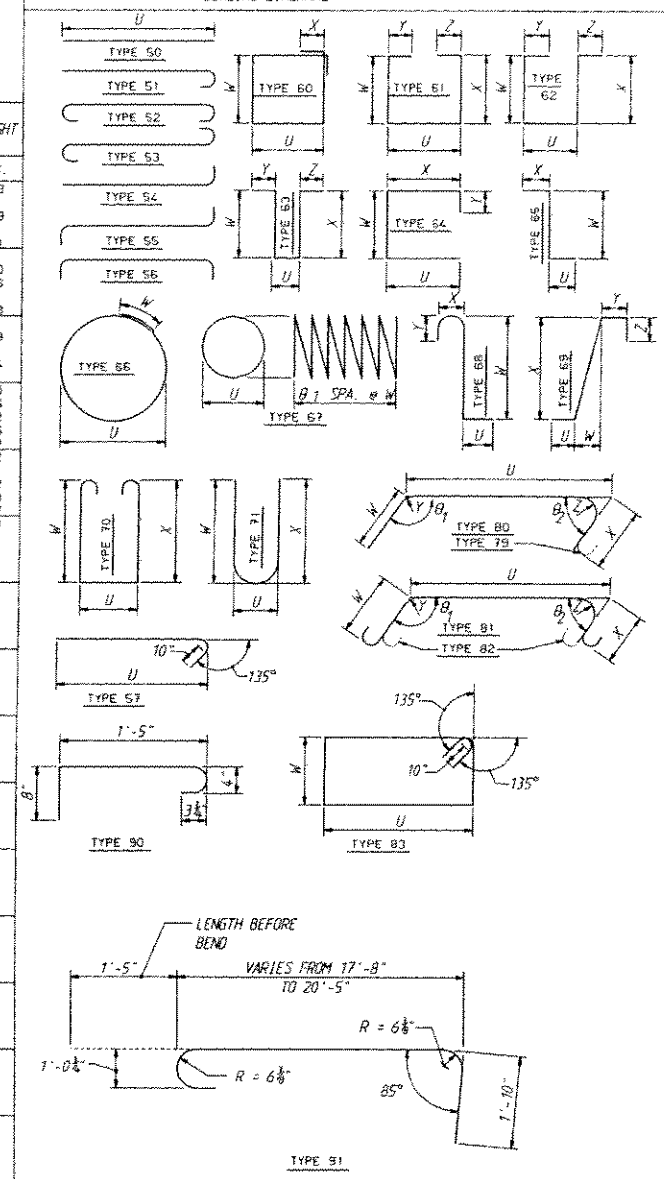

NOTE:

1. ALL REINFORCING BARS ON THIS SHEET SHALL BE AASHTO M-31 UNLESS SHOWN OTHERWISE.
2. REINFORCING FOR TRAFFIC BARRIERS NOT SHOWN IN THIS BAR LIST. SEE TRAFFIC BARRIER SHEET.
3. BEND FOR TRANSVERSE BARS DUE TO ROADWAY CROWN CONDITIONS HAVE NOT BEEN SHOWN. THESE BARS SHALL BE BENT AS REQUIRED TO CONFORM TO THE CONFIGURATION OF THE STRUCTURE.

$ NUMBER AND LENGTH OF BARS TO BE DETERMINED BY THE CONTRACTOR FROM PLANS.

SR 405 JOB NO. 7042 SHEET 1G

Bridge Design Engr. [signature] 9-92					
Supervisor [signature] 9-92					
Designed By Y. TAM 8/92					
Checked By L. MOWER 9/92					
Detailed By L. MOWER 8/92					
Bridge Plan. Engr.					
Prelim. Plan By					
Architect/Specialist	DATE	REVISION	BY	APP'D	

REGION NO.	STATE	FED. AID PROJ. NO.	SHEET NO.	TOTAL SHEETS
10	WASH.	1-IM-405-3(791)		
JOB NUMBER 92W070				
4161				

BRIDGES AND STRUCTURES

I405_56WROOT:[FGB]BR56W_BAR.FGB;1 09-SEP-92

Washington State Department of Transportation

SR 405
NORTHUP TO BOTHEL
HOV AND SC&DI-STAGE 1
BNRR OVERCROSSING 405/56W

BARLIST

BRIDGE SHEET NO. 16
SHEET 395 OF 474 SHEETS

SR 405/408 207/177

BRIDGE INSPECTION REPORT

BATS 4 0 2 1 **Status** Committed Ver Date 10 / 20 / 2003 Agency Washington State

Bridge No.	405/56E	Route	00405	Structure Type	CTB
Bridge Name	BN RR OC (NP)	MilePost	20.00	Intersecting	NP RY
Structure ID	0004978A			Location	1.9 N JCT SR 908

Inspector's Signature MNA IDent# G0008 Co-Inspector's Signature EJF

Inspection Frequency 24
Inspection Date 10/13/2003
Inspection Hours 1.50

5		Structural Adqcy	(657)	6	7	SuperStructure	(671)	1		Bridge Rails	(684)
8		Deck Geometry	(658)			Curbs	(672)	0		Transition	(685)
8		Underclearance	(659)			Sidewalks	(673)	1		Guardrails	(686)
5		Operating Level	(660)			Paint	(674)	0		Terminals	(687)
8		Alignment Adqcy	(661)	2		Number Utilities	(675)	N		Revise Rating	(688)
9		Waterway Adqcy	(662)	7		Substructure	(676)			Repair Flag	(689)
6		DeckOverall	(663)	9		Chan/Protection	(677)			Card Check Flag	(690)
9		Drains Condition	(664)	9		Culvert	(678)			Photos Flag	(691)
		Drain Status	(665)	N		Pier/Abut/Protect	(679)			Seasonal Code	(692)
		Deck Scaling	(666)	N		Scour	(680)			Soundings Flag	(693)
0		Scaling Percent	(667)	6	8	Aproach/Rdwy	(681)			Measure Clearance	(694)
		Deck Rutting	(669)	9		Retaining Walls	(682)			Monitor Structure	(695)
		Exposed Rebar	(670)	9		Pier Protection	(683)				

1956		Year Built
1994		Year Rebuilt
F	40	Operating Rating
F	24	Inventory Rating
A		Open Closed Posted
99' 99"		Vertical Over Deck
26' 02"		Vertical Under
R		Vertical Under Code
78.12		Sufficiency Rating
0		Deficiency Flag

Element	Element Description	Total	Units	Env	State1	State2	State3	State4
12	Concrete Deck	16,318	SF	3	16,318	0	0	0
26	Concrete Deck w/Coated Bars	4,378	SF	3	2,178	2,200	0	0
110	Concrete Girder	2,985	LF	3	2,985	0	0	0
202	Steel Column/Pile	1	EA	3	0	0	1	0
205	Concrete Column / Pile	44	EA	3	44	0	0	0
215	Concrete Abutment	253	LF	3	253	0	0	0
234	Concrete Pier Cap / Crossbeam	243	LF	3	243	0	0	0
321	Concrete Approach Slab	2	EA		2	0	0	0
331	Concrete Bridge Railing	398	LF	3	398	0	0	0
404	Compression Seal / Concrete Header	248	LF	3	248	0	0	0
800	Asphaltic Concrete (AC) Overlay	16,318	SF	3	16,316	2	0	0

0	Bridge orientation is South to North. CAUTION - Very steep concrete covered abutment slopes.
12	CONCRETE DECK - SOFFIT - Diagonal leaching cracks ay abutments. Transverse leaching cracks in soffit.
26	CONCRETE DECK w/ COATED BARS - Located in the East (ramp) lane and East shoulder. Transverse crack throughout (see photo #6). SOFFIT - Transverse leaching cracks.
110	CONCRETE GIRDER - Hairline vertical cracks in the webs.
115	PRESTRESS CONCRETE GIRDER - Transverse leaching cracks in some of the top flanges. Several patches in the flanges throughout.
202	STEEL COLUMN/PILE - Located at South abutment under Girder 1C. Pile is rusting.
215	CONCRETE ABUTMENT - Vertical cracks in both abutments. Bottom of abutment caps exposed due to sloughing of the embankments.
321	CONCRETE APPROACH SLAB - Covered with ACP (see Note 800).
331	CONCRETE BRIDGE RAILING - Vertical and leaching cracks and pattern cracks throughout. 2 SF spall x 6" deep at Southwest corner, outside face.
404	COMPRESSION SEAL - Both headers are rutted. Both headers have been patched in the left lane (COMPLETED REPAIR #13360 verified 10/13/2003, see photos #1, #4, and #5). 6" x 6" spall in North header in the right (ramp) lane. Some of the seal is torn at both abutments.
675	UTILITIES - Two 4"ø galvanized conduit between Girders A and B.
685	TRANSITION - Not nested thrie-beam, not to current standards.
687	TERMINAL - Not slotted, not to current standards.
691	PHOTOS - Roadway deck taken 10/13/2003 replaces blurry roadway deck taken 12/4/2001. Elevation taken 12/4/2001.
800	ASPHALTIC CONCRETE (AC) OVERLAY - 3" ACP. Rutting in wheel lines. Small area of raveling asphalt over the South

BRIDGE INSPECTION REPORT

BATS 4 0 2 1 **Status** Committed Ver Date 11 / 13 / 2001 Agency Washington State

Bridge No. 405/56E
Bridge Name BN RR OC (NP)
Structure ID 0004978A

Page 1 of 2

Route 00405
MilePost 20.00

Structure Type CTB
Intersecting NP RY
Location 1.9 N JCT SR 908

Inspector's Signature RLS IDent# A1044

Co-Inspector's Signature RMP

Inspection Frequency 24 [24]
Inspection Date 12/4/2001
Inspection Hours 1.00

6		Structural Adqcy	(657)	6		SuperStructure	(671)	1		Bridge Rails	(684)
8		Deck Geometry	(658)	9		Curbs	(672)	1	0	Transition	(685)
8		Underclearance	(659)	9		Sidewalks	(673)	1		Guardrails	(686)
5		Operating Level	(660)	9		Paint	(674)	1	0	Terminals	(687)
8		Alignment Adqcy	(661)	2		Number Utilities	(675)	N		Revise Rating	(688)
9		Waterway Adqcy	(662)	7		Substructure	(676)	Y		Repair Flag	(689)
6		DeckOverall	(663)	9		Chan/Protection	(677)			Card Check Flag	(690)
9		Drains Condition	(664)	9		Culvert	(678)			Photos Flag	(691)
1		Drain Status	(665)	N		Pier/Abut/Protect	(679)			Seasonal Code	(692)
N		Deck Scaling	(666)	N		Scour	(680)			Soundings Flag	(693)
0		Scaling Percent	(667)	6		Aproach/Rdwy	(681)			Measure Clearance	(694)
8		Deck Rutting	(669)	9		Retaining Walls	(682)			Monitor Structure	(695)
8		Exposed Rebar	(670)	9		Pier Protection	(683)				

1956		Year Built
1994		Year Rebuilt
F	64	Operating Rating
F	39	Inventory Rating
A		Open Closed Posted
99' 99"		Vertical Over Deck
26' 02"		Vertical Under
R		Vertical Under Code
92.61		Sufficiency Rating

Element	Element Description	Total	Units	Env	State1	State2	State3	State4
12	Concrete Deck	16,318	SF	3	0	16,318	0	0
26	Concrete Deck w/Coated Bars	4,378	SF	3	4,378	0	0	0
110	Concrete Girder	2,985	LF	3	2,985	0	0	0
201	Steel Column/Pile-Weathering	9	EA	3	9	0	0	0
205	Concrete Column / Pile	16	EA	3	16	0	0	0
215	Concrete Abutment	253	LF	3	253	0	0	0
234	Concrete Pier Cap / Crossbeam	243	LF	3	243	0	0	0
321	Concrete Approach Slab	2	EA		2	0	0	0
331	Concrete Bridge Railing	398	LF	3	398	0	0	0
404	Compression Seal / Concrete Header	248	LF	3	242	0	6	0
800	Asphaltic Concrete (AC) Overlay	16,318	SF	3	0	16,318	0	0

0	Very steep concrete covered abutment slopes.
12	800: ACP is rutting in wheel lines with some ravelling of the longitudinal meet line joint. 20" dia. gouge/pothole in the inside West lane near pier 1. Soffit has diagonal and transverse leaching cracks at abutments. Open repetitive transverse cracks in east side. Full length pour joint crack. Many transverse leaching cracks some with rust stains and some diagonal leaching cracks in bottom of deck Ramp lane has no ACP, surface looks like LMC, & has many transverse cracks throughout
110	Hairline vertical cracks in CTB webs - vertical leaching cracks at CTB and abutment interface - leaching along CTB fillets
201	4 Piles on NE side 5 on SE side
205	Pattern cracks in concrete columns - some are leaching - single steel "H" pile used to support the end of beam 1C RR Collision Wall: Vertical cracks
215	Vertical leaching cracks in both abutments. Vertical cracks in end diaphragms. Drainage pipe at North abutment to stop erosion. Heavy visqueen sheet used to hold back fill behind the too short abutment diaphragm. The South and North abutment widening is supported on 4 rusty steel columns, which are exposed up to 2'. South backwall is undermined from sloughing fill.
331	Vertical leaching cracks and black stained map cracks in concrete barrier, also traffic scrapes throughout. Longit. Leaching in the railbase.
404	Compression seal leaks at spalled and D-cracked areas. Headers are rutted. South header spalled 4"x6"x2" in the LH lane - Repaired. North header has spalls and patched spalls in the LH lanes as follows: 1.) 2"X8"X14" across the joint with a rebar exposed. 2.) 2"x6"x10" South side spall with rebar exposed. 3.) Two spalls @ North joint (See Photo #4). Appears that the North header has been repaired since last inspection, but there are 2 new spalls in the mainline traffic.
675	2 - 4" galv. conduit in the West bay.
681	Slight settlement at South approach. Transverse open 2" wide crack at ends of buried approach slabs and some 3"x12" potholes.
685	Transition not to current AASHTO code, not Thrie-beam.
687	Terminal not to current AASHTO code, not slotted.

Printed On 1/11/2002

BATS Codes 4 0 2 0

BRIDGE INSPECTION REPORT

Agency WASHINGTON STATE

RLS

Printed On 12/03/1999

Bridge No.	405/56E	Structure Type	CTB
Bridge Name	BN RR OC (NP)	Route 00405	Intersecting NP RY
Structure ID	0004978A	MilePost 20	Location 1.9 N JCT SR 908

Inspection Date 12/01/1999
Inspection Hours 001.0

Inspector's Signature KRS Indent# B1144 Co-Inspector's Signature MJR

6	Structural Adqcy (501)	9	Drains (509)	1	Bridge Rails (536)	Y	Repair Flag (550)
8	Deck Geometry (502)	9	Curbs (521)	1	Transition (536)		Card Check Flag (551)
8	Underclearance (503)	9	Sidewalks (522)	1	Guardrails (536)		Photos Flag (552)
5	Operating Level (504)	9	Paint (524)	1	Terminals (536)		Seasonal Code (553)
8	Alignment Adqcy (505)	9	Chan/Protection (529)	2	Number Utilities (525)		Soundings Flag (554)
9	Waterway Adqcy(506)	N	Pier/Abut/Protect (531)	N	Revise Rating (540)		Measure Clearance (555)
6	DeckOverall (507)	N	Scour (532)	24	Inspection Frequency(539)		Monitor Structure (556)
6	Superstructure (513)	6	Aproach/Rdwy (533)				
7	Substructure (526)	9	Retaining Walls (534)	N 0 8 8			
9	Culvert (530)	9	Pier Protection (535)		Deck Scaling(512)	92.61	0 Sufficiency Rating

Elem	Element Description	Total	Units	Env	State1	State2	State3	State4	State5
12	Concrete Deck	16318	SF	3	0	16318	0	0	0
26	Concrete Deck-w/Coated Bars	4378	SF	3	4378	0	0	0	0
110 ~~116~~	Concrete Stringer	2985	LF	3	2985	0	0	0	0
201	Steel Col/Pile Ext-Weathering	1	EA	3	1	0	0	0	0
205	Concrete Col/Pile Extension	16	EA	3	16	0	0	0	0
210	Concrete Pier Wall	205	LF	3	205	0	0	0	0
215	Concrete Abutment	253	LF	3	253	0	0	0	0
234	Concrete Pier Cap	243	LF	3	243	0	0	0	0
331	Concrete Bridge Railing	398	LF	3	398	0	0	0	0
358	Deck Cracking	1	EA	3	0	1	0	0	0
359	Soffit of Concrete Decks/Slabs	1	EA	3	0	1	0	0	0
404	Compression Seal / Concrete Header	248	LF	3	242	0	6	0	0
800	Asphaltic Concrete (AC) Overlay	16318	SF	3	0	16318	0	0	0

0 Very steep concrete covered abutment slopes. Use impact attenuator on this bridge deck.

12 800: ACP is rutting in wheel lines with some raveling of the longitudinal meet line joint. 20" dia. gouge/pothole in the inside West lane near pier 1. Soffit has diagonal and transverse leaching cracks at abutments. Open repetitive transverse cracks in east side. Full length pour joint crack. Many transverse leaching cracks some with rust stains and some diagonal leaching cracks in bottom of deck

110 ~~116~~ Hairline vertical cracks in CTB webs - vertical leaching cracks at CTB and abutment interface - leaching along CTB fillets.

205 Pattern cracks in concrete columns - some are leaching - single steel "H" pile used to support the end of beam 1C

210 Vertical cracks in pier walls. Much grafitti painted on walls.

215 Vertical leaching cracks in both abutments. Vertical cracks in end diaphragms. Drainage pipe at North abutment to stop erosion. Heavy visqueen sheet used to hold back fill behing the too short abutment diaphragm. The south and north abutment widening is supported on 4 rusty steel columns, which are exposed up to 2'. South backwall is undermined from sloughing fill.

331 Vertical leaching cracks and black stained map cracks in concrete barrier, also traffic scrapes throughout. Longit. Leaching in the railbase.

404 Compression seal leaks at spalled and D-cracked areas. Headers are rutted. South header spalled 4"x6"x2" in the LH lane. North header has spalls and patched spalls in the LH lanes as follows: 1.) 2"X8"X14" across the joint with a rebar exposed. 2.) 2"x6"x10" north side spall with rebar exposed 3.) 2"x6"x14" across the joint. Photos taken.

525 2x4" galv. In east bay and 2x6" in the west bay.

533 Slight settlement at south approach. Transverse open 2" wide crack at ends of buried approach slabs and some 3"x12" potholes.

Priority	Repair Description	Date Noted
2	Repair spalled and broken areas in the abutment headers to stop traffic impacts and additional header damage and joint leakage.	12/1/1999

BATS Codes 6 0 2 1

BRIDGE INSPECTION REPORT

Agenc WASHINGTON STATE

Printed On 06/19/1997

Bridge No.	405/56E		Structure Type	CTB	
Bridge Name	BN RR OC (NP)	Route	00405	Intersecting	NP RY
Structure ID	0004978A	MilePost	020.00	Location	1.9 N JCT SR 908

Inspector's Signature DP Indent# A1039 Co-Inspector's Signature WLM

Inspection Date 06/10/1997
Inspection Hours 01.0

6	Structural Adqcy (501)	9	Drains (509)	1	Bridge Rails (536)	N	00 8 8		
8	Deck Geometry (502)	9	Curbs (521)	1	Transition (536)				Deck Scaling(512)
8	Underclearance (503)	9	Sidewalks (522)	1	Guardrails (536)	7	1987/06/01		Chloride Sample
5	Operating Level (504)	9	Paint (524)	1	Terminals (536)				Delamination
8	Alignment Adqcy (505)	9	Chan/Protection (529)	2	Number Utilities (525)				Rebar Sample
9	Waterway Adqcy(506)	N	Pier/Abut/Protect (531)	N	Revise Rating (540)				Paint Year
6	DeckOverall (507)	N	Scour (532)	2	55 Operating Rating		1956		Year Built
6	Superstructure (513)	6	Aproach/Rdwy (533)	2	36 Inventory Rating		1994		Year Rebuilt
7	Substructure (526)	9	Retaining Walls (534)	24	Inspection Frequency(539)		093.68 / 0		Sufficiency Rating
9	Culvert (530)	9	Pier Protection (535)		Inspection Type (538)				

Ele	Element Description	Total	Units	Env	State1	State2	State3	State4	State5
13	ConcDeck Unprotected w/AC Ovlay	16318	SF	3	0	16318	0	0	0
26	ConcDeck Protected w/CoatedBars	4378	SF	3	4378	0	0	0	0
116	Concrete Stringer	2985	LF	3	2985	0	0	0	0
201	Steel Col/Pile Extent Unpainted	1	EA	3	1	0	0	0	0
205	Concrete Col/Pile Extension	16	EA	3	16	0	0	0	0
210	Concrete Pier Wall	205	LF	3	205	0	0	0	0
215	Concrete Abutment	253	LF	3	253	0	0	0	0
234	Concrete Cap	243	LF	3	243	0	0	0	0
302	Compression Joint Seal	248	LF	3	248	0	0	0	0
331	Concrete Bridge Railing	398	LF	3	398	0	0	0	0
358	Deck Cracking	1	EA	3	0	1	0	0	0
359	Soffit	1	EA	3	0	1	0	0	0

13 ACP is rutting in wheel lines with raveling longitudinally - 3" X 18" pothole in West lane exposing the deck near pier 2

116 Hairline vertical cracks in CTB webs - vertical leaching cracks at CTB and abutment interface - leaching along CTB fillets

205 Pattern cracks in concrete columns - some are leaching - single steel "H" pile used to support the end of beam 1C

210 Vertical cracks in pier walls

215 Vertical leaching cracks in both abutments

302 10 feet of compression seal missing at the south end of structure

331 Vertical leaching cracks in concrete barrier - traffic scrapes

358 Many transverse and diagonal cracks in top of concrete deck for ramp

359 Many transverse leaching cracks some with rust stains and some diagonal leaching cracks in bottom of deck

533 Slight settlement at south approach

BRIDGE INSPECTION REPORT

BATS 4 0 2 1 **Status** Committed Ver Date 10 / 20 / 2003 Agency Washington State

Bridge No.	405/56W	Page 1 of 1		Structure Type	PCB
Bridge Name	BN RR OC (NP)	Route	00405	Intersecting	NP RY
Structure ID	0008615C	MilePost	19.98	Location	1.9 N JCT SR 908

Inspector's Signature MNA IDent# G0008 Co-Inspector's Signature EJF

Inspection Frequency 24
Inspection Date 10/13/2003
Inspection Hours 1.50

5		Structural Adqcy	(657)	6	7	SuperStructure	(671)	1		Bridge Rails	(684)
8		Deck Geometry	(658)			Curbs	(672)	1		Transition	(685)
8		Underclearance	(659)			Sidewalks	(673)	1		Guardrails	(686)
5		Operating Level	(660)			Paint	(674)	0		Terminals	(687)
8		Alignment Adqcy	(661)	0		Number Utilities	(675)	N		Revise Rating	(688)
9		Waterway Adqcy	(662)	6	7	Substructure	(676)			Repair Flag	(689)
7		DeckOverall	(663)	9		Chan/Protection	(677)			Card Check Flag	(690)
8		Drains Condition	(664)	9		Culvert	(678)			Photos Flag	(691)
		Drain Status	(665)	N		Pier/Abut/Protect	(679)			Seasonal Code	(692)
		Deck Scaling	(666)	N		Scour	(680)			Soundings Flag	(693)
0		Scaling Percent	(667)	6	8	Aproach/Rdwy	(681)			Measure Clearance	(694)
		Deck Rutting	(669)	9		Retaining Walls	(682)			Monitor Structure	(695)
		Exposed Rebar	(670)	9		Pier Protection	(683)				

1970		Year Built
1994		Year Rebuilt
F	44	Operating Rating
F	26	Inventory Rating
A		Open Closed Posted
99' 99"		Vertical Over Deck
24' 04"		Vertical Under
R		Vertical Under Code
82.11		Sufficiency Rating
0		Deficiency Flag

Element	Element Description	Total	Units	Env	State1	State2	State3	State4
12	Concrete Deck	18,954	SF	3	18,954	0	0	0
115	Prestress Concrete Girder	2,673	LF	3	2,671	2	0	0
205	Concrete Column / Pile	10	EA	3	10	0	0	0
210	Concrete Pier Wall	155	LF	3	155	0	0	0
215	Concrete Abutment	188	LF	3	188	0	0	0
234	Concrete Pier Cap / Crossbeam	188	LF	3	188	0	0	0
310	Elastomeric Bearing	22	EA	3	22	0	0	0
321	Concrete Approach Slab	2	EA	3	2	0	0	0
331	Concrete Bridge Railing	486	LF	3	486	0	0	0
404	Compression Seal / Concrete Header	186	LF	3	186	0	0	0
800	Asphaltic Concrete (AC) Overlay	18,954	SF	3	18,954	0	0	0
9501	Transients	1	FL	3	1	0	0	0

0	Pier 1 is at South Abutment.
12	Transverse leaching cracks in the soffit and overhangs.
115	Girder 2D has a repair in the bottom flange. Spalls in diaphragms at interface with Girders at Piers 2 and 3. Girders at SW and NW corners of the bridge are buried with fill. Vertical cracks at the girder web/end diaphragm interface. Leaching at girder/ diaphragms and soffit interfaces at Girders J and K.
215	Girder stops at South abutment were spalled, worst at D, E, and I. Stops spalled at North abutment at Girders B and H. Dirt and debris at girder seats. Erosion gulley 4 ft. (W) x 3 ft. (D) at Southwest and 3 ft. (W) x 3 ft. (D) at Northwest from roadway runoff. Vertical cracks in South backwall.
321	Covered with ACP.
331	Rusty leaching at rail base construction joints. A few transverse leaching cracks in rail base.
404	Joints have dirt in them and headers are wearing in wheel lines. Header patched at South joint in HOV lane.
687	Terminals are not slotted; do not meet the current standards.
691	Deck and elevation photos taken 12/4/2001.
800	Approximately 2" ACP worn in wheel lines.

Repair No	Priority	Repair Description	Date Noted

Printed On 10/23/2003

BRIDGE INSPECTION REPORT

BATS 4 0 2 1 **Status** Committed Ver Date 12 / 04 / 2001 Agency Washington State

Bridge No. 405/56W
Bridge Name BN RR OC (NP)
Structure ID 0008615C

Route 00405
MilePost 19.98

Structure Type PCB
Intersecting NP RY
Location 1.9 N JCT SR 908

Inspector's Signature RLS IDent# A1044

Co-Inspector's Signature RMP

Inspection Frequency 24
Inspection Date 12/4/2001
Inspection Hours 1.00

5		Structural Adqcy	(657)	6		SuperStructure	(671)	1		Bridge Rails (684)
8		Deck Geometry	(658)	9		Curbs	(672)	1		Transition (685)
8		Underclearance	(659)	9		Sidewalks	(673)	1		Guardrails (686)
5		Operating Level	(660)	9		Paint	(674)	1	0	Terminals (687)
8		Alignment Adqcy	(661)	0		Number Utilities	(675)	N		Revise Rating (688)
9		Waterway Adqcy	(662)	6		Substructure	(676)			Repair Flag (689)
7		DeckOverall	(663)	9		Chan/Protection	(677)			Card Check Flag (690)
8		Drains Condition	(664)	9		Culvert	(678)			Photos Flag (691)
1		Drain Status	(665)	N		Pier/Abut/Protect	(679)			Seasonal Code (692)
N		Deck Scaling	(666)	N		Scour	(680)			Soundings Flag (693)
0		Scaling Percent	(667)	6		Aproach/Rdwy	(681)			Measure Clearance (694)
0		Deck Rutting	(669)	9		Retaining Walls	(682)			Monitor Structure (695)
0		Exposed Rebar	(670)	9		Pier Protection	(683)			

1970	Year Built
1994	Year Rebuilt
F 44	Operating Rating
F 26	Inventory Rating
A	Open Closed Posted
99' 99"	Vertical Over Deck
24' 04"	Vertical Under
R	Vertical Under Code
82.11	Sufficiency Rating

Element	Element Description	Total	Units	Env	State1	State2	State3	State4
12	Concrete Deck	18,954	SF	3	18,954	0	0	0
115	Prestress Concrete Girder	2,673	LF	3	2,648	25	0	0
205	Concrete Column / Pile	10	EA	3	10	0	0	0
210	Concrete Pier Wall	155	LF	3	155	0	0	0
215	Concrete Abutment	188	LF	3	188	0	0	0
234	Concrete Pier Cap / Crossbeam	188	LF	3	188	0	0	0
310	Elastomeric Bearing	22	EA	3	22	0	0	0
321	Concrete Approach Slab	2	EA	3	2	0	0	0
331	Concrete Bridge Railing	486	LF	3	486	0	0	0
404	Compression Seal / Concrete Header	186	LF	3	186	0	0	0
800	Asphaltic Concrete (AC) Overlay	18,954	SF	3	18,954	0	0	0

12	Transverse leaching cracks in the overhangs and soffit concentrated at piers, some have stalactites. Transverse leaching cracks in some girder bays.
115	, 671; Girder 2D has a repair in the bottom flange. Spalled diaphragms at Pier 2. Girders at SW and NW corners of the bridge are buried. Vertical cracks at the girder web/end diaphragm interface. Leaching at girder/ diaphragms and soffit interfaces at Girders J and K.
215	Girder stop are spalled at most of the South girders, worse at D, E, and I. Stops spalled at North Girders B and H. Dirt and debris at girder seats. Erosion gulley 4 ft. (W) x 3 ft. (D) at Southwest and 3 ft. (W) x 3 ft. (D) at Northwest from roadway runoff which is undermining slope protection.
321	Covered with ACP. Some "D" cracking South approach 12 ft. x 4" (W).
331	Rusty leaching at rail base construction joints with stalactites. A few transverse leaching cracks in rail base.
404	Joints have dirt in them and headers are wearing in wheel lines. Header patched at South joint in HOV lane.
664	Drain at Northwest corner and is functioning properly.
681	1/4" settlement in ACP at threshold of concrete approach slab. ACP rutting in wheel lines.
687	Terminals are not slotted and do not meet the current acceptable standard.
691	Deck and elevation photos taken 12/4/2001.
800	Approximately 2" ACP worn in wheel lines and cracked at abutments and approach slabs.

Repair No	Priority	Repair Description	Date Noted

Printed On 1/11/2002

BATS Codes 4 0 2 1

BRIDGE INSPECTION REPORT

Agency WASHINGTON STATE RPH

Printed On 12/13/1999

Bridge No.	405/56W		Structure Type	PCB	
Bridge Name	BN RR OC (NP)	Route	00405	Intersecting	NP RY
Structure ID	0008615C	MilePost	19.98	Location	1.9 N JCT SR 908

Inspector's Signature Kenzo R. Sakamoto KRS Indent# B1144

Co-Inspector's Signature MJR

Inspection Date 12/01/1999
Inspection Hours 001.0

5	Structural Adqcy (501)	9	8 Drains (509)	1	Bridge Rails (536)		Repair Flag (550)
8	Deck Geometry (502)	9	Curbs (521)	1	Transition (536)		Card Check Flag (551)
8	Underclearance (503)	9	Sidewalks (522)	1	Guardrails (536)		Photos Flag (552)
5	Operating Level (504)	9	Paint (524)	1	Terminals (536)		Seasonal Code (553)
8	Alignment Adqcy (505)	9	Chan/Protection (529)	0	Number Utilities (525)		Soundings Flag (554)
9	Waterway Adqcy(506)	N	Pier/Abut/Protect (531)	N	Revise Rating (540)		Measure Clearance (555)
7	DeckOverall (507)	N	Scour (532)	24	Inspection Frequency(539)		Monitor Structure (556)
6	Superstructure (513)	6	Aproach/Rdwy (533)				
6	Substructure (526)	9	Retaining Walls (534)	N 0 0 0			
9	Culvert (530)	9	Pier Protection (535)		Deck Scaling(512)	82.11 0	Sufficiency Rating

Elem	Element Description	Total	Units	Env	State1	State2	State3	State4	State5
12	Concrete Deck	18954	SF	3	18954	0	0	0	0
115	Prestress Concrete Girder	2673	LF	3	2648	25	0	0	0
205	Concrete Col/Pile Extension	10	EA	3	10	0	0	0	0
210	Concrete Pier Wall	155	LF	3	155	0	0	0	0
215	Concrete Abutment	188	LF	3	188	0	0	0	0
234	Concrete Pier Cap	188	LF	3	188	0	0	0	0
310	Elastomeric Bearing	22	EA	3	22	0	0	0	0
321	Concrete Approach Slab	2	EA	3	2	0	0	0	0
331	Concrete Bridge Railing	486	LF	3	486	0	0	0	0
404	Compression Seal / Concrete Header	186	LF	3	186	0	0	0	0
800	Asphaltic Concrete (AC) Overlay	18954	SF	3	18954	0	0	0	0

0 Transient debris and bedding pallets at both abutments.

12 Transverse leaching cracks in the overhangs and soffit concentrated at piers, some have stalactites. Transverse leaching cracks in some beam bays.

115 Girder 2D has a 2 foot long spall with an exposed rebar strand in the bottom flange - spalled beam stops at abutments - spalled diaphragms at pier 3 - PCB's at SW and NW corners of the bridge are buried - vertical cracks at the PCB web/end diaphragm interface. Leaching at girder/ diaphragms and soffit interfaces at girders J and K.

215 Girder stop is spalled at South by girders D, E, AND I. Dirt and debris at beam seats. Erosion gulleys at Southwest and Northwest slopes from roadway run off undermining slope protection.

331 Rusty leaching at rail base construction joints with stalactites. A few transverse leaching cracks in rail base.

404 Joints have dirt in them and headers are wearing in wheel lines.

509 Drain at Northwest corner and is functioning properly.

533 1/4" settlement in ACP at threshold of concrete approach slab. ACP rutting in wheel lines.

800 ACP cracked at abutments and approach slabs - approximately 2" ACP - worn in wheel lines

Priority	Repair Description	Date Noted
1	Continue the repair to clean and epoxy coat exposed pre-stressing strand and patch spall on bottom flange of stringer 2D.	12/1/1999

BATS Codes 6 0 2 1

BRIDGE INSPECTION REPORT

Agenc WASHINGTON STATE

Printed On 06/20/1997

Bridge No.	405/56W			Structure Type	PCB
Bridge Name	BN RR OC (NP)	Route	00405	Intersecting	NP RY
Structure ID	0008615C	MilePost	019.98	Location	1.9 N JCT SR 908

Inspector's Signature OP Indent# A1039

Co-Inspector's Signature WLM

Inspection Date 06/10/1997
Inspection Hours 01.0

6	Structural Adqcy (501)	9	Drains (509)	1	Bridge Rails (536)	N	00 0 0		
8	Deck Geometry (502)	9	Curbs (521)	1	Transition (536)				Deck Scaling(512)
8	Underclearance (503)	9	Sidewalks (522)	1	Guardrails (536)	8	1987/06/01		Chloride Sample
5	Operating Level (504)	9	Paint (524)	1	Terminals (536)				Delamination
8	Alignment Adqcy (505)	9	Chan/Protection (529)	0	Number Utilities (525)				Rebar Sample
9	Waterway Adqcy(506)	N	Pier/Abut/Protect (531)	N	Revise Rating (540)				Paint Year
7	DeckOverall (507)	N	Scour (532)	2	55 Operating Rating		1970		Year Built
6	Superstructure (513)	6	Aproach/Rdwy (533)	2	36 Inventory Rating		1994		Year Rebuilt
6	Substructure (526)	9	Retaining Walls (534)	24	Inspection Frequency(539)		093.68 / 0		Sufficiency Rating
9	Culvert (530)	9	Pier Protection (535)		Inspection Type (538)				

Ele	Element Description	Total	Units	Env	State1	State2	State3	State4	State5
13	ConcDeck Unprotected w/AC Ovlay	18954	SF	3	18954	0	0	0	0
115	P/S Concrete Stringer	2673	LF	3	2648	25	0	0	0
205	Concrete Col/Pile Extension	10	EA	3	10	0	0	0	0
210	Concrete Pier Wall	155	LF	3	155	0	0	0	0
215	Concrete Abutment	188	LF	3	188	0	0	0	0
234	Concrete Cap	188	LF	3	188	0	0	0	0
302	Compression Joint Seal	186	LF	3	186	0	0	0	0
310	Elastomeric Bearing	22	EA	3	22	0	0	0	0
321	Concrete Approach Slab	2	EA	3	2	0	0	0	0
331	Concrete Bridge Railing	486	LF	3	486	0	0	0	0
359	Soffit	1	EA	3	0	1	0	0	0

13 ACP cracked at abutments and approach slabs - approximately 2" ACP - worn in wheel lines

115 Stringer 2D has a 2 foot long spall with an exposed rebar strand in the bottom flange - spalled beam stops at abutments - spalled diaphrams at pier 3 - PCB's at SW and NW corners of the bridge are buried - vertical cracks at the BCB web/end diaphram interface

359 Transverse leaching cracks in the overhangs and soffit

533 ACP ramp at the North approach slab allows impact onto approach slab and bridge

538 Continue the repair to clean and epoxy coat exposed prestressing strand and patch spall on bottom flange of stringer 2D

Contract Plans

For Construction of:

SR 405 VICINITY MP 18.82

NE 100TH STREET BRIDGE

KING COUNTY

F. A. PROJECT NO. STPE-0625(001) & LOCAL PROJECT

Washington State Department of Transportation

City of Kirkland

CITY OF KIRKLAND

JOB NO. 6-00-P/W
FA NO. STPE-0625(001)
N.E. 100TH STREET BRIDGE
VIC. 117TH PL. NE TO SLATER AVE. NE
JANUARY, 2001

CITY OFFICIALS

LARRY SPRINGER	MAYOR
SANTS CONTRERAS	MAYOR PRO TEM
DAVE ASHER	COUNCIL MEMBER
TOM DILLON	COUNCIL MEMBER
NONA GANZ	COUNCIL MEMBER
JOAN MCBRIDE	COUNCIL MEMBER
JOYCE BUCHANAN	COUNCIL MEMBER
DAVE RAMSAY	CITY MANAGER
JIM ARNDT, P.E.	PUBLIC WORKS DIRECTOR
RAY STEIGER, P.E.	CAPITAL PROJECTS MANAGER

CONTACT PERSONNEL

NAME	AGENCY	PHONE
IZZAT HASAYEN	CONSULTANT	(206) 622-5822
MATT PREEDY	WSDOT FIELD ENGINEER	(425) 649-4436
STEVE GIBBS	COK PUBLIC WORKS	(425) 803-2821
	COK PW UTILITIES	828-1151/2
	COK POLICE	828-1183
	COK FIRE	828-1143
DON ERICKSON	COK WATER	828-1196
GREG KREMER	COK STORM/SEWER	828-1156/57
CRAIG ORTLOFF	GTE/VERIZON	425-823-4003
REBECCA NICHOLAS	PUGET SOUND ENERGY (ELEC)	206-224-2425
KATHY NOONAN	ATT (TCI) CABLE	425-497-5133
DON GOODMAN	PUGET SOUND ENERGY (GAS)	206-604-5440
	PSE (EMERGENCY)	1-888-CALL-PSE
	EMERGENCY	911

INDEX OF DRAWINGS

CIVIL

SHEET NO.	DESCRIPTION
C0.0	COVER SHEET
SQ1 - SQ3	SUMMARY OF QUANTITIES
C1	ABBREVIATIONS, LEGEND AND NOTES
C2	ROADWAY SECTIONS
C3	DEMOLITION PLAN
C4	TEMPORARY EROSION AND SEDIMENTATION CONTROL PLAN
C5	TEMPORARY EROSION AND SEDIMENTATION CONTROL DETAILS
C5.1	TEMPORARY EROSION AND SEDIMENTATION CONTROL DETAILS
C6	PAVING PLAN AND PROFILE STA. 30+00 TO 34+00
C7	PAVING PLAN AND PROFILE STA. 34+00 TO 37+00
C8	MISCELLANEOUS AND SIGNING DETAILS
C9	GRADING PLAN STA. 34+00 TO 37+00
C10	MISCELLANEOUS DETAILS
C11	DRAINAGE PLAN AND PROFILE STA. 30+00 TO 32+50
C12	DRAINAGE PLAN AND PROFILE STA. 34+50 TO 37+00
C13	DRAINAGE DETAILS
C14	TRAFFIC CONTROL PLAN
C15	TRAFFIC CONTROL INSTALLATION PLAN
C16	TRAFFIC CONTROL INSTALLATION PLAN

STRUCTURAL

SHEET NO.	DESCRIPTION
S1	Layout
S2	General Notes and Data
S3	Foundation Layout - Plan
S4	Pier 1 Abutment Sections and Details
S5	Pier 1 Curtain Walls
S6	Bridge Pier Details
S7	Pier 2 Foundation Plan
S8	Pier 2 Elevation and Sections
S9	Pier 2 Crossbeam & Center Diaphragm
S10	Pier 3 Abutment Sections and Details
S11	Pier 3 Curtain Walls
S12	Construction Sequence
S13	Bridge Superstructure Framing Plan
S14	Typical Bridge Section
S15	Bearing Details
S16	W42G Details I
S17	W42G Details II
S18	P.C. Girder Diaphragm Details
S19	Bridge Roadway Slab Reinf
S20	Slab Reinforcement Sections
S21	Bridge Utility Details
S22	SE Wall Elevations I
S23	SE Wall Elevations II
S24	SE Wall Elevations III
S25	SE Wall Sections and Details
S26	Pier 3 Approach Layout
S27	Pier 3 Approach Median Curb Details
S28	East Stair Plan and Elevation
S29	East Stair Reinforcing Plan and Sections
S30	East ADA Ramp Plan and Elevation
S31	East ADA Ramp Foundation Layout
S32	ADA Ramp Sections and Details I
S33	ADA Ramp Sections and Details II

STRUCTURAL CON'T

SHEET NO.	DESCRIPTION
S34	ADA Ramp Sections & Details III
S35	Pile Wall Elevations and Details
S36	Pile Wall Details II
S37	Noise Barrier Reconstruction Plan and Details
S38	Noise Barrier Reconstruction Details
S39	Bridge Barrier Details I
S40	Bridge Barrier Details II
S41	Bridge Screening, Railing and Gate Plan
S42	Bridge Screening Elevation
S43	Chain Link Railing Type 7L Details I
S44	Chain Link Railing Type 7L Details II
S45	Chain Link Railing Type 7L Details III
S46	ADA Ramp Railing Plan
S47	ADA Ramp Railing Details I
S48	ADA Ramp Railing Details II
S49	ADA Ramp Railing Details III
S50	East Approach Bridge Gate Details
S51	West Approach Bridge Gate Details
S52	Bollard Details and Gate Controller Attachment Details
S53	Median Barrier Reconstruction Details
S54	Luminaire Details
S55	Bar List I
S56	Bar List II
S57	Bar List III

ELECTRICAL

SHEET NO.	DESCRIPTION
E0	Legend and Abbreviations
E1	Power and Lighting
E2	Sections, Schedules, and Diagrams
E3	ADA Ramp and Stair Detail
E4	Details
E5	Details and Schedules

LANDSCAPING

SHEET NO.	DESCRIPTION
L1	Planting Plan, Schedule, Abbreviations & Notes
L2	Planting Details

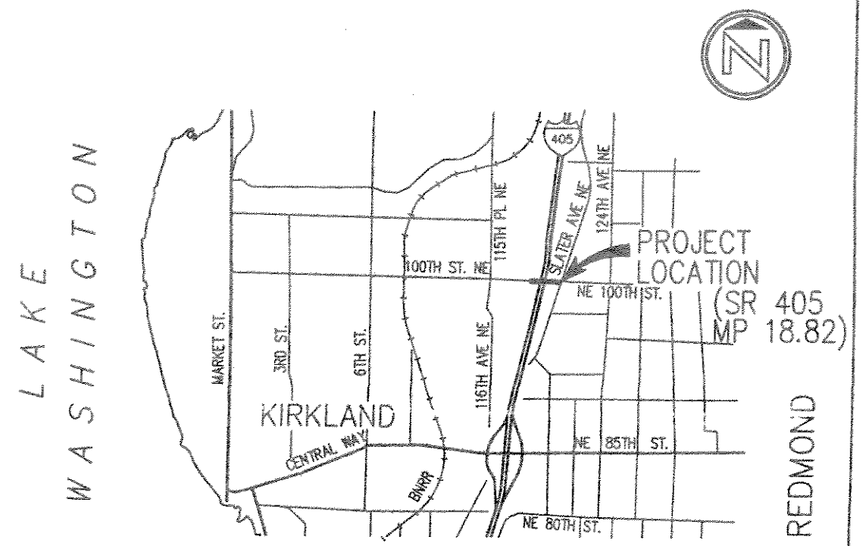

VICINITY MAP

NOT TO SCALE

SEC 33, T26N, R5E & SEC 4, T25N, R5E, WM

CALL 48 HOURS BEFORE YOU DIG 1-800-424-5555

kpff Consulting Engineers
1201 Third Avenue, Suite 900
Seattle, Washington 98101
(206) 622-5822 Fax (206) 622-8130

SUMMARY OF QUANTITIES

DOT_RGG900

7/25/2001

ITEM NO	TOTAL QUANTITY	SUB-TOTAL * SECTION 1-07 2(1) OF STANDARD SPECS	SUB-TOTAL ** SECTION 1-07 2(2) OF STANDARD SPECS	STD ITEM NO	UNIT	ITEM	GROUP 1 WSDOT R/W	GROUP 2 CITY OF KIRKLAND R/W	GROUP 3 THIRD PARTY DAMAGES
						PREPARATION			
1	LUMP SUM	LUMP SUM	LUMP SUM	0001	L.S.	MOBILIZATION	L.S.	L.S.	
2	LUMP SUM	LUMP SUM	LUMP SUM	0035	L.S.	CLEARING AND GRUBBING	L.S.	L.S.	
3	LUMP SUM	LUMP SUM	LUMP SUM	0050	L.S.	REMOVAL OF STRUCTURE AND OBSTRUCTION	L.S.	L.S.	
4	LUMP SUM		LUMP SUM	0060	L.S.	REMOVING PORTION OF EXISTING STRUCTURE	L.S.		
5	LUMP SUM		LUMP SUM		L.S.	REMOVING EXISTING CANTILEVER SIGN STRUCTURE FOUNDATION	L.S.		
6	15520.00		15520.00	0188	L.F.	REMOVING TEMPORARY PAVEMENT MARKING	15,520.00		
7	6208.00		6208.00	0187	L.F.	REMOVING PAINT LINE	6,208.00		
8	12.30		12.30	0208	HUND	REMOVING RAISED PAVEMENT MARKER	12.30		
						GRADING			
9	1488.00	967.00	521.00	0310	C.Y.	ROADWAY EXCAVATION INCL. HAUL	521.00	967.00	
10	600.00		600.00	0332	S.Y.	PAVEMENT REPAIR EXCAVATION INCL. HAUL	600.00		
11	742.00	482.00	260.00	0431	TON	GRAVEL BORROW INCL. HAUL	260.00	482.00	
						DRAINAGE			
12	490.00	490.00		1160	L.F.	UNDERDRAIN PIPE 6 IN. DIAM.		490.00	
13	75.00	75.00		1170	L.F.	DRAIN PIPE 6 IN. DIAM.		75.00	
						STORM SEWER			
14	2.00	2.00		3091	EACH	CATCH BASIN TYPE 1		2.00	
15	5.00	5.00		3106	EACH	CATCH BASIN TYPE 2 54 IN. DIAM.		5.00	
16	3.00	3.00		9605	EACH	CONNECTION TO DRAINAGE STRUCTURE		3.00	
17	137.00	137.00		3392	L.F.	PLAIN CONC. STORM SEWER PIPE 8 IN. DIAM.		137.00	
18	76.00	76.00		3455	L.F.	CL. IV REINF. CONC. STORM SEWER PIPE 12 IN. DIAM.		76.00	
19	35.00	35.00		3457	L.F.	CL. IV REINF. CONC. STORM SEWER PIPE 18 IN. DIAM.		35.00	
20	12.00	12.00		1365	L.F.	TR. 1 ST. CULV. PIPE 0.064 IN. TH. 30 IN. DIAM.		12.00	
21	90.00	90.00		1368	L.F.	TR. 1 ST. CULV. PIPE 0.064 IN. TH. 48 IN. DIAM.		90.00	
22	4.00	4.00			EACH	ADJUST MANHOLE TO GRADE		4.00	
23	3.00	3.00			EACH	FLOW RESTRICTOR/OIL SEPARATOR 18 IN. DIAM.		3.00	
24	2.00	2.00			EACH	DUCTILE IRON VERTICAL DROP CONNECTION 12 IN. DIAM.		2.00	
25	2670.00	2670.00			S.F.	SHORING OR EXTRA EXCAVATION CLASS B INCL. HAUL		2,670.00	
26	275.00	275.00			C.Y.	IMPORTED PIPE TRENCH BACKFILL		275.00	
27	145.00	145.00			L.F.	TRENCH DRAIN		145.00	
						STRUCTURE			
28	1023.00	20.00	1003.00	4006	C.Y.	STRUCTURE EXCAVATION CLASS A INCL. HAUL	1,003.00	20.00	
29	3075.00	3075.00			DOL	REMOVING OBSTRUCTIONS		3,075.00	
30	LUMP SUM		LUMP SUM	4013	L.S.	SHORING OR EXTRA EXCAVATION CL. A	L.S.		
31	182.00		182.00	4144	LB.	EPOXY-COATED ST. REIN. BAR FOR BRIDGE SUBSTRUCTURE	182.00		
32	2395.00	2395.00		4144	LB.	EPOXY-COATED ST. REIN. BAR FOR ADA RAMP		2,395.00	
33	247.00	247.00		4144	LB.	EPOXY-COATED ST. REIN. BAR FOR STAIRS ON GRADE		247.00	
34	66379.00		66379.00	4151	LB.	ST. REINF. BAR FOR BRIDGE SUBSTRUCTURE	66,379.00		
35	44718.00	44718.00		4151	LB.	ST. REINF. BAR FOR ADA RAMP		44,718.00	
36	914.00	914.00		4151	LB.	ST. REINF. BAR FOR STAIRS ON GRADE		914.00	
37	200.00		200.00	4202	C.Y.	CONC. CLASS 4000 FOR BRIDGE SUBSTRUCTURE	200.00		
38	304.00	304.00		4202	C.Y.	CONC. CLASS 4000 FOR ADA RAMP		304.00	
39	19.00	19.00		4202	C.Y.	CONC. CLASS 4000 FOR STAIRS ON GRADE		19.00	
40	LUMP SUM		LUMP SUM	4300	L.S.	SUPERSTRUCTURE NE 100TH STREET BRIDGE	L.S.		
41	400.00		400.00	4415	L.F.	TRAFFIC BARRIER	400.00		
42	915.00	686.00	229.00		L.F.	TRAFFIC BARRIER WITH FOOTING	229.00	686.00	
43	88.00		88.00		L.F.	INTERSTATE MEDIAN BARRIER	88.00		
44	LUMP SUM		LUMP SUM		L.S.	NOISE BARRIER PANELS AND CLOSURES	L.S.		
45	8324.00	7075.00	1249.00	7169	S.F.	STRUCTURAL EARTH WALL	1,249.00	7,075.00	
46	1720.00	1462.00	258.00	7170	C.Y.	BACKFILL FOR STRUCTURAL EARTH WALL INCL. HAUL	258.00	1,462.00	
47	510.00		510.00		L.F.	BRIDGE SCREENING 6' - 0"	510.00		

GROUP LEGEND :

GROUP NUMBER	SR	CONTROL SECTION	TAX SCHEDULE	FUND PARTICIPANTS
1	405	174305		STPE-0625(001),CITY OF KIRKLAND
2	000	1700NT		STPE-0625(001),CITY OF KIRKLAND
3	405	174305		STATE

DATE	REVISION	BY

REGION	STATE	FEDERAL AID PROJECT. NO.
10	WA	STPE-0625(001)

JOB NUMBER 00A066/3

CONTRACT NO 000000

Washington State Department of Transportation

SR 405
NE 100TH STREET BRIDGE

SUMMARY OF QUANTITIES

SQ1 SHEET OF SHEETS

SUMMARY OF QUANTITIES

DOT_RGG900

7/25/2001

ITEM NO	TOTAL QUANTITY	SUB-TOTAL * SECTION 1-07.2(1) OF STANDARD SPECS	SUB-TOTAL ** SECTION 1-07.2(2) OF STANDARD SPECS	STD. ITEM NO	UNIT	ITEM	GROUP 1 WSDOT R/W	GROUP 2 CITY OF KIRKLAND R/W	GROUP 3 THIRD PARTY DAMAGES
48	396.00		396.00		L.F.	BRIDGE SCREENING 1' - 10"	396.00		
49	355.00	355.00			L.F.	ADA WALL- MOUNTED HANDRAIL		355.00	
50	453.00	453.00			L.F.	ADA RAMP HANDRAIL		453.00	
51	213.00	213.00			L.F.	ADA RAMP GUARDRAIL		213.00	
52	504.00	504.00			S.F.	SOLDIER PILE WALL WITH CONCRETE FASCIA		504.00	
53	LUMP SUM		LUMP SUM		L.S.	SUSPENDED BRIDGE UTILITY BRACING	L.S.		
54	LUMP SUM	LUMP SUM			L.S.	COORDINATION WITH PSE UTILITY CONTRACTOR		L.S.	
						SURFACING			
55	370.00		370.00	5100	TON	CRUSHED SURFACING BASE COURSE	370.00		
56	540.00	330.00	210.00	5120	TON	CRUSHED SURFACING TOP COURSE	210.00	330.00	
						ASPHALT CONCRETE PAVEMENT			
57	485.00	250.00	235.00	5752	TON	ASPHALT CONC. PAVEMENT CL. B PG 58-22	235.00	250.00	
						EROSION CONTROL AND PLANTING			
58	5125.00	5125.00		6489	DOL	TEMPORARY WATER POLLUTION/EROSION CONTROL		5,125.00	
59	0.25	0.25		6414	ACRE	SEEDING, FERTILIZING, AND MULCHING		0.25	
60	850.00	850.00			L.F.	SILT FENCE		850.00	
61	120.00	80.00	40.00		L.F.	GEOTEXTILE-ENCASED CHECK DAM	40.00	80.00	
62	6.00	6.00			EACH	CATCH BASIN PROTECTION INSERT		6.00	
63	24.00	24.00			C.Y.	BARK MULCH		24.00	
64	67.00	67.00		6405	C.Y.	TOPSOIL TYPE A		67.00	
65	1475.00	1475.00			S.F.	WILDFLOWER SEED MIX INCLUDING PLANT ESTABLISHMENT		1,475.00	
66	7.00	7.00		6552	EACH	PSIPE HOGAN CEDAR (6' - 8' HT.)		7.00	
67	9.00	9.00		6552	EACH	PSIPE DAWYCK PURPLE BEECH (2" CAL.)		9.00	
68	11.00	11.00		6552	EACH	PSIPE FESTIVAL SWEET GUM (2" CAL.)		11.00	
69	2.00	2.00		6552	EACH	PSIPE SASKATOON SERVICEBERRY (6' - 8' HT.)		2.00	
70	13.00	13.00		6552	EACH	PSIPE GRACILIS HINOKI FALSE CYPRESS (6' - 8' HT.)		13.00	
71	83.00	83.00		6552	EACH	PSIPE GREEN SHOWERS BOSTON IVY (1 GAL.)		83.00	
72	159.00	159.00			L.F.	ROOT BARRIER		159.00	
73	LUMP SUM	LUMP SUM			L.S.	PLANT ESTABLISHMENT (1 YEAR)		L.S.	
						TRAFFIC			
74	80.00	80.00			L.F.	CEMENT CONCRETE CURB AND GUTTER		80.00	
75	160.00	160.00			L.F.	CEMENT CONCRETE CURB, TYPE E-2		160.00	
76	310.00	310.00			S.Y.	CEMENT CONCRETE SIDEWALK		310.00	
77	130.00	130.00			S.Y.	CEMENT CONCRETE DRIVEWAY		130.00	
78	700.00		700.00	6781	L.F.	TEMPORARY CONC. BARRIER	700.00		
79	2.00		2.00	7447	EACH	TRUCK MOUNTED IMPACT ATTENUATOR	2.00		
80	300.00		300.00	7449	HOUR	OPERATION OF TRUCK MOUNTED IMPACT ATTENUATOR	300.00		
81	4100.00		4100.00	7444	DOL	REPAIR IMPACT ATTENUATOR	4,100.00		
82	6628.00		6628.00	6806	L.F.	PAINT LINE	6,628.00		
83	6.00		6.00		EACH	PLASTIC PREFERENTIAL LANE SYMBOL TYPE 1	6.00		
84	3.00	3.00			EACH	BICYCLE SYMBOL		3.00	
85	9.20		9.20	6882	HUND	RAISED PAVEMENT MARKER TYPE 1	9.20		
86	3.10		3.10	6884	HUND	RAISED PAVEMENT MARKER TYPE 2	3.10		
87	15520.00		15520.00	6886	L.F.	TEMPORARY PAVEMENT MARKING	15,520.00		
88	LUMP SUM	LUMP SUM		6890	L.S.	PERMANENT SIGNING		L.S.	
89	500.00		500.00	6956	HOUR	SEQUENTIAL ARROW SIGN	500.00		
90	2.00		2.00	6994	EACH	PORTABLE CHANGEABLE MESSAGE SIGN	2.00		
91	500.00		500.00	6995	HOUR	OPERATION OF PORTABLE CHANGEABLE MESSAGE SIGN	500.00		
92	4.00	4.00		6958	EACH	TYPE III BARRICADE		4.00	
93	LUMP SUM		LUMP SUM	6964	L.S.	TEMPORARY TRAFFIC CONTROL DEVICES	L.S.		
94	250.00		250.00	6972	HOUR	TRAFFIC CONTROL SUPERVISOR	250.00		
95	90.00		90.00	6968	DAY	TRAFFIC CONTROL VEHICLE	90.00		

GROUP LEGEND :

GROUP NUMBER	SR	CONTROL SECTION	TAX SCHEDULE	FUND PARTICIPANTS
1	405	174305		STPE-0625(001),CITY OF KIRKLAND
2	000	1700NT		STPE-0625(001),CITY OF KIRKLAND
3	405	174305		STATE

DATE	REVISION	BY

REGION	STATE	FEDERAL AID PROJECT. NO.
10	WA	STPE-0625(001)

JOB NUMBER 00A066/3

CONTRACT NO 000000

Washington State Department of Transportation

SR 405
NE 100TH STREET BRIDGE

SUMMARY OF QUANTITIES

SQ2

SHEET OF SHEETS

SUMMARY OF QUANTITIES

DOT_RGG900

7/25/2001

ITEM NO	TOTAL QUANTITY	SUB-TOTAL * SECTION 1-07 2(1) OF STANDARD SPECS	SUB-TOTAL ** SECTION 1-07 2(2) OF STANDARD SPECS	STD ITEM NO	UNIT	ITEM	GROUP 1 WSDOT R/W	GROUP 2 CITY OF KIRKLAND R/W	GROUP 3 THIRD PARTY DAMAGES
96	900.00		900.00	6979	HOUR	TRAFFIC CONTROL LABOR	900.00		
97	508.00	280.00	228.00	6982	S.F.	CONSTRUCTION SIGNS CLASS A	228.00	280.00	
98	LUMP SUM	LUMP SUM	LUMP SUM		L.S.	ELECTRICAL SERVICE	L.S.	L.S.	
99	LUMP SUM	LUMP SUM	LUMP SUM		L.S.	LIGHTING SYSTEM COMPLETE	L.S.	L.S.	
100	LUMP SUM		LUMP SUM		L.S.	AUTOMATIC SWING GATE COMPLETE	L.S.		
						OTHER ITEMS			
101	1.00		1.00	6243	EACH	ADJUST VALVE BOX	1.00		
102	LUMP SUM		LUMP SUM	7735	L.S.	SPILL PREVENTION PLAN	L.S.		
103	140.00		140.00		S.Y.	ROCK WALL	140.00		
104	25.00		25.00	7083	L.F.	CHAIN LINK FENCE TYPE 3	25.00		
105	115.00		115.00		L.F.	BOARD FENCE	115.00		
106	4.00		4.00	7041	EACH	BOLLARD TYPE - REMOVABLE	4.00		
107	800.00		800.00	7400	HOUR	TRAINING	800.00		
108	2562.00	1281.00	1281.00	7480	DOL	ROADSIDE CLEANUP	1,281.00	1,281.00	
109	LUMP SUM		LUMP SUM	7037	L.S.	STRUCTURE SURVEYING	L.S.		
110	LUMP SUM	LUMP SUM		7038	L.S.	ROADWAY SURVEYING		L.S.	
111	5.00		5.00	7725	DOL	REIMBURSEMENT FOR THIRD PARTY DAMAGE			5.00
112	-1.00		-1.00	7728	DOL	MINOR CHANGE	-1.00		

GROUP LEGEND :

GROUP NUMBER	SR	CONTROL SECTION	TAX SCHEDULE	FUND PARTICIPANTS
1	405	174305		STPE-0625(001),CITY OF KIRKLAND
2	000	1700NT		STPE-0625(001),CITY OF KIRKLAND
3	405	174305		STATE

DATE	REVISION	BY

REGION	STATE	FEDERAL AID PROJECT. NO.
10	WA	STPE-0625(001)

JOB NUMBER 00A066/3

CONTRACT NO 000000

Washington State Department of Transportation

SR 405
NE 100TH STREET BRIDGE

SUMMARY OF QUANTITIES

SQ3

SHEET OF SHEETS

GENERAL NOTES:

1. THE HORIZONTAL DATUM FOR THIS PROJECT WAS THE WASHINGTON STATE PLANE GRID SYSTEM, NORTH ZONE, NAD 83/91.
2. THE BASIS OF THE HORIZONTAL COORDINATES WAS ESTABLISHED FROM THE WASHINGTON HIGH PRECISION GEODETIC NETWORK STATION "OVERLAKE" USING G.P.S. SURVEY TECHNIQUES.
3. THE VERTICAL DATUM FOR THIS PROJECT WAS N.G.V.D. 1929 AS DETERMINED FROM THE CITY OF REDMOND NO.46, PUBLISHED ELEVATION 330.67'.
4. THIS SURVEY REFLECTS THE EXISTING CONDITIONS AS OF JUNE 11, 1998.
5. SR405 RIGHT OF WAY IS BASED ON THE WSDOT RIGHT OF WAY PLANS PSH 1 (SR405) NORTHRUP INTERCHANGE TO N.E. 140th St. SHEETS 8 AND 9 OF 13. DATED APRIL 12, 1967.
6. RECORD INFORMATION SHOWN FOR THE STORM DRAINAGE DETENTION AREA LOCATED AT 117th Pl. N.E. AND N.E. 100th St. IS BASED ON THE AS-BUILT PLANS OF EDWARD PLACE SHEET 4 OF 4 BY HUGH GOLDSMITH AND ASSOCIATES. THE DATUM AND BENCHMARK USED FOR THE AS-BUILT SURVEY WAS NOT VERIFIED PER THIS SURVEY.
7. BH-1, BH-2, BH-3 AND BH-6 APPROXIMATE LOCATION SUPPLIED BY KPFF.

SURVEY NOTES:

1. TOPOGRAPHIC SURVEY INFORMATION SHOWN ON THESE PLANS WAS PROVIDED BY ANN SYMONDS & ASSOCIATES
2. R/W INFORMATION PROVIDED BY THE CITY OF KIRKLAND.
3. THE HORIZONTAL BASIS OF BEARING IS NAD83('91). THE VERTICAL DATUM IS NGVD 29

DATUM

MERIDIAN
NAD83('91)
NGVD '29

COORDINATES FOR CONSTRUCTION CENTERLINE			
STATION		NORTHING	EASTING
POB	30+00.00	254,439.1258	1,308,011.5506
AP	30+81.16	254,436.8898	1,308,092.6770
INTX I-405	33+41.70	254,444.3466	1,308,353.1145
AP	34+76.65	254,448.2100	1,308,488.0100
POE	38+00.00	254,439.2800	1,308,811.2350

CURVE DATA I-405					
P.I. STATION	Δ	RADIUS	TANGENT	LENGTH	BK. TANGENT BRG.
606+83.84	06°41'42"	22918.31'	1340.53'	2678.00'	N 13°38'25" E

ABBREVIATIONS

ACP	ASPHALT CONCRETE PAVEMENT
ADA	AMERICAN DISABILITIES ACT
ALT	ALTERNATE
AP	ANGLE POINT
BC	BOTTOM OF CURB
BM	BENCHMARK
BOT	BOTTOM
BPS	BACK OF PAVEMENT SEAT
BVCE	BEGIN VERTICAL CURVE ELEVATION
BVCS	BEGIN VERTICAL CURVE STATION
CB	CATCH BASIN
℄, CL	CENTERLINE, CLASS
CMP	CORRUGATED METAL PIPE
COK	CITY OF KIRKLAND
COMP	COMPRESSIVE
CONC	CONCRETE
CONST	CONSTRUCTION
CSBC	CRUSHED SURFACING BASE COURSE
DIAM., ø	DIAMETER
DTL, DET	DETAIL
E	EAST, EASTING
EA	EACH
ELEV	ELEVATION
EP	EDGE OF PAVEMENT
EVCE	END VERTICAL CURVE ELEVATION
EVCS	END VERTICAL CURVE STATION
EW	EACH WAY
EX, EXIST	EXISTING
FC	FACE OF CURB
FF	FINISHED FLOOR
G	GAS
HORIZ.	HORIZONTAL
IE	INVERT ELEVATION
ILL.	ILLUMINATION
IRR.	IRRIGATION
L	LENGTH, LINE
LA	LANDSCAPE ARCHITECT
LF	LINEAR FEET
LT	LEFT
MAX.	MAXIMUM
MH	MANHOLE
MIN.	MINIMUM
MOD.	MODIFIED
N	NORTH, NORTHING
NB	NORTH BOUND
NO.	NUMBER
NTS	NOT TO SCALE
O.C.	ON CENTER
P	POWER
PCC	PORTLAND CEMENT CONCRETE
POC	POINT OF CONNECTION, POINT ON CURVE
PT	POINT OF TANGENCY
PVC	POLYVINYL CHLORIDE
PVC	POINT OF VERTICAL CURVATURE
PVCC	POINT OF VERTICAL CONTINUOUS CURVATURE
PVI	POINT OF VERTICAL INTERSECTION
PVMT	PAVEMENT
PVT	POINT OF VERTICAL TANGENCY
R	RADIUS
RT	RIGHT
R/W, ROW	RIGHT OF WAY
S	SOUTH, SLOPE
SB	SOUTH BOUND
SD	STORM DRAIN
SE	STRUCTURAL EARTH
SS	SANITARY SEWER
ST	STEEL
STA.	STATION
STD	STANDARD
S/W	SIDEWALK
T	TELEPHONE
TC, TOC	TOP OF CURB
TE	TOP ELEVATION
T.E.S.C.	TEMPORARY EROSION AND SEDIMENT CONTROL
TYP.	TYPICAL
UD	UNDERDRAIN
VB	VERTICAL BEND
VC	VERTICAL CURVE
VERT.	VERTICAL
W	WATER, WEST
W/	WITH
@	AT
WSDOT	WASHINGTON STATE DEPARTMENT OF TRANSPORTATION

LEGEND

EXISTING

- WATER METER
- FIRE HYDRANT
- WATER VALVE
- SIGN
- CATCH BASIN
- STREET LIGHT
- TREE (DECIDUOUS)
- TREE (CONIFER)
- SOIL BORING HOLE
- SEWER MANHOLE
- STORM MANHOLE
- POWER POLE
- GUY ANCHOR
- GAS VALVE
- POWER VAULT
- MAILBOX
- REBAR & CAP
- MON & CASE
- SSCO (SANITARY SEWER CLEANOUT)
- PUBLIC LAND SURVEY CORNER

PROPOSED

- WATER METER
- DROP CONNECTION
- 252.1 SPOT ELEVATION
- STORM DRAIN CATCH BASIN W/ FRAME & GRATE
- ROCKERY
- STORM DRAIN MANHOLE W/ RING & COVER
- MON & CASE
- CLEANOUT

kpff Consulting Engineers
1201 Third Avenue, Suite 900
Seattle, Washington 98101
(206) 622-5822 Fax (206) 622-8130

CALL 48 HOURS BEFORE YOU DIG 1-800-424-5555

FILE	ENGR.	REVIEW	SCALE	DATE
	MSG	RJL	SHOWN	10-00

NO.	REVISION	BY	REVIEW	DATE

CITY OF KIRKLAND WASHINGTON

CITY OF KIRKLAND
PUBLIC WORKS DEPARTMENT
123 FIFTH AVENUE – KIRKLAND, WA 98033-6189 – (425) 828-1243

N.E. 100TH STREET BRIDGE
ABBREVIATIONS, LEGENDS AND NOTES

SHEET C1

XREFS: LEIMKUHL, JOHNSON, 100X18,

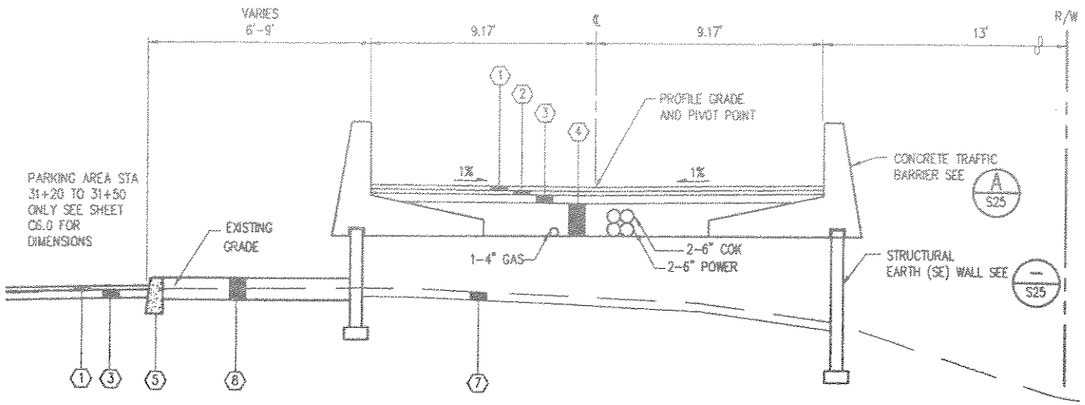

ROADWAY SECTION A
STA. 30+26.61 TO STA. 32+41.70
NTS

GENERAL NOTES

1. UTILITY CONDUITS AND TA25 UTILITY VAULT INSTALLATION BY PSE. SEE SPECIAL PROVISION.

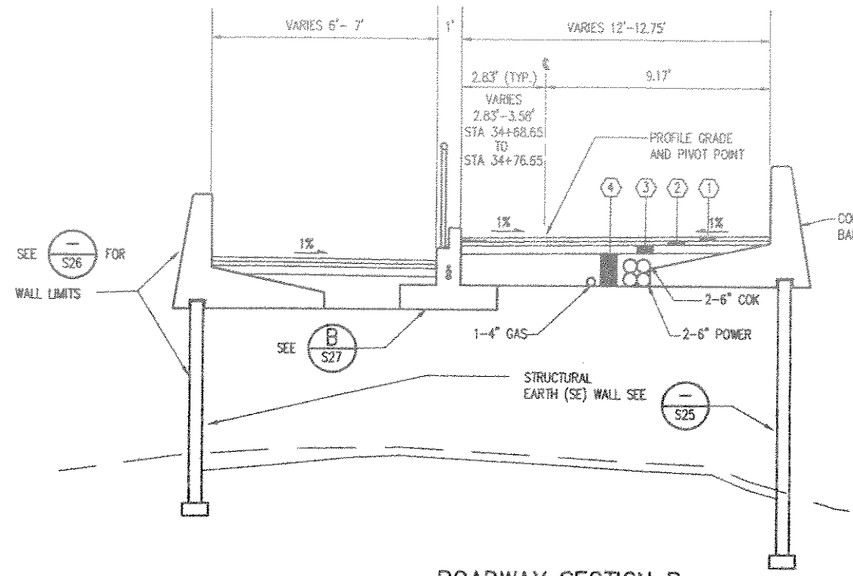

ROADWAY SECTION B
STA. 34+41.70 TO STA. 34+76.65
NTS

SURFACING LEGEND

1. 0.16' COMPACTED DEPTH ACP CL B WEARING COURSE.
2. 0.16' COMPACTED DEPTH ACP CL B LEVELING COURSE.
3. 0.32' CRUSHED SURFACING TOP COURSE.
4. GRAVEL BORROW.
5. CEMENT CONC. VERTICAL CURB TYPE E-2 PER COK STANDARD DRAWING CK-R.18.
6. 4" CEMENT CONCRETE SIDEWALK SEE SHEET S34
7. 0.5' STRIPPING MIN. SEE TECHNICAL PROVISIONS SECT 2-03
8. 0.5 ~ 1.0' TOPSOIL TYPE A. SEE LANDSCAPE PLAN.
9. 0.5' COMPACTED DEPTH ACP CL B. MAX LIFT THICKNESS 0.25' PER STD SPEC 5-04.3(9)
10. 0.5' CRUSHED SURFACING TOP COURSE.
11. 1.0' CRUSHED SURFACING BASE COURSE.
12. CEMENT CONC. CURB AND GUTTER, TYPE A PER STD CK-R.17.
13. CEMENT CONC. DRIVEWAY, ALT 2 PER STD CK-R.21.

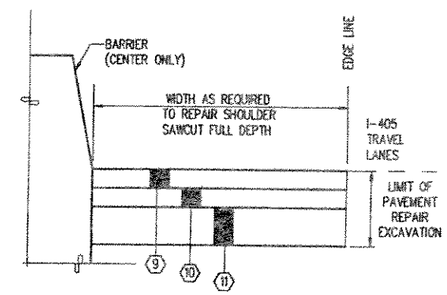

INTERSTATE SHOULDER REPAIR
NTS

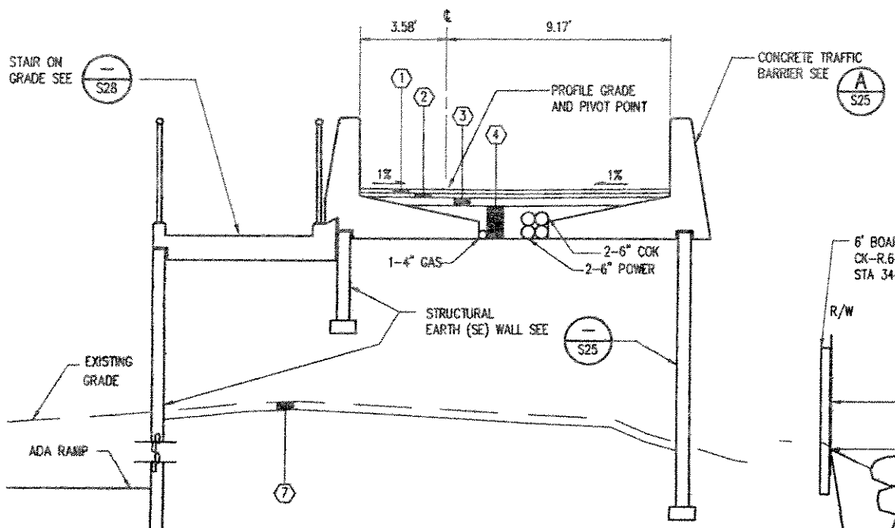

ROADWAY SECTION C
STA. 34+76.65 TO STA. 35+24.53
NTS

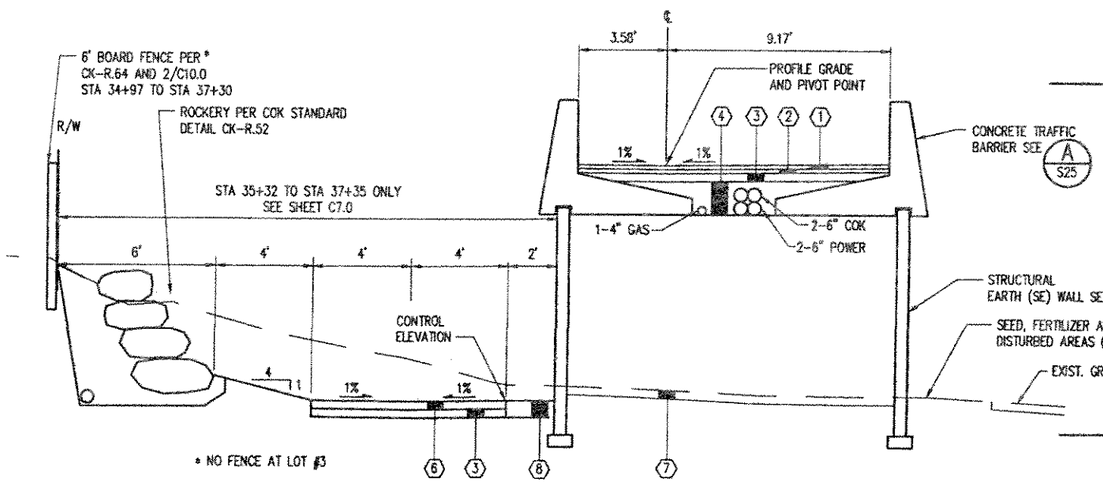

ROADWAY SECTION D
STA. 35+24.53TO STA. 37+35
NTS

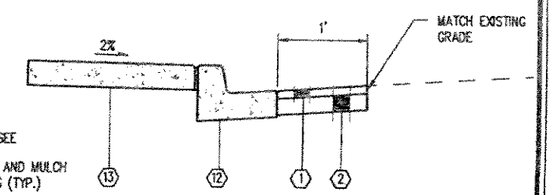

CURB RETURN DETAIL
NTS

kpff Consulting Engineers
1201 Third Avenue, Suite 900
Seattle, Washington 98101
(206) 622-5822 Fax (206) 622-8130

CALL 48 HOURS BEFORE YOU DIG 1-800-424-5555

RONALD J. LEIMKUHLER, STATE OF WASHINGTON, 24088, REGISTERED PROFESSIONAL ENGINEER, EXPIRES 06/01/01 — 6/12/01

FILE	ENGR.	REVIEW	SCALE	DATE
	MSG	RJL	SHOWN	10-00

NO.	REVISION	BY	REVIEW	DATE

CITY OF KIRKLAND WASHINGTON

CITY OF KIRKLAND
PUBLIC WORKS DEPARTMENT
123 FIFTH AVENUE – KIRKLAND, WA 98033-6189 – (425) 828-1243

N.E. 100TH STREET BRIDGE
ROADWAY SECTIONS

SHEET
C2

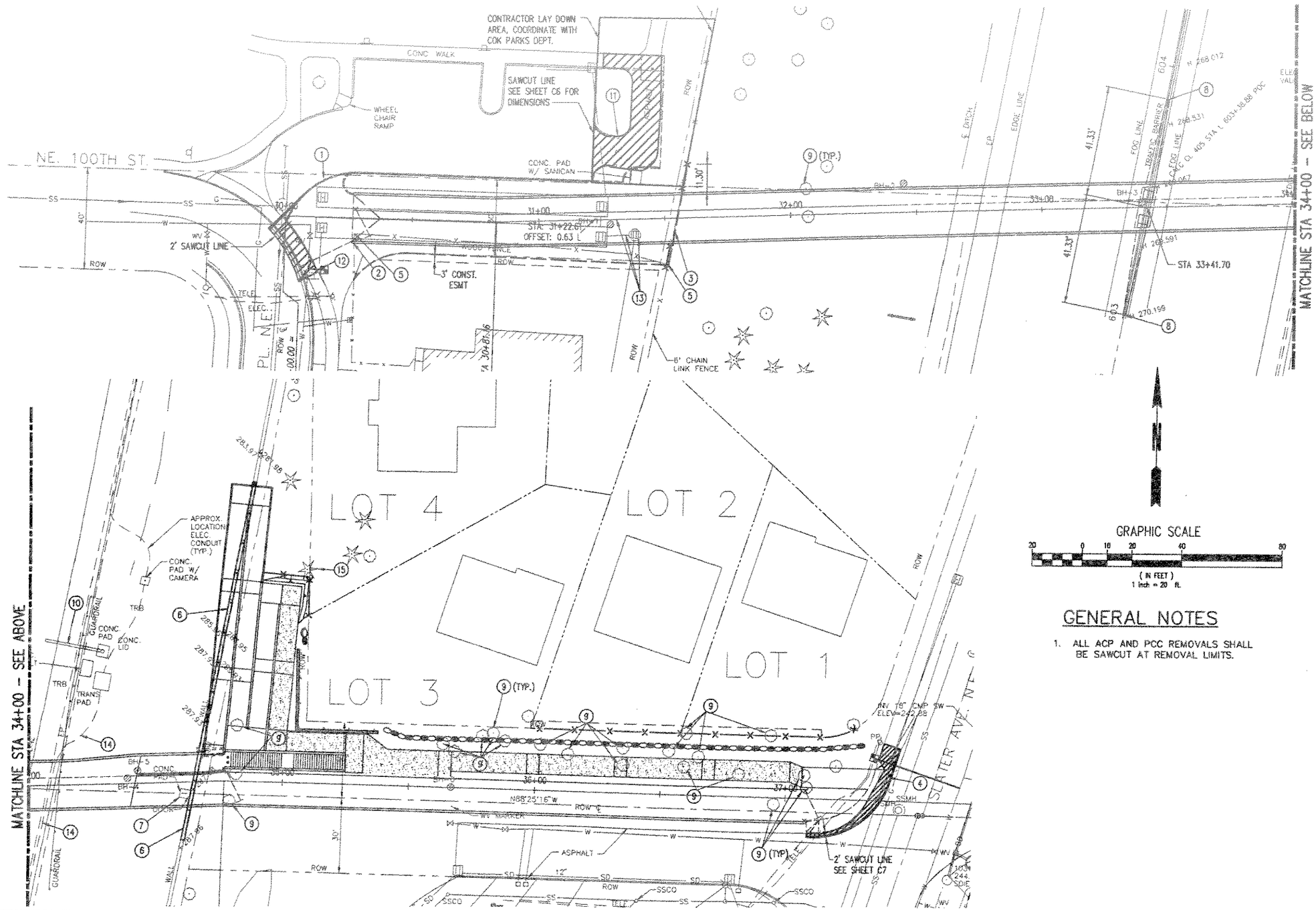

DEMOLITION LEGEND

1. REMOVE CURB
2. DISASSEMBLE 4' WIRE FENCE AND POSTS TO R/W LINE.
3. REMOVE 6' CHAIN LINK FENCE TO LIMITS SHOWN
4. PROTECT EXISTING CATCH BASIN TO REMAIN
5. REMOVE BOARD FENCE TO LIMITS SHOWN
6. REMOVE 12 PRECAST NOISE BARRIER PANELS. PROVIDE ADEQUATE SUPPORT AND BRACING FOR UNRESTRAINED PANEL SECTIONS TO REMAIN. ABANDON FOUNDATION SHAFTS TO DEPTH 2 FEET BELOW NEW FOOTINGS.
7. REMOVE CONCRETE PAD
8. REMOVE PORTION OF MEDIAN BARRIER STRUCTURE
9. REMOVE TREES
10. REMOVE MONOTOBE CANTILEVER SIGN BRIDGE, SHAFT, FOUNDATION TO 2' BELOW GRADE.
11. REMOVE BOLLARDS. SALVAGE TO CITY.
12. REMOVE SIGN FOR RELOCATION.
13. REMOVE DRAINAGE CONTROL STRUCTURE AND PIPES. FIELD VERIFY CONTROL STRUCTURE INVERT ELEVATIONS AND ORIFICE DIAMETER(S) PRIOR TO DEMOLITION AND SUPPLY TO CITY OF KIRKLAND PROJECT ENGINEER. SEE C13.0, CONTROL STRUCTURE TABLE, FOR MORE INFORMATION.
14. CONTACT WSDOT SC & DI FOR LOCATION. SEE SPECIAL PROVISIONS. PROTECT POWER TO SC & DI CONDUIT. ANY DAMAGE SHALL BE REPAIRED WITHIN 24 HOURS BY WSDOT APPROVED FIBER OPTIC CONTRACTOR.
15. PRUNE EXISTING TREES TO REMAIN SEE TECHNICAL PROVISIONS.

REMOVE ASPHALT CONCRETE PAVEMENT AND CEMENT CONCRETE SIDEWALK, CURB AND GUTTER.

GENERAL NOTES

1. ALL ACP AND PCC REMOVALS SHALL BE SAWCUT AT REMOVAL LIMITS.

kpff Consulting Engineers
1201 Third Avenue, Suite 900
Seattle, Washington 98101
(206) 622-5822 Fax (206) 622-8130

CALL 48 HOURS BEFORE YOU DIG 1-800-424-5555

FILE	ENGR.	REVIEW	SCALE	DATE
	MG	RL	SHOWN	10-00

NO.	REVISION	BY	REVIEW	DATE

CITY OF KIRKLAND WASHINGTON

CITY OF KIRKLAND
PUBLIC WORKS DEPARTMENT
123 FIFTH AVENUE - KIRKLAND, WA 98033-6189 - (425) 828-1243

N.E. 100TH STREET BRIDGE
DEMOLITION PLAN

SHEET
C3

SEE SHEET C5 FOR EROSION/ SEDIMENTATION CONTROL NOTES.

LEGEND

- (XX) BMP CODE
- (1) CONSTRUCTION NOTE
- SWALE
- EXISTING DITCH
- FILTER FABRIC FENCE
- 12" SD — STORM DRAIN
- (CE)

BMP LEGEND

- (FF) FILTER FABRIC FENCE (STD PLAN CK-E.03)
- (PS) PERMANENT SEEDING
- (GL) GRADING LIMITS
- (VEG) PRESERVE VEGETATION
- (ST) SEDIMENT TRAP
- (CE) CONSTRUCTION ENTRANCE TEMPORARY (STD PLAN CK-E.01)
- (DC) DUST CONTROL
- (CBP) CATCH BASIN PROTECTION PER DETAIL 1/C5.0
- (CD) GEOTEXTILE-ENCASED CHECK DAM PER C5.1
- (IS) INTERCEPTOR SWALE – SEE STD. PLANS

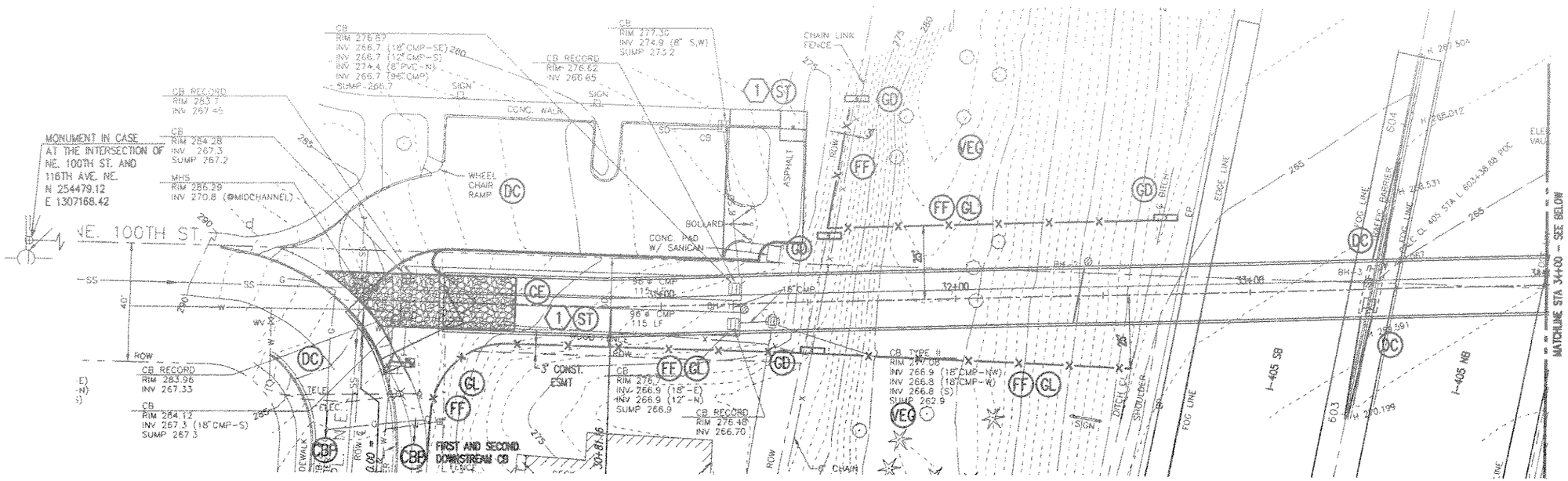

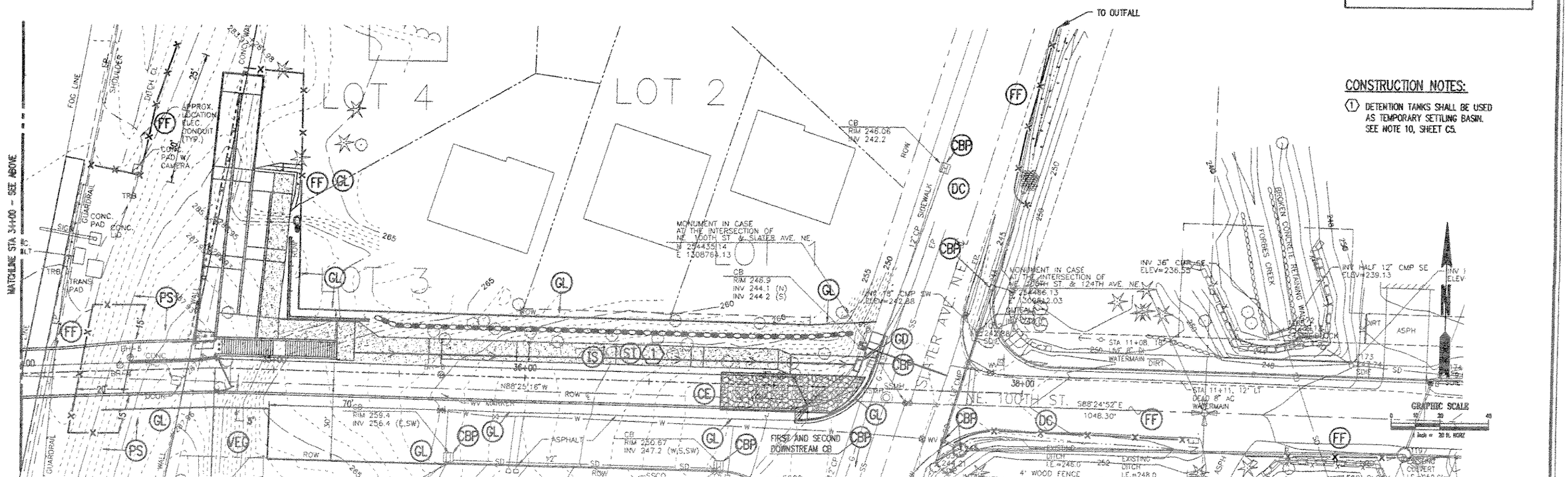

CONSTRUCTION NOTES:

1. DETENTION TANKS SHALL BE USED AS TEMPORARY SETTLING BASIN. SEE NOTE 10, SHEET C5.

kpff Consulting Engineers
1201 Third Avenue, Suite 900
Seattle, Washington 98101
(206) 622-5822 Fax (206) 622-8130

CALL 48 HOURS BEFORE YOU DIG 1-800-424-5555

FILE	ENGR.	REVIEW	SCALE	DATE
	MSG	RJL	SHOWN	10-00

NO.	REVISION	BY	REVIEW	DATE

CITY OF KIRKLAND WASHINGTON

CITY OF KIRKLAND
PUBLIC WORKS DEPARTMENT
123 FIFTH AVENUE – KIRKLAND, WA 98033-6189 – (425) 828-1243

N.E. 100TH STREET BRIDGE
TEMPORARY EROSION AND SEDIMENTATION CONTROL PLAN

SHEET C4

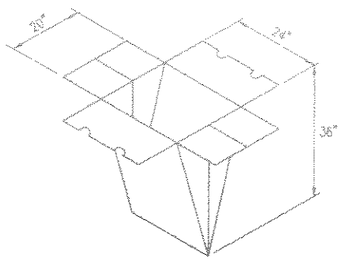

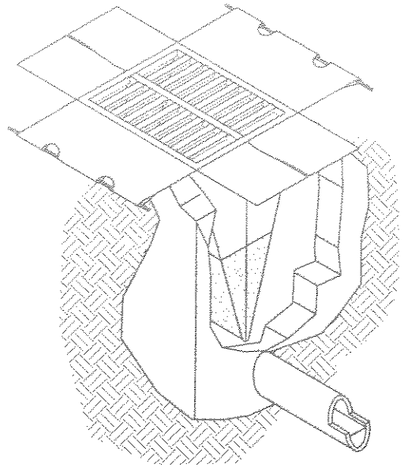

DIRECTIONS FOR USE:
- REMOVE DRAIN GRATE
- INSERT FILTER
- REPLACE GRATE TO HOLD IN POSITION

SPECIFICATIONS:
- FILTERS MIN. 3 FEET DEEP
- CONSTRUCTED OF WOVEN POLYPROPYLENE
- ALL SEAMS DOUBLE-STITCHED
- PERMEABILITY-40GAL. PER MINUTE PER SQUARE FOOT
- REUSEABLE OR THROW-AWAY

MAINTENANCE:
- REMOVE WHEN FILLED TO HALF-WAY MARK (USE FRONT-LOADER OR OTHER EQUIPMENT FOR REMOVAL)
- CLEAN AND RE-USE, OR REPLACE

CBP

CATCH BASIN (PROTECTION) INSERT

NTS

1
C4.0

CITY OF KIRKLAND EROSION / SEDIMENTATION CONTROL (ESC) NOTES:

1. THE APPROVED CONSTRUCTION SEQUENCE SHALL BE AS FOLLOWS:
   A. CONDUCT PRE-CONSTRUCTION MEETING.
   B. FLAG OR FENCE CLEARING LIMITS.
   C. POST SIGN WITH NAME AND PHONE NUMBER OF TESC SUPERVISOR.
   D. INSTALL CATCH BASIN PROTECTION IF REQUIRED.
   E. GRADE AND INSTALL CONSTRUCTION ENTRANCE(S).
   F. INSTALL PERIMETER PROTECTION (SILT FENCE, BRUSH BARRIER, ETC.).
   G. CONSTRUCT SEDIMENT PONDS AND TRAPS.
   H. GRADE AND STABILIZE CONSTRUCTION ROADS.
   I. CONSTRUCT SURFACE WATER CONTROLS (INTERCEPTOR DIKES, PIPE SLOPE DRAINS, ETC.) SIMULTANEOUSLY WITH CLEARING AND GRADING FOR PROJECT DEVELOPMENT
   J. MAINTAIN EROSION CONTROL MEASURE IN ACCORDANCE WITH CITY OF KIRKLAND STANDARDS AND MANUFACTURER'S RECOMMENDATIONS.
   K. RELOCATE EROSION CONTROL MEASURES OR INSTALL NEW MEASURES SO THAT AS SITE CONDITIONS CHANGE, THE EROSION AND SEDIMENT CONTROL IS ALWAYS IN ACCORDANCE WITH THE CITY TESC MINIMUM REQUIREMENTS.
   L. COVER ALL AREAS WITHIN THE SPECIFIED TIME FRAME WITH STRAW, WOOD FIBER MULCH, COMPOST, PLASTIC SHEETING, CRUSHED ROCK OR EQUIVALENT.
   M. STABILIZE ALL AREAS THAT REACH FINAL GRADE WITHIN 7 DAYS.
   N. SEED OR SOD ANY AREAS TO REMAIN UNWORKED FOR MORE THAN 30 DAYS.
   O. UPON COMPLETION OF THE PROJECT, ALL DISTURBED AREAS MUST BE STABILIZED AND BEST MANAGEMENT PRACTICES REMOVED IF APPROPRIATE.

1. APPROVAL OF THIS EROSION/SEDIMENTATION CONTROL (ESC) PLAN DOES NOT CONSTITUTE AN APPROVAL OF PERMANENT ROAD OR DRAINAGE DESIGN (E.G., SIZE AND LOCATION OF ROADS, PIPES, RESTRICTORS, CHANNELS, RETENTION FACILITIES, UTILITIES, ETC.).

2. THE IMPLEMENTATION OF THIS ESC PLAN AND THE CONSTRUCTION, MAINTENANCE, REPLACEMENT, AND UPGRADING OF THESE ESC FACILITIES IS THE RESPONSIBILITY OF THE PERMITTEE/CONTRACTOR UNTIL ALL CONSTRUCTION IS APPROVED.

3. THE BOUNDARIES OF THE CLEARING LIMITS SHOWN ON THIS PLAN SHALL BE SET BY SURVEY AND CLEARLY FLAGGED IN THE FIELD BY A CLEARING CONTROL FENCE PRIOR TO CONSTRUCTION. DURING THE CONSTRUCTION PERIOD, NO DISTURBANCE OR REMOVAL OF ANY GROUND COVER BEYOND THE FLAGGED CLEARING LIMITS SHALL BE PERMITTED. THE FLAGGING SHALL BE MAINTAINED BY THE PERMITTEE/CONTRACTOR FOR THE DURATION OF CONSTRUCTION. ALL GROUND COVER IS TO REMAIN OUTSIDE OF CLEARING AREA(S).

4. THE ESC FACILITIES SHOWN ON THIS PLAN MUST BE CONSTRUCTED IN CONJUNCTION WITH ALL CLEARING AND GRADING ACTIVITIES IN SUCH A MANNER AS TO ENSURE THAT SEDIMENT-LADEN WATER DOES NOT ENTER THE DRAINAGE SYSTEM OR VIOLATE APPLICABLE WATER STANDARDS, AND MUST BE INSTALLED AND IN OPERATION PRIOR TO ANY GRADING OR LAND CLEARING. WHEREVER POSSIBLE, MAINTAIN NATURAL VEGETATION FOR SILT CONTROL.

5. THE ESC FACILITIES SHOWN ON THIS PLAN ARE THE MINIMUM REQUIREMENTS FOR ANTICIPATED SITE CONDITIONS. DURING THE CONSTRUCTION PERIOD, THESE ESC FACILITIES SHALL BE UPGRADED (E.G., ADDITIONAL SUMPS, RELOCATION OF DITCHES AND SILT FENCES, ETC.) AS NEEDED FOR UNEXPECTED STORM EVENTS. ADDITIONALLY, MORE ESC FACILITIES MAY BE REQUIRED TO ENSURE COMPLETE SILTATION CONTROL. THEREFORE, DURING THE COURSE OF CONSTRUCTION IT SHALL BE THE OBLIGATION AND RESPONSIBILITY OF THE CONTRACTOR TO ADDRESS ANY NEW CONDITIONS THAT MAY BE CREATED BY HIS ACTIVITIES AND TO PROVIDE ADDITIONAL FACILITIES OVER AND ABOVE THE MINIMUM REQUIREMENTS AS MAY BE NEEDED.

6. ~~ESC FACILITIES SHALL BE INSPECTED BY THE PERMITEE/CONTRACTOR DAILY DURING RAINFALL PERIODS, TWO TIMES DAILY DURING A RAINFALL EVENT, AND AT THE END OF EVERY RAINFALL, AND MAINTAINED AS NECESSARY TO ENSURE THEIR CONTINUED FUNCTIONING. IN ADDITION, TEMPORARY SILTATION PONDS AND TEMPORARY SILTATION CONTROLS SHALL BE MAINTAINED IN A SATISFACTORY CONDITION UNTIL SUCH TIME THAT CLEARING AND/OR CONSTRUCTION IS COMPLETED, PERMANENT DRAINAGE FACILITIES ARE OPERATIONAL, AND THE POTENTIAL FOR EROSION HAS PASSED.~~

7. THE ESC FACILITIES ON INACTIVE SITES SHALL BE INSPECTED AND MAINTAINED A MINIMUM OF ONCE A MONTH OR WITHIN 48 HOURS FOLLOWING A STORM EVENT.

   DURING THE PERIOD FROM APRIL 1 TO OCTOBER 31, ALL DENUDED SOILS MUST BE STABILIZED WITHIN 15 DAYS WITH AN APPROVED TESC METHOD (E.G. SEEDING, MULCHING, PLASTIC COVERING, CRUSHED ROCK). BETWEEN NOVEMBER 1 AND MARCH 31, ALL DENUDED SOILS MUST BE COVERED WITHIN 12 HOURS. IF AN EROSION PROBLEM IS ALREADY EXISTING ON THE SITE, OTHER COVER PROTECTION AND EROSION CONTROL WILL BE REQUIRED.

8. ALL CATCH BASINS AND CONVEYANCE LINES SHALL BE CLEANED PRIOR TO PAVING. THE CLEANING OPERATION SHALL NOT FLUSH SEDIMENT-LADEN WATER INTO THE DOWNSTREAM SYSTEM.

9. STABILIZED CONSTRUCTION ENTRANCES AND WASH PADS SHALL BE INSTALLED AT THE BEGINNING OF CONSTRUCTION AND MAINTAINED FOR THE DURATION OF THE PROJECT. ADDITIONAL MEASURES MAY BE REQUIRED TO ENSURE THAT ALL PAVED AREAS ARE KEPT CLEAN FOR THE DURATION OF THE PROJECT.

10. ANY PERMANENT RETENTION/DETENTION FACILITY USED AS A TEMPORARY SETTLING BASIN SHALL BE MODIFIED WITH THE NECESSARY EROSION CONTROL MEASURES AND SHALL PROVIDE ADEQUATE STORAGE CAPACITY.
    THE DETENTION SYSTEM SHALL BE CLEANED WHEN GROUND COVER IS ESTABLISHED.

11. WHERE SEEDING FOR TEMPORARY EROSION CONTROL IS REQUIRED, FAST GERMINATING NATIVE SPECIES GRASSES SHALL BE APPLIED AT AN APPROPRIATE RATE.

12. REFER TO TECHNICAL SPECIFICATIONS SECTION 8-01 FOR MULCH.

13. ALL EROSION/SEDIMENTATION CONTROL PONDS WITH A DEAD STORAGE DEPTH EXCEEDING 6" MUST HAVE A PERIMETER FENCE WITH A MINIMUM HEIGHT OF 3'.

14. ALL WORK AND MATERIALS SHALL BE IN ACCORDANCE WITH WSDOT STANDARDS AND SPECIFICATIONS.

15. THE ESC FACILITIES SHALL BE CONSTRUCTED IN ACCORDANCE WITH THE DETAILS ON THE APPROVED PLANS. LOCATIONS MAY BE MOVED TO SUIT FIELD CONDITIONS, SUBJECT TO APPROVAL BY THE ENGINEER.

16. A COPY OF THE APPROVED EROSION CONTROL PLANS MUST BE ON THE JOB SITE WHENEVER CONSTRUCTION IS IN PROGRESS. A COPY SHALL BE SUBMITTED TO THE ENGINEER.

17. THE CLEARING CONTROL FENCE SHALL BE INSTALLED AT THE DRIP LINE OF TREES TO BE SAVED WHEREVER THE TREE CANOPIES EXTEND INTO THE AREA TO BE CLEARED. ON-SITE SUPERVISION SHALL BE PROVIDED WHENEVER EQUIPMENT MUST OPERATE UNDER TREE CANOPIES, AND FENCING SHALL BE REPLACED WHEN WORK IS FINISHED.

18. THE CLEARING CONTROL FENCE SHALL CONSIST OF A SINGLE STRAND OF WIRE ATTACHED ABOUT 3' HIGH TO WOOD LATH AT A 12' MAXIMUM SPACING AND FLAGGED WITH SURVEY RIBBON AT 4' INTERVALS.

19. OFF-SITE STREETS MUST BE KEPT CLEAN AT ALL TIMES. IF DIRT IS DEPOSITED ON THE PUBLIC STREET SYSTEM, THE STREET SHALL BE IMMEDIATELY CLEANED WITH POWER SWEEPER OR OTHER EQUIPMENT. ALL VEHICLES SHALL LEAVE THE SITE BY WAY OF THE CONSTRUCTION ENTRANCE AND SHALL BE CLEANED OF ALL DIRT THAT WOULD BE DEPOSITED ON THE PUBLIC STREETS.

20. ANY CATCH BASINS COLLECTING RUNOFF FROM THE SITE, WHETHER THEY ARE ON OR OFF THE SITE, SHALL HAVE CATCH BASIN INSERTS INSTALLED DURING CONSTRUCTION.

21. THE WASHED GRAVEL BACKFILL ADJACENT TO THE FILTER FABRIC FENCE SHALL BE REPLACED AND THE FILTER FABRIC CLEANED IF IT IS NONFUNCTIONAL BY EXCESSIVE SILT ACCUMULATION AS DETERMINED BY ENGINEER ALSO, ALL INTERCEPTOR SWALES SHALL BE CLEANED IF SILT ACCUMULATION EXCEEDS ONE-QUARTER DEPTH.

22. ROCK FOR EROSION PROTECTION OF ROADWAY DITCHES, WHERE REQUIRED, MUST BE OF SOUND QUARRY ROCK, PLACED TO A DEPTH OF 1' AND MUST MEET THE FOLLOWING SPECIFICATIONS: 4"-8" ROCK/40%-70% PASSING; 2"-4" ROCK/30%-40% PASSING; AND 1"-2" ROCK/ 10%-20% PASSING.

23. IF ANY PART(S) OF THE CLEARING LIMIT BOUNDARY OR TEMPORARY EROSION/SEDIMENTATION CONTROL FACILITY IS/ARE DAMAGED, IT SHALL BE REPAIRED IMMEDIATELY.

24. ALL PROPERTIES ADJACENT TO THE PROJECT SITE SHALL BE PROTECTED FROM SEDIMENT DEPOSITION AND RUNOFF.

25. DO NOT FLUSH CONCRETE BY-PRODUCTS OR TRUCKS NEAR OR INTO THE STORM DRAINAGE SYSTEM. STORM DRAIN SYSTEM DAMAGE BY CONCRETE FLUSHING SHALL BE CLEANED OR REPLACED BY THE CONTRACTOR.

kpff Consulting Engineers
1201 Third Avenue, Suite 900
Seattle, Washington 98101
(206) 622-5822 Fax (206) 622-8130

CALL 48 HOURS BEFORE YOU DIG 1-800-424-5555

ROLAND J. LEINKUELLER STATE OF WASHINGTON 24068 REGISTERED PROFESSIONAL ENGINEER 1/19/01 EXPIRES 8/1/01

FILE	ENGR.	REVIEW	SCALE	DATE
	MSG	RJL	SHOWN	10-00

NO.	REVISION	BY	REVIEW	DATE

CITY OF KIRKLAND WASHINGTON

CITY OF KIRKLAND
PUBLIC WORKS DEPARTMENT
123 FIFTH AVENUE – KIRKLAND, WA 98033-6189 – (425) 828-1243

N.E. 100TH STREET BRIDGE
TEMPORARY EROSION AND SEDIMENTATION CONTROL DETAILS

SHEET
C5

JOB NO. 100018, LEAKUER, JOHNSON

NOTES:

1. DIG TRENCH 525-825mm UPSTREAM FROM THE SEWN EDGE.
2. PLACE AND STAPLE APPROXIMATELY 75mm OF THE FRONT APRON IN THE TRENCH AND BACKFILL. PLACE THE REAR APRON UNDER THE CHECK DAM UNIT EXTENDING OUT THE DOWNSTREAM SIDE.
3. TO ASSEMBLE MORE THAN ONE SECTION, OVERLAP THE FABRIC 150mm WITH THE ENDS OF THE UNITS TIGHTLY ABUTTED.
4. STAPLE THE FRONT APRON DOWN IN THE TRENCH AND BACKFILL.
5. FINISH STAPLING USING THE PATTERN AS SHOWN IN PLAN VIEW.

* POINT "A" MUST BE A MINIMUM OF 75mm HIGHER THAN POINT "B" TO ENSURE THAT WATER FLOWS OVER THE DIKE AND NOT AROUND THE ENDS.

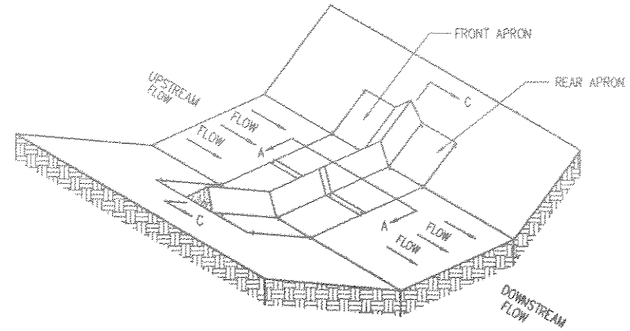

FLAT BOTTOMED DITCH ISOMETRIC VIEW

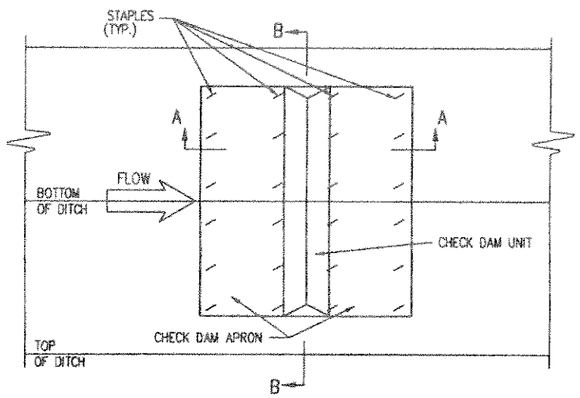

PLAN VIEW

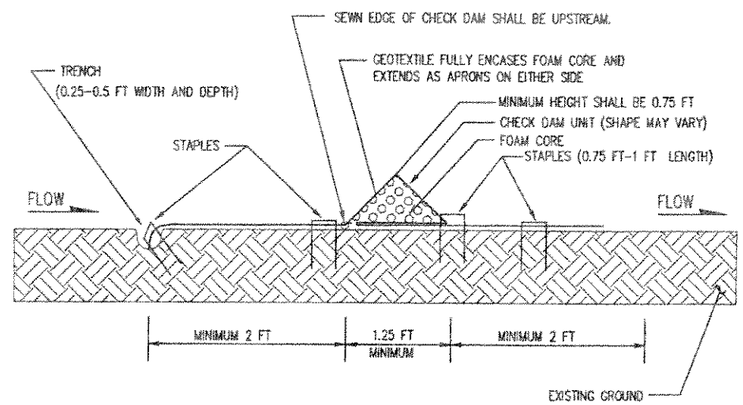

SIDE VIEW SECTION A-A

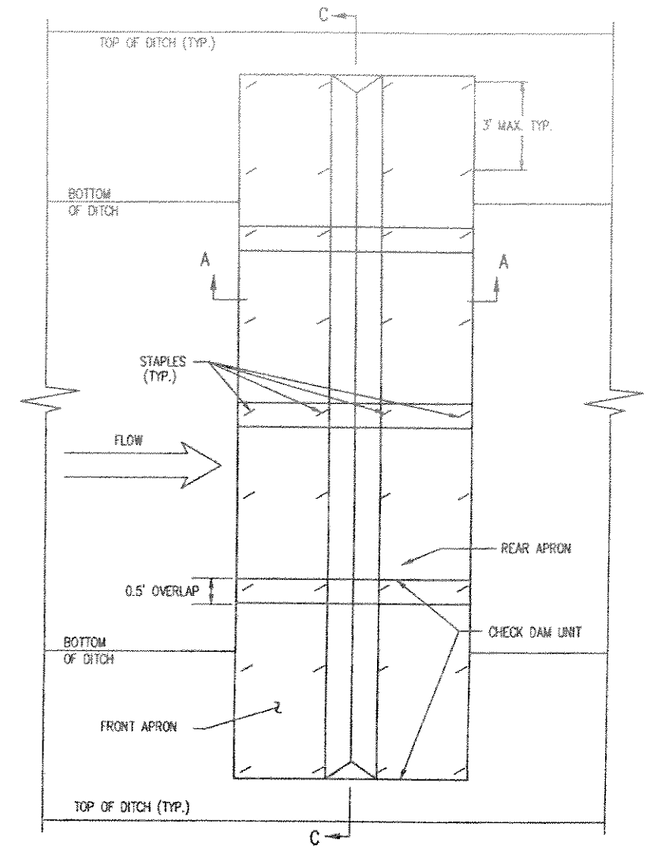

PLAN VIEW

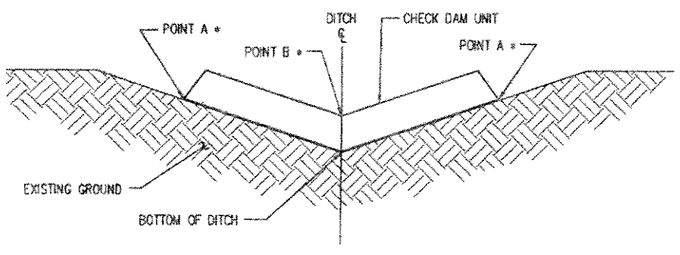

FRONT VIEW SECTION B-B

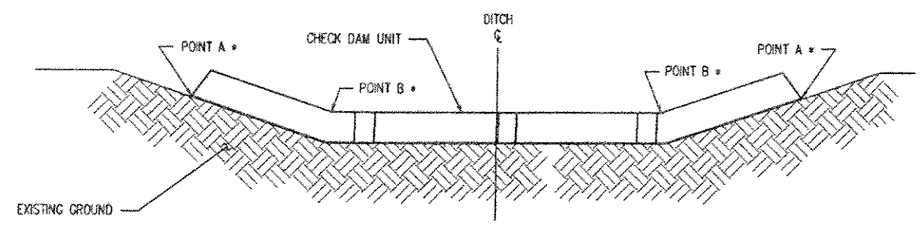

FRONT VIEW SECTION C-C

GEOTEXTILE ENCASED CHECK DAM INSTALLATION FOR V-BOTTOM DITCH

NTS

GEOTEXTILE ENCASED CHECK DAM INSTALLATION FOR FLAT BOTTOM DITCH

NTS

kpff Consulting Engineers
1201 Third Avenue, Suite 900
Seattle, Washington 98101
(206) 622-5822 Fax (206) 622-8130

CALL 48 HOURS BEFORE YOU DIG 1-800-424-5555

FILE	ENGR.	REVIEW	SCALE	DATE
	MSG	RJL	SHOWN	10-00

NO.	REVISION	BY	REVIEW	DATE

CITY OF KIRKLAND WASHINGTON

CITY OF KIRKLAND
PUBLIC WORKS DEPARTMENT
123 FIFTH AVENUE - KIRKLAND, WA 98033-6189 - (425) 828-1243

N.E. 100TH STREET BRIDGE
TEMPORARY EROSION AND SEDIMENTATION CONTROL DETAILS

SHEET C5.1

SW 1/4 SEC 33,
T26N, R5E, WM

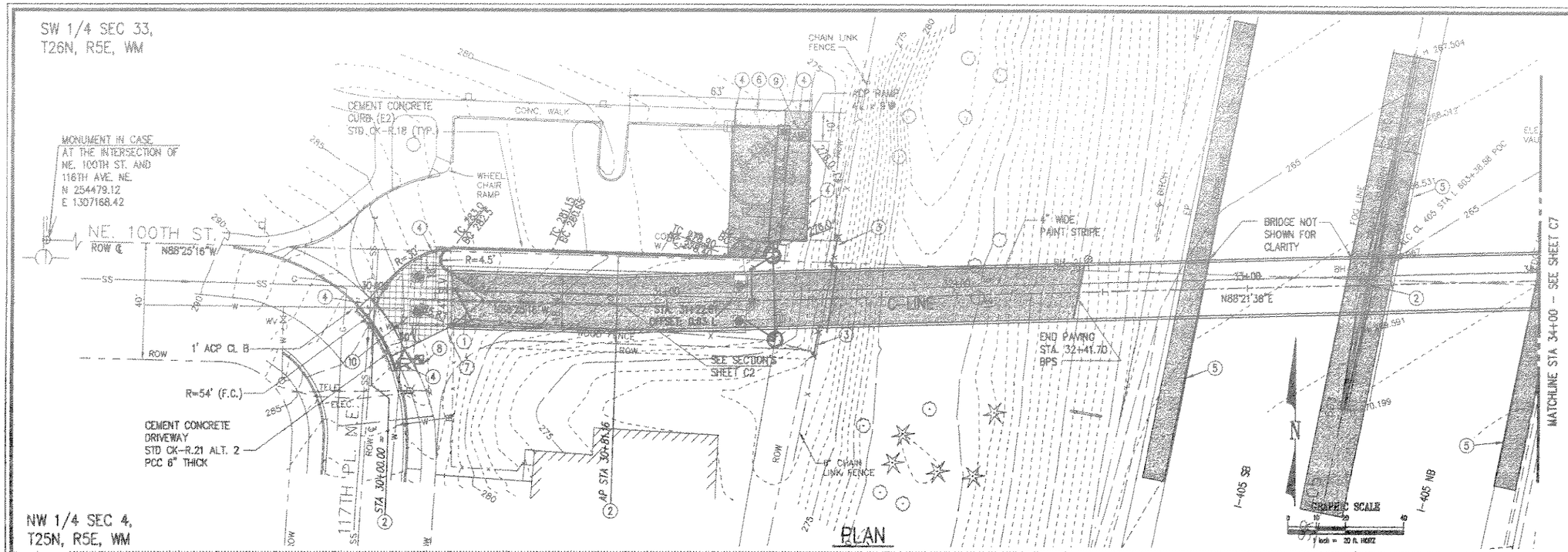

NW 1/4 SEC 4,
T25N, R5E, WM

PLAN

CONSTRUCTION NOTES

1. OPTICOM CONTROLLED SWING GATES. SEE STRUCTURAL AND ELECTRICAL DRAWINGS.
2. SEE SHEET C1 FOR CONSTRUCTION ℄ COORDINATES.
3. 6' CHAIN LINK FENCE PER WSDOT STD PLAN L-2, TYPE 3.
4. MATCH EXISTING GRADE
5. INTERSTATE SHOULDER REPAIR LIMITS STAKED BY ENGINEER UPON COMPLETION OF MEDIAN CONSTRUCTION.
6. SIDEWALK SIM STD PLAN CK-R.23 AND PER WSDOT STD PLAN F-3.
7. IRRIGATION SLEEVE 4"ø. TO BE INSTALLED BY CITY. CONTRACTOR SHALL COORDINATE.
8. WATER METER SERVICE 1" PER STD CK-W.17, W.18 AND W.21. TO BE INSTALLED BY CITY. CONTRACTOR SHALL COORDINATE.
9. REMOVABLE BOLLARD PER STD PLAN CK-R.61. SEE DETAIL, SHEET S 52.
10. ADJUST VALVE BOX TO GRADE.

ASPHALT CONCRETE PAVEMENT

PORTLAND CEMENT CONCRETE PAVEMENT CURB, GUTTER/SIDEWALK

PORTLAND CEMENT CONCRETE WITH ALTERNATING BASKET WEAVE FINISH

SEE DETAIL 1/C8.0

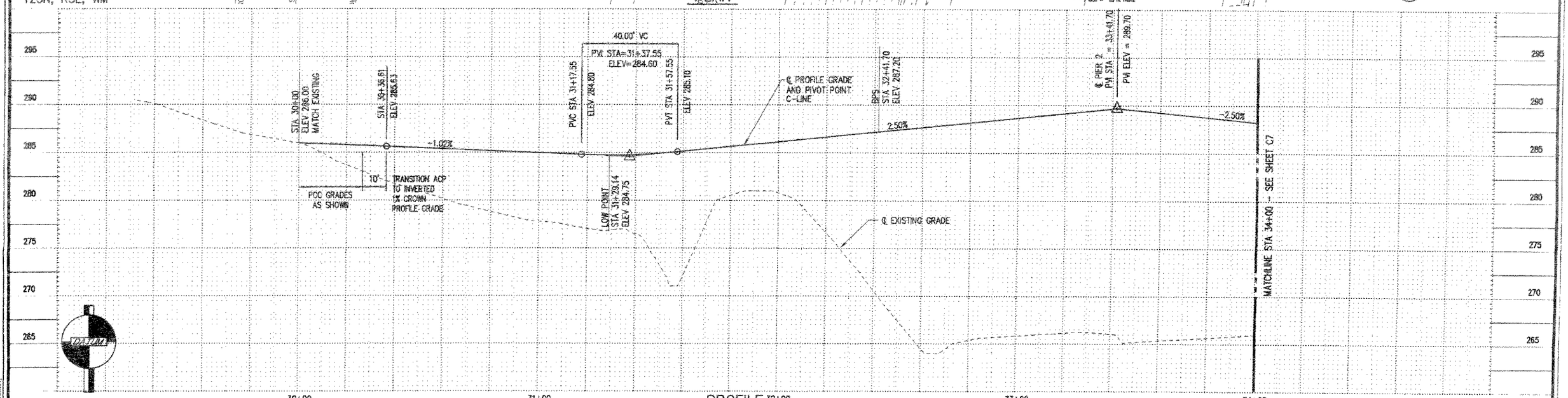

NGVD 1929

PROFILE
SCALE: HORZ. 1"=20'
VERT. 1"=5'

kpff Consulting Engineers
1201 Third Avenue, Suite 900
Seattle, Washington 98101
(206) 622-5822 Fax (206) 622-8130

CALL 48 HOURS
BEFORE YOU DIG
1-800-424-5555

FILE	ENGR.	REVIEW	SCALE	DATE
	MSG	RJL	SHOWN	10-00

NO.	REVISION	BY	REVIEW	DATE

CITY OF KIRKLAND
PUBLIC WORKS DEPARTMENT
123 FIFTH AVENUE - KIRKLAND, WA 98033-6189 - (206)828-1243

N.E. 100TH STREET BRIDGE
PAVING PLAN AND PROFILE
STA 30+00 TO STA 34+00

SHEET
C6

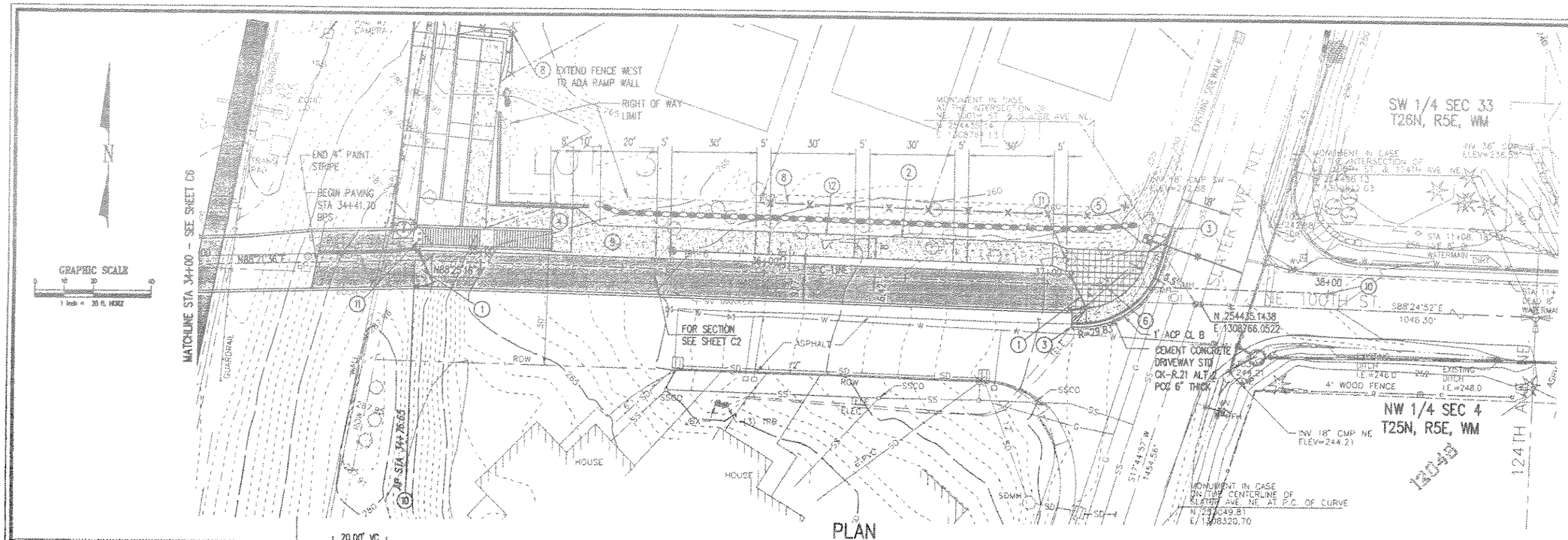

PLAN

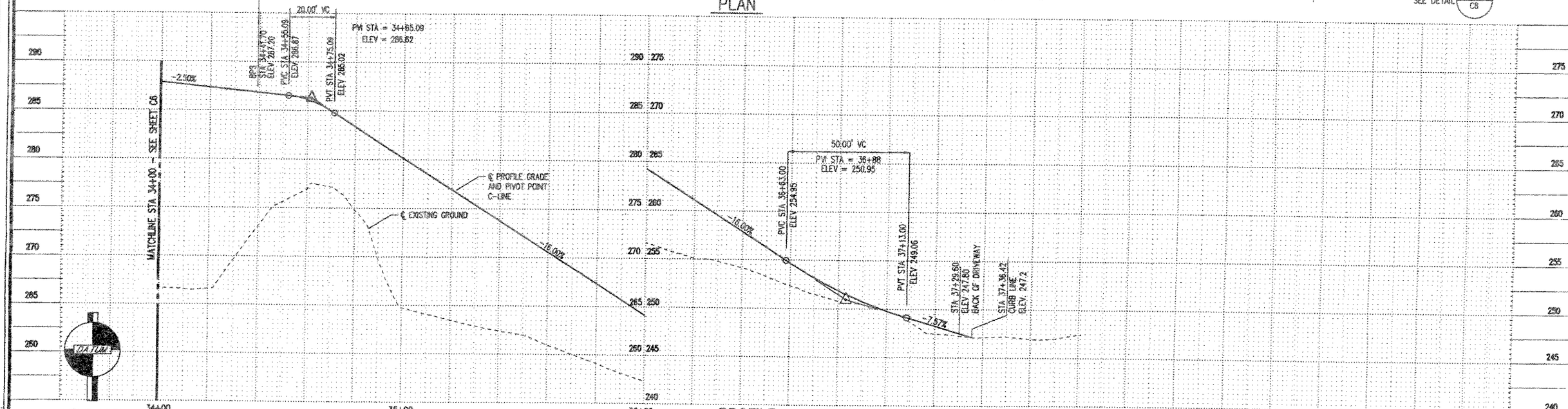

PROFILE

SCALE: HORZ. 1"=20'
VERT. 1"=5'

CONSTRUCTION NOTES

1. OPTICOM CONTROLLED SWING GATES. SEE STRUCTURAL AND ELECTRICAL DRAWINGS.
2. CONSTRUCT FOUNDATION IN SIDEWALK FOR HANDRAIL SEE S46 FOR PLAN AND S49 FOR DETAIL.
3. MATCH EXISTING SIDEWALK.
4. SEE STRUCTURAL DRAWINGS FOR LIMITS AND GRADES.
5. WATER METER SERVICE 1" PER STD CK-W.17, W.18 AND W.21. TO BE INSTALLED BY CITY. CONTRACTOR SHALL COORDINATE.
6. IRRIGATION SLEEVE 4"ø. TO BE INSTALLED BY CITY. CONTRACTOR SHALL COORDINATE.
7. SIDEWALK SIM STD PLAN CK-R.23 AND PER WSDOT SDT PLAN F-3.
8. 6' BOARD FENCE AT R/W. SEE DETAIL 2/C10
9. 8' WIDE SIDEWALK SEE SHEET S34 SEE SHEET C9 FOR GRADING
10. SEE SHEET C1 FOR CONSTRUCTION ℄ COORDINATES.
11. REMOVABLE BOLLARD PER STD PLAN CK-R.61. SEE DETAIL SHEET S 52.
12. FOR RAILING LOCATION SEE S46 FOR PLAN

ASPHALT CONCRETE PAVEMENT

PORTLAND CEMENT CONCRETE PAVEMENT CURB, GUTTER/SIDEWALK

PORTLAND CEMENT CONCRETE WITH ALTERNATING BASKET WEAVE FINISH

SEE DETAIL 1/C8

kpff Consulting Engineers
1201 Third Avenue, Suite 900
Seattle, Washington 98101
(206) 622-5822 Fax (206) 622-8130

CALL 48 HOURS BEFORE YOU DIG 1-800-424-5555

RONALD J. LEIMKUHLER, STATE OF WASHINGTON, 24089, REGISTERED PROFESSIONAL ENGINEER, SEPTEMBER 6/1/01

6/12/01

FILE	ENGR.	REVIEW	SCALE	DATE
	MSG	IH	SHOWN	10-00

NO.	REVISION	BY	REVIEW	DATE

CITY OF KIRKLAND WASHINGTON

CITY OF KIRKLAND
PUBLIC WORKS DEPARTMENT
123 FIFTH AVENUE - KIRKLAND, WA 98033-6189 - (206)828-1243

N.E. 100TH STREET BRIDGE
PAVING PLAN AND PROFILE
STA 34+00 TO STA 37+00

SHEET C7

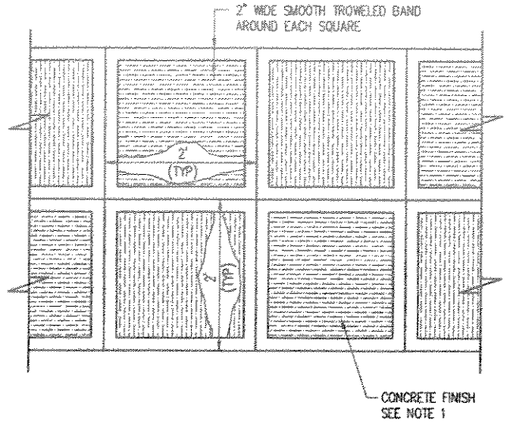

NOTE:

1. CONCRETE FINISH SHALL BE MEDIUM BROOM FINISH, ALTERNATING "BASKET WEAVE" DIRECTION

CONCRETE W/ BASKET WEAVE FINISH (1 / C7.0)
NTS

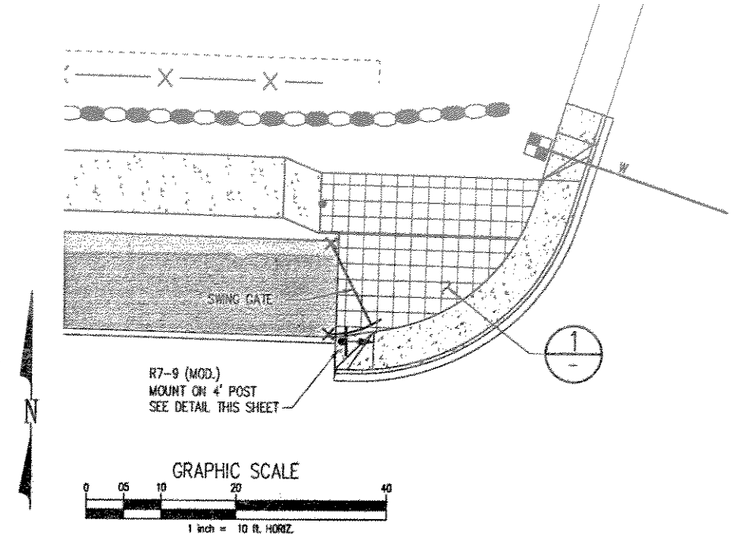

EAST APPROACH DETAIL (3 / C7.0)

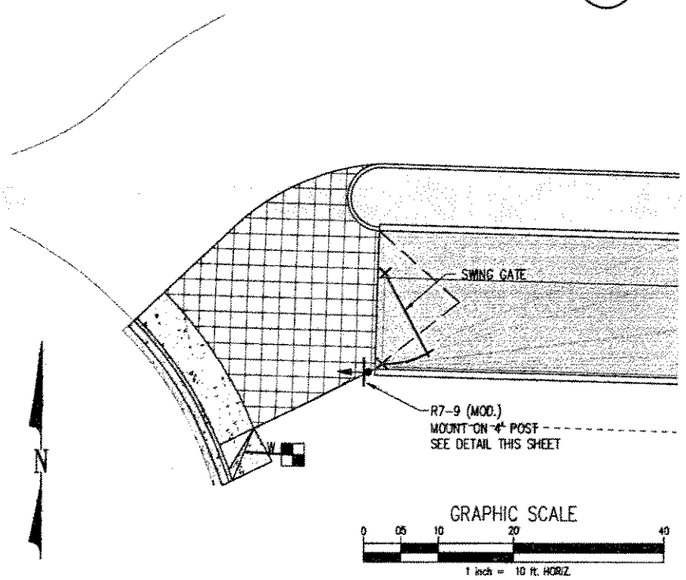

WEST APPROACH DETAIL (2 / C8.0)

R7-9 (MOD.)

DIMENSIONS (INCHES)				
A	B	C	D	
12	18	3	2	

COLORS: LEGEND — WHITE
BACKGROUND — RED

SIGN DETAILS (4 / –)
NTS

kpff Consulting Engineers
1201 Third Avenue, Suite 900
Seattle, Washington 98101
(206) 622-5822 Fax (206) 622-8130

CALL 48 HOURS BEFORE YOU DIG 1-800-424-5555

FILE	ENGR.	REVIEW	SCALE	DATE
	MSG	RJL	SHOWN	10-00

NO.	REVISION	BY	REVIEW	DATE

CITY OF KIRKLAND WASHINGTON

CITY OF KIRKLAND
PUBLIC WORKS DEPARTMENT
123 FIFTH AVENUE – KIRKLAND, WA 98033-6189 – (425) 828-1243

N.E. 100TH STREET BRIDGE
MISC. AND SIGNING DETAILS

SHEET C8

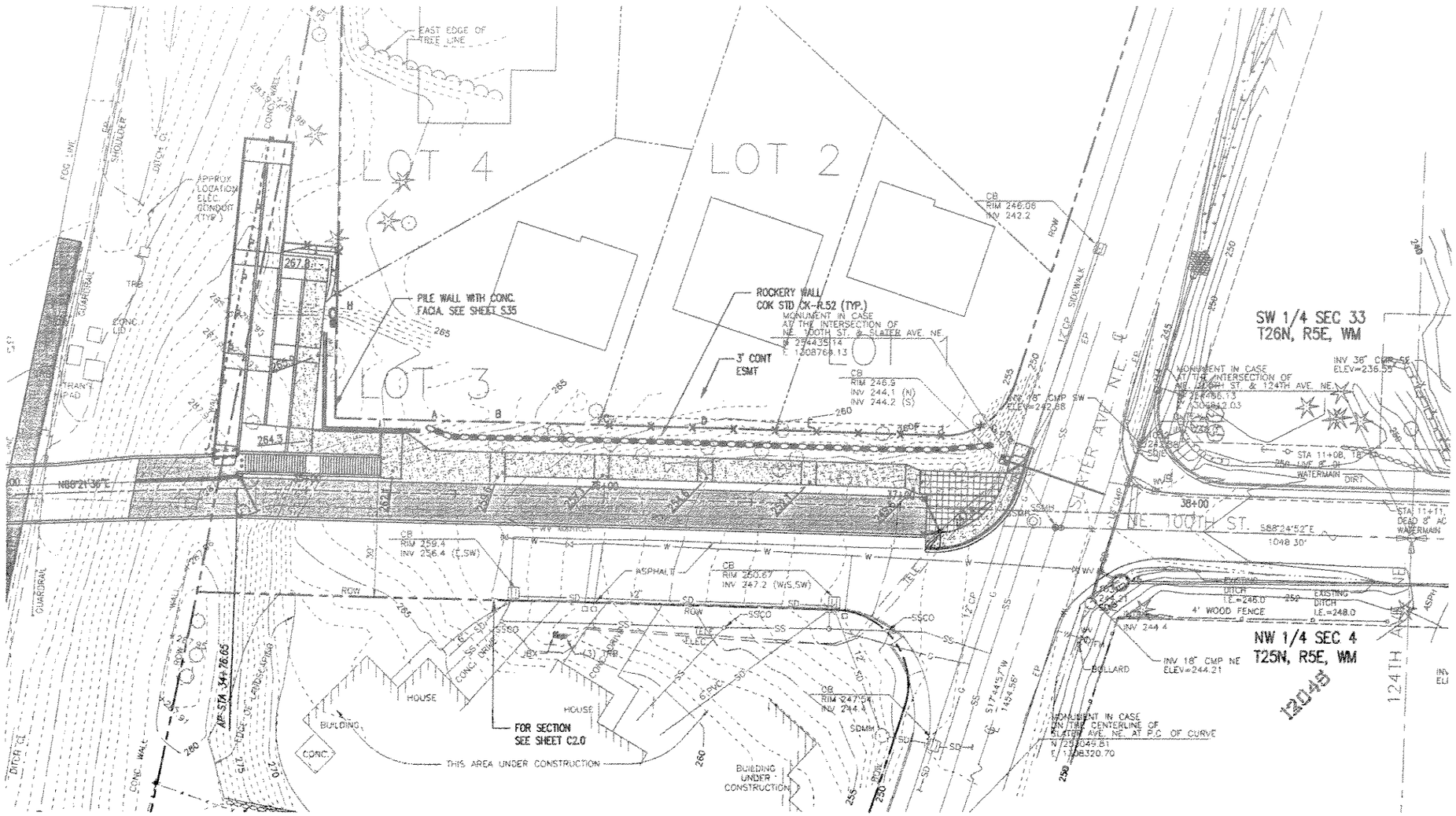

GRAPHIC SCALE

0 10 20 40

1 inch = 20 ft. SCAL

ROCKERY ELEVATION TABLE

LOCATION	OFFSET C-LINE	TOP OF WALL	BOTTOM OF WALL	REMARKS
A	22.0	268.0	261.5	MATCH PILE WALL
B	18.5	266.5	259.6	
C	18.5	262.2	257.1	
D	18.5	259.3	254.6	
E	18.5	258.5	252.1	
F	18.5	258.8	249.6	
G	21.0	251.0	248.0	STA 37+35
H	55.0	271.0	265.5	EXTEND TO 62' LT, 2' HIGH

DATUM

NGVD 1929

kpff Consulting Engineers

1201 Third Avenue, Suite 900
Seattle, Washington 98101
(206) 622-5822 Fax (206) 622-8130

CALL 48 HOURS BEFORE YOU DIG 1-800-424-5555

ROLAND J. LEINKUHLER — STATE OF WASHINGTON — 24360 — REGISTERED PROFESSIONAL ENGINEER — EXPIRES 06/05/01

6/12/01

FILE	ENGR.	REVIEW	SCALE	DATE
	MSG	IH	SHOWN	10-00

NO.	REVISION	BY	REVIEW	DATE

CITY OF KIRKLAND WASHINGTON

CITY OF KIRKLAND
PUBLIC WORKS DEPARTMENT
123 FIFTH AVENUE – KIRKLAND, WA 98033-6189 – (425) 828-1243

N.E. 100TH STREET BRIDGE
GRADING PLAN
STA 34+00 TO 37+00

SHEET C9

JOB NAME: NE 100TH ST BRIDGE
JOB #: 97280.31
XREFS: 100XSV, 100SVCK, LEMKUHL, 1D2ATB, 100MAP3
FILE PATH & NAME: V:\KIRKLAND PED BRIDGE\97280.4\CIVIL\100-C02.DWG
PLOTTED DATE & TIME: JUN 12, 2001 12:01:51 PM
INCORPORATED BY PLOT: DRAFT
PLOT SCALE: 1=1
PLOT SIZE: 12"x36" or 18" x 100'
PLOT MAP: GRPSCOPY
NO. | DATE | REVISIONS | BY | CHKD | APPD

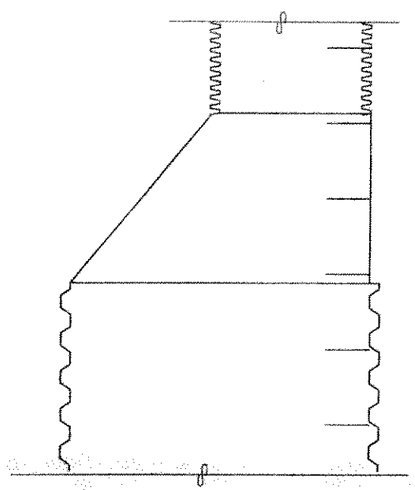

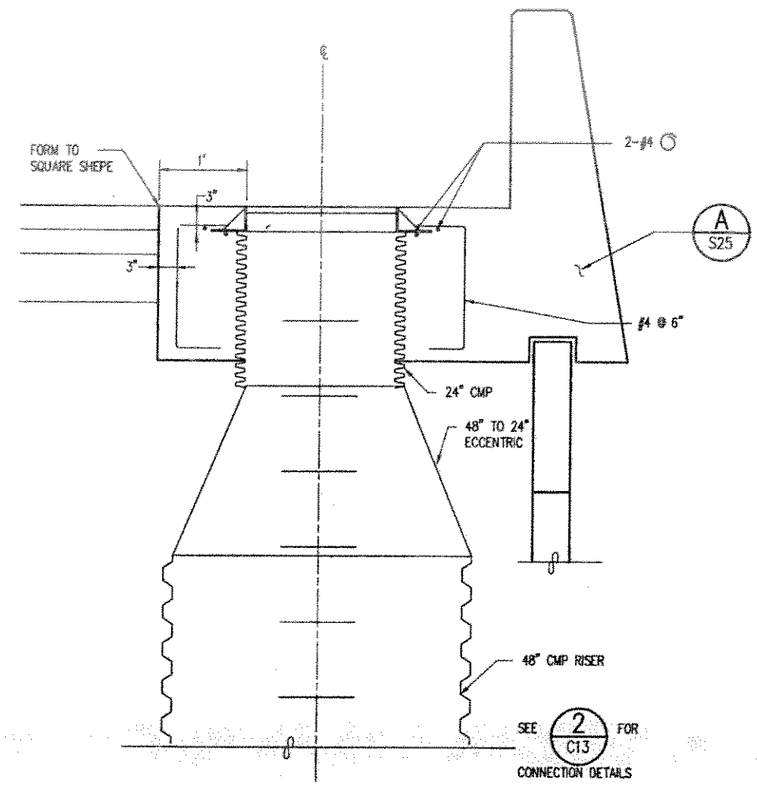

CMP RISER / BARRIER DETAIL (1 / C11)
1"=1'-0"

LAST REVISED: 11/30/99

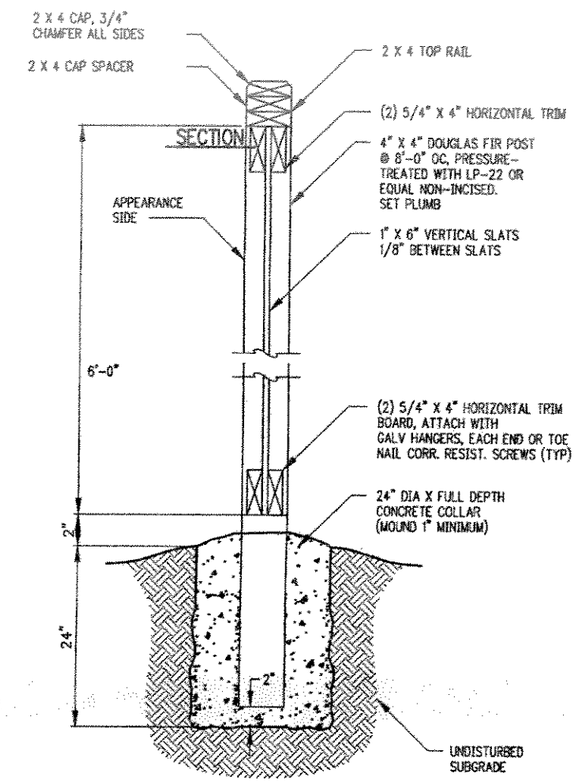

CITY OF KIRKLAND
PLAN NO. CK-R.64 M
BOARD FENCE MODIFIED

FENCE DETAIL CK-R.64 M (2 / C7)
NTS

kpff Consulting Engineers
1201 Third Avenue, Suite 900
Seattle, Washington 98101
(206) 622-5822 Fax (206) 622-8130

CALL 48 HOURS BEFORE YOU DIG 1-800-424-5555

FILE	ENGR.	REVIEW	SCALE	DATE
	MSG	RJL	SHOWN	10-00

NO.	REVISION	BY	REVIEW	DATE

CITY OF KIRKLAND
PUBLIC WORKS DEPARTMENT
123 FIFTH AVENUE – KIRKLAND, WA 98033-6189 – (425) 828-1243

N.E. 100TH STREET BRIDGE
MISCELLANEOUS DETAILS

SHEET C10

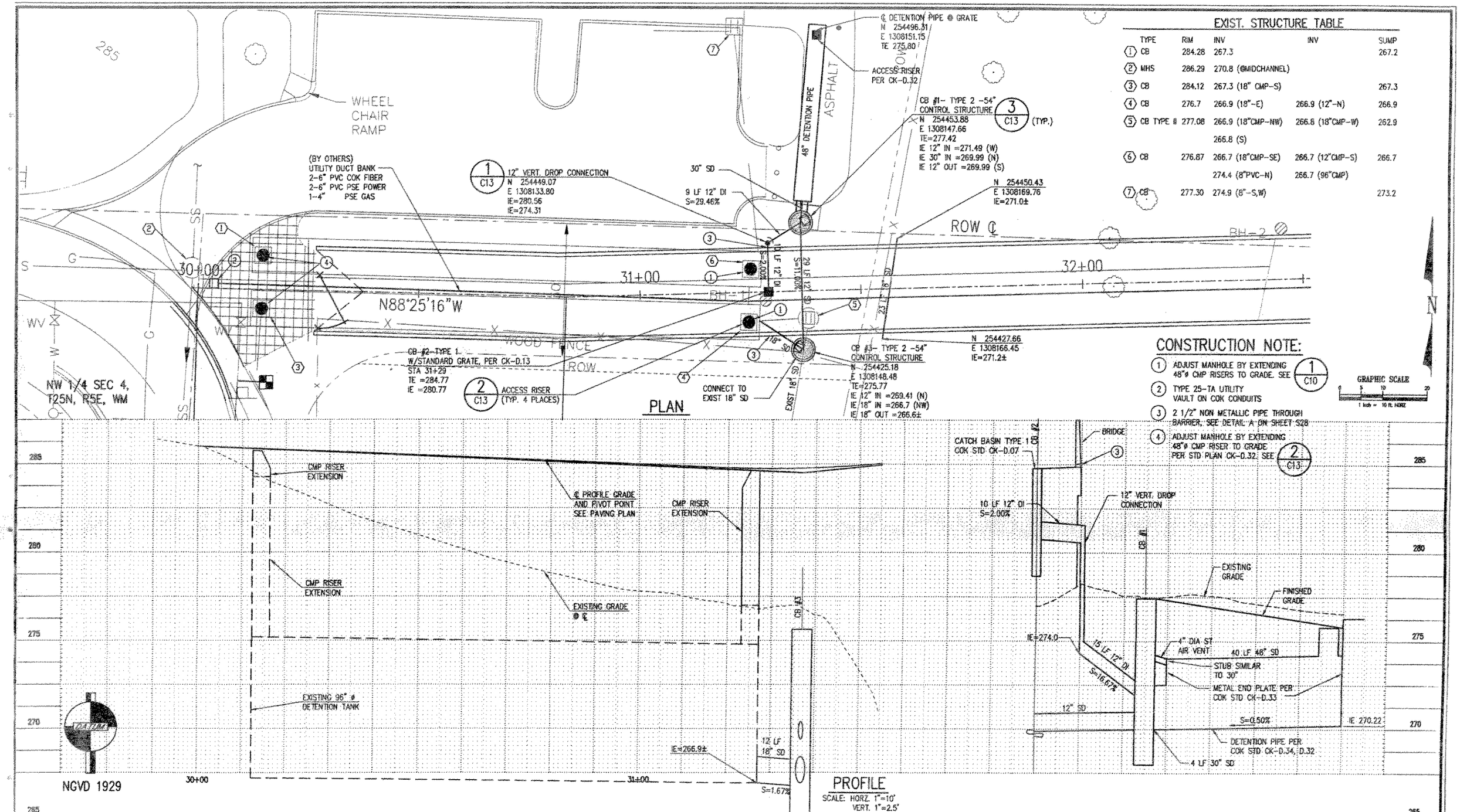

EXIST. STRUCTURE TABLE

	TYPE	RIM	INV	INV	SUMP
1	CB	284.28	267.3		267.2
2	MHS	286.29	270.8 (@MIDCHANNEL)		
3	CB	284.12	267.3 (18" CMP-S)		267.3
4	CB	276.7	266.9 (18"-E)	266.9 (12"-N)	266.9
5	CB TYPE II	277.08	266.9 (18"CMP-NW)	266.6 (18"CMP-W)	262.9
			266.8 (S)		
6	CB	276.87	266.7 (18"CMP-SE)	266.7 (12"CMP-S)	266.7
			274.4 (8"PVC-N)	266.7 (96"CMP)	
7	CB	277.30	274.9 (8"-S,W)		273.2

CONSTRUCTION NOTE:

1. ADJUST MANHOLE BY EXTENDING 48"ø CMP RISERS TO GRADE. SEE 1 C10
2. TYPE 25-TA UTILITY VAULT ON COK CONDUITS
3. 2 1/2" NON METALLIC PIPE THROUGH BARRIER, SEE DETAIL A ON SHEET S28
4. ADJUST MANHOLE BY EXTENDING 48"ø CMP RISER TO GRADE PER STD PLAN CK-D.32. SEE 2 C13

PROFILE

SCALE: HORZ. 1"=10'
VERT. 1"=2.5'

kpff Consulting Engineers
1201 Third Avenue, Suite 900
Seattle, Washington 98101
(206) 622-5822 Fax (206) 622-8130

CALL 48 HOURS BEFORE YOU DIG 1-800-424-5555

FILE	ENGR.	REVIEW	SCALE	DATE
	MSG	RJL	SHOWN	10-00

NO.	REVISION	BY	REVIEW	DATE

CITY OF KIRKLAND WASHINGTON

CITY OF KIRKLAND
PUBLIC WORKS DEPARTMENT
123 FIFTH AVENUE - KIRKLAND, WA 98033-6189 - (206)828-1243

N.E. 100TH STREET BRIDGE
DRAINAGE PLAN AND PROFILE
STA 30+00 TO STA 32+50

SHEET C11

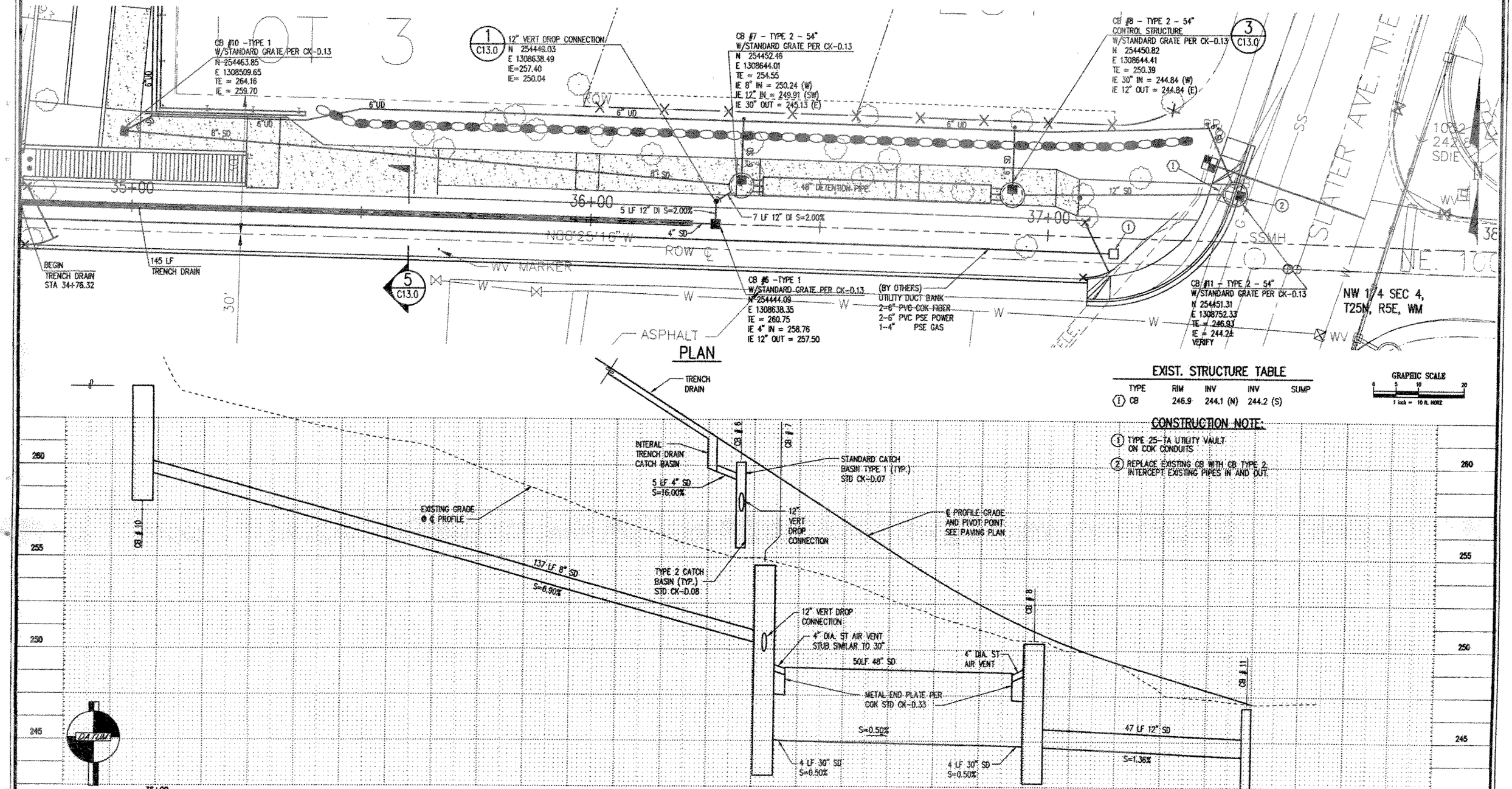

EXIST. STRUCTURE TABLE

	TYPE	RIM	INV	INV	SUMP
1	CB	246.9	244.1 (N)	244.2 (S)	

CONSTRUCTION NOTE:

1. TYPE 25-TA UTILITY VAULT ON COK CONDUITS
2. REPLACE EXISTING CB WITH CB TYPE 2. INTERCEPT EXISTING PIPES IN AND OUT.

kpff Consulting Engineers
1201 Third Avenue, Suite 900
Seattle, Washington 98101
(206) 622-5822 Fax (206) 622-8130

CALL 48 HOURS BEFORE YOU DIG 1-800-424-5555

RONALD J. LEMKUHL — STATE OF WASHINGTON — 24090 — REGISTERED PROFESSIONAL ENGINEER — EXPIRES 9/1/01

FILE	ENGR.	REVIEW	SCALE	DATE
	MSG	IH	SHOWN	10-00

NO.	REVISION	BY	REVIEW	DATE

CITY OF KIRKLAND WASHINGTON

CITY OF KIRKLAND
PUBLIC WORKS DEPARTMENT
123 FIFTH AVENUE - KIRKLAND, WA 98033-6189 - (206)828-1243

N.E. 100TH STREET BRIDGE
DRAINAGE PLAN AND PROFILE
STA 34+50 TO STA 37+00

SHEET
C12

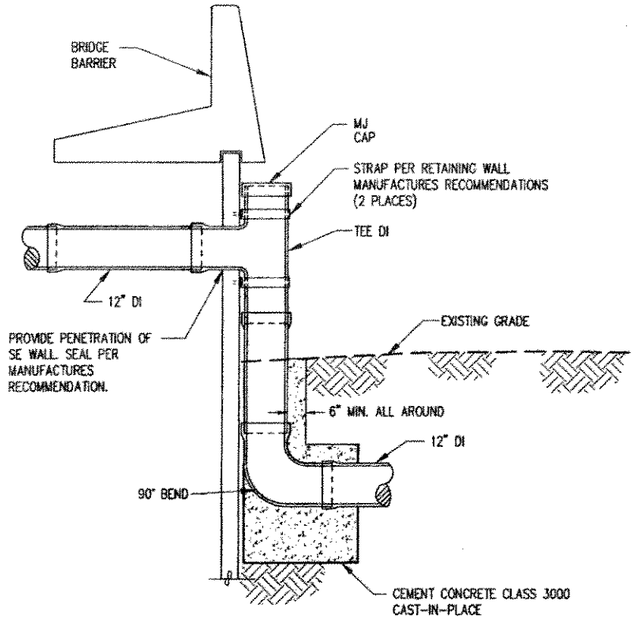

DROP CONNECTION 1/C11
1/2"=1'

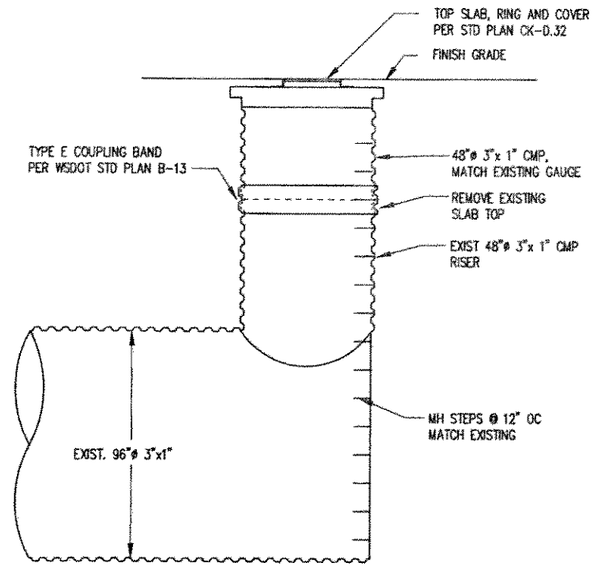

SECTION

CMP RISER DETAIL 2/C11
3/8"=1'

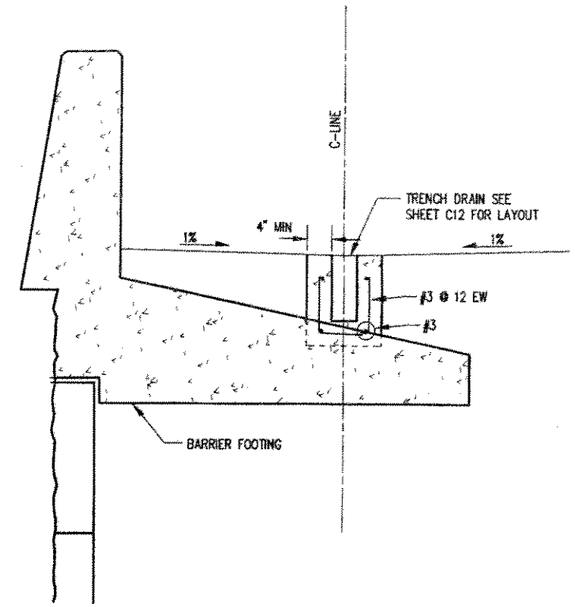

SECTION 5/C12
NTS

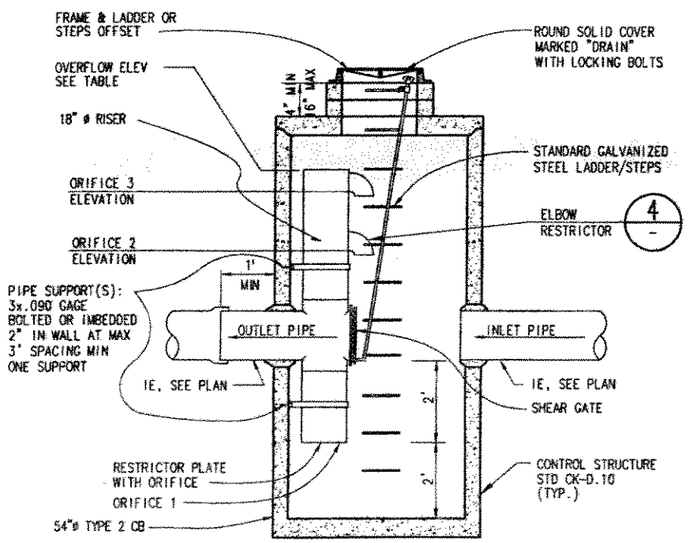

DETENTION CONTROL STRUCTURE 3/C11
NTS

CONTROL STRUCTURE TABLE

CONTROL STRUCTURE	ORIFICE 1 DIAMETER	ORIFICE 2		ORIFICE 3		OVERFLOW ELEV
		DIAMETER	ELEV	DIAMETER	ELEV	
CB 1	15/16"	2¼"	271.62	1 5/16"	272.00	272.34
CB 3	7 3/16"*	–	–	–	–	275.00*
CB 8	15/16"	2⅞"	247.15	1 9/16"	247.80	248.54

* MATCH EXISTING CONFIGURATION, FIELD VERIFY

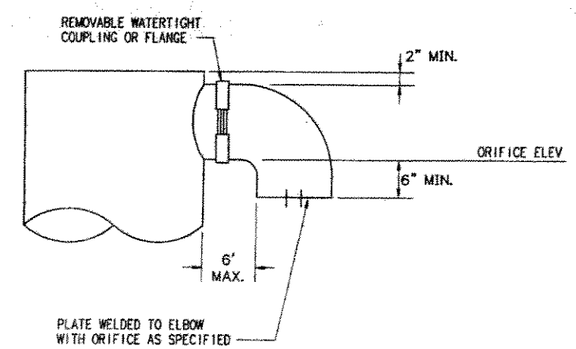

ELBOW RESTRICTOR DETAIL 4/-
NTS

kpff Consulting Engineers
1201 Third Avenue, Suite 900
Seattle, Washington 98101
(206) 622-5822 Fax (206) 622-8130

CALL 48 HOURS BEFORE YOU DIG 1-800-424-5555

FILE	ENGR.	REVIEW	SCALE	DATE
	MSG	RJL	SHOWN	10-00

NO.	REVISION	BY	REVIEW	DATE

CITY OF KIRKLAND WASHINGTON

CITY OF KIRKLAND
PUBLIC WORKS DEPARTMENT
123 FIFTH AVENUE – KIRKLAND, WA 98033-6189 – (425) 828-1243

N.E. 100TH STREET BRIDGE
DRAINAGE DETAILS

SHEET C13

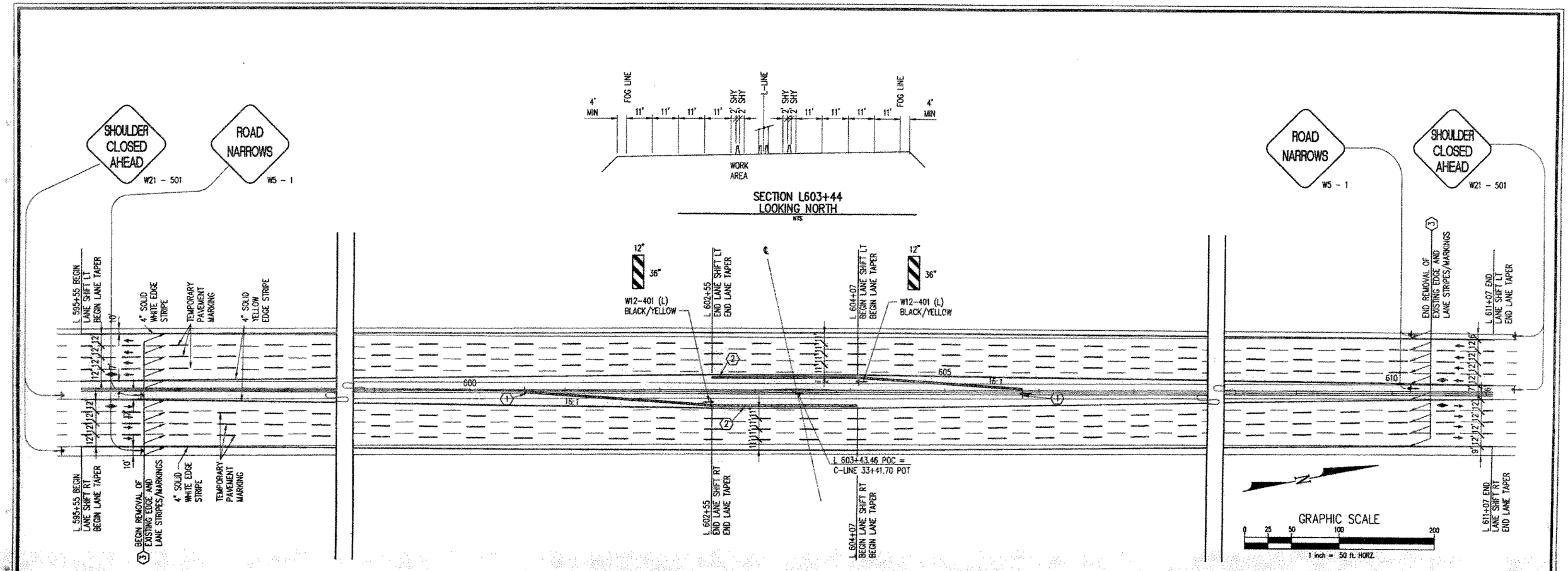

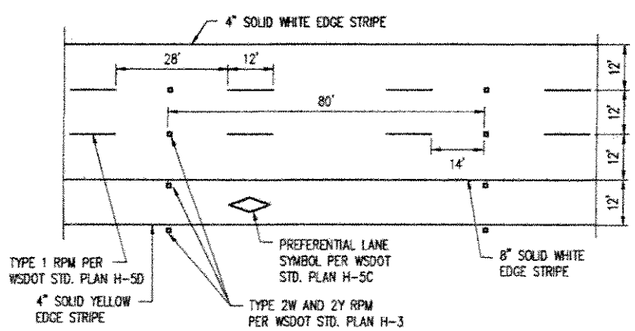

PERMANENT STRIPING
S.B. LANES SHOWN, N.B. SIMILAR
NTS

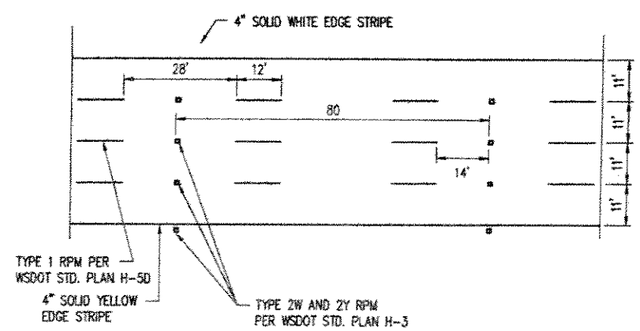

TEMPORARY STRIPING
S.B. LANES SHOWN, N.B. SIMILAR
NTS

CONSTRUCTION NOTES

1. CONNECT TEMPORARY CONCRETE BARRIER TO MEDIAN BARRIER WITH 12' SECTION THRIE BEAM GUARDRAIL. ATTACH GUARDRAIL TO BARRIER WITH END SECTION DESIGN F PER WSDOT STD PLAN C-7.
2. TEMPORARY CONCRETE BARRIER TYPE 2 PER WSDOT STANDARD PLAN C-8.
3. SR 405 MAINLINE CHANNELIZATION WITHIN PROJECT LIMITS TO BE RESTORED TO MATCH EXISTING CONDITIONS UPON REMOVAL OF TEMPORARY PAVEMENT MARKINGS.

GENERAL NOTES

1. TEMPORARY PAVEMENT MARKINGS SHALL NOT BE TAPE.
2. SEE SHEETS C15 AND C16 FOR ADDITIONAL CLASS A CONST. SIGNS.

kpff Consulting Engineers
1201 Third Avenue, Suite 900
Seattle, Washington 98101
(206) 622-5822 Fax (206) 622-8130

CALL 48 HOURS BEFORE YOU DIG 1-800-424-5555

FILE	ENGR.	REVIEW	SCALE	DATE
	MSG	RJL	SHOWN	10-00

NO.	REVISION	BY	REVIEW	DATE

CITY OF KIRKLAND WASHINGTON

CITY OF KIRKLAND
PUBLIC WORKS DEPARTMENT
123 FIFTH AVENUE - KIRKLAND, WA 98033-6189 - (425) 828-1243

N.E. 100TH STREET BRIDGE
TRAFFIC CONTROL PLAN

SHEET
C14

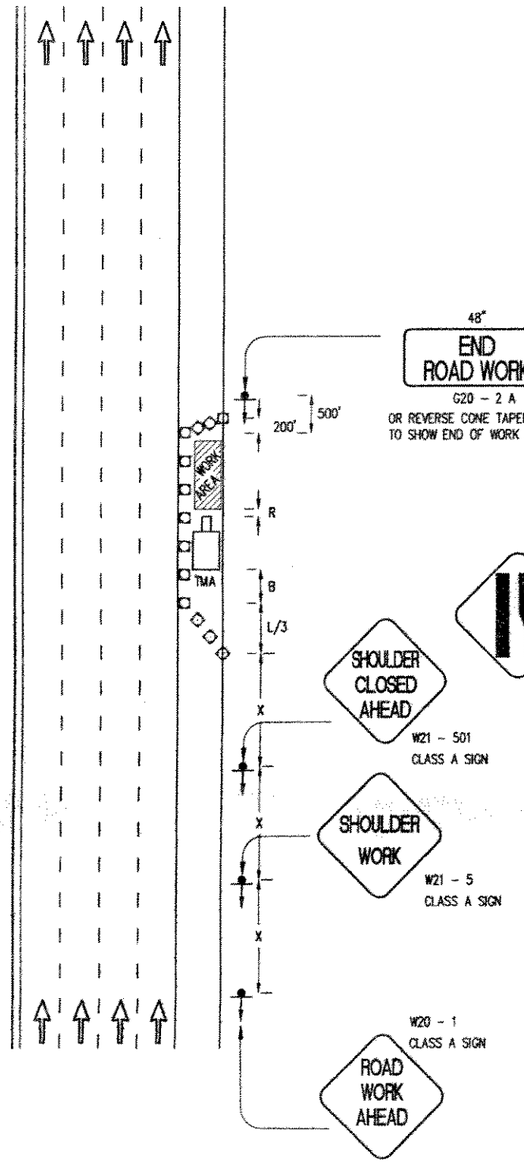

TRAFFIC CONTROL PLAN
SHOULDER CLOSURE - L LINE (SR-405)
NTS

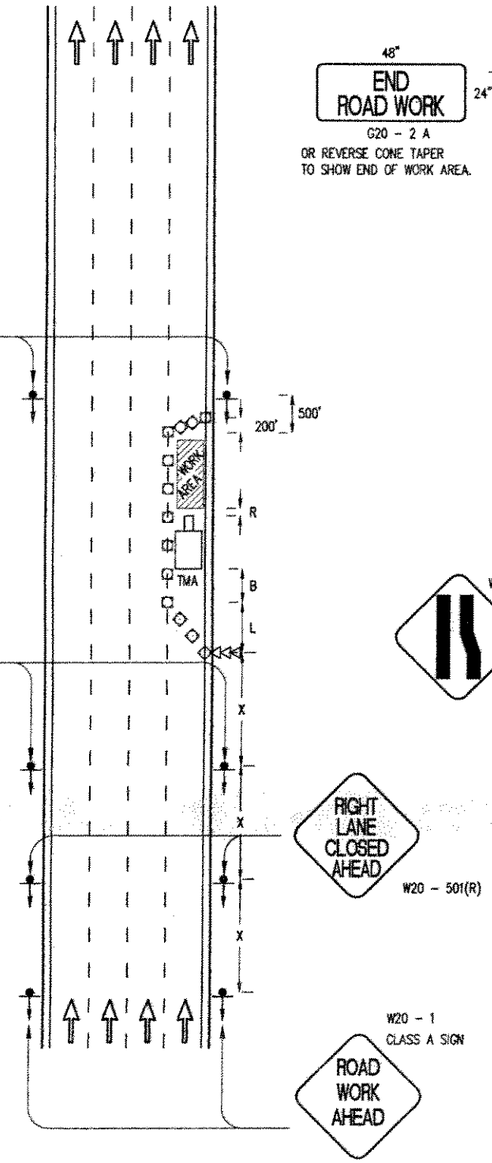

TRAFFIC CONTROL PLAN
SINGLE LANE CLOSURE - L LINE (SR-405)
NTS

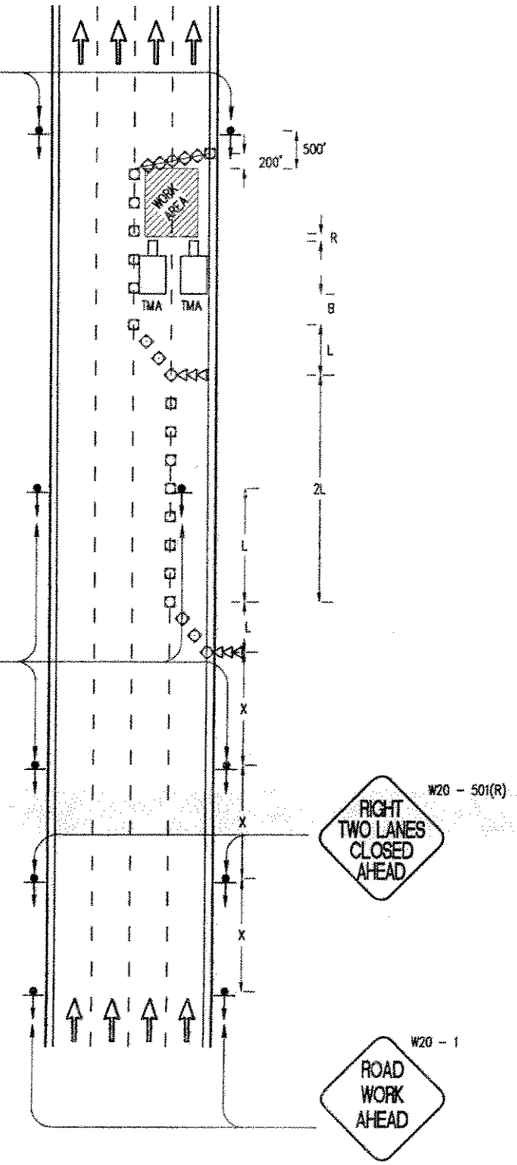

TRAFFIC CONTROL PLAN
TWO LANE CLOSURE - L LINE (SR-405)
NTS

LEGEND

- □ CHANNELIZING DEVICES
- TMA TRUCK MOUNTED ATTENUATOR
- SEQUENTIAL ARROW SIGN
- CONSTRUCTION SIGN

GENERAL NOTES

1. WHEN LEFT TWO LANES ARE CLOSED, W4-2(R) AND W20-5(R) SHALL BE REPLACED WITH W4-2(L) AND W20-5L SIGNS RESPECTIVELY.
2. STEADY BURNING WARNING LIGHTS (TYPE C, MUTCD) SHALL BE USED TO MARK CHANNELIZING DEVICES AT NIGHT ON SR-405.
3. ALL CONSTRUCTION SIGNS SHALL BE BLACK ON ORANGE 48" x 48" IN SIZE UNLESS OTHERWISE NOTED IN THE PLANS.

TRAFFIC CONTROL INSTALLATION

1. L LINE - USE TRAFFIC SAFTEY DRUMS, SEQUENTIAL ARROW SIGNS, AND SIGNING TO CLOSE TWO LANES PER SETUP NB AND SB ON SR-405 L LINE TO INSTALL TEMPORARY BARRIER AND STRIPING AT NIGHT. A TRUCK WITH FLASHER AND TRUCK MOUNTED ATTENUATOR SHALL BE USED PRIOR TO WORK AREA AND BEHIND BARRELS IN EACH LANE CLOSED TO TRAFFIC.

SIGN SPACING TABLE	
SPEED	X (FT)
55/70 MPH	1500'±
45/55 MPH	500' ±
35/40 MPH	350' ±
25/30 MPH	200' ±

CHANNELIZING DEVICE SPACING (FT)		
MPH	Taper	Tangent
50/70	40	80
35/45	30	60
25/30	20	40

MINIMUM TAPER LENGTH = L (FEET)										
LANE WIDTH (FEET)	POSTED SPEED (MPH)									
	25	30	35	40	45	50	55	60	65	70
10	105	150	205	270	450	500	550	–	–	–
11	115	165	225	295	495	550	605	660	–	–
12	125	180	245	320	540	600	660	720	780	840

BUFFER DATA										
BUFFER SPACE = B										
SPEED (MPH)	25	30	35	40	45	50	55	60	65	70
LENGTH (FEET)	55	85	120	170	220	280	335	415	485	585

BUFFER VEHICLE ROLL AHEAD DISTANCE = R		
BUFFERED VEHICLE WEIGHT	STATIONARY OPERATION	MOVING OPERATION
15,000 LBS	25'	75'
24,000 LBS	25'	75'

ROLL AHEAD STOPPING DISTANCE ASSUMES A 4,500 LB IMPACTING VEHICLE AT 65 MPH SPEED AND DRY PAVEMENT

kpff Consulting Engineers
1201 Third Avenue, Suite 900
Seattle, Washington 98101
(206) 622-5822 Fax (206) 622-8130

CALL 48 HOURS BEFORE YOU DIG 1-800-424-5555

FILE	ENGR.	REVIEW	SCALE	DATE
	MSG	RJL	SHOWN	10-00

NO.	REVISION	BY	REVIEW	DATE

CITY OF KIRKLAND WASHINGTON

CITY OF KIRKLAND
PUBLIC WORKS DEPARTMENT
123 FIFTH AVENUE - KIRKLAND, WA 98033-6189 - (425) 828-1243

N.E. 100TH STREET BRIDGE
TRAFFIC CONTROL INSTALLATION PLAN

SHEET
C15

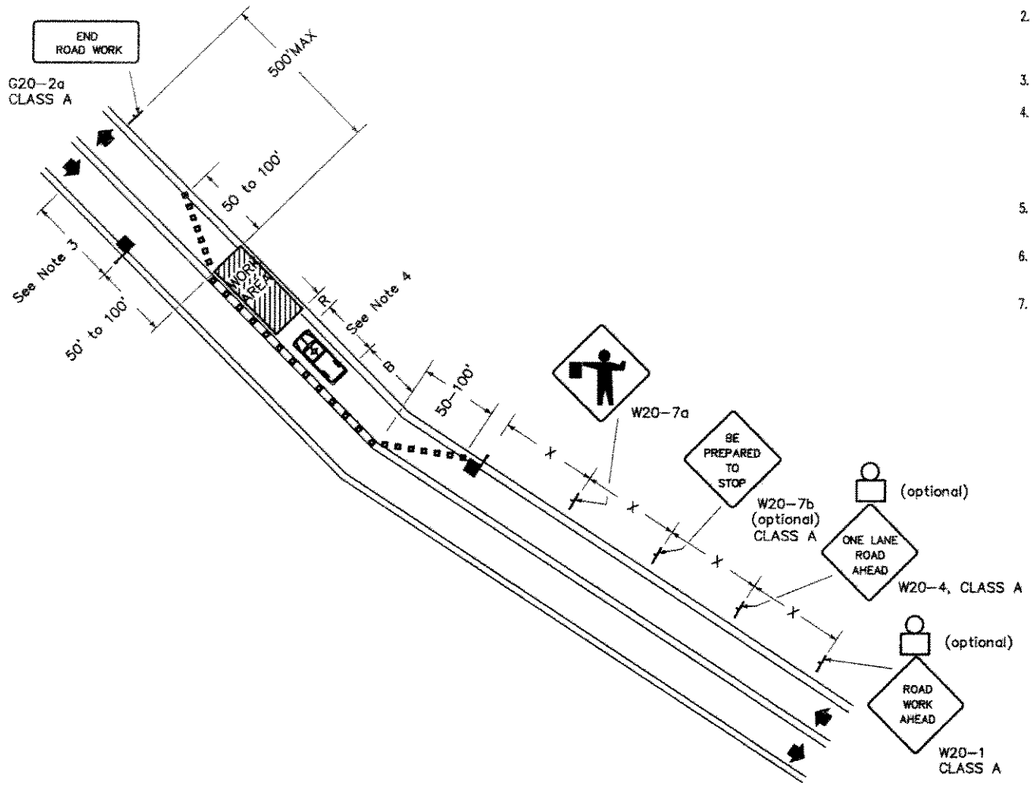

NOTES

1. FLAGGER STATIONS SHALL BE ILLUMINATED DURING HOURS OF DARKNESS.
2. IF ENTIRE WORK AREA IS VISIBLE FROM ONE STATION, ONE FLAGGER MAY BE USED, OTHERWISE TWO FLAGGERS AND SIGNING WILL BE REQUIRED EACH DIRECTION.
3. SIGN SEQUENCE IS THE SAME FOR BOTH DIRECTIONS OF TRAVEL.
4. SEE BUFFER DATA TABLE. USE OF BUFFER VEHICLE IS RECOMMENDED, IT MAY BE A WORK VEHICLE. IF BUFFER VEHICLE IS USED, MINIMUM FROM END OF TAPER TO WORK AREA SHALL BE TOTAL OF "R" (ROLL AHEAD DISTANCE) PLUS LENGTH OF VEHICLE, PLUS "B" (BUFFER SPACE). IF BUFFER VEHICLE IS NOT USED, MINIMUM DISTANCE SHALL BE "B".
5. STEADY BURNING WARNING LIGHTS (TYPE C, MUTCD) SHOULD BE USED TO MARK CHANNELIZING DEVICES AT NIGHT AS NEEDED.
6. EITHER REVERSE CONE TAPER OR SIGN G20-2A MAY BE USED TO SHOW END OF WORK AREA.
7. A MINIMUM OF 5 CHANNELIZING DEVICES SHALL BE USED IN THE TAPERS.

LEGEND

- CHANNELIZING DEVICES
- FLAGGER
- TYPE A FLASHING WARNING LIGHT

TYPICAL APPLICATION OF TRAFFIC CONTROL DEVICES ON A TWO-LANE HIGHWAY WHERE ONE LANE IS CLOSED AND FLAGGING IS PROVIDED.

SIGN SPACING TABLE	
SPEED	X (FT)
55/70 MPH	1500'±
45/55 MPH	500'±
35/40 MPH	350'±
25/30 MPH	200'±

CHANNELIZING DEVICE SPACING (FT)		
MPH	Taper	Tangent
50/70	40	80
35/45	30	60
25/30	20	40

BUFFER DATA										
BUFFER SPACE = B										
SPEED (MPH)	25	30	35	40	45	50	55	60	65	70
LENGTH (FEET)	55	85	120	170	220	280	335	415	485	585
BUFFER VEHICLE ROLL AHEAD DISTANCE = R										

BUFFERED VEHICLE WEIGHT	STATIONARY OPERATION	MOVING OPERATION
15,000 LBS	25'	75'
24,000 LBS	25'	75'

ROLL AHEAD STOPPING DISTANCE ASSUMES A 4,500 LB IMPACTING VEHICLE AT 65 MPH SPEED AND DRY PAVEMENT

TRAFFIC CONTROL PLAN
SINGLE LANE CLOSURE ON A TWO LANE ROAD – L LINE
NTS

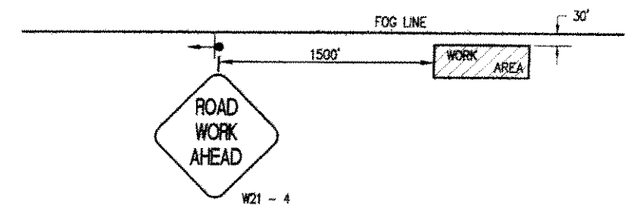

THE SIGN SHOWN IS NOT REQUIRED IF THE WORK SPACE IS BEHIND A BARRIER, OR 30 FEET OR MORE FROM THE EDGE OF ANY ROADWAY.

TRAFFIC CONTROL PLAN
WORK BEYOND THE SHOULDER – L LINE (SR-405)
NTS

kpff Consulting Engineers
1201 Third Avenue, Suite 900
Seattle, Washington 98101
(206) 622-5822 Fax (206) 622-8130

CALL 48 HOURS BEFORE YOU DIG 1-800-424-5555

FILE	ENGR.	REVIEW	SCALE	DATE
	MSG	RJL	SHOWN	10-00

NO.	REVISION	BY	REVIEW	DATE

CITY OF KIRKLAND WASHINGTON

CITY OF KIRKLAND
PUBLIC WORKS DEPARTMENT
123 FIFTH AVENUE – KIRKLAND, WA 98033-6189 – (425) 828-1243

N.E. 100TH STREET BRIDGE
TRAFFIC CONTROL INSTALLATION PLAN

SHEET
C16

SEC 33, T.26 N., R.5E., & SEC 4, T.25N., R.5E., W.M.

KING COUNTY

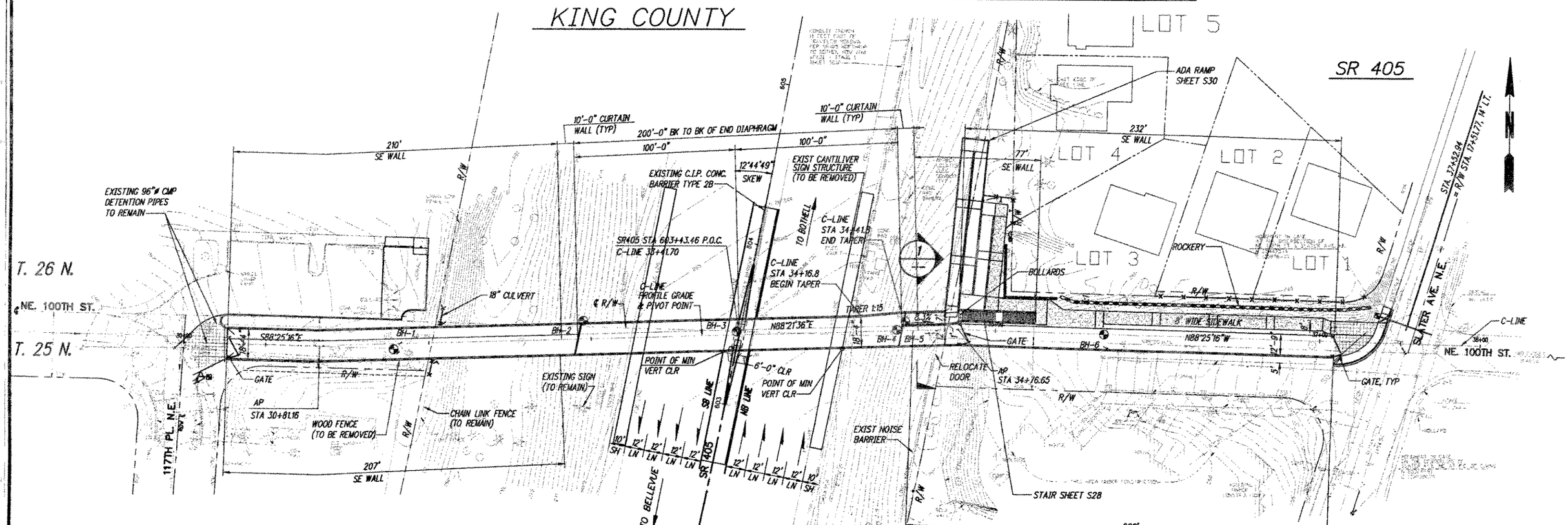

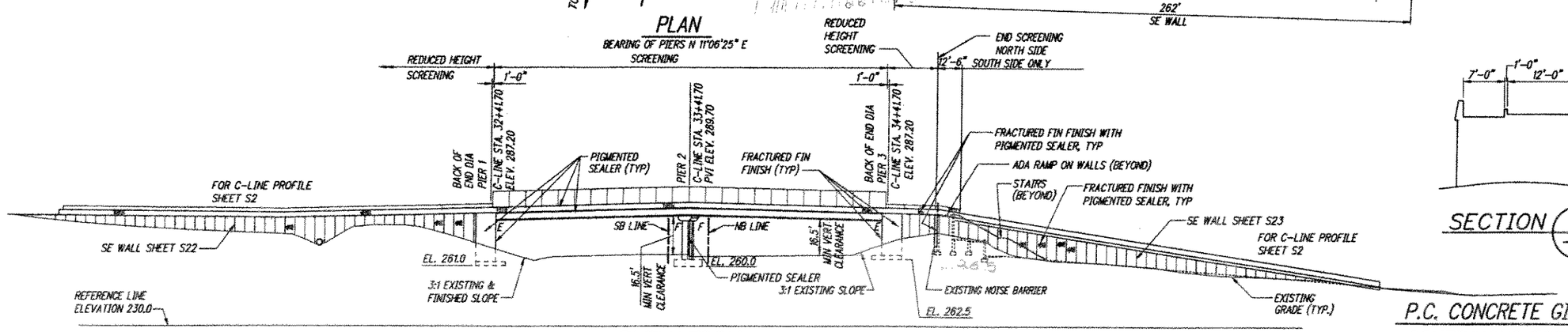

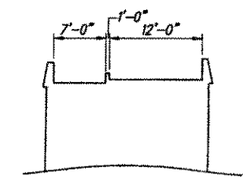

SECTION 1

P.C. CONCRETE GIRDERS (W42G)
CONTINUOUS FOR LIVE LOAD
LOADING : HS-20 OR 85 psf

kpff Consulting Engineers
1201 Third Avenue, Suite 900
Seattle, Washington 98101
(206) 622-5822 Fax (206) 622-8130

CALL 48 HOURS BEFORE YOU DIG 1-800-424-5555

FILE	ENGR.	REVIEW	SCALE	DATE
	JEM	IH	1"=30'	

NO.	REVISION	BY	REVIEW	DATE

CITY OF KIRKLAND WASHINGTON

CITY OF KIRKLAND
PUBLIC WORKS DEPARTMENT
123 FIFTH AVENUE – KIRKLAND, WA 98033-6189 – (425) 828-1243

N.E. 100TH STREET BRIDGE
LAYOUT

SHEET
S1

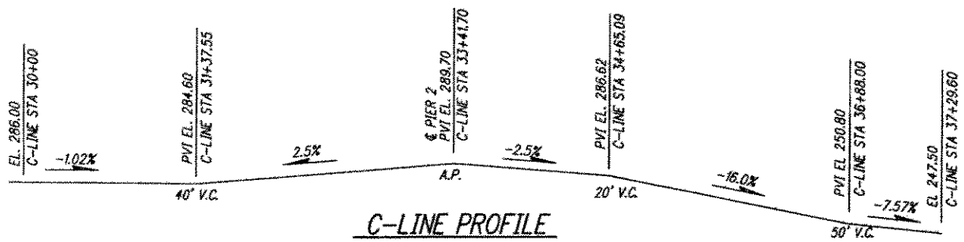

C-LINE PROFILE

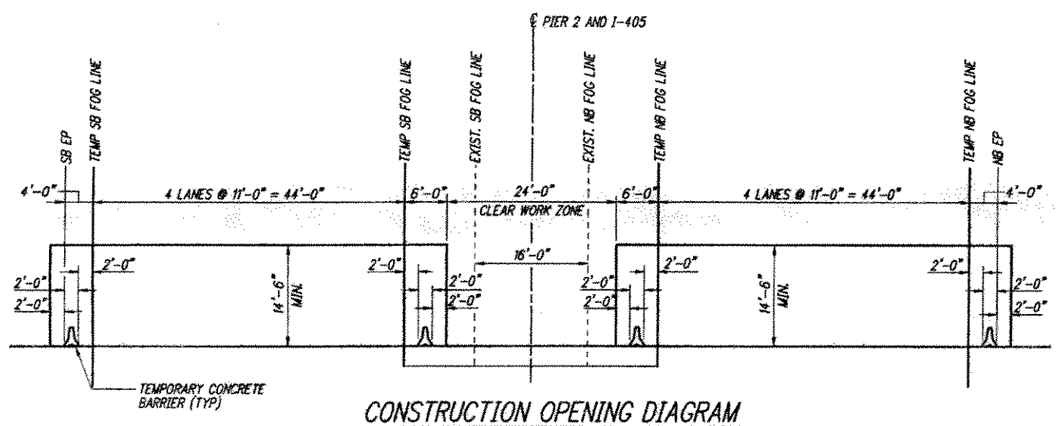

CONSTRUCTION OPENING DIAGRAM

GENERAL NOTES

1. ALL MATERIAL AND WORKMANSHIP SHALL BE IN ACCORDANCE WITH THE REQUIREMENTS OF THE WASHINGTON STATE DEPARTMENT OF TRANSPORTATION STANDARD SPECIFICATIONS FOR ROAD, BRIDGE AND MUNICIPAL CONSTRUCTION – ENGLISH, DATED 2000 AND AMENDMENTS.

2. THE STRUCTURE HAS BEEN DESIGNED IN ACCORDANCE WITH THE REQUIREMENTS OF THE AASHTO STANDARD SPECIFICATIONS FOR HIGHWAY BRIDGES SIXTEENTH EDITION – 1996 AND INTERIMS THROUGH 1999.
ALL PRESTRESSED CONCRETE ELEMENTS HAVE BEEN DESIGNED FOR SERVICE LOAD STRESSES AND CHECKED FOR THE REQUIREMENTS OF LOAD FACTOR DESIGN. ALL OTHER STRUCTURAL ELEMENTS ARE DESIGNED IN ACCORDANCE WITH THE REQUIREMENTS FOR LOAD FACTOR DESIGN. SEISMIC DESIGN OF THE STRUCTURE HAS BEEN DONE USING AN ACCELERATION COEFFICIENT OF 0.31.

3. THE CONCRETE IN THE ROADWAY DECK SHALL BE CLASS 4000D. ALL OTHER CAST-IN-PLACE CONCRETE SHALL BE CLASS 4000.

4. THE MAXIMUM DESIGN SOIL PRESSURE PER SQUARE FOOT IS 4 TONS AT PIERS 1, 2 AND 3. A FACTOR OF SAFETY OF 2.5 WAS USED IN DETERMINING THE ALLOWABLE SERVICE LOADS.

5. FALSEWORK SHALL BE CAREFULLY RELEASED TO PREVENT IMPACT OR UNDUE STRESS IN THE STRUCTURE.

6. UNLESS OTHERWISE SHOWN ON THE PLANS, THE CONCRETE COVER MEASURED FROM THE FACE OF THE CONCRETE TO THE FACE OF ANY REINFORCING BAR SHALL BE TWO AND ONE HALF INCHES ON THE TOP OF THE ROADWAY SLAB, THREE INCHES AT THE BOTTOM OF FOOTINGS, TWO INCHES AT THE TOP OF FOOTINGS, ONE INCH AT THE BOTTOM OF THE ROADWAY SLAB AND ONE AND ONE HALF INCHES AT ALL OTHER LOCATIONS UNLESS OTHERWISE NOTED.

LEGEND

- A/20 — IDENTIFIES SECTION, VIEW OR DETAIL
- TAKEN OR SHOWN ON BRIDGE SHEET NO.
- A/— — TAKEN OR SHOWN ON THE SAME SHEET
- TEST HOLE LOCATION
- E — DENOTES EPOXY COATED REINF.
- PIEZICONE PROBE

kpff Consulting Engineers
1201 Third Avenue, Suite 900
Seattle, Washington 98101
(206) 622-5822 Fax (206) 622-8130

CALL 48 HOURS BEFORE YOU DIG 1-800-424-5555

RICHARD F. JOHNSON — STATE OF WASHINGTON — 24617 — REGISTERED PROFESSIONAL ENGINEER
EXPIRES 9/10/

FILE	ENGR.	REVIEW	SCALE	DATE
	JEM	IH	NONE	

NO.	REVISION	BY	REVIEW	DATE

CITY OF KIRKLAND WASHINGTON

CITY OF KIRKLAND
PUBLIC WORKS DEPARTMENT
123 FIFTH AVENUE – KIRKLAND, WA 98033-6189 – (425) 828-1243

N.E. 100TH STREET BRIDGE

GENERAL NOTES AND DATA

SHEET S2

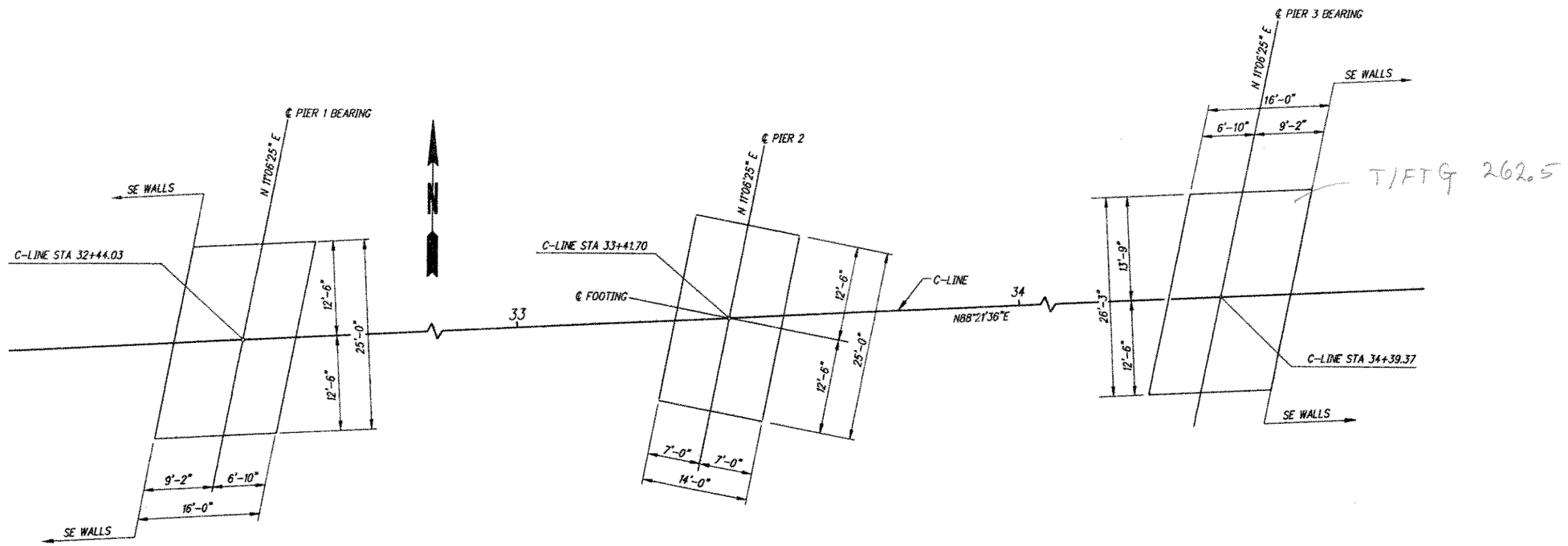

FOUNDATION LAYOUT PLAN

kpff Consulting Engineers
1201 Third Avenue, Suite 900
Seattle, Washington 98101
(206) 622-5822 Fax (206) 622-8130

CALL 48 HOURS BEFORE YOU DIG 1-800-424-5555

FILE	ENGR.	REVIEW	SCALE	DATE
	JEM	iH	SHOWN	

NO.	REVISION	BY	REVIEW	DATE

CITY OF KIRKLAND WASHINGTON

CITY OF KIRKLAND
PUBLIC WORKS DEPARTMENT
123 FIFTH AVENUE – KIRKLAND, WA 98033-6189 – (425) 828-1243

N.E. 100TH STREET BRIDGE

FOUNDATION LAYOUT PLAN

SHEET S3

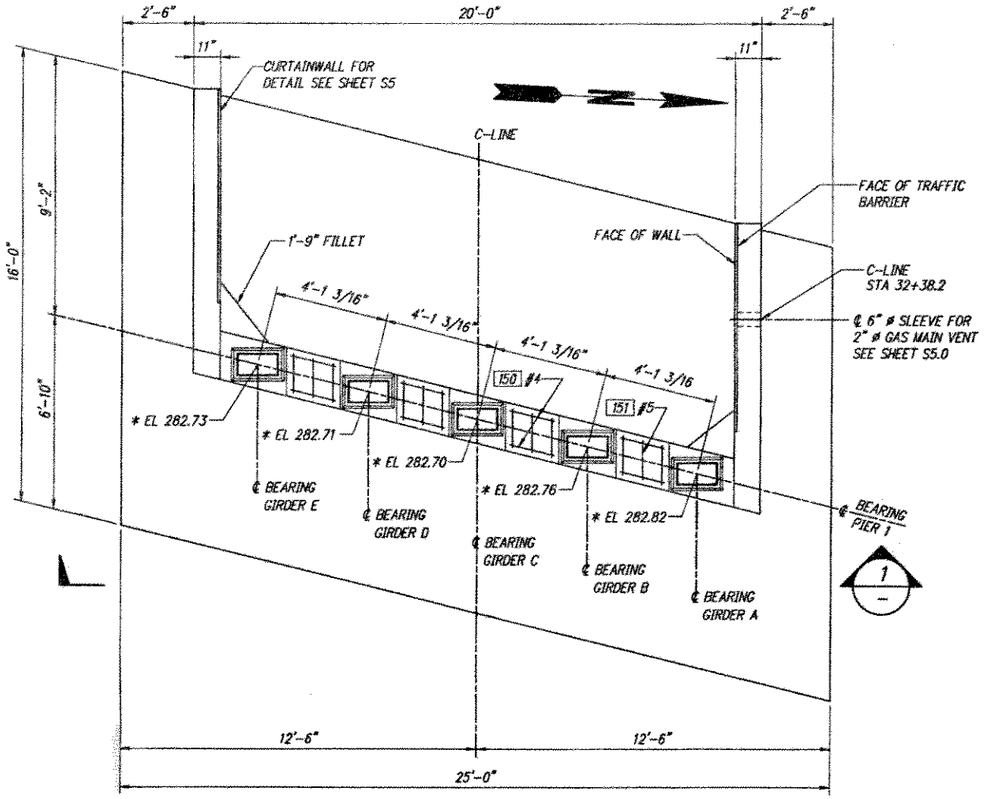

PIER 1 – PLAN

* ELEVATIONS SHOWN ARE AT TOP OF GROUT PAD @ ℄ OF BEARING

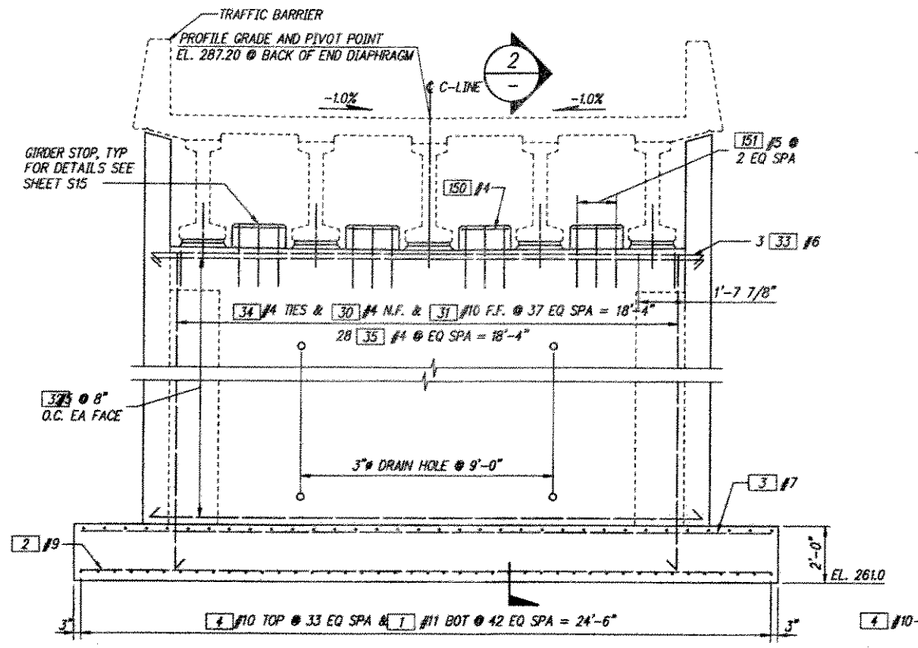

PIER 1 – ELEVATION 1

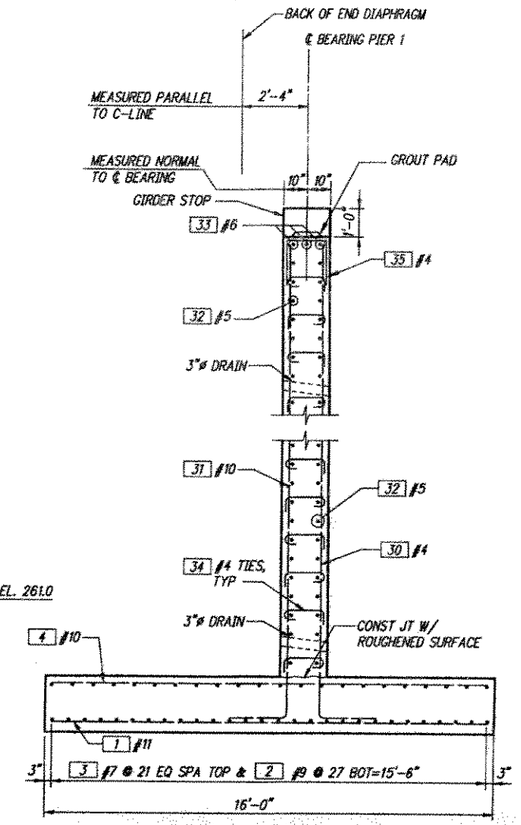

SECTION 2

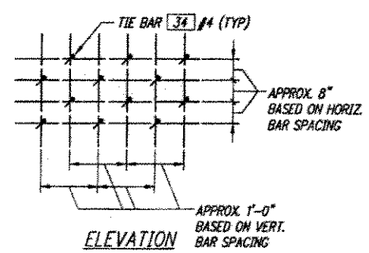

ELEVATION

TIE SPACING DETAIL

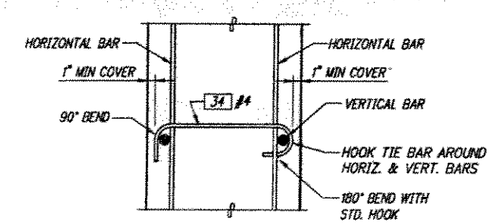

SECTION

TIE BAR DETAIL

ALTERNATE HOOKS ON TIE BAR (HORIZ. & VERT.)

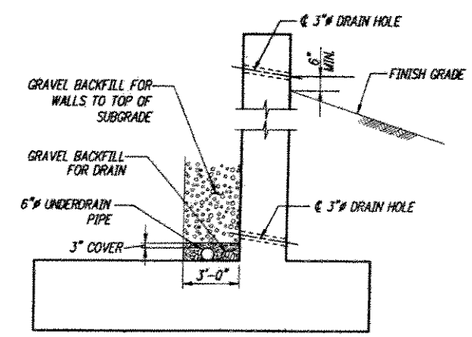

DRAINAGE DETAIL

kpff Consulting Engineers
1201 Third Avenue, Suite 900
Seattle, Washington 98101
(206) 622-5822 Fax (206) 622-8130

CALL 48 HOURS BEFORE YOU DIG 1-800-424-5555

RICHARD K. JOHNSON STATE OF WASHINGTON 24026 REGISTERED PROFESSIONAL ENGINEER EXPIRES 9/10/07

FILE	ENGR.	REVIEW	SCALE	DATE
	JEM	IH	SHOWN	

NO.	REVISION	BY	REVIEW	DATE

CITY OF KIRKLAND WASHINGTON

CITY OF KIRKLAND
PUBLIC WORKS DEPARTMENT
123 FIFTH AVENUE – KIRKLAND, WA 98033-6189 – (425) 828-1243

N.E. 100TH STREET BRIDGE

PIER 1 ABUTMENT SECTIONS AND DETAILS

SHEET S4

CURTAIN WALL LOCATION	ELEVATION POINT					
	A	B	C	D	E	F
PIER 1 NORTH	287.17	287.34	286.86	286.88	263.0	261.0
PIER 1 SOUTH	287.07	287.24	286.74	286.76	263.0	261.0

CURTAIN WALL ELEVATIONS

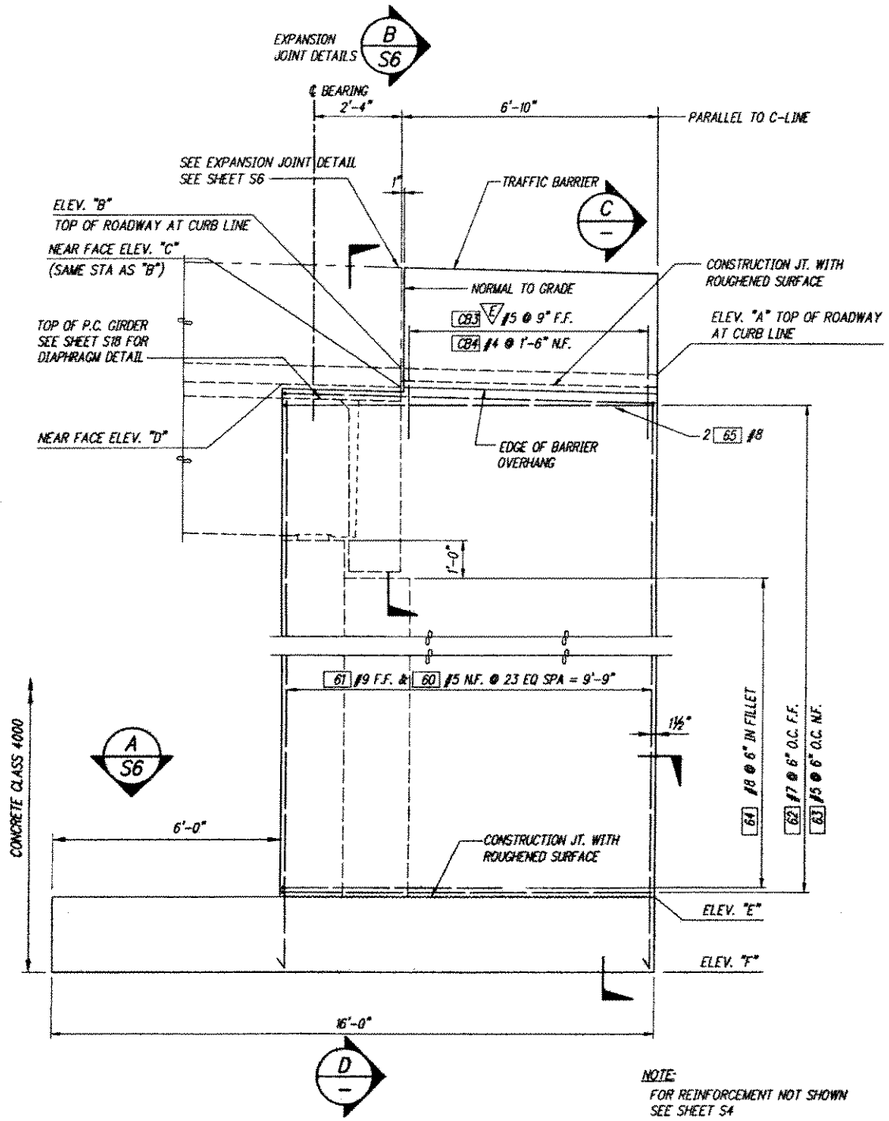

NOTE:
FOR REINFORCEMENT NOT SHOWN SEE SHEET S4

PIER 1 CURTAIN WALL – OUTSIDE ELEVATION

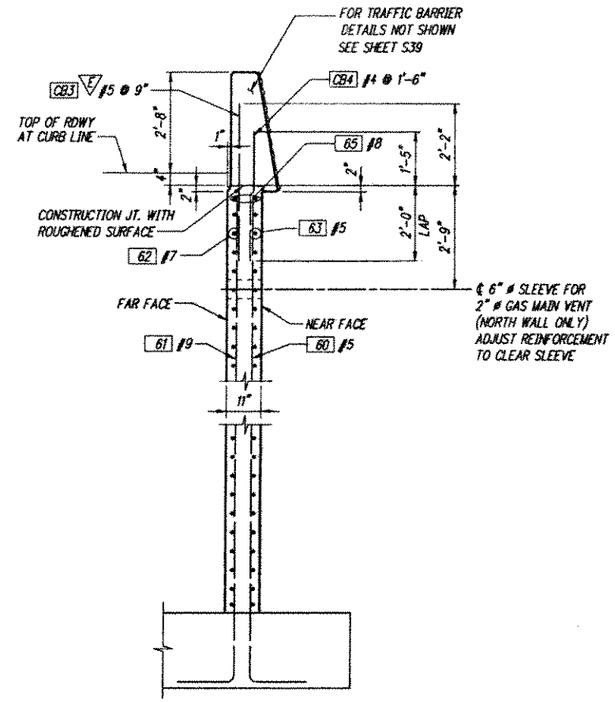

SECTION C

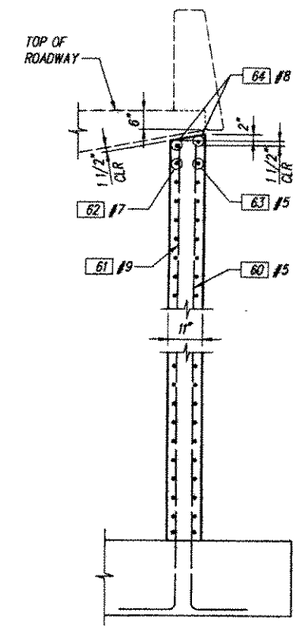

SECTION D

kpff Consulting Engineers
1201 Third Avenue, Suite 900
Seattle, Washington 98101
(206) 622-5822 Fax (206) 622-8130

CALL 48 HOURS BEFORE YOU DIG 1-800-424-5555

RICHARD K. JOHNSON STATE OF WASHINGTON 24819 REGISTERED PROFESSIONAL ENGINEER
EXPIRES 6/30/11

FILE	ENGR.	REVIEW	SCALE	DATE
	JEM	IH	SHOWN	

NO.	REVISION	BY	REVIEW	DATE

CITY OF KIRKLAND WASHINGTON

CITY OF KIRKLAND
PUBLIC WORKS DEPARTMENT
123 FIFTH AVENUE – KIRKLAND, WA 98033-6189 – (425) 828-1243

N.E. 100TH STREET BRIDGE
PIER 1 CURTAIN WALLS

SHEET
S5

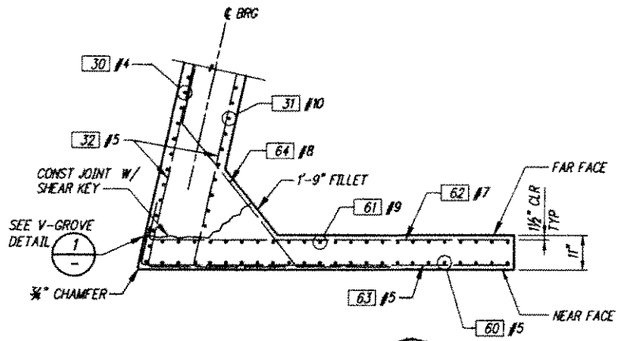

SECTION A S5, S11

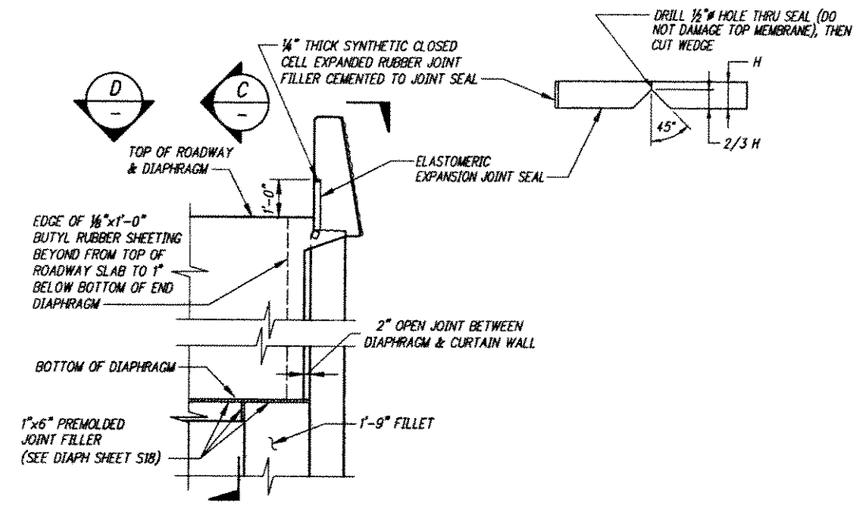

SECTION B S5, S11

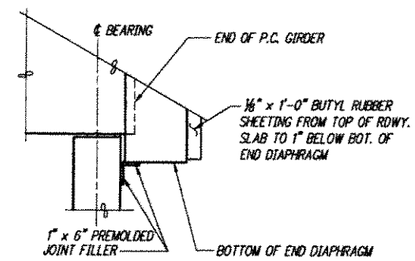

SECTION C

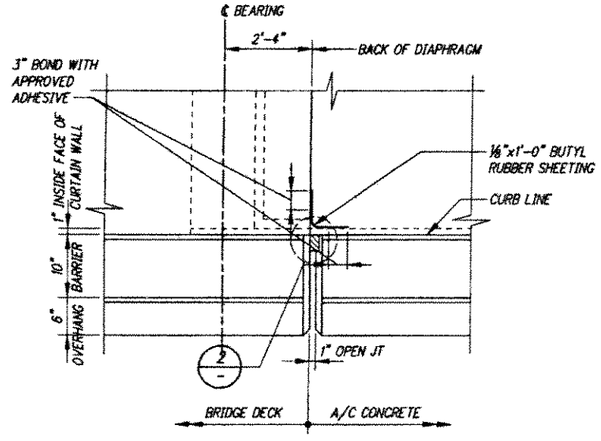

SECTION D

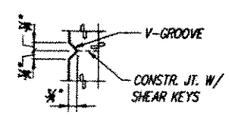

V-GROOVE DETAIL 1

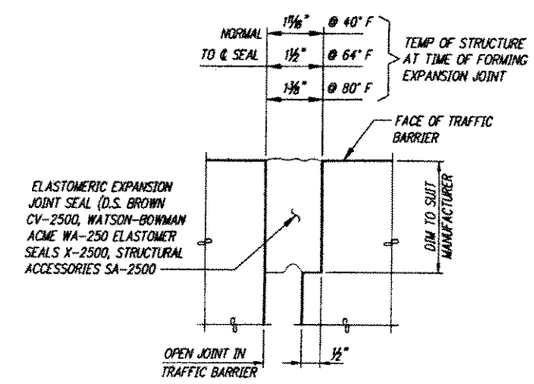

DETAIL 2

kpff Consulting Engineers
1201 Third Avenue, Suite 900
Seattle, Washington 98101
(206) 622-5822 Fax (206) 622-8130

CALL 48 HOURS BEFORE YOU DIG 1-800-424-5555

RICHARD K. JOHNSON STATE OF WASHINGTON 24027 REGISTERED PROFESSIONAL ENGINEER
EXPIRES 9/10/07

FILE	ENGR.	REVIEW	SCALE	DATE
	JEM	IH	SHOWN	

NO.	REVISION	BY	REVIEW	DATE

CITY OF KIRKLAND WASHINGTON

CITY OF KIRKLAND
PUBLIC WORKS DEPARTMENT
123 FIFTH AVENUE – KIRKLAND, WA 98033-6189 – (425) 828-1243

N.E. 100TH STREET BRIDGE

BRIDGE PIER DETAILS

SHEET S6

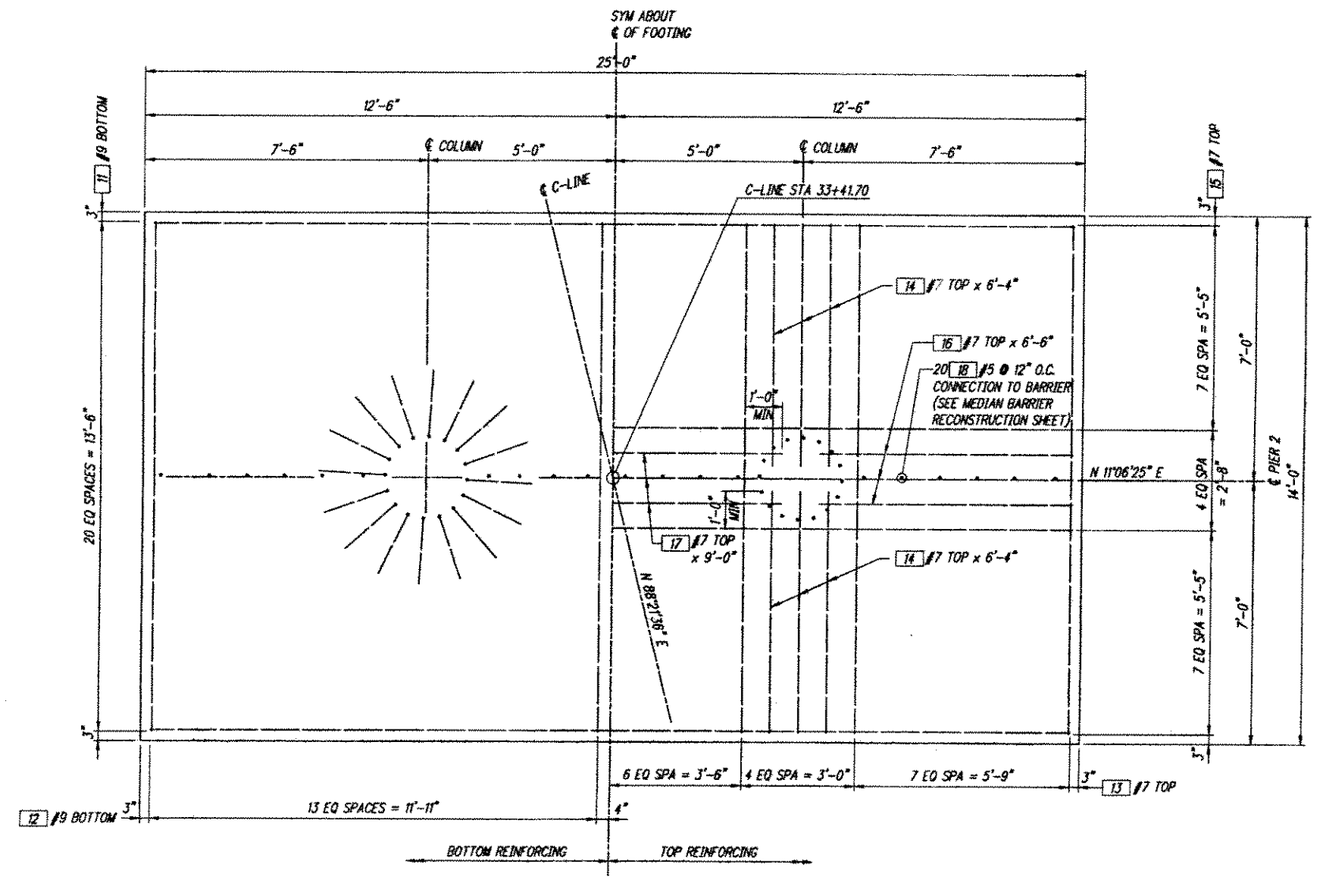

PLAN – PIER 2 FOUNDATION

kpff Consulting Engineers
1201 Third Avenue, Suite 900
Seattle, Washington 98101
(206) 622-5822 Fax (206) 622-8130

CALL 48 HOURS
BEFORE YOU DIG
1-800-424-5555

RICHARD K. JOHNSON
STATE OF WASHINGTON
EXPIRES 9/10/07

FILE	ENGR.	REVIEW	SCALE	DATE
	JEM	IH	SHOWN	

NO.	REVISION	BY	REVIEW	DATE

CITY OF KIRKLAND WASHINGTON

CITY OF KIRKLAND
PUBLIC WORKS DEPARTMENT
123 FIFTH AVENUE – KIRKLAND, WA 98033-6189 – (425) 828-1243

N.E. 100TH STREET BRIDGE

PIER 2 FOUNDATION PLAN

SHEET
S7

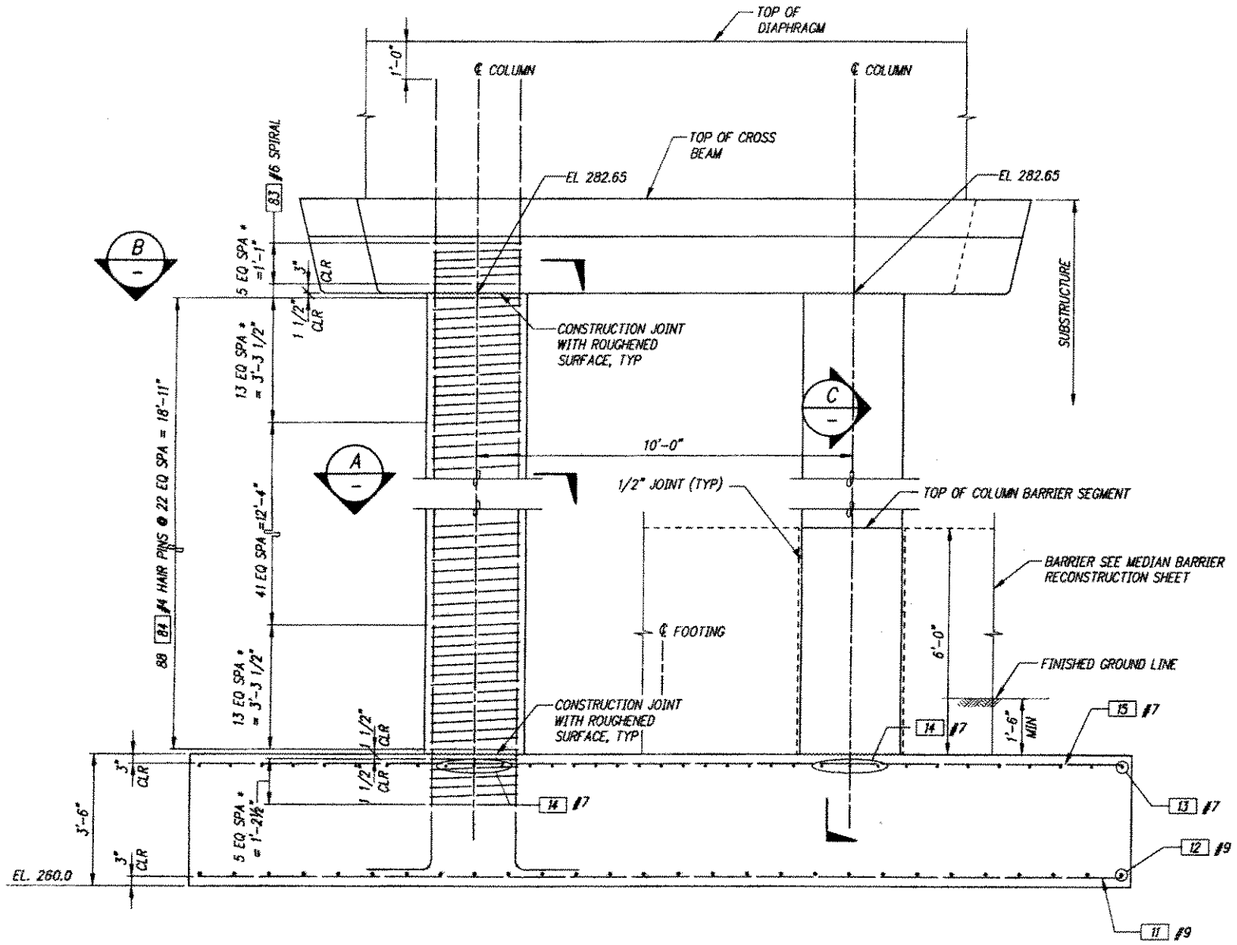

* WELDED SPLICES ONLY

ELEVATION – PIER 2

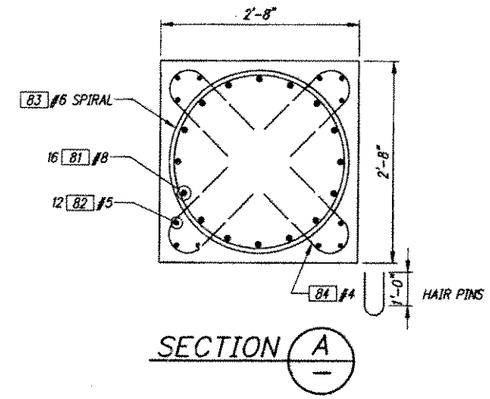

SECTION A

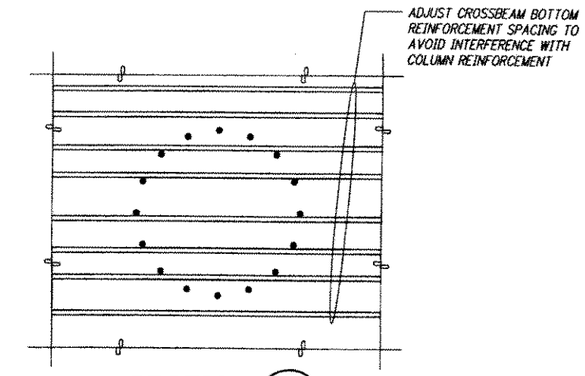

SECTION B

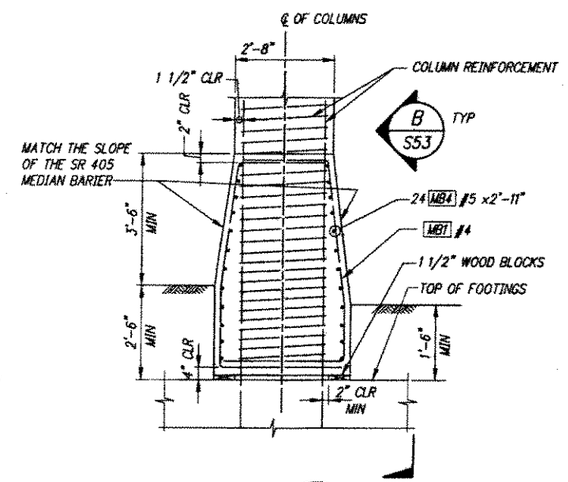

SECTION C ,S53

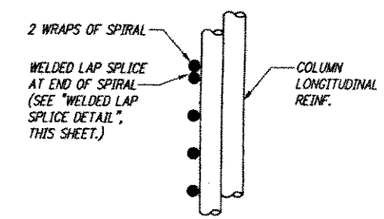

SPIRAL TERMINATION DETAIL

TYPICAL AT ALL DISCONTINUOUS ENDS OF SPIRALS

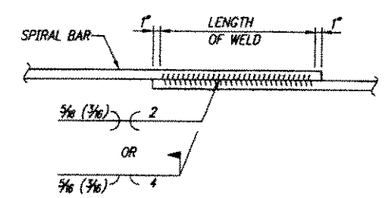

WELDED LAP SPLICE DETAIL

FOR SPIRAL TERMINUS OR BREAK IN SPIRAL WELD SPIRAL BACK ONTO SELF

kpff Consulting Engineers
1201 Third Avenue, Suite 900
Seattle, Washington 98101
(206) 622-5822 Fax (206) 622-8130

CALL 48 HOURS BEFORE YOU DIG 1-800-424-5555

RICHARD K. JOHNSON STATE OF WASHINGTON 24627 REGISTERED PROFESSIONAL ENGINEER
EXPIRES 9/10/07

FILE	ENGR.	REVIEW	SCALE	DATE
	JEM	IH	SHOWN	

NO.	REVISION	BY	REVIEW	DATE

CITY OF KIRKLAND WASHINGTON

CITY OF KIRKLAND
PUBLIC WORKS DEPARTMENT
123 FIFTH AVENUE – KIRKLAND, WA 98033-6189 – (425) 828-1243

N.E. 100TH STREET BRIDGE

PIER 2 ELEVATION & SECTIONS

SHEET S8

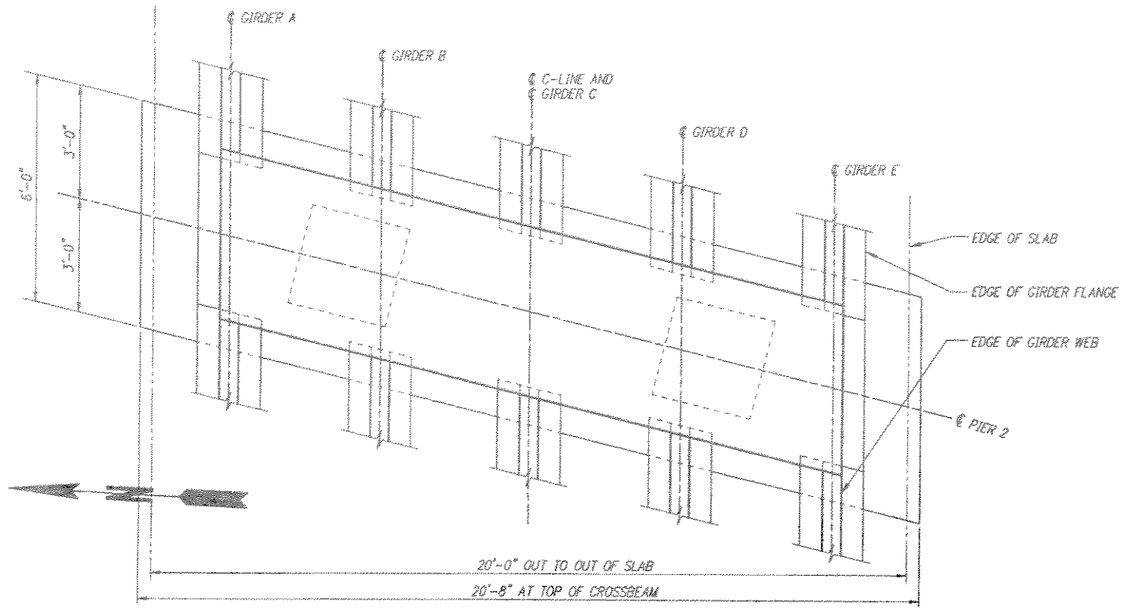

PLAN – PIER 2

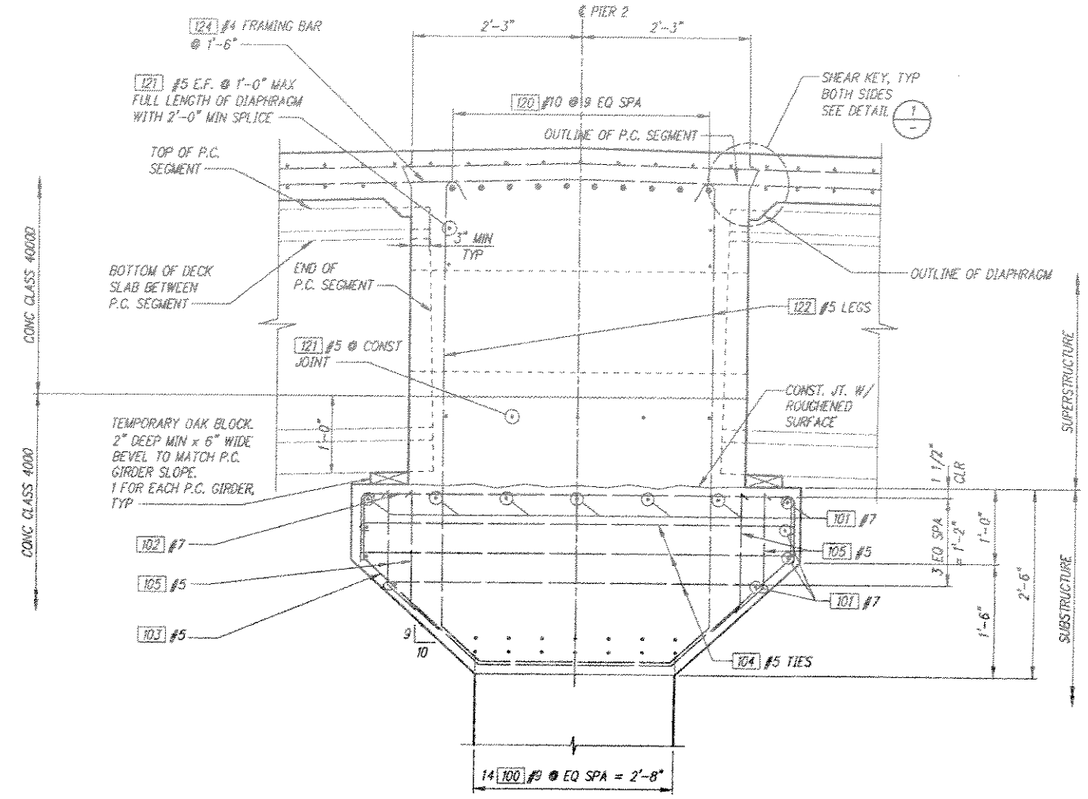

SECTION B/--

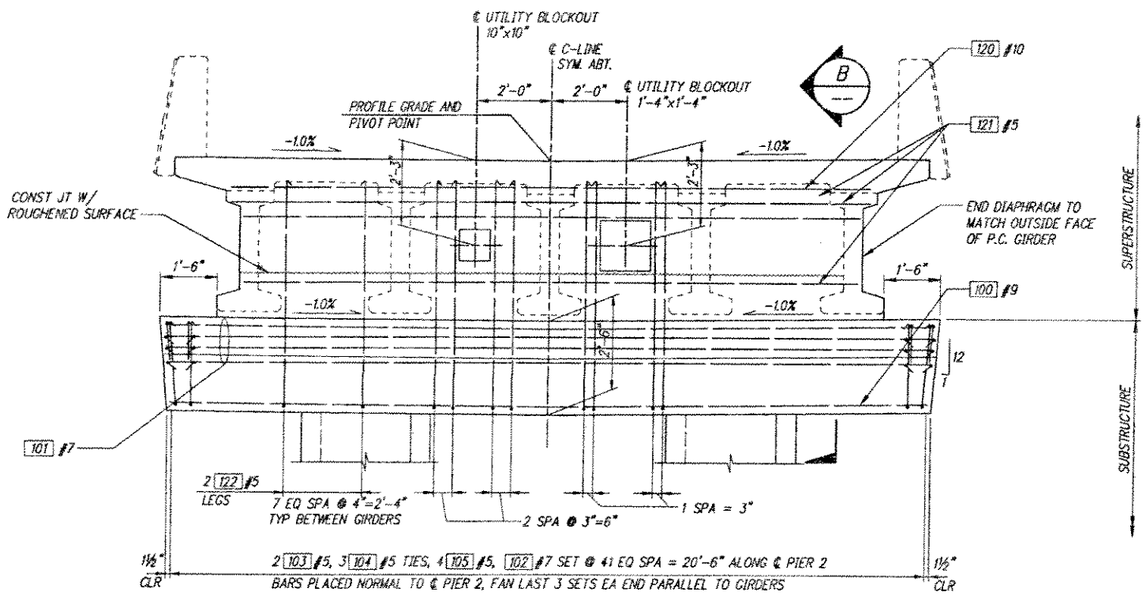

ELEVATION – PIER 2 CROSSBEAM

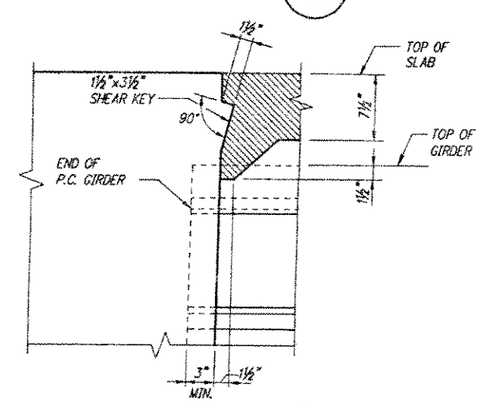

DETAIL 1/--

kpff Consulting Engineers
1201 Third Avenue, Suite 900
Seattle, Washington 98101
(206) 622-5822 Fax (206) 622-8130

CALL 48 HOURS BEFORE YOU DIG 1-800-424-5555

RICHARD R. JOHNSON STATE OF WASHINGTON 24874 REGISTERED PROFESSIONAL ENGINEER
EXPIRES 9/19/02

FILE	ENGR.	REVIEW	SCALE	DATE
	JEM	IH	SHOWN	

NO.	REVISION	BY	REVIEW	DATE

CITY OF KIRKLAND WASHINGTON

CITY OF KIRKLAND
PUBLIC WORKS DEPARTMENT
123 FIFTH AVENUE – KIRKLAND, WA 98033-6189 – (425) 828-1243

N.E. 100TH STREET BRIDGE
PIER 2 CROSSBEAM &
CENTER DIAPHRAGM

SHEET
S9

XREFS: LEBOURN, JOHNSON, 100XTB,

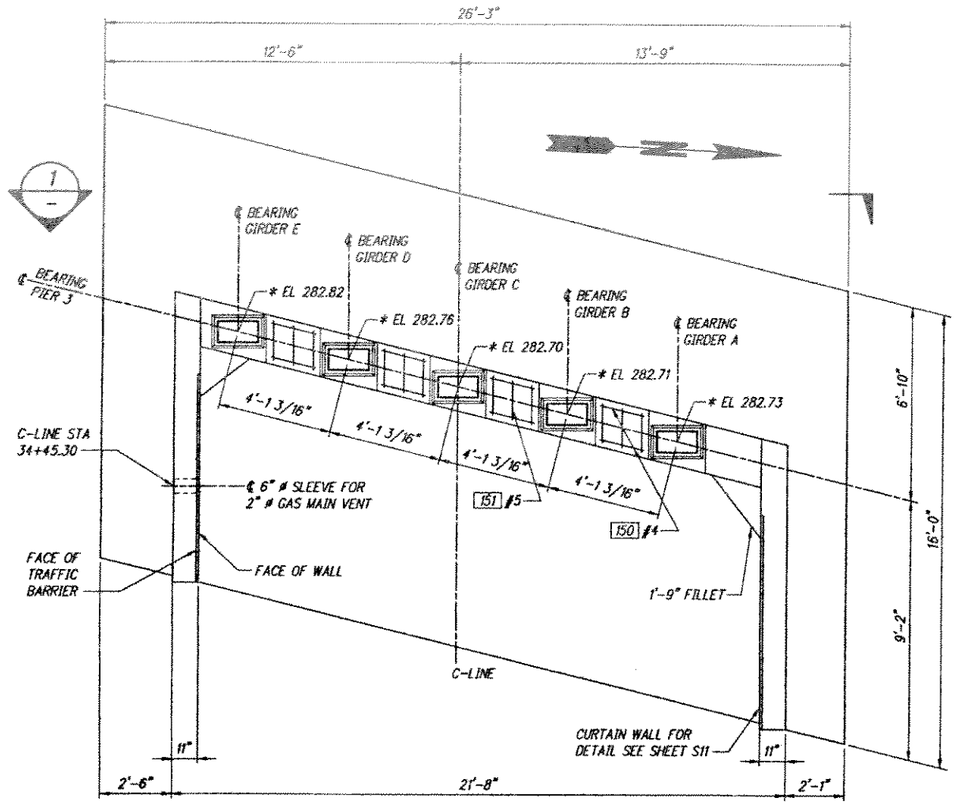

PIER 3 – PLAN

* ELEVATIONS SHOWN ARE AT TOP OF GROUT PAD @ ℄ OF BEARING

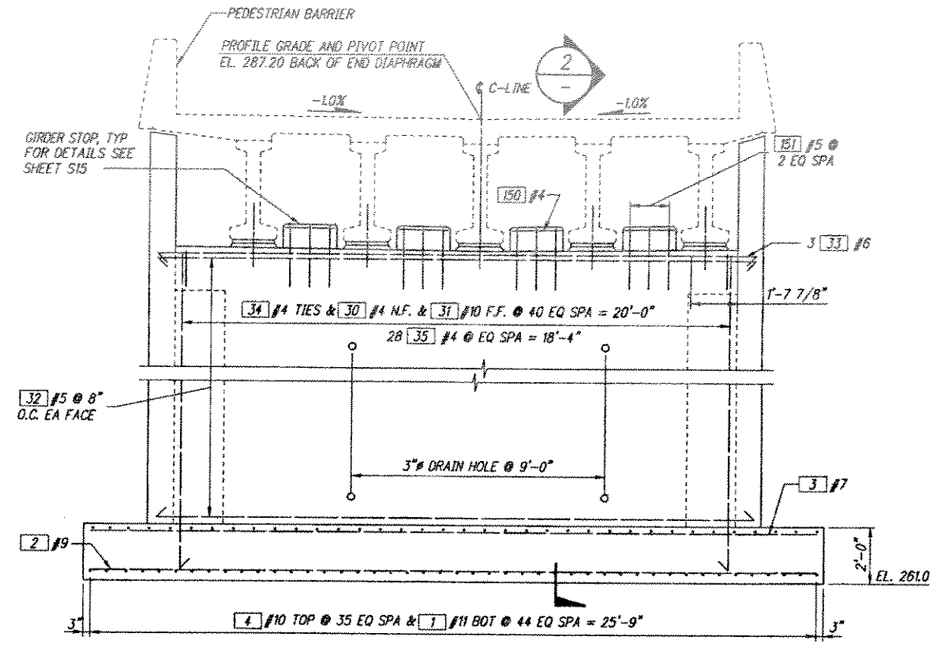

PIER 3 – ELEVATION 1

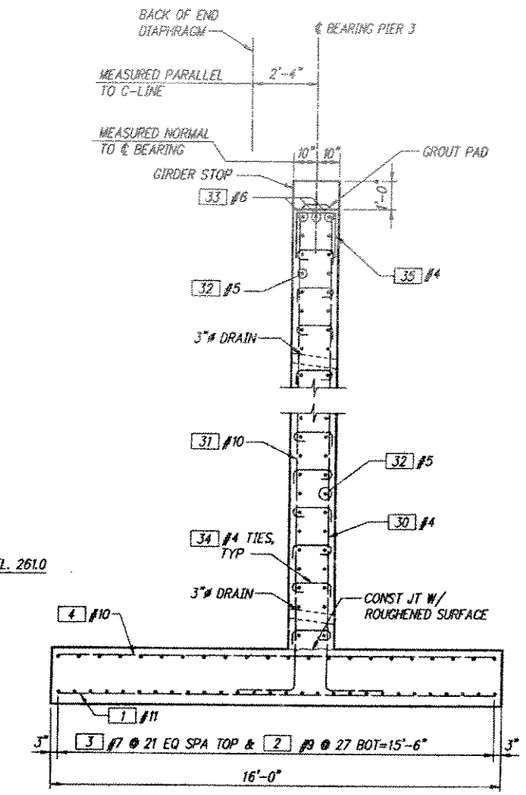

SECTION 2

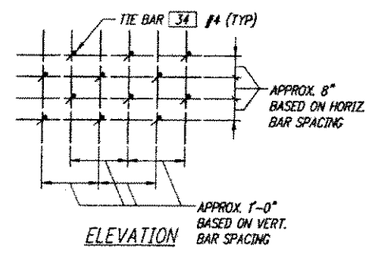

TIE SPACING DETAIL

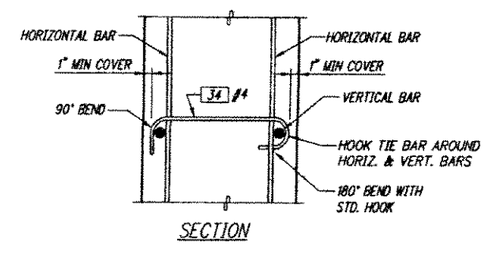

TIE BAR DETAIL

ALTERNATE HOOKS ON TIE BAR (HORIZ. & VERT.)

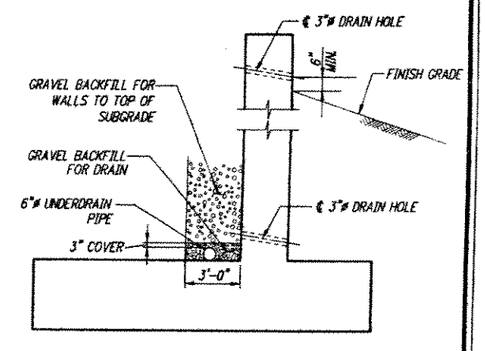

DRAINAGE DETAIL

kpff Consulting Engineers
1201 Third Avenue, Suite 900
Seattle, Washington 98101
(206) 622-5822 Fax (206) 622-8130

CALL 48 HOURS BEFORE YOU DIG 1-800-424-5555

FILE	ENGR.	REVIEW	SCALE	DATE
	JEM	IH	SHOWN	

NO.	REVISION	BY	REVIEW	DATE

CITY OF KIRKLAND WASHINGTON

CITY OF KIRKLAND
PUBLIC WORKS DEPARTMENT
123 FIFTH AVENUE – KIRKLAND, WA 98033-6189 – (425) 828-1243

N.E. 100TH STREET BRIDGE

PIER 3 ABUTMENT SECTIONS AND DETAILS

SHEET S10

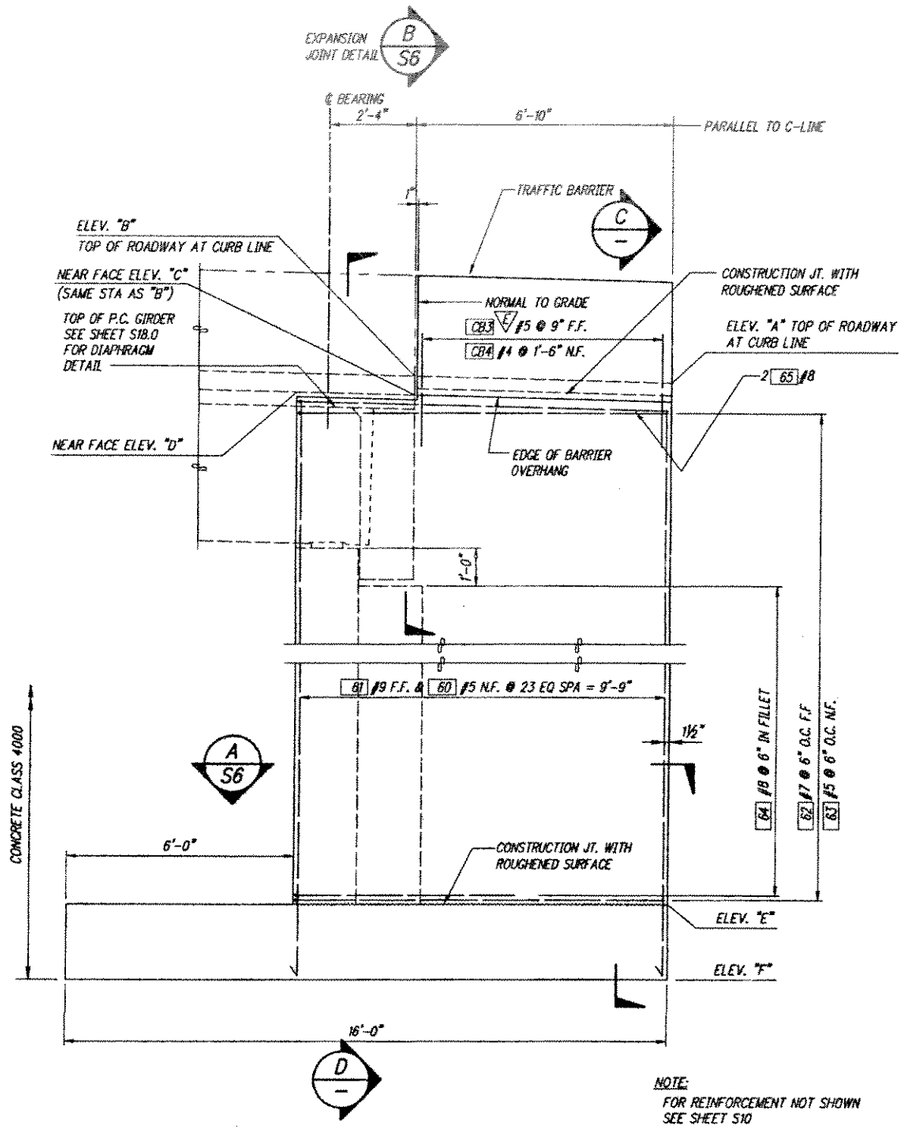

NOTE:
FOR REINFORCEMENT NOT SHOWN SEE SHEET S10

PIER 3 CURTAIN WALL - OUTSIDE ELEVATION

CURTAIN WALL LOCATION	ELEVATION POINT					
	A	B	C	D	E	F
PIER 3 NORTH	287.08	287.25	286.75	286.77	264.5	262.5
PIER 3 SOUTH	287.17	287.34	286.86	286.88	264.5	262.5

CURTAIN WALL ELEVATIONS

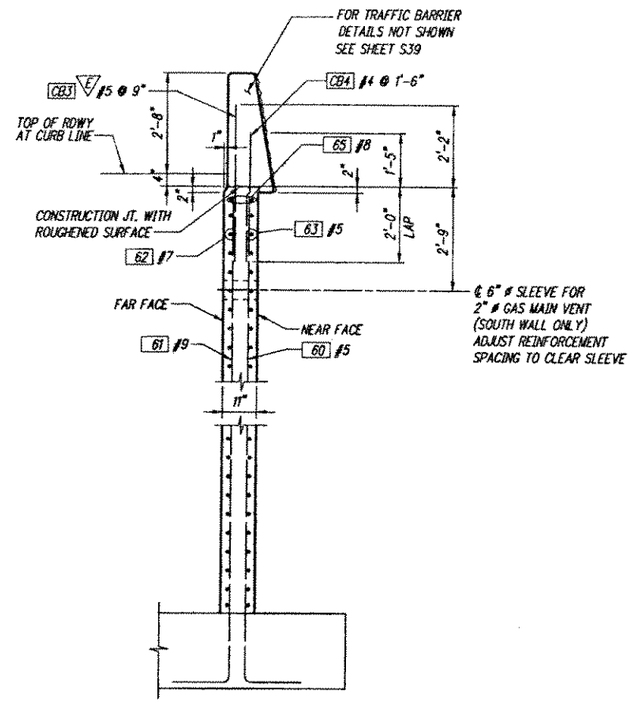

SECTION C

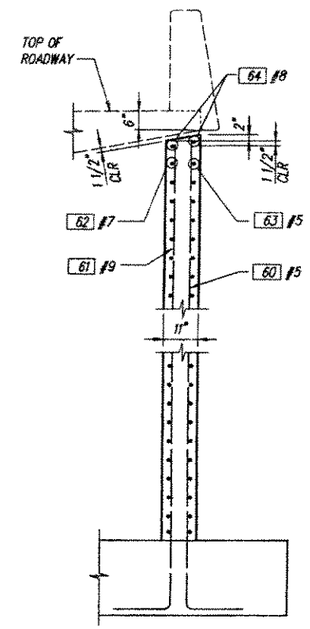

SECTION D

kpff Consulting Engineers
1201 Third Avenue, Suite 900
Seattle, Washington 98101
(206) 622-5822 Fax (206) 622-8130

CALL 48 HOURS BEFORE YOU DIG 1-800-424-5555

RICHARD K. JOHNSON STATE OF WASHINGTON 24871 REGISTERED PROFESSIONAL ENGINEER
EXPIRES 9/10/07

FILE	ENGR.	REVIEW	SCALE	DATE
	JEM	IH	SHOWN	

NO.	REVISION	BY	REVIEW	DATE

CITY OF KIRKLAND WASHINGTON

CITY OF KIRKLAND
PUBLIC WORKS DEPARTMENT
123 FIFTH AVENUE - KIRKLAND, WA 98033-6189 - (425) 828-1243

N.E. 100TH STREET BRIDGE
PIER 3 CURTAIN WALLS

SHEET S11

KREFS: LEIMKUHL, JOHNSON, 100XTB,

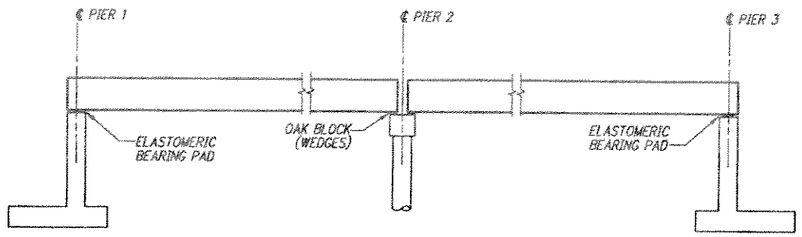

STAGE 1 – SET P.C. GIRDERS IN PLACE

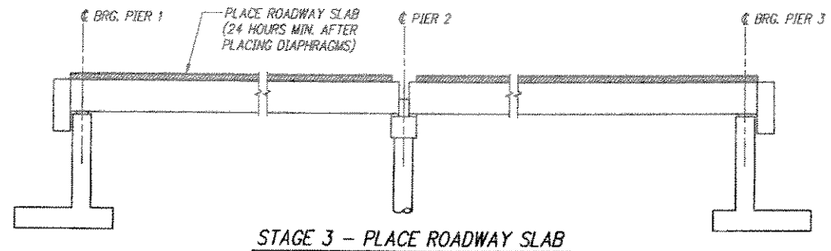

STAGE 3 – PLACE ROADWAY SLAB

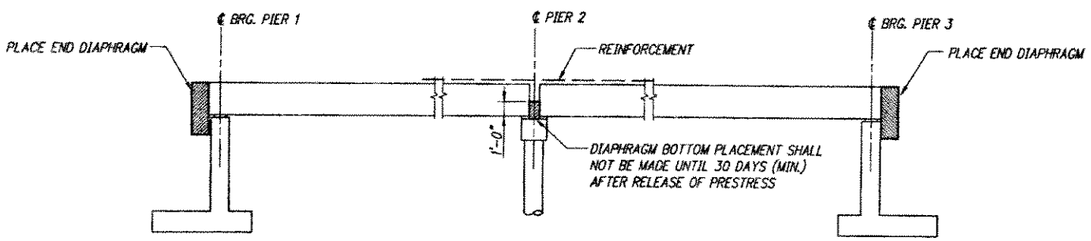

STAGE 2 – PLACE DIAPHRAGM AND PLACE REINFORCEMENT

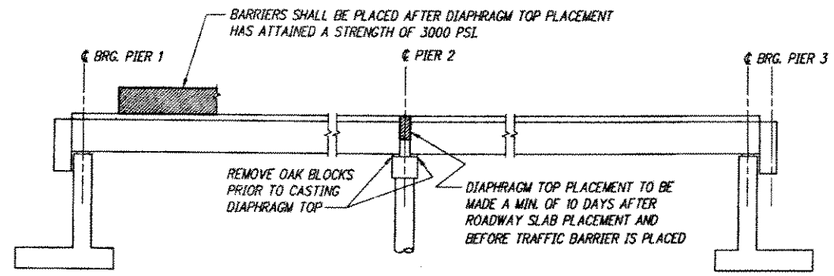

STAGE 4
PLACE UPPER HINGE DIAPHRAGMS PIERS AND BARRIERS

CONSTRUCTION SEQUENCE

kpff Consulting Engineers
1201 Third Avenue, Suite 900
Seattle, Washington 98101
(206) 622-5822 Fax (206) 622-8130

CALL 48 HOURS BEFORE YOU DIG 1-800-424-5555

RICHARD K. JOHNSON STATE OF WASHINGTON 24819 REGISTERED PROFESSIONAL ENGINEER
EXPIRES 9/10/07

FILE	ENGR.	REVIEW	SCALE	DATE
	JEM	IH	NONE	

NO.	REVISION	BY	REVIEW	DATE

CITY OF KIRKLAND WASHINGTON

CITY OF KIRKLAND
PUBLIC WORKS DEPARTMENT
123 FIFTH AVENUE – KIRKLAND, WA 98033-6189 – (425) 828-1243

N.E. 100TH STREET BRIDGE
CONSTRUCTION SEQUENCE

SHEET
S12

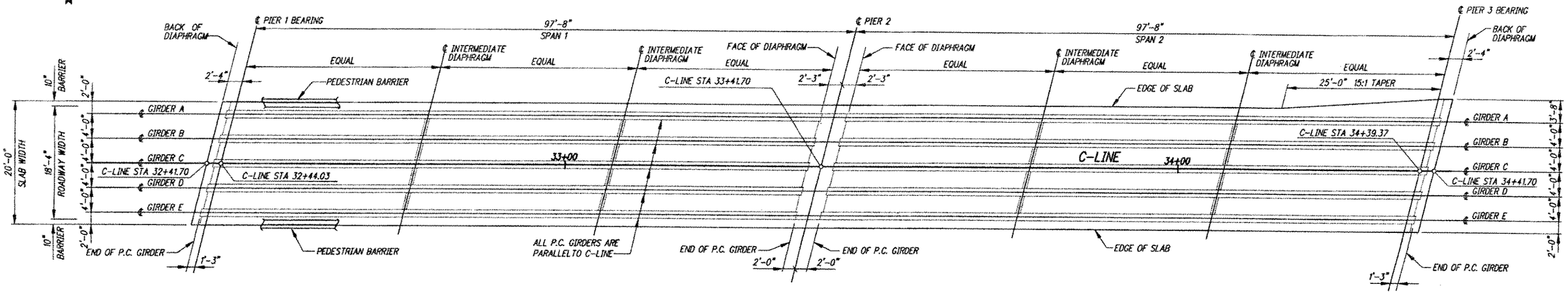

FRAMING PLAN – SPANS 1 AND 2

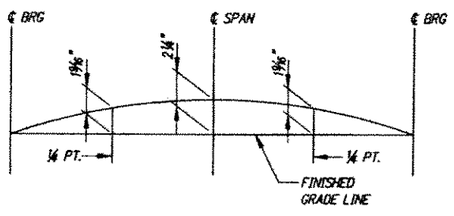

SCREED SETTING DIMENSIONS

kpff Consulting Engineers
1201 Third Avenue, Suite 900
Seattle, Washington 98101
(206) 622-5822 Fax (206) 622-8130

CALL 48 HOURS BEFORE YOU DIG 1-800-424-5555

RICHARD K. JOHNSON STATE OF WASHINGTON 24617 REGISTERED PROFESSIONAL ENGINEER
EXPIRES 9/10/07

FILE	ENGR.	REVIEW	SCALE	DATE
	JEM	IH	SHOWN	

NO.	REVISION	BY	REVIEW	DATE

CITY OF KIRKLAND WASHINGTON

CITY OF KIRKLAND
PUBLIC WORKS DEPARTMENT
123 FIFTH AVENUE – KIRKLAND, WA 98033-6189 – (425) 828-1243

N.E. 100TH STREET BRIDGE

BRIDGE SUPER STRUCTURE FRAMING PLAN

SHEET S13

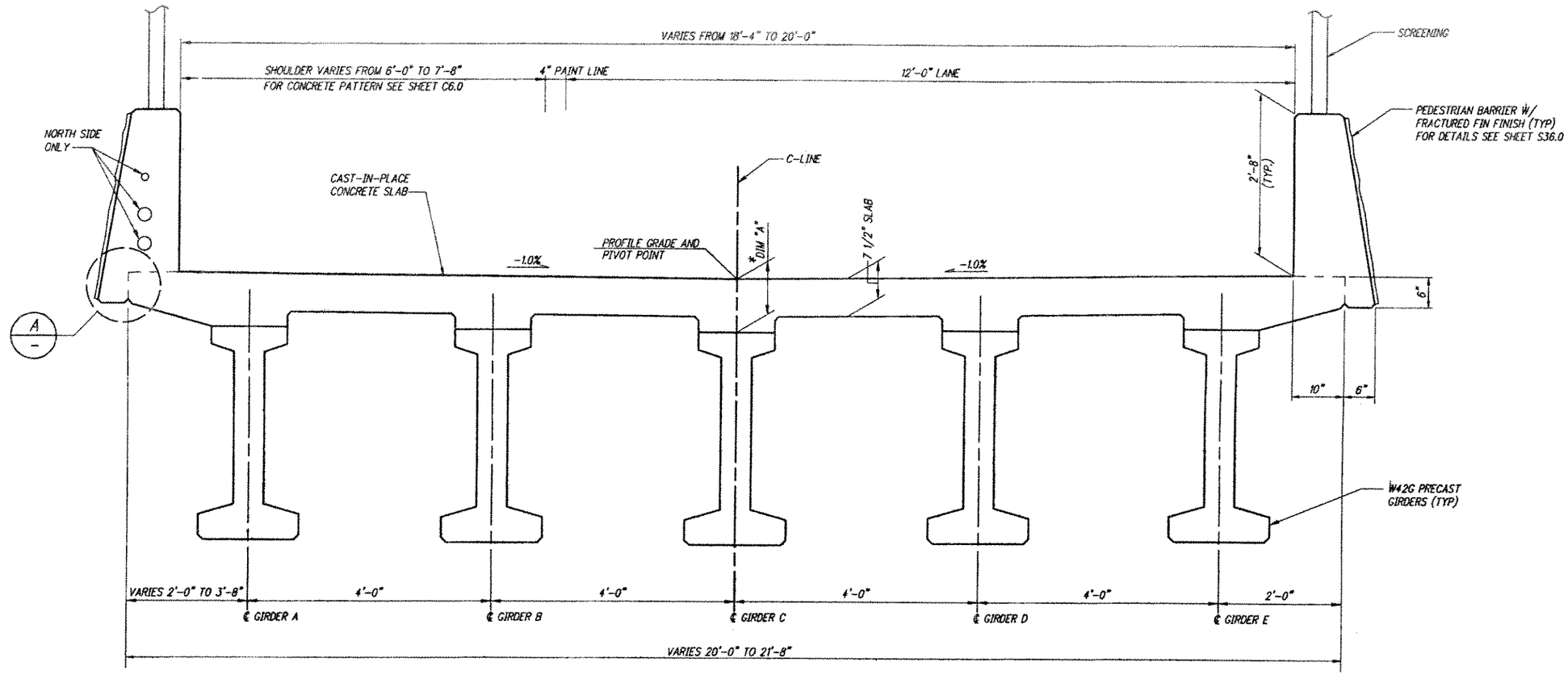

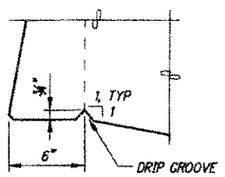

DRIP GROOVE DETAIL (A / -)

* FOR DIMENSION "A" SEE SHEET S17.0.

TYPICAL SECTION

kpff Consulting Engineers
1201 Third Avenue, Suite 900
Seattle, Washington 98101
(206) 622-5822 Fax (206) 622-8130

CALL 48 HOURS
BEFORE YOU DIG
1-800-424-5555

RICHARD K. JOHNSON
STATE OF WASHINGTON
24824
REGISTERED
PROFESSIONAL ENGINEER
EXPIRES 9/10/01

FILE	ENGR.	REVIEW	SCALE	DATE
	JEM	IH	SHOWN	

NO.	REVISION	BY	REVIEW	DATE

CITY OF KIRKLAND WASHINGTON

CITY OF KIRKLAND
PUBLIC WORKS DEPARTMENT
123 FIFTH AVENUE - KIRKLAND, WA 98033-6189 - (425) 828-1243

N.E. 100TH STREET BRIDGE

TYPICAL BRIDGE SECTION

SHEET
S14

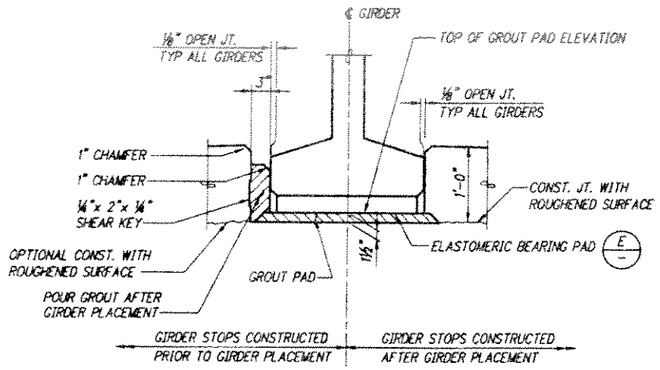

GIRDER STOP DETAIL (A)

NOTE:
GIRDER STOPS MAY BE CONSTRUCTED PRIOR TO GIRDER PLACEMENT OR CONSTRUCTED AFTER GIRDER PLACEMENT. THE SAME METHOD SHALL BE USED FOR EACH PIER.

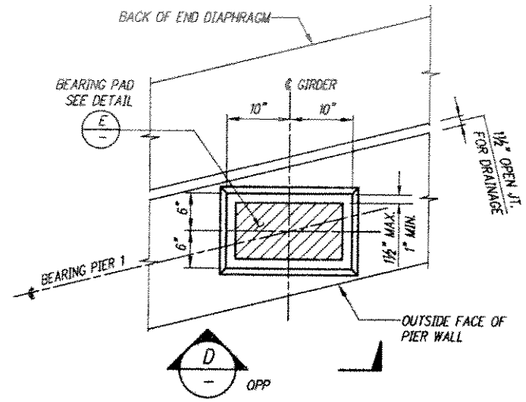

PLAN AT PIER 1

GROUT PAD PLAN (B)

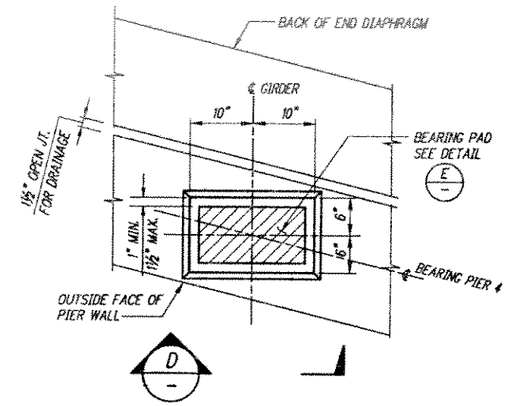

PLAN AT PIER 3

GROUT PAD PLAN (C)

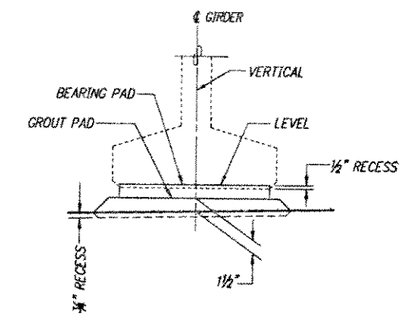

GROUT PAD ELEVATION (D)

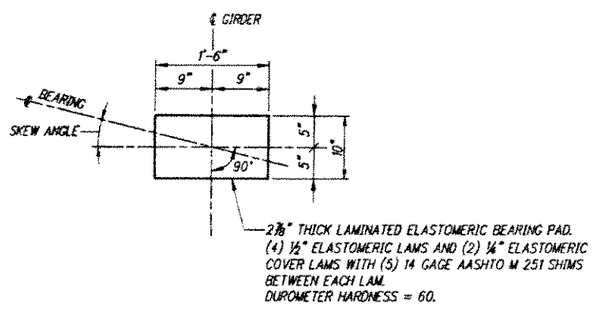

BEARING PAD DETAIL (E)

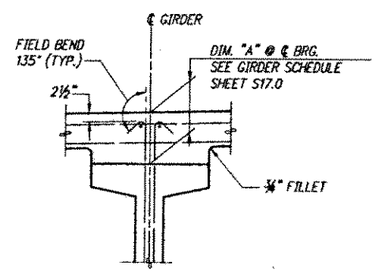

TYPICAL SECTION THROUGH GIRDER

SHOWING METHOD OF ADJUSTING ROADWAY ELEVATIONS FOR VERTICAL CURVES, CAMBER OR SUPERELEVATION.

kpff Consulting Engineers
1201 Third Avenue, Suite 900
Seattle, Washington 98101
(206) 622-5822 Fax (206) 622-8130

CALL 48 HOURS BEFORE YOU DIG 1-800-424-5555

RICHARD K. JOHNSON — STATE OF WASHINGTON — 24827 — REGISTERED PROFESSIONAL ENGINEER — EXPIRES 2/10/07

FILE	ENGR.	REVIEW	SCALE	DATE
	JEM	IH	SHOWN	

NO.	REVISION	BY	REVIEW	DATE

CITY OF KIRKLAND WASHINGTON

CITY OF KIRKLAND
PUBLIC WORKS DEPARTMENT
123 FIFTH AVENUE – KIRKLAND, WA 98033-6189 – (425) 828-1243

N.E. 100TH STREET BRIDGE

BEARING DETAILS

SHEET S15

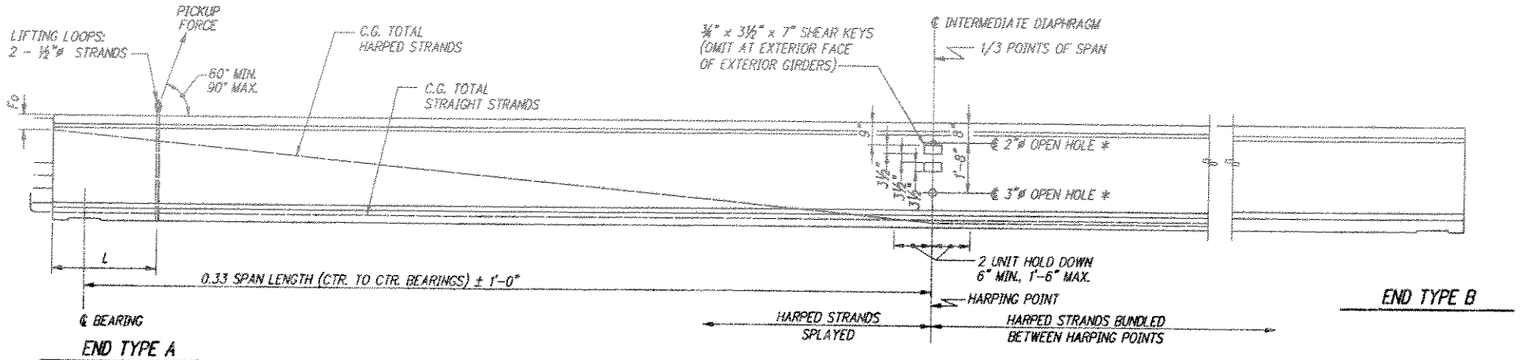

GIRDER ELEVATION

* OMIT HOLES AND PLACE INSERTS ON THE INTERIOR FACE OF EXTERIOR GIRDERS. PLACE HOLES AND INSERTS PARALLEL TO SKEW. INSERTS SHALL BE 1" RICHMOND/KOHLER F-50 BURKE HI-TENSILE, LANCASTER MALLEABLE OR APPROVED EQUAL.

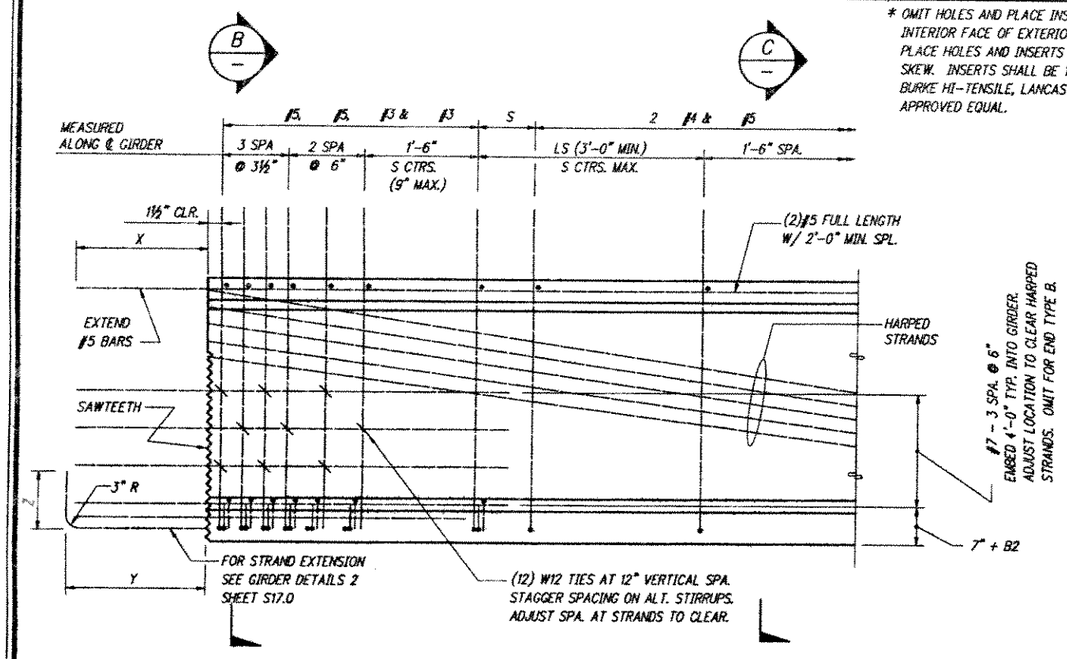

TYPICAL END ELEVATION

END TYPE C SHOWN ~ OTHER ENDS SIMILAR

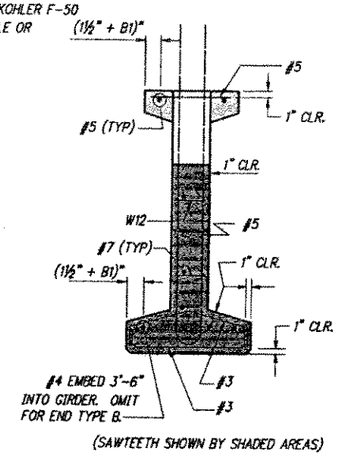

SECTION B

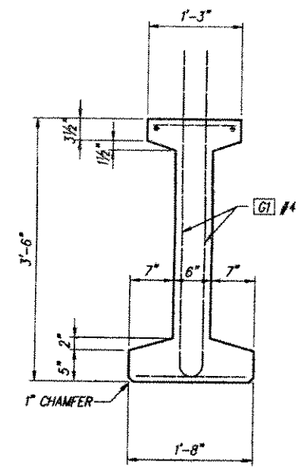

SECTION C

NOTES

ALL DETAILS ON THIS SHEET ARE FOR PRETENSIONED DESIGN ONLY.

PLAN LENGTH SHALL BE INCREASED AS NECESSARY TO COMPENSATE FOR SHORTENING DUE TO PRESTRESS AND SHRINKAGE.

EXTRA CAUTION MUST BE EXERCISED IN HANDLING AND PLACING ALL GIRDERS.

ALL GIRDERS OVER 105' LONG SHALL BE BRACED LATERALLY TO PREVENT TIPPING OR BUCKLING.

THE TOP SURFACE OF THE GIRDER FLANGE SHALL BE ROUGHENED IN ACCORDANCE WITH SECTION 6-02.3(25)H OF THE STANDARD SPECIFICATIONS.

IF THE LIFTING LOOPS EXTEND WITHIN 3" OF THE TOP OF THE ROADWAY SLAB THEY SHALL BE CUT OFF PRIOR TO POURING THE ROADWAY SLAB. ALL LIFTING STRANDS SHALL BE OF THE SAME MATERIAL AND STRENGTH AS THE PRESTRESSING STRANDS. WRAP THE LIFTING LOOPS SO THAT EACH STRAND WILL CARRY ITS SHARE OF THE TOTAL LOAD. EXTEND LIFTING LOOPS ENDING WITH A 9" LONG 90° HOOK TO WITHIN 3" CLEAR OF THE BOTTOM OF THE GIRDER.

CUT ALL STRANDS FLUSH WITH THE GIRDER ENDS AND PAINT WITH AN APPROVED EPOXY RESIN EXCEPT FOR EXTENDED STRANDS AS SHOWN.

FORMS FOR BEARING PAD RECESSES SHALL BE CONSTRUCTED AND FASTENED IN SUCH A MANNER AS NOT TO CAUSE DAMAGE TO THE GIRDER DURING THE STRAND RELEASE OPERATION.

ALL STRANDS ARE ½"ø LOW RELAXATION STRANDS (AASHTO M203 GRADE 270).

EXTENDED STRANDS AND BARS ARE PARALLEL TO GIRDER.

FOR SAWTEETH DETAILS, SEE SHEET S17.0

END TYPE	BEARING RECESS	X	Y	Z	SAWTEETH
A	YES	9"	9"	1'-6"	YES
B	YES	0"	0"	0"	NO
C	NO	1'-10"	1'-10"	9"	YES

MARK	LOCATION	SIZE	
G1	GIRDER STIRRUPS	4	
G2	GIRDER END STIRRUPS	5	
G3	GIRDER TOP FLANGE	5	STR.
G4	GIRDER LONGIT. FULL LENGTH	5	STR.
G5	GIRDER END LONGIT.	7	STR.
G6	GIRDER END TIES	W12	≠
G7	GIRDER END TIES	3	
G8	GIRDER END TIES	3	
G9	GIRDER LONGIT.	4	STR.

≠ #3 OR #4 MAY BE SUBSTITUTED FOR W12, FIELD BENDING IS OPTIONAL.

BENDING DIAGRAM

ALL DIMENSIONS ARE OUT TO OUT

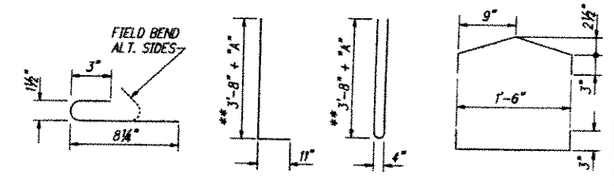

* VARIES FOR SKEWED SPANS

** FOR DIMENSION "A" SEE GIRDER SCHEDULE, SHEET S17.0

kpff Consulting Engineers
1201 Third Avenue, Suite 900
Seattle, Washington 98101
(206) 622-5822 Fax (206) 622-8130

CALL 48 HOURS BEFORE YOU DIG 1-800-424-5555

FILE	ENGR.	REVIEW	SCALE	DATE
			NONE	

NO.	REVISION	BY	REVIEW	DATE

CITY OF KIRKLAND WASHINGTON

CITY OF KIRKLAND
PUBLIC WORKS DEPARTMENT
123 FIFTH AVENUE - KIRKLAND, WA 98033-6189 - (425) 828-1243

N.E. 100TH STREET BRIDGE

W42G DETAILS 1

SHEET S16

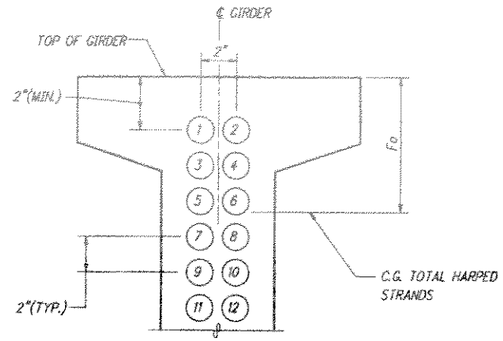

STRAND PATTERN AT GIRDER END

HARPED STRAND LOCATION SEQUENCE SHALL BE AS SHOWN (1), (2) ETC.

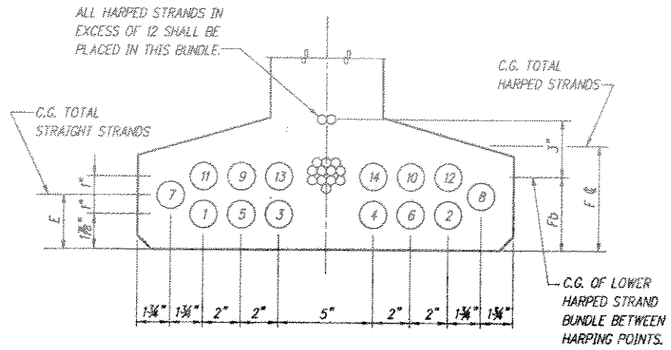

STRAND PATTERN AT ℄ SPAN

STRAND LOCATION SEQUENCE SHALL BE AS SHOWN (1), (2) ETC.

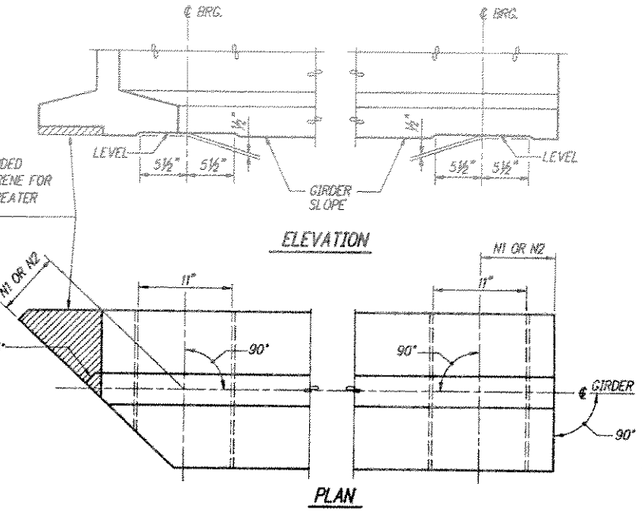

BEARING RECESS DETAIL

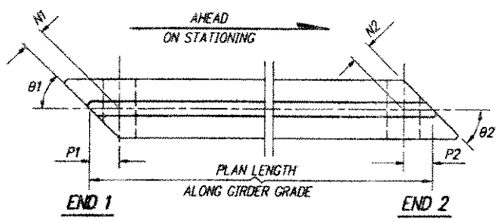

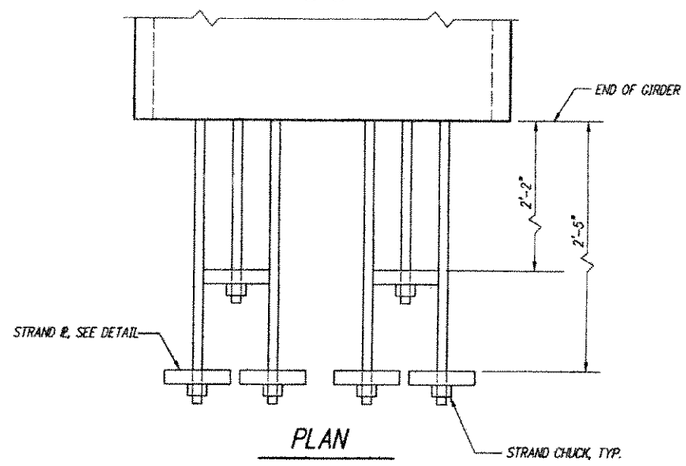

PLAN

STRAND PATTERN AT PIER 2

EXTEND 6 STRANDS (1), (2), (3), (4), (9) AND (10)

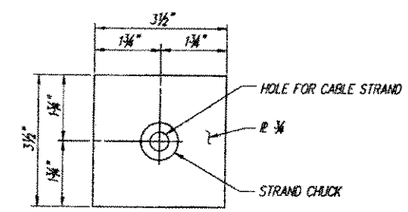

STRAND ℞ DETAIL

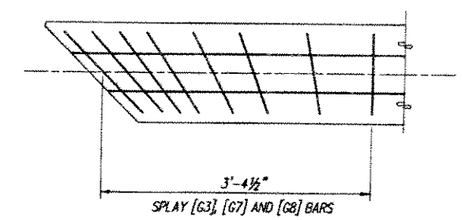

TRANSVERSE REINFORCING SKEWED ENDS

ONLY TRANSVERSE REINFOCEMENT SHOWN

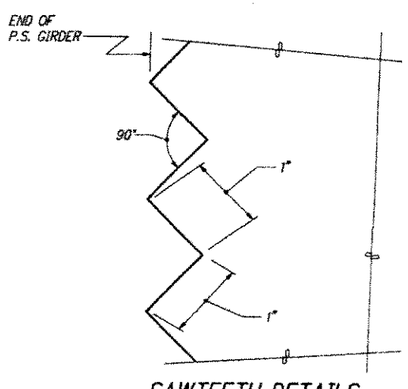

SAWTEETH DETAILS

SAWTEETH ARE FULL WIDTH – USE SAWTEETH KEYS FROM BOTTOM OF BOTTOM FLANGE TO BOTTOM OF LOWEST HARPED STRAND AS WELL AS TOP FLANGE ADJACENT TO HARPED STRANDS AS SHOWN IN SECTION B, SHEET S16.0

GIRDER SCHEDULE

DIMENSION "A" AT ℄ BEARINGS = 10½" BASED ON GIRDER DEFLECTION = D AT TIME OF SLAB PLACEMENT (120 DAYS)

SPAN		END 1 TYPE	END 2 TYPE	L	θ1	θ2	N1	N2	P1	P2	PLAN LENGTH (ALONG GIRDER GRADE)	MIN. CONC. COMPR. STRENGTH @ 28 DAYS F'C KSI	MIN. CONC. COMPR. STRENGTH @ RELEASE F'CI KSI	S (IN.)	LS (FT.)	HARPED NO. OF STRANDS	HARPED JACKING FORCE (KIPS)	STRAIGHT NO. OF STRANDS	STRAIGHT JACKING FORCE (KIPS)	LOCATION OF C.G. STRANDS (IN.) E	F℄	Fb	Fo	C (IN.)	D (IN.)	Ld (IN.)
1		A	C	1'-6"	77°15'11"	77°15'11"	1'-3"	0	1'-3⅜"	0	97'-0"	7.3	6.0	18"	3'-0"	12	372	14	434	2.88	3.0	0.0	7.0	2.23	3.98	0
2		C	A	1'-6"	77°15'11"	77°15'11"	0	1'-3"	0	1'-3⅜"	97'-0"	7.3	6.0	18"	3'-0"	12	372	14	434	2.88	3.0	0.0	7.0	2.23	3.98	0

kpff Consulting Engineers
1201 Third Avenue, Suite 900
Seattle, Washington 98101
(206) 622-5822 Fax (206) 622-8130

CALL 48 HOURS BEFORE YOU DIG 1-800-424-5555

RICHARD K. JOHNSON STATE OF WASHINGTON 24377 REGISTERED PROFESSIONAL ENGINEER
EXPIRES 9/10/

FILE	ENGR.	REVIEW	SCALE	DATE
			NONE	

NO.	REVISION	BY	REVIEW	DATE

CITY OF KIRKLAND WASHINGTON

CITY OF KIRKLAND
PUBLIC WORKS DEPARTMENT
123 FIFTH AVENUE – KIRKLAND, WA 98033-6189 – (425) 828-1243

N.E. 100TH STREET BRIDGE

W42G DETAILS 2

SHEET S17

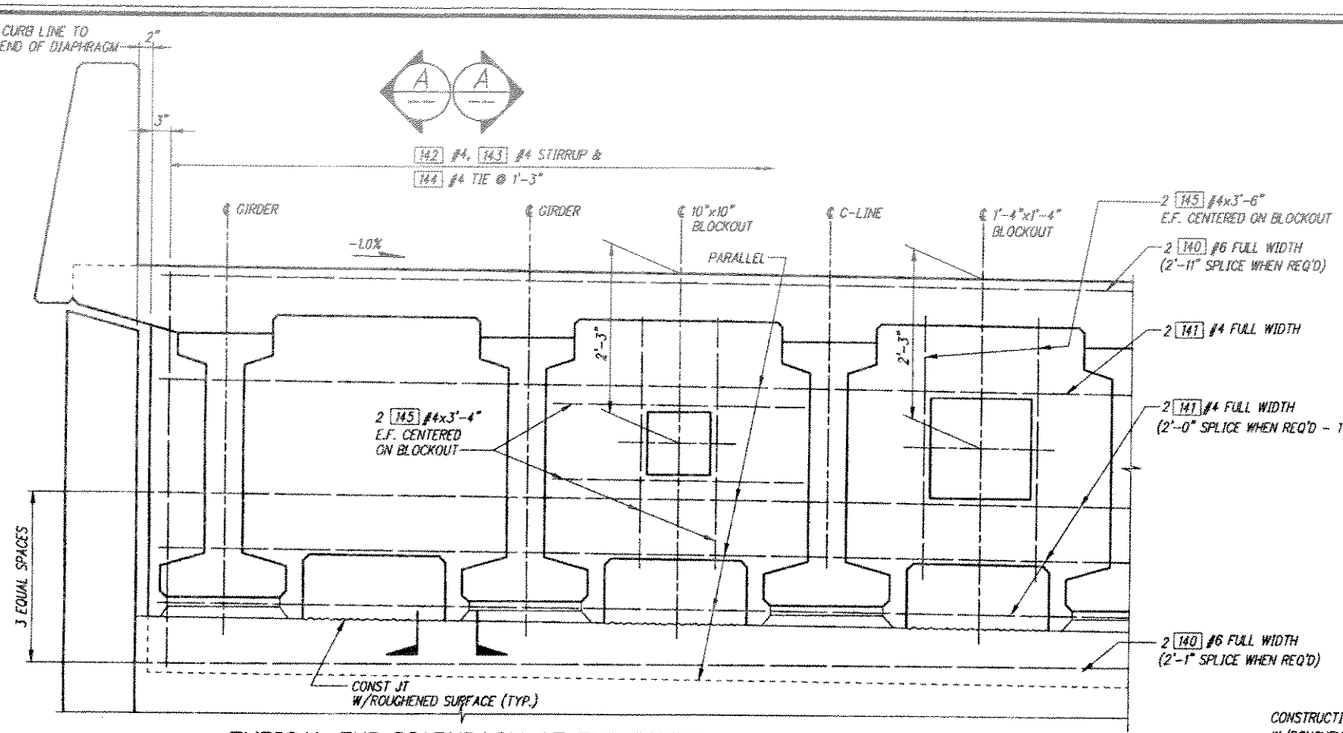

TYPICAL END DIAPHRAGM AT END PIERS

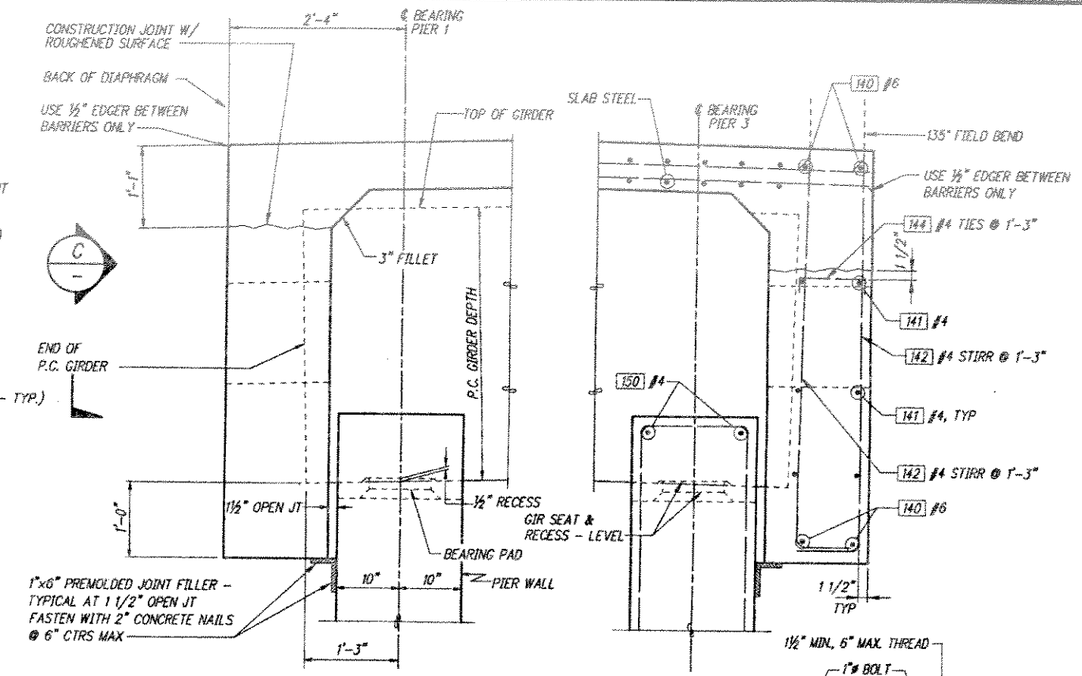

ALL LONGITUDINAL DIMENSIONS ARE NORMAL TO SKEW.

SECTION A

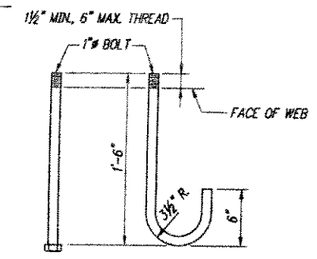

TOP ANCHOR BOT. ANCHOR

ANCHOR DETAILS

A.S.T.M. A-307

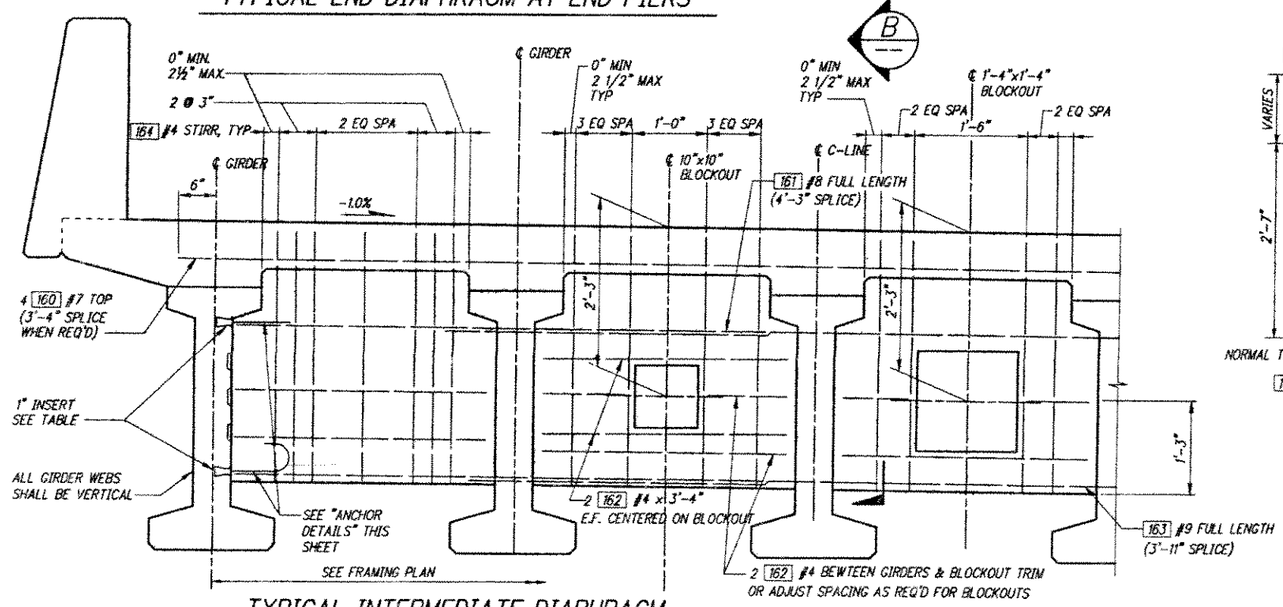

TYPICAL INTERMEDIATE DIAPHRAGM

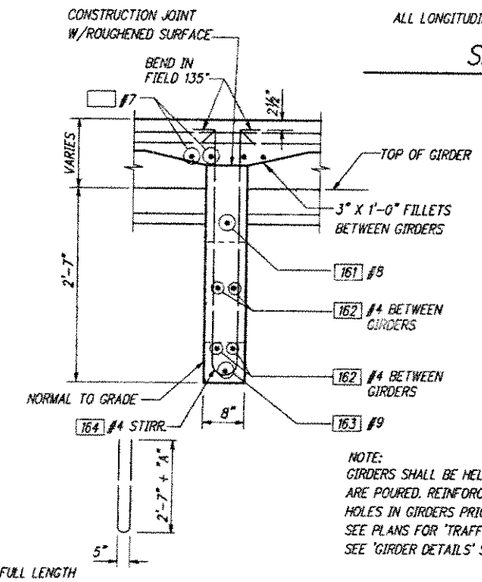

SECTION B

NOTE:
GIRDERS SHALL BE HELD RIGIDLY IN PLACE WHEN DIAPHRAGMS ARE POURED. REINFORCING BARS SHALL BE THREADED THROUGH HOLES IN GIRDERS PRIOR TO PLACING OF EXTERIOR GIRDERS. SEE PLANS FOR 'TRAFFIC BARRIER' DIMENSIONS & LOCATIONS. SEE 'GIRDER DETAILS' SHEET FOR DIMENSION "A".

INSERTS
GRINNELL UNIVERSAL INSERT FIG. 282
UNISTRUT M26 SWIVEL CONCRETE INSERT
DAYTON SUPERIOR

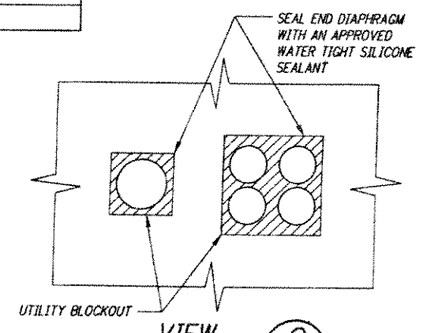

VIEW C

kpff Consulting Engineers
1201 Third Avenue, Suite 900
Seattle, Washington 98101
(206) 622-5822 Fax (206) 622-8130

CALL 48 HOURS BEFORE YOU DIG 1-800-424-5555

FILE	ENGR.	REVIEW	SCALE	DATE
	JEM	IH	SHOWN	

NO.	REVISION	BY	REVIEW	DATE

CITY OF KIRKLAND WASHINGTON

CITY OF KIRKLAND
PUBLIC WORKS DEPARTMENT
123 FIFTH AVENUE – KIRKLAND, WA 98033-6189 – (425) 828-1243

N.E. 100TH STREET BRIDGE

P.C. GIRDER DIAPHRAGM DETAILS

SHEET S18

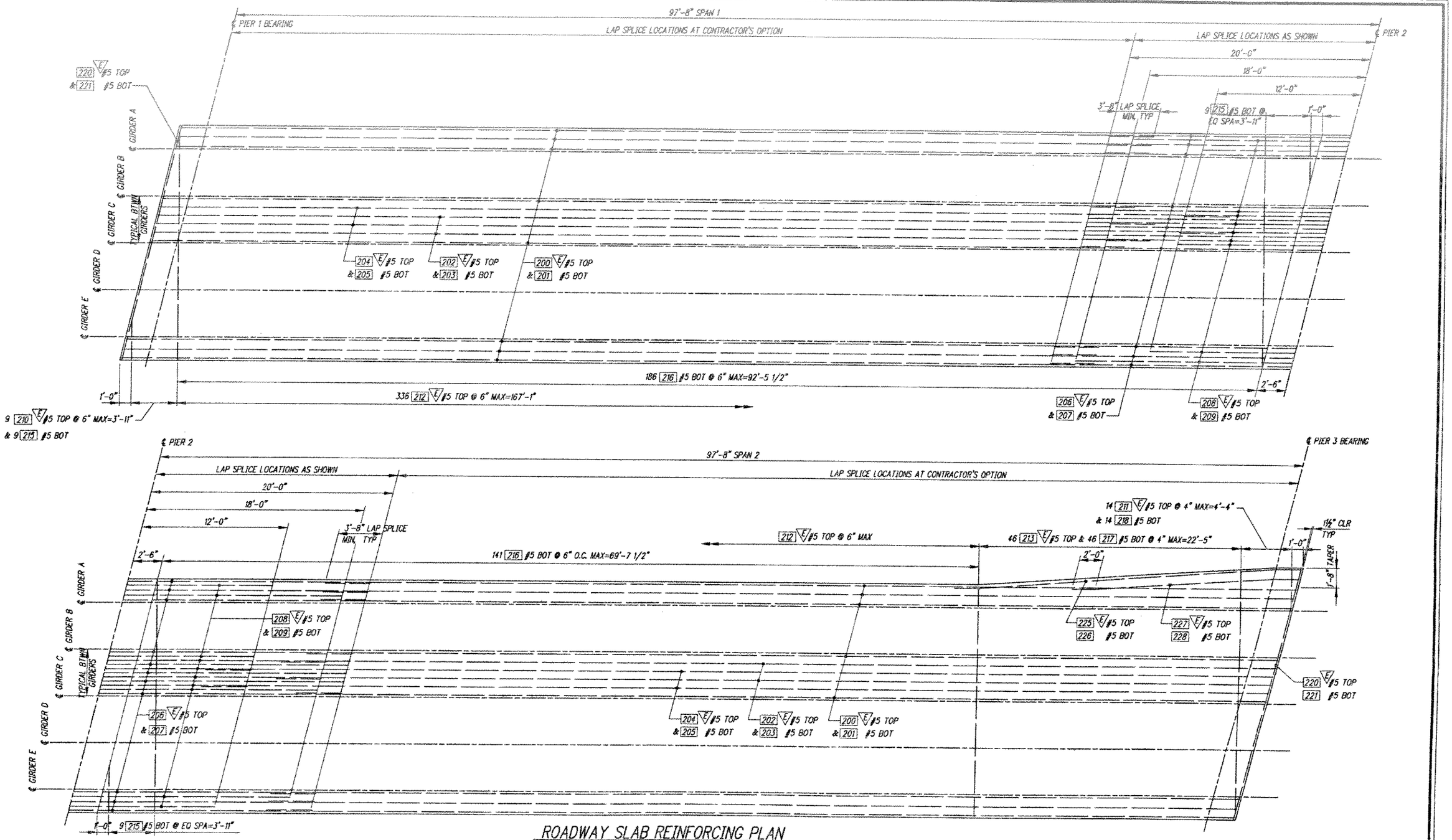

ROADWAY SLAB REINFORCING PLAN

kpff Consulting Engineers
1201 Third Avenue, Suite 900
Seattle, Washington 98101
(206) 622-5822 Fax (206) 622-8130

CALL 48 HOURS BEFORE YOU DIG 1-800-424-5555

FILE	ENGR.	REVIEW	SCALE	DATE
	JEM	IH	SHOWN	

NO.	REVISION	BY	REVIEW	DATE

CITY OF KIRKLAND WASHINGTON

CITY OF KIRKLAND
PUBLIC WORKS DEPARTMENT
123 FIFTH AVENUE – KIRKLAND, WA 98033-6189 – (425) 828-1243

N.E. 100TH STREET BRIDGE
BRIDGE ROADWAY
SLAB REINFORCING

SHEET
S19

XREFS: LEIMKUHL, JOHNSON, 100XIB,

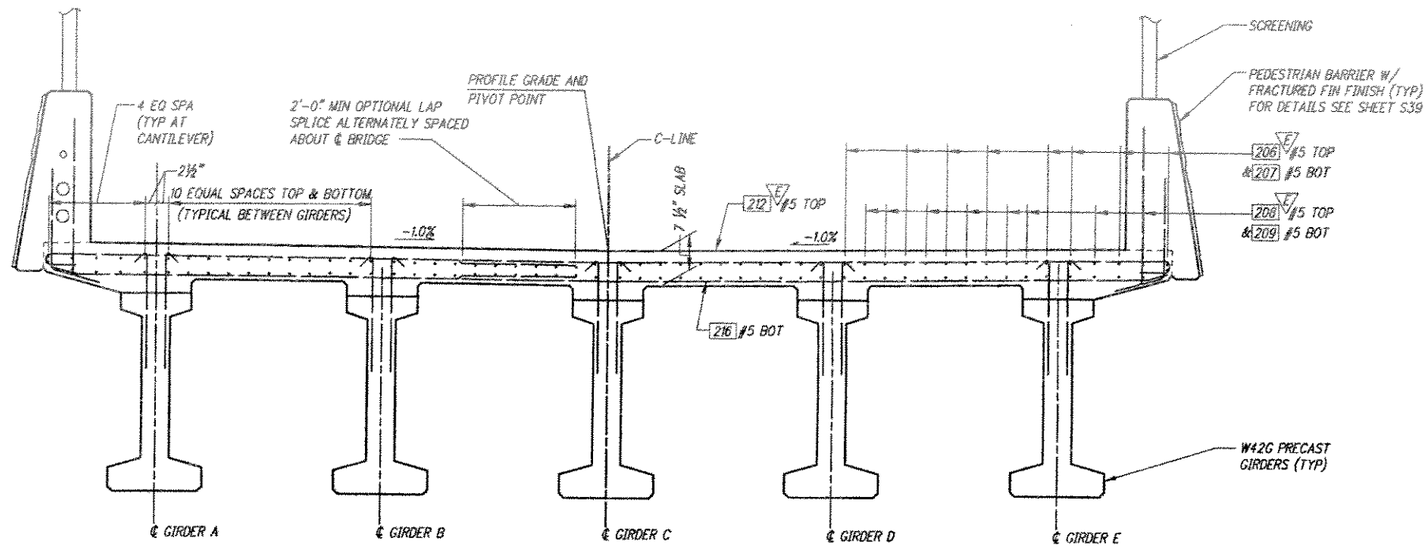

TYPICAL SLAB REINFORCEMENT SECTION NEAR PIER 2

SECTION LOOKING AHEAD ON STATIONING

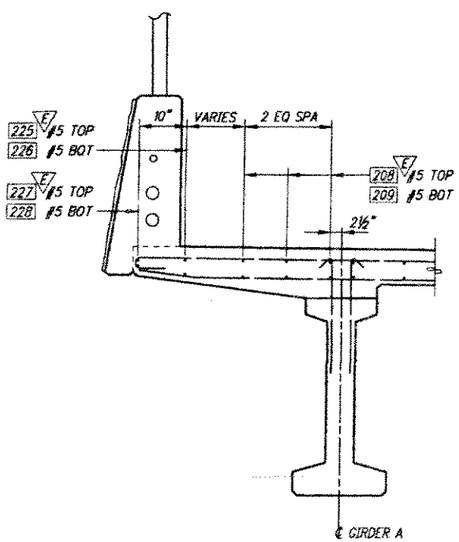

AT PIER 3

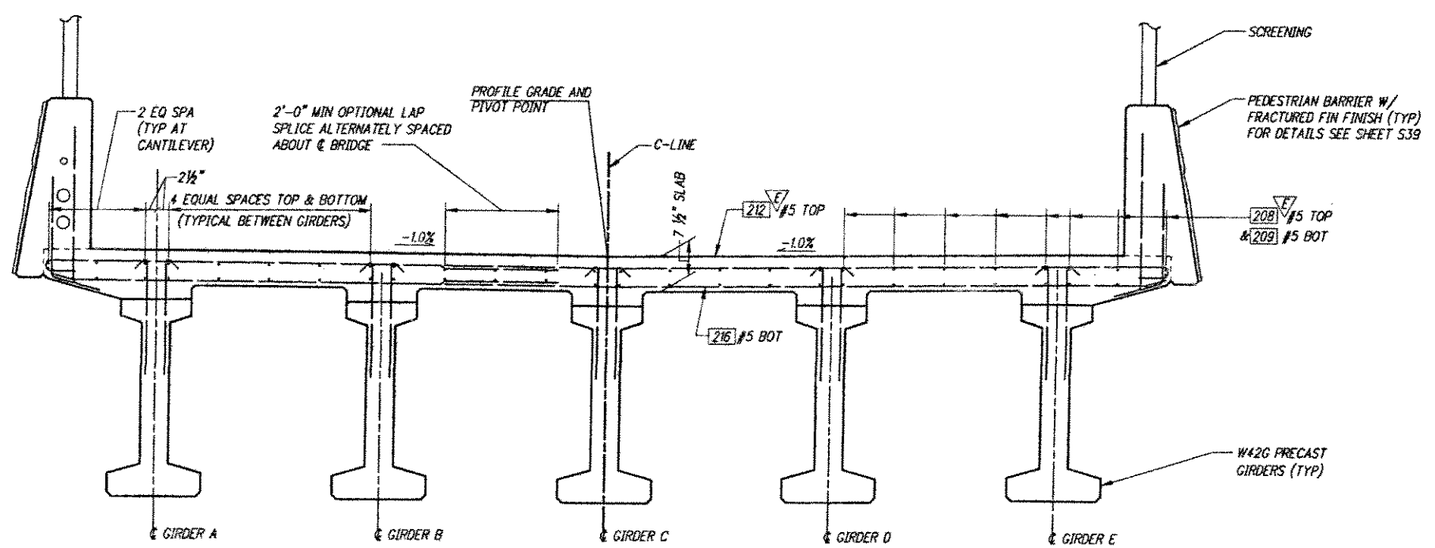

TYPICAL SLAB REINFORCEMENT SECTION NEAR MID-SPANS 1 AND 2

SECTION LOOKING AHEAD ON STATIONING

kpff Consulting Engineers
1201 Third Avenue, Suite 900
Seattle, Washington 98101
(206) 622-5822 Fax (206) 622-8130

CALL 48 HOURS BEFORE YOU DIG 1-800-424-5555

RICHARD K. JOHNSON, STATE OF WASHINGTON, REGISTERED PROFESSIONAL ENGINEER, EXPIRES 9/10/01

FILE	ENGR.	REVIEW	SCALE	DATE
	JEM	IH	SHOWN	

NO.	REVISION	BY	REVIEW	DATE

CITY OF KIRKLAND WASHINGTON

CITY OF KIRKLAND
PUBLIC WORKS DEPARTMENT
123 FIFTH AVENUE - KIRKLAND, WA 98033-6189 - (425) 828-1243

N.E. 100TH STREET BRIDGE

SLAB REINFORCEMENT SECTIONS

SHEET S20

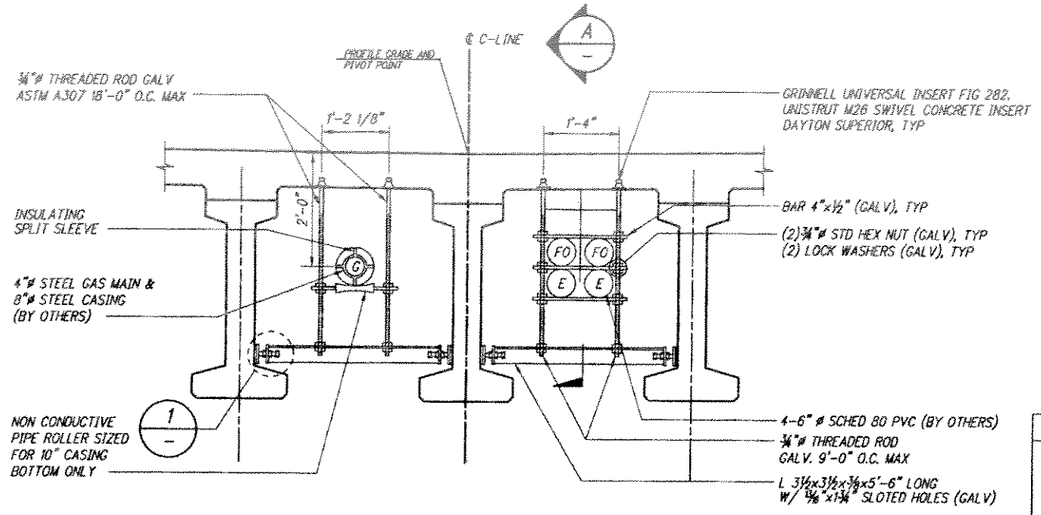

TYPICAL TRANSVERSE UTILITY SECTION

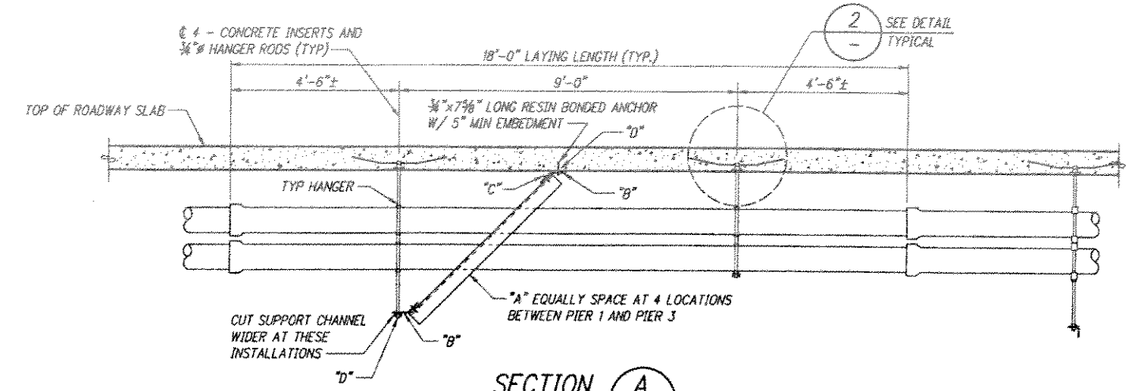

SECTION A

SUPPLIER	"A"	"B"	"C"	"D"
GRINNELL POWERSTRUT	PS 200 CHANNEL	HINGE PS 9402	(2) PS 6024 ½" HEX HEAD CAP SCREWS & PS NS CLAMPING NUTS	¾" WASHERS
UNISTRUT	P1000 CHANNEL	P1843 HINGE CONNECTOR	½"øx1½" HEX HEAD CAP SCREWS W/P3010 ½" CHANNEL NUTS	¾" WASHERS
HILTI	HS-158-12 CHANNEL	MW-3/45 CONNECTOR	(2) WKN-F PUSH BUTTONS	MG-F ¾" BASE PLATES

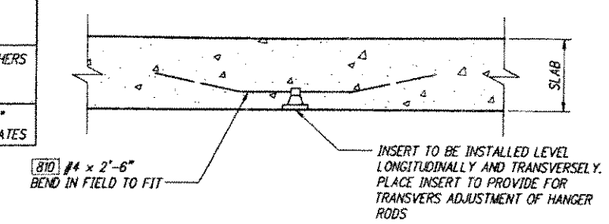

DETAIL 2

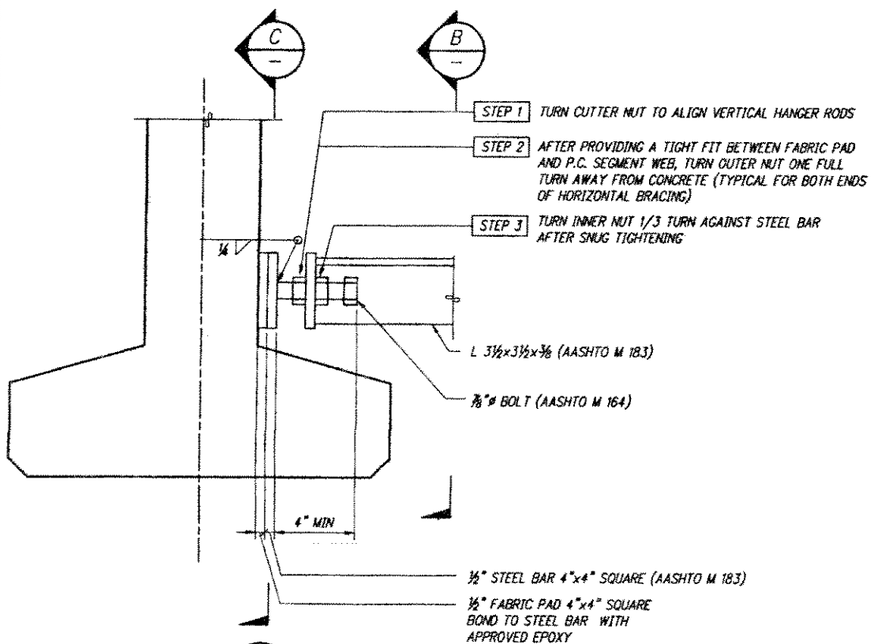

SECTION 1

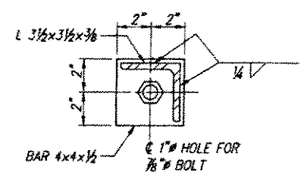

SECTION B

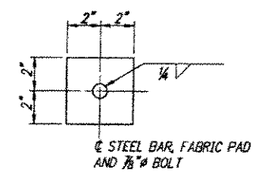

SECTION C

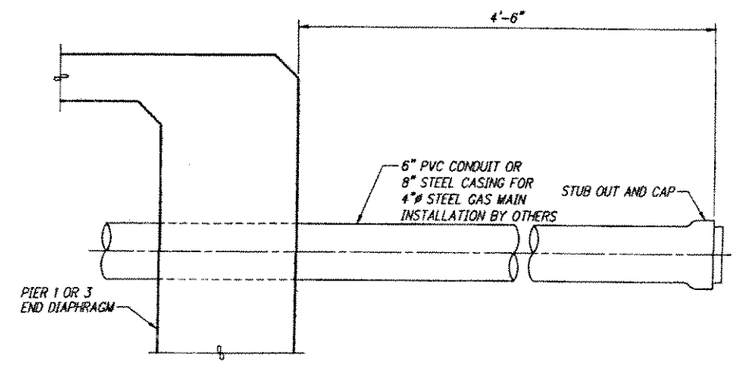

UTILITY CONDUIT PLACEMENT DETAIL

kpff Consulting Engineers
1201 Third Avenue, Suite 900
Seattle, Washington 98101
(206) 622-5822 Fax (206) 622-8130

CALL 48 HOURS BEFORE YOU DIG 1-800-424-5555

RICHARD K. JOHNSON STATE OF WASHINGTON 24875 REGISTERED PROFESSIONAL ENGINEER
EXPIRES 9/30/07

FILE	ENGR.	REVIEW	SCALE	DATE
	JEM	IH	SHOWN	

NO.	REVISION	BY	REVIEW	DATE

CITY OF KIRKLAND WASHINGTON

CITY OF KIRKLAND
PUBLIC WORKS DEPARTMENT
123 FIFTH AVENUE – KIRKLAND, WA 98033-6189 – (425) 828-1243

N.E. 100TH STREET BRIDGE

BRIDGE UTILITY DETAILS

SHEET S21

KREFS: JOHNSON, 100XIB.

RETAINING WALL NOTES:

1. TRAFFIC BARRIER WITH FOOTING SHALL EXTEND THE FULL LENGTH OF THE WALL. THE ACTUAL BEGINNING OF THE WALL PANELS MAY VARY PROVIDED THE MINIMUM FOOTING DEPTH IS MAINTAINED.
2. FOR RETAINING WALL SECTIONS SEE SHEET S25.
3. FIELD VERIFY BOTTOM OF WALL ELEVATIONS.

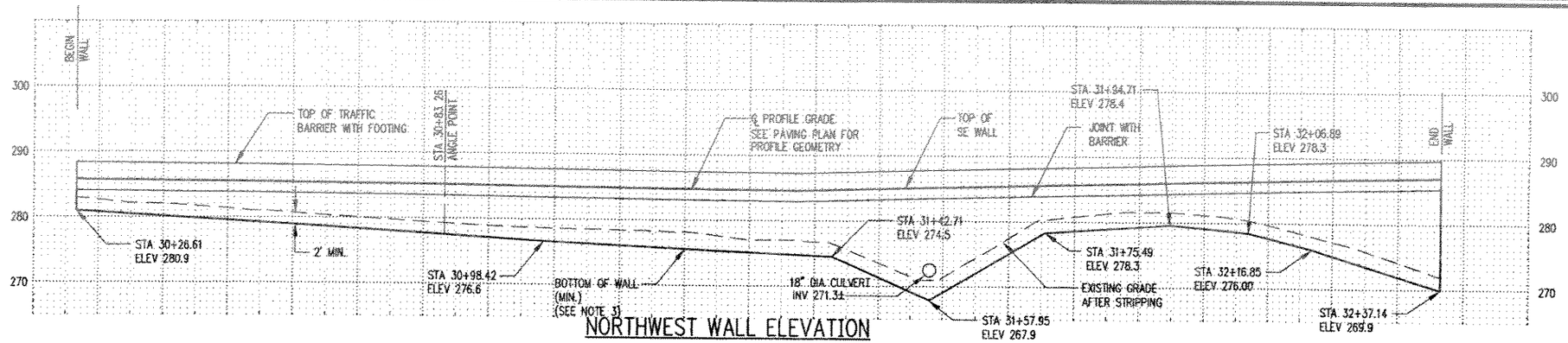

NORTHWEST WALL ELEVATION

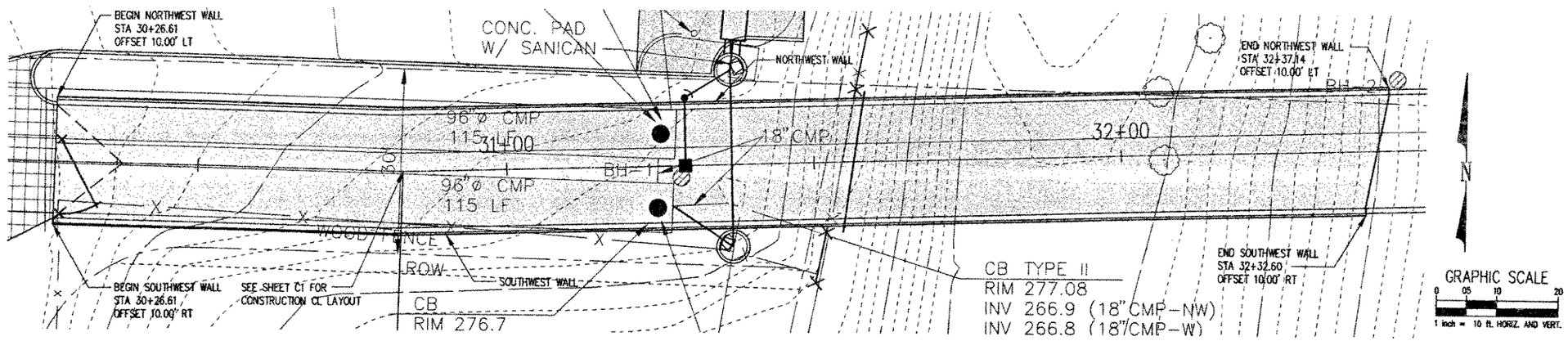

PLAN

SEC 33, T.26N., R.5E., & SEC 4, T.25N., R.5E., W.M.

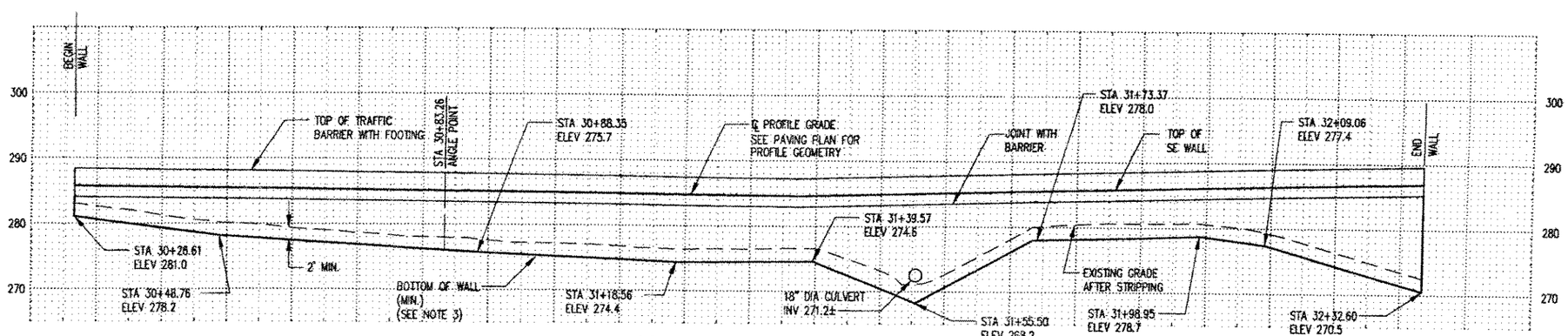

SOUTHWEST WALL ELEVATION

DATUM
1929 NGVD

kpff Consulting Engineers
1201 Third Avenue, Suite 900
Seattle, Washington 98101
(206) 622-5822 Fax (206) 622-8130

CALL 48 HOURS BEFORE YOU DIG 1-800-424-5555

RICHARD K. JOHNSON, STATE OF WASHINGTON, REGISTERED PROFESSIONAL ENGINEER
EXPIRES 9/30/02

FILE	ENGR.	REVIEW	SCALE	DATE
	BPH	RJL	SHOWN	5/28/99

NO.	REVISION	BY	REVIEW	DATE

CITY OF KIRKLAND WASHINGTON

CITY OF KIRKLAND
PUBLIC WORKS DEPARTMENT
123 FIFTH AVENUE - KIRKLAND, WA 98033-6189 - (425) 828-1243

N.E. 100TH STREET BRIDGE
SE WALL ELEVATIONS I

SHEET
S22

RETAINING WALL NOTES:

1. TRAFFIC BARRIER WITH FOOTING SHALL EXTEND THE FULL LENGTH OF THE WALL. THE ACTUAL BEGINNING OF THE WALL PANELS MAY VARY PROVIDED THE MINIMUM FOOTING DEPTH IS MAINTAINED.
2. FOR RETAINING WALL SECTIONS SEE SHEET S25.
3. FIELD VERIFY BOTTOM OF WALL ELEVATIONS.

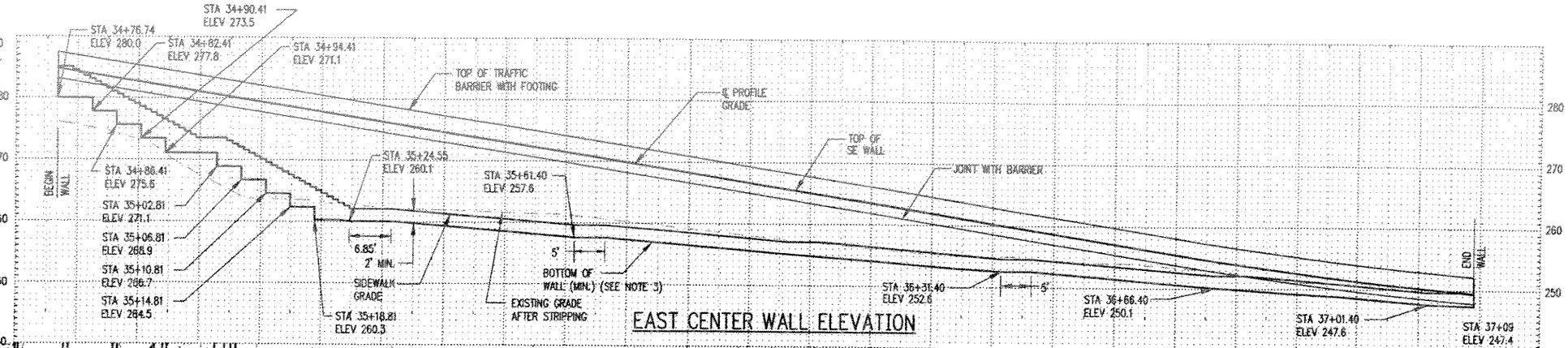

EAST CENTER WALL ELEVATION

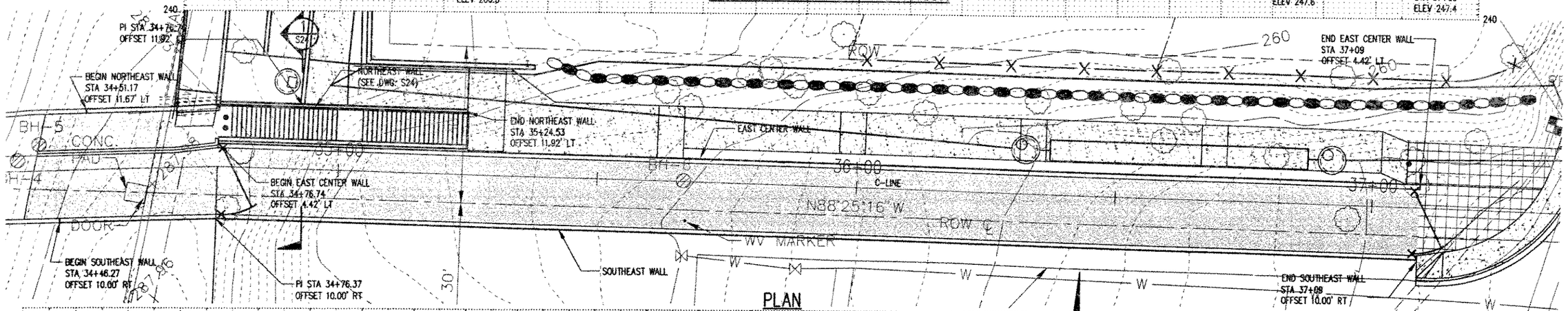

PLAN

SEC 33, T.26N., R.5E., & SEC 4, T.25N., R.5E., W.M.

GRAPHIC SCALE

1 inch = 10 ft. HORIZ. AND VERT.

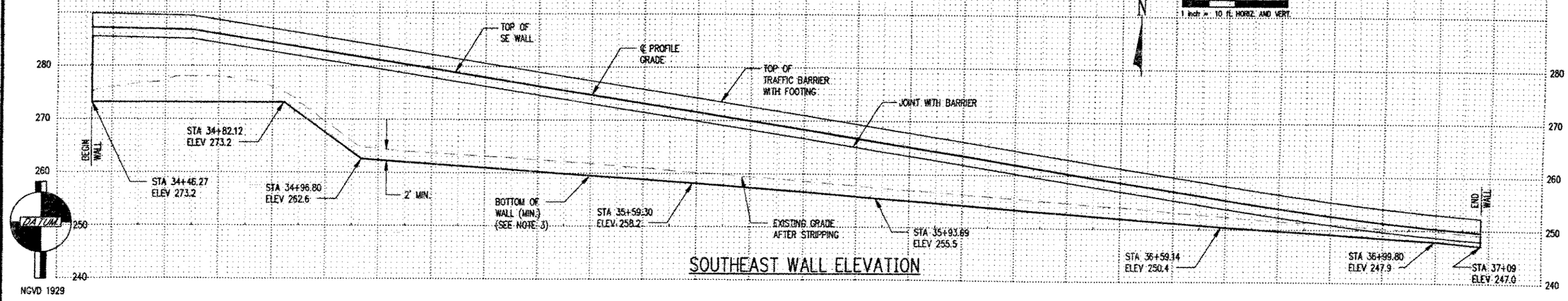

SOUTHEAST WALL ELEVATION

kpff Consulting Engineers
1201 Third Avenue, Suite 900
Seattle, Washington 98101
(206) 622-5822 Fax (206) 622-8130

CALL 48 HOURS BEFORE YOU DIG 1-800-424-5555

RICHARD K. JOHNSON STATE OF WASHINGTON REGISTERED PROFESSIONAL ENGINEER EXPIRES 9/10/02

FILE	ENGR.	REVIEW	SCALE	DATE
	BPH	RJL	SHOWN	5/28/99

NO.	REVISION	BY	REVIEW	DATE

CITY OF KIRKLAND WASHINGTON

CITY OF KIRKLAND
PUBLIC WORKS DEPARTMENT
123 FIFTH AVENUE - KIRKLAND, WA 98033-6189 - (425) 828-1243

N.E. 100TH STREET BRIDGE

SE WALL ELEVATIONS II

SHEET S23

RETAINING WALL NOTES:

1. THE TRAFFIC BARRIER WITH FOOTING SHALL EXTEND THE FULL LENGTH OF THE WALL. THE ACTUAL BEGINNING OF THE WALL PANELS MAY VARY PROVIDED THE MINIMUM FOOTING DEPTH IS MAINTAINED.
2. FOR RETAINING WALL SECTIONS SEE SHEET S25.
3. FIELD VERIFY BOTTOM OF WALL ELEVATIONS.
4. SEE STAIR PLAN AND ELEVATION FOR ADDITIONAL INFORMATION.

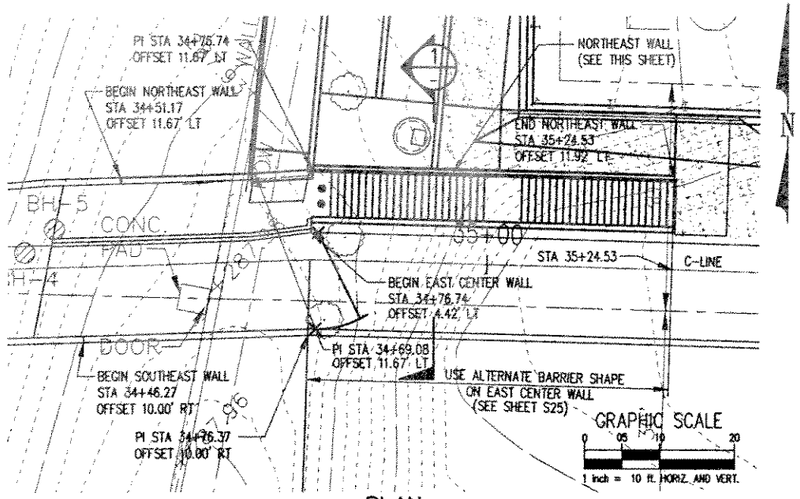

PLAN

SEC 33, T.26N., R.5E., & SEC 4, T.25N., R.5E., W.M.

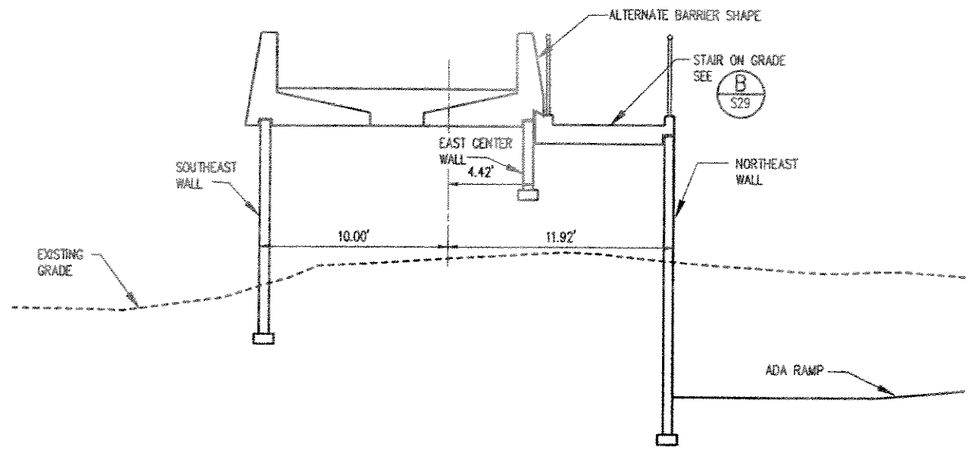

SE WALL CROSS SECTION 1

NTS

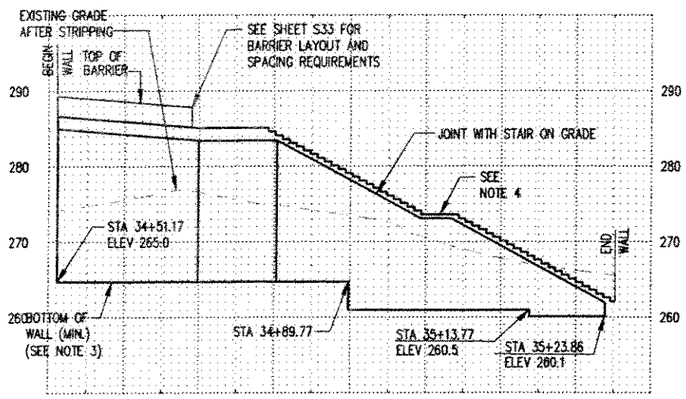

NORTHEAST WALL ELEVATION

DATUM

1929 NGVD

kpff Consulting Engineers

1201 Third Avenue, Suite 900
Seattle, Washington 98101
(206) 622-5822 Fax (206) 622-8130

CALL 48 HOURS BEFORE YOU DIG 1-800-424-5555

RICHARD K. JOHNSON
STATE OF WASHINGTON
24887
REGISTERED PROFESSIONAL ENGINEER
EXPIRES 9/30/02

FILE	ENGR.	REVIEW	SCALE	DATE
	BPH	RJL	SHOWN	5/28/99

NO.	REVISION	BY	REVIEW	DATE

CITY OF KIRKLAND WASHINGTON

CITY OF KIRKLAND
PUBLIC WORKS DEPARTMENT
123 FIFTH AVENUE – KIRKLAND, WA 98033-6189 – (425) 828-1243

N.E. 100TH STREET BRIDGE

SE WALL ELEVATIONS III

SHEET

S24

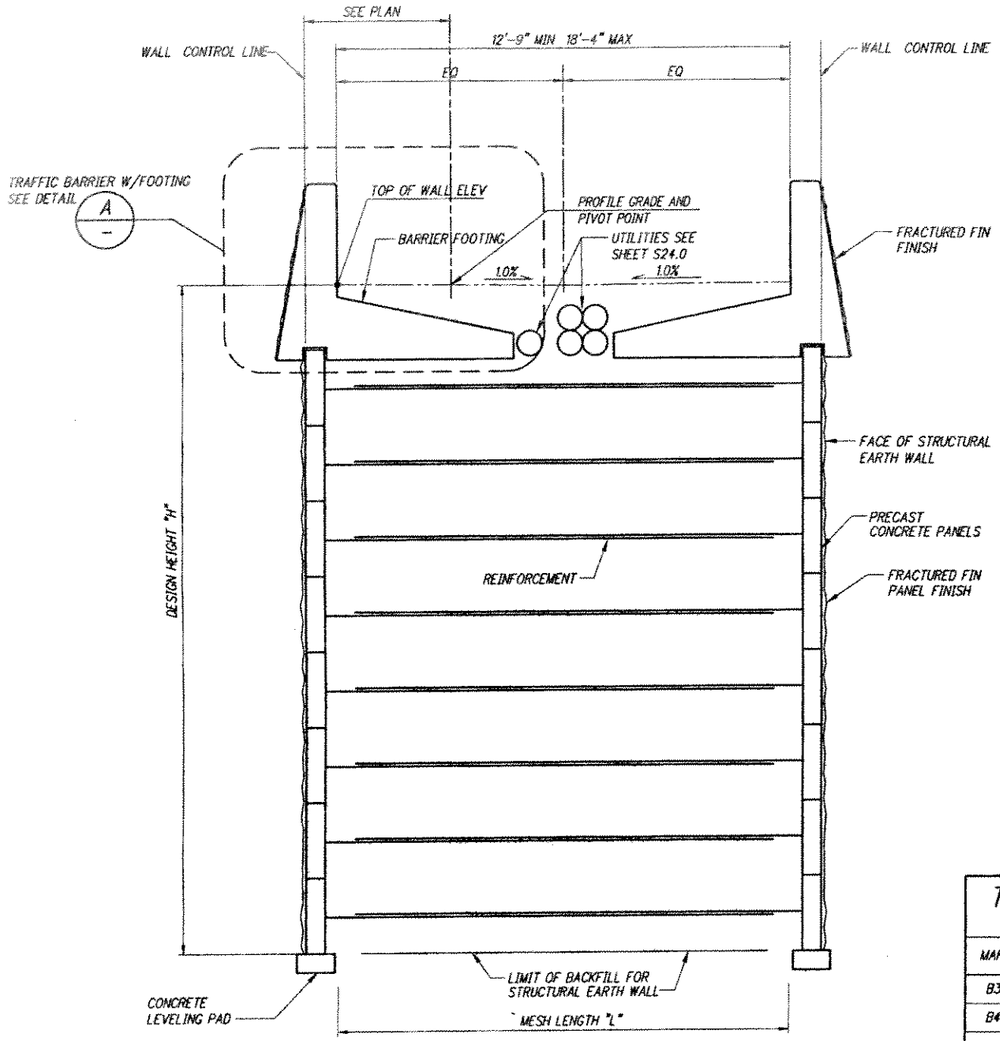

TYPICAL CROSS SECTION

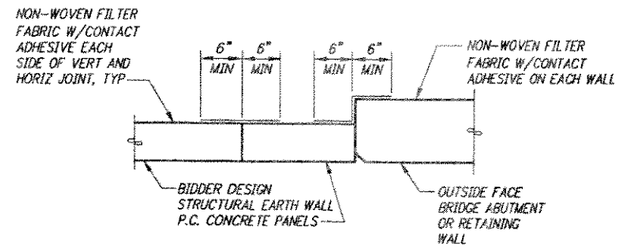

JOINT DETAIL PLAN

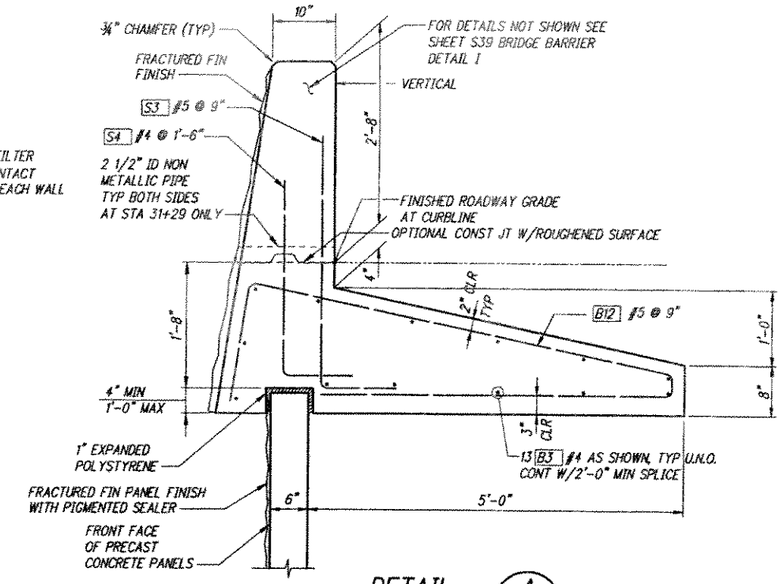

DETAIL A

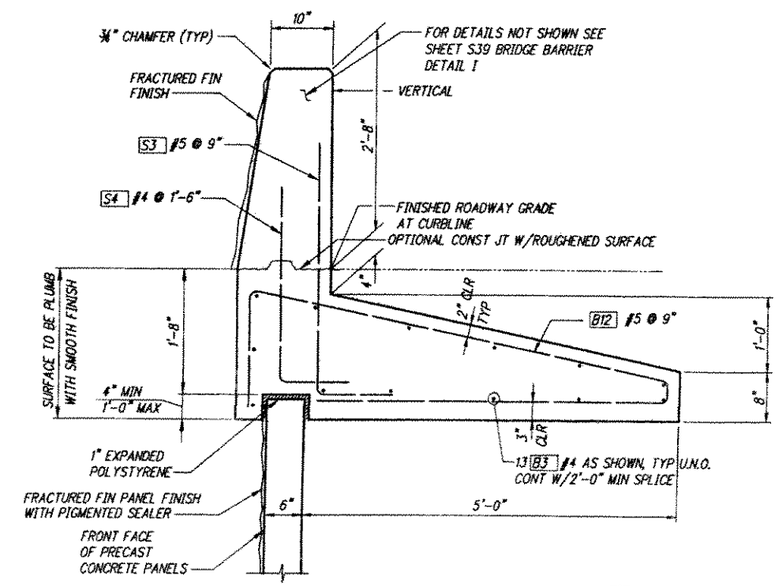

ALTERNATE BARRIER SHAPE A

NOTE: USE ONLY AT EAST CENTER WALL BETWEEN STA 34+76.74 AND STA 35+24.53

TRAFFIC BARRIER WITH FOOTING BAR LIST

ALL REINFORCING SHALL BE AASHTO M 31, GR. 60.

MARK	SIZE	LENGTH		BENDING DIAGRAM (ALL DIMENSIONS ARE OUT TO OUT)
B3	4	(a)	STR.	
B4	6	(a)	STR.	

FOR STR. BAR BENDS AND SIZES, SEE BRIDGE BARLIST.

(a) DETERMINE FROM PLANS

MIN. BEND RADIUS TYP.

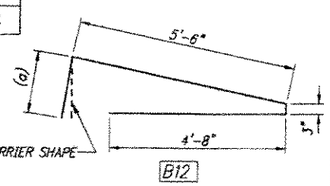

kpff Consulting Engineers
1201 Third Avenue, Suite 900
Seattle, Washington 98101
(206) 622-5822 Fax (206) 622-8130

CALL 48 HOURS BEFORE YOU DIG 1-800-424-5555

RICHARD K. JOHNSON STATE OF WASHINGTON REGISTERED PROFESSIONAL ENGINEER EXPIRES 9/10/01

FILE	ENGR.	REVIEW	SCALE	DATE
	JEM	IH	SHOWN	

NO.	REVISION	BY	REVIEW	DATE

CITY OF KIRKLAND WASHINGTON

CITY OF KIRKLAND
PUBLIC WORKS DEPARTMENT
123 FIFTH AVENUE – KIRKLAND, WA 98033-6189 – (425) 828-1243

N.E. 100TH STREET BRIDGE

SE WALL SECTIONS AND DETAILS

SHEET S25

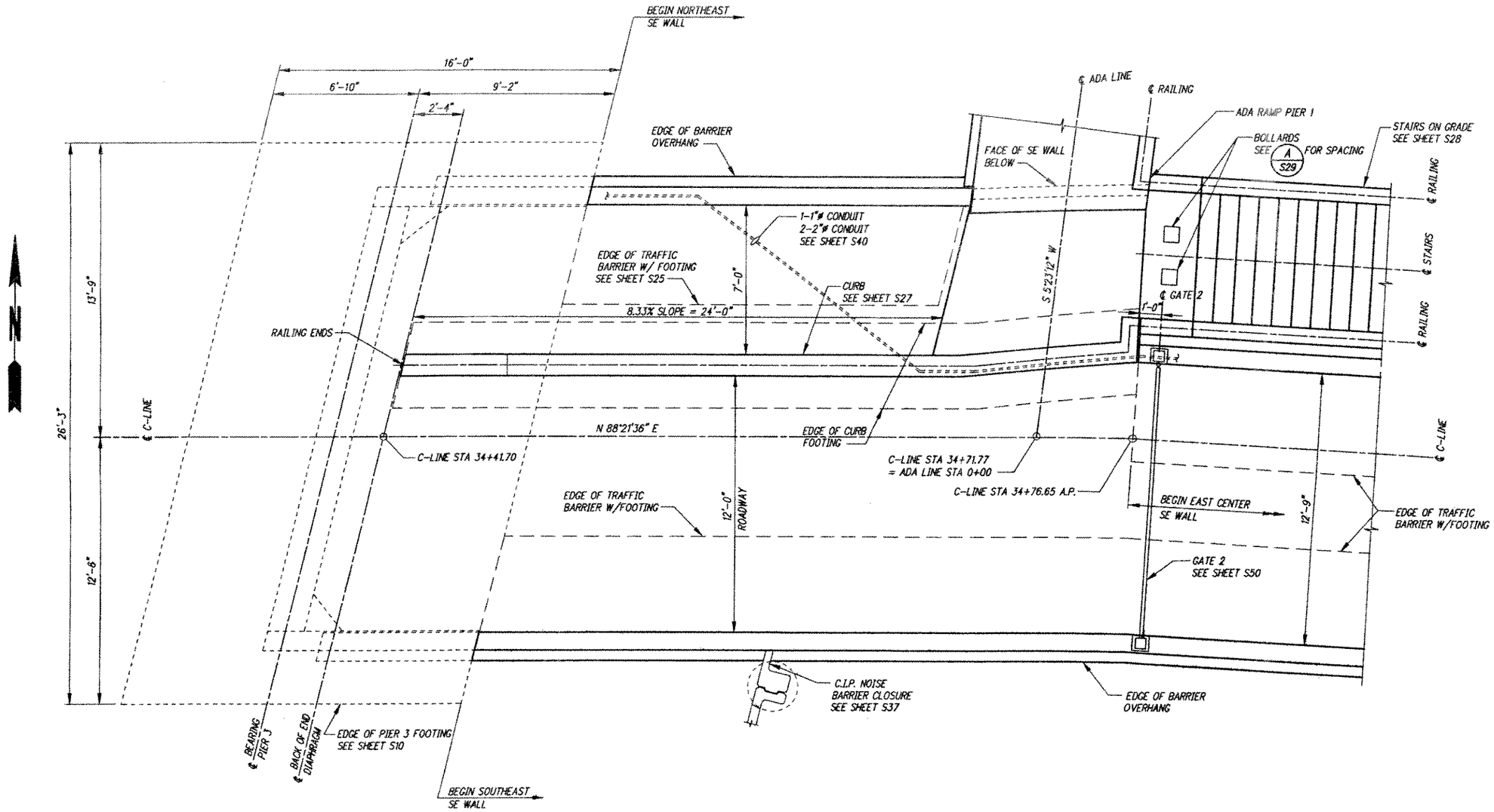

PIER 3 – PLAN OF ABUTMENT APPROACH

kpff Consulting Engineers
1201 Third Avenue, Suite 900
Seattle, Washington 98101
(206) 622-5822 Fax (206) 622-8130

CALL 48 HOURS BEFORE YOU DIG 1-800-424-5555

RICHARD K. JOHNSON — STATE OF WASHINGTON — 24978 — REGISTERED PROFESSIONAL ENGINEER — EXPIRES 9/30/02

FILE	ENGR.	REVIEW	SCALE	DATE
	JEM	IH	SHOWN	

NO.	REVISION	BY	REVIEW	DATE

CITY OF KIRKLAND WASHINGTON

CITY OF KIRKLAND
PUBLIC WORKS DEPARTMENT
123 FIFTH AVENUE – KIRKLAND, WA 98033-6189 – (425) 828-1243

N.E. 100TH STREET BRIDGE

PIER 3 APPROACH LAYOUT

SHEET S26

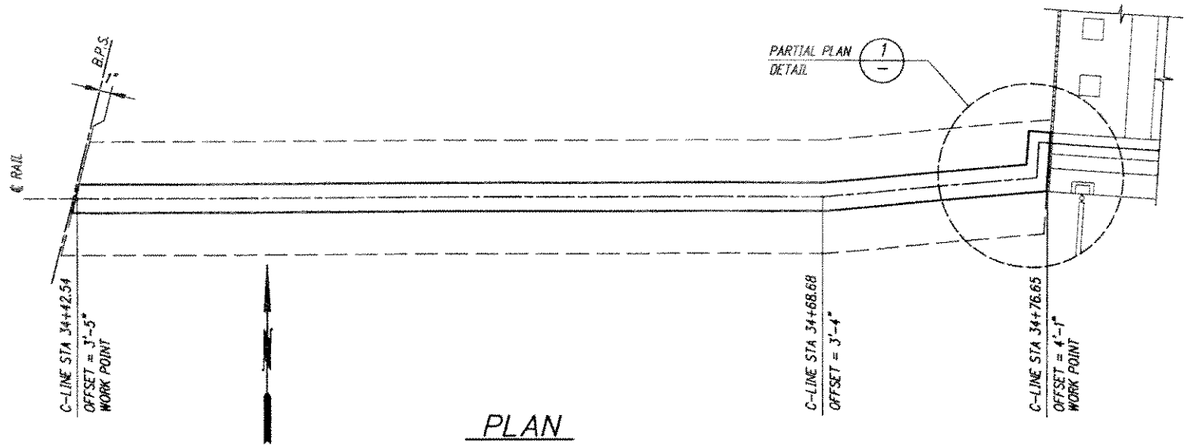

PLAN

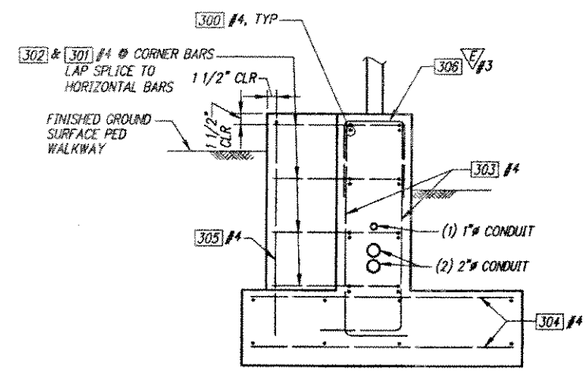

SECTION C

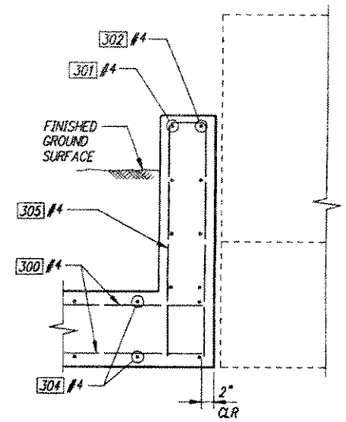

SECTION D

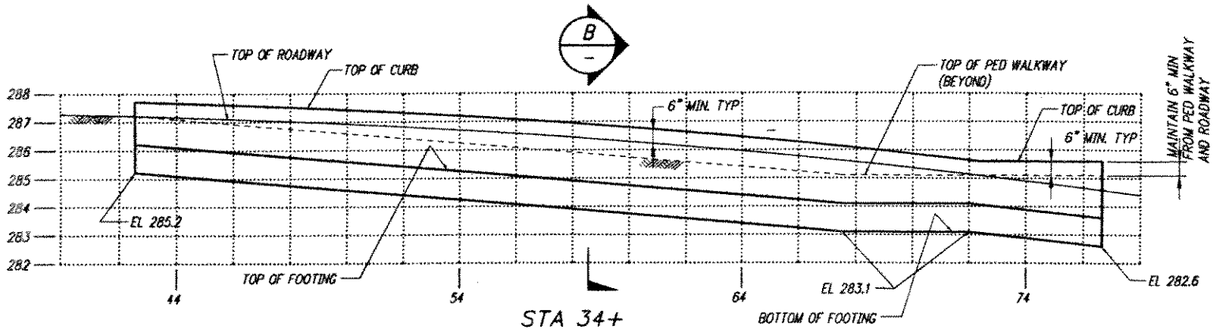

ELEVATION

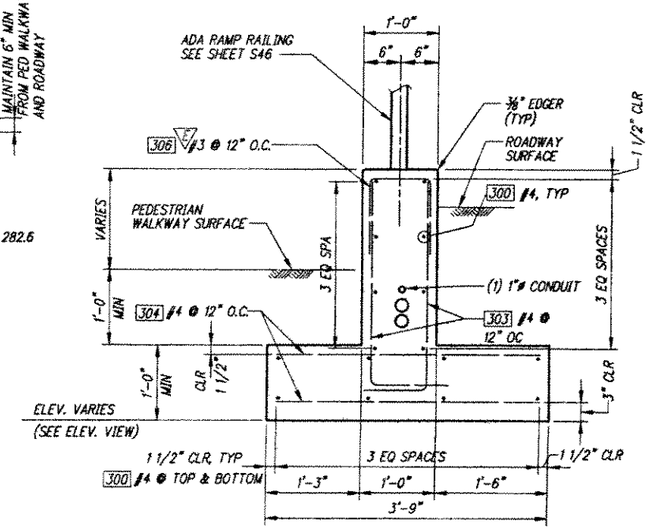

SECTION B

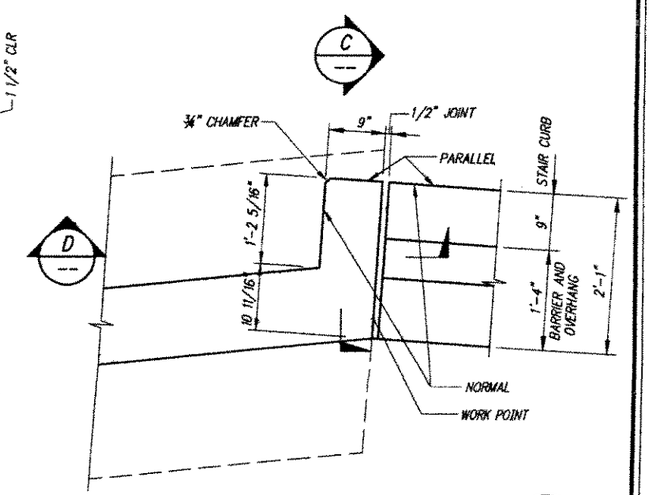

PARTIAL PLAN DETAIL 1

kpff Consulting Engineers
1201 Third Avenue, Suite 900
Seattle, Washington 98101
(206) 622-5822 Fax (206) 622-8130

CALL 48 HOURS
BEFORE YOU DIG
1-800-424-5555

RICHARD K. JOHNSON
STATE OF WASHINGTON
24409
REGISTERED
PROFESSIONAL ENGINEER
EXPIRES 9/10/07

FILE	ENGR.	REVIEW	SCALE	DATE
	JEM	IH	SHOWN	

NO.	REVISION	BY	REVIEW	DATE

CITY OF KIRKLAND WASHINGTON

CITY OF KIRKLAND
PUBLIC WORKS DEPARTMENT
123 FIFTH AVENUE - KIRKLAND, WA 98033-6189 - (425) 828-1243

N.E. 100TH STREET BRIDGE

PIER 3 APPROACH
MEDIAN CURB DETAILS

SHEET
S27

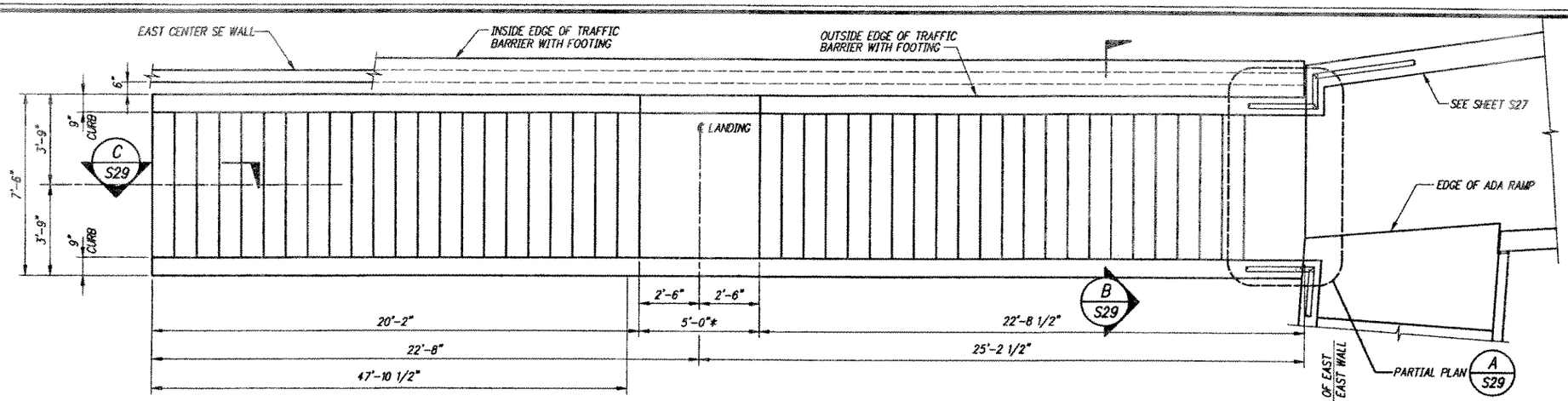

STAIR PLAN

* DISTANCE IS FROM BOTTOM OF RISER TO BOTTOM OF NEXT RISER

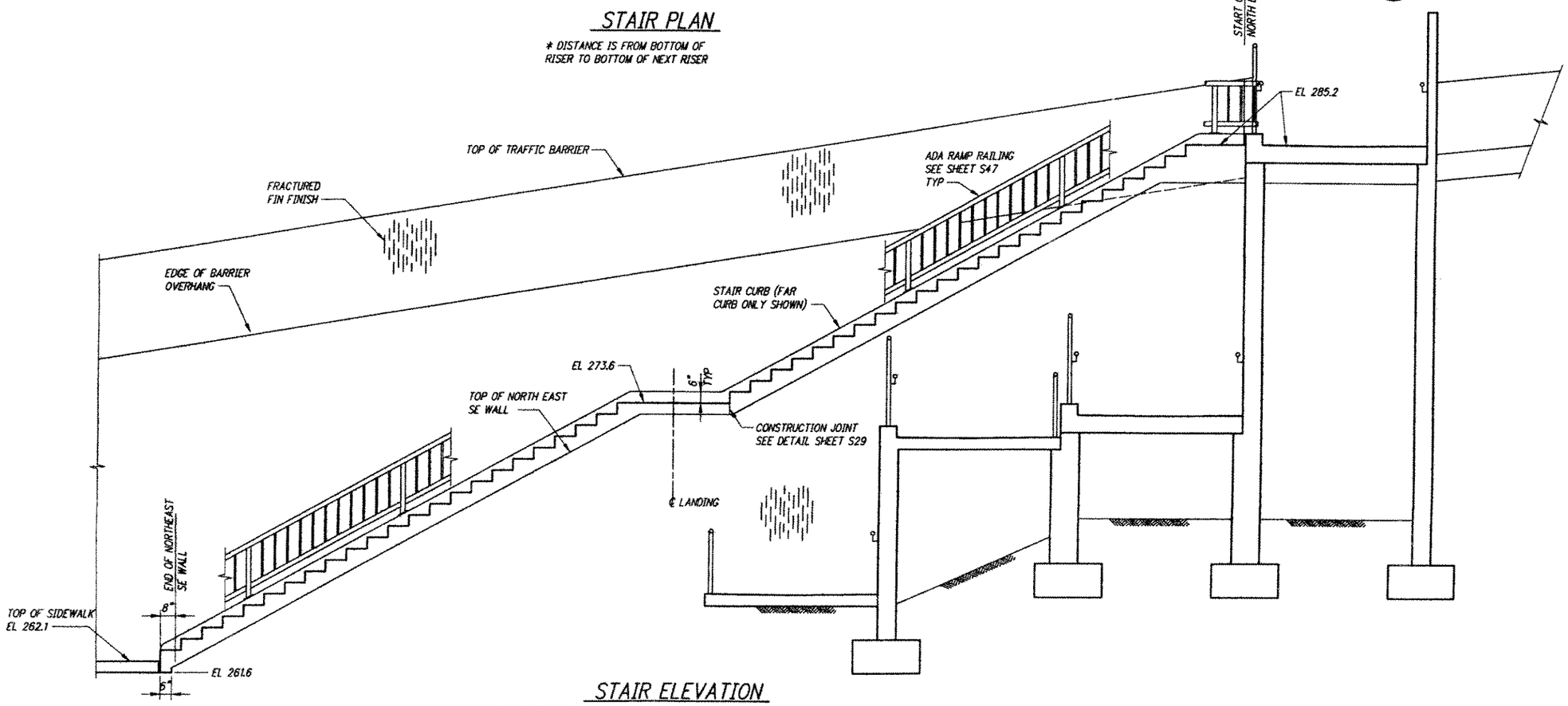

STAIR ELEVATION

NOTE: STAIR ON GRADE SUBGRADE TREATMENT SAME AS FOR SLAB ON GRADE. SEE S34

kpff Consulting Engineers
1201 Third Avenue, Suite 900
Seattle, Washington 98101
(206) 622-5822 Fax (206) 622-8130

CALL 48 HOURS BEFORE YOU DIG 1-800-424-5555

RICHARD K. JOHNSON STATE OF WASHINGTON 24812 REGISTERED PROFESSIONAL ENGINEER
EXPIRES 6/10/07

FILE	ENGR.	REVIEW	SCALE	DATE
	JEM	IH	SHOWN	

NO.	REVISION	BY	REVIEW	DATE

CITY OF KIRKLAND WASHINGTON

CITY OF KIRKLAND
PUBLIC WORKS DEPARTMENT
123 FIFTH AVENUE – KIRKLAND, WA 98033-6189 – (425) 828-1243

N.E. 100TH STREET BRIDGE

EAST STAIR PLAN AND ELEVATION

SHEET S28

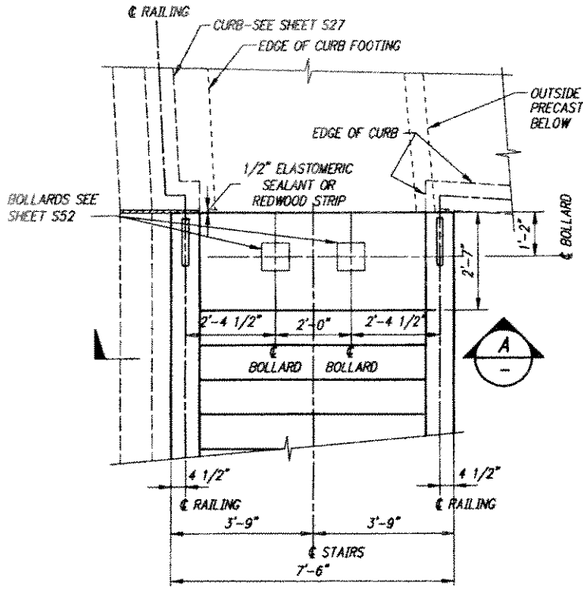

PARTIAL PLAN (A / S29, S26)

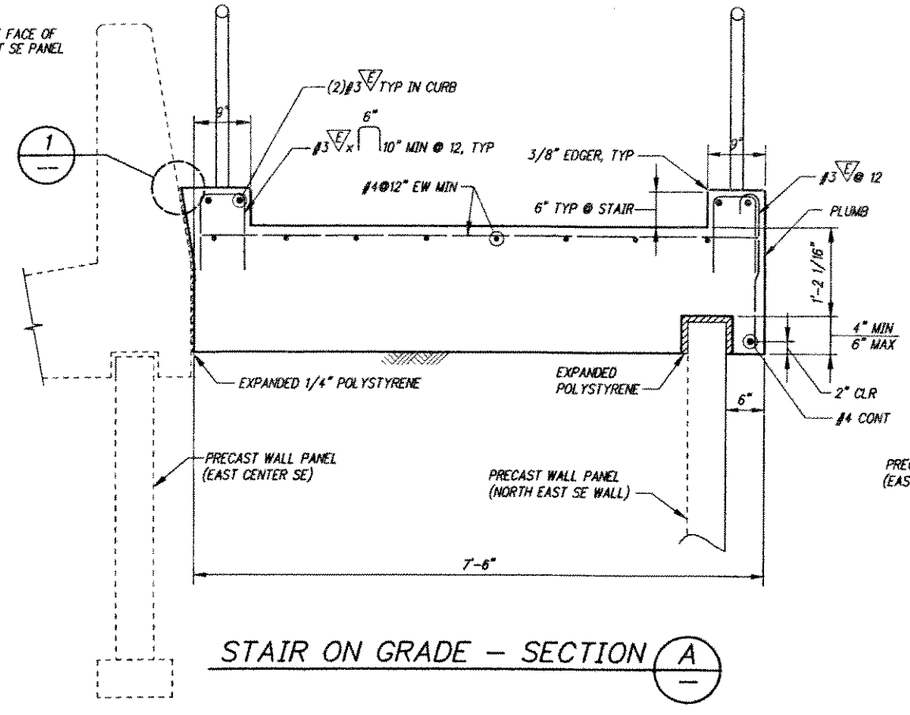

STAIR ON GRADE – SECTION (A)

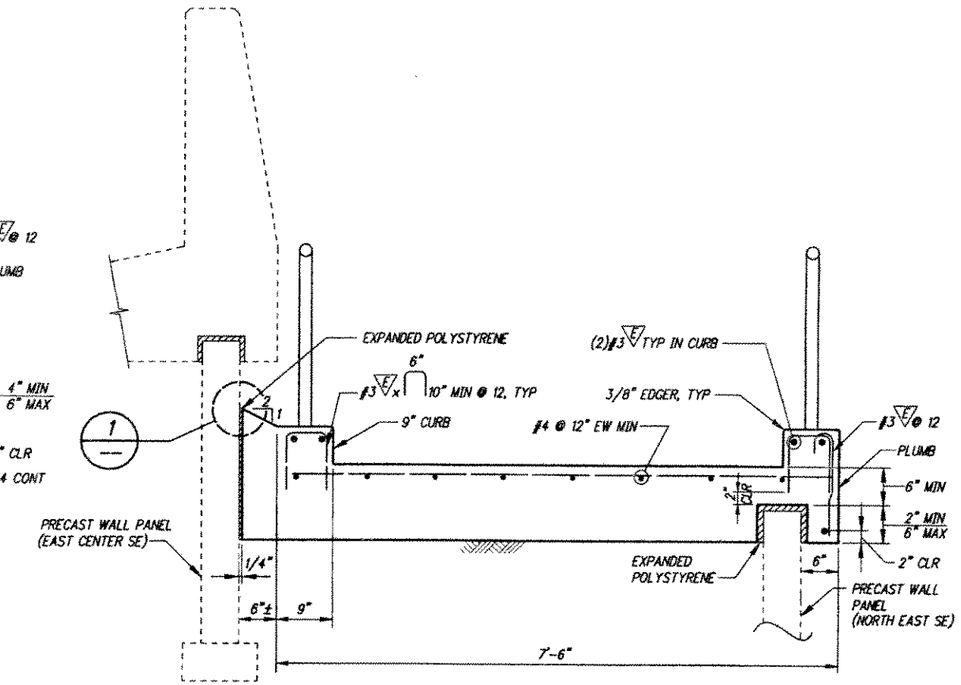

STAIR ON GRADE – SECTION (B / S28)

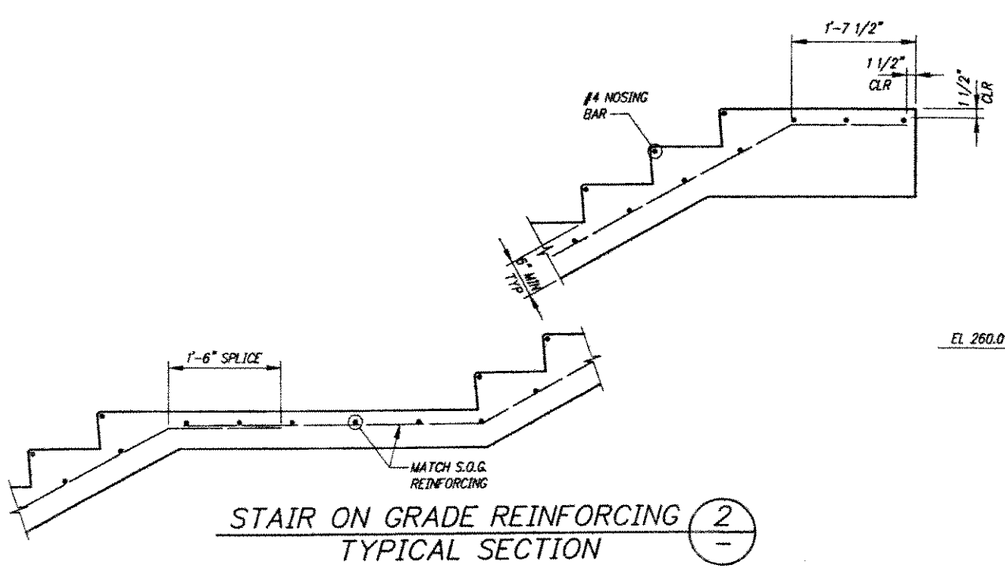

STAIR ON GRADE REINFORCING (2)
TYPICAL SECTION

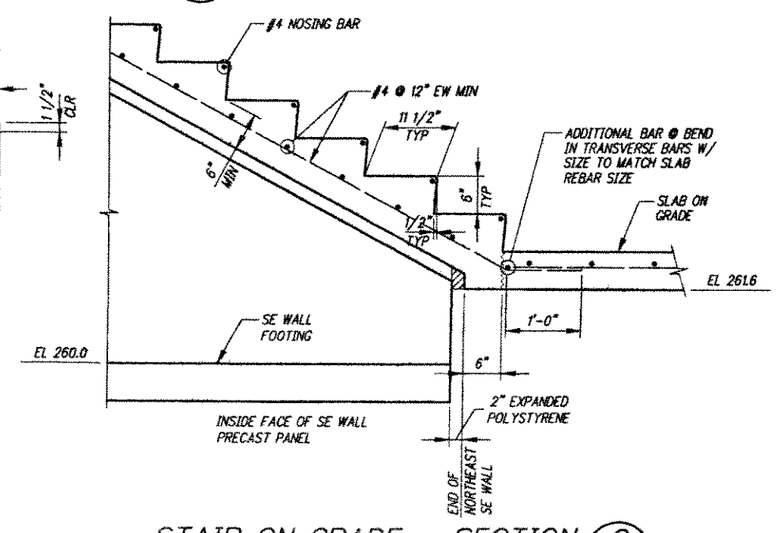

STAIR ON GRADE – SECTION (C / S28)

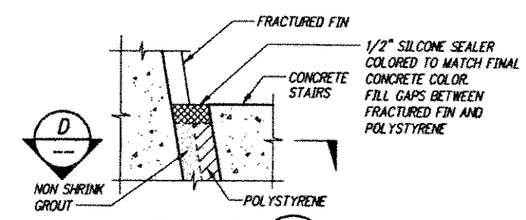

DETAIL (1)

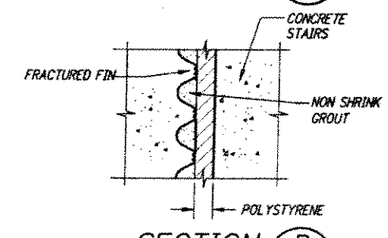

SECTION (D)

kpff Consulting Engineers
1201 Third Avenue, Suite 900
Seattle, Washington 98101
(206) 622-5822 Fax (206) 622-8130

CALL 48 HOURS BEFORE YOU DIG 1-800-424-5555

FILE	ENGR.	REVIEW	SCALE	DATE
	JEM	IH	SHOWN	

NO.	REVISION	BY	REVIEW	DATE

CITY OF KIRKLAND WASHINGTON

CITY OF KIRKLAND
PUBLIC WORKS DEPARTMENT
123 FIFTH AVENUE – KIRKLAND, WA 98033-6189 – (425) 828-1243

N.E. 100TH STREET BRIDGE
EAST STAIR REINFORCING
PLAN AND SECTIONS

SHEET
S29

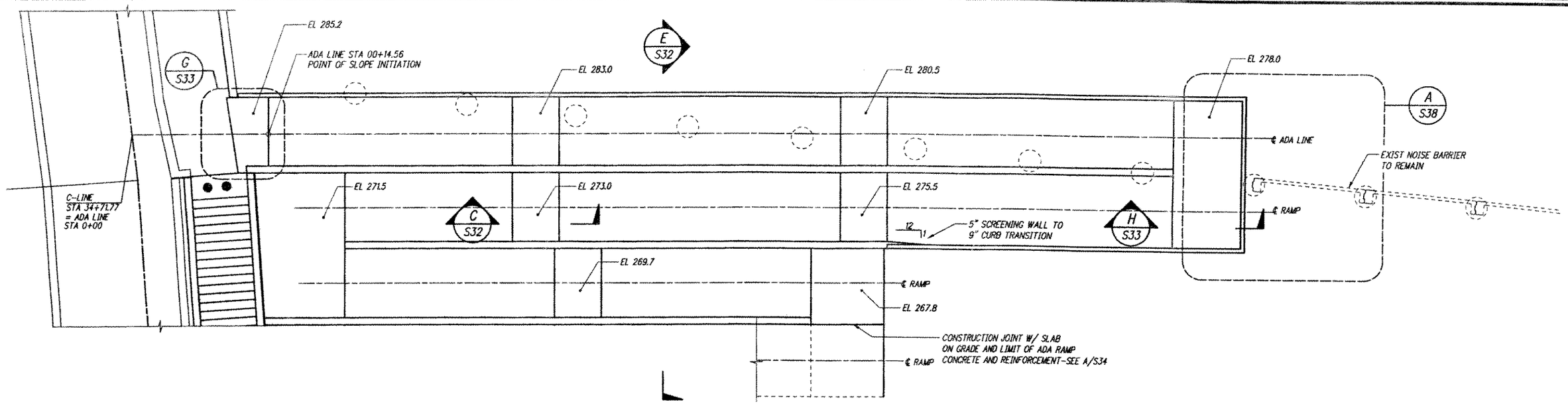

ADA RAMP PLAN

NOTE: RAMP ELEVATIONS AT TOP OF DECK AT CURB LINE

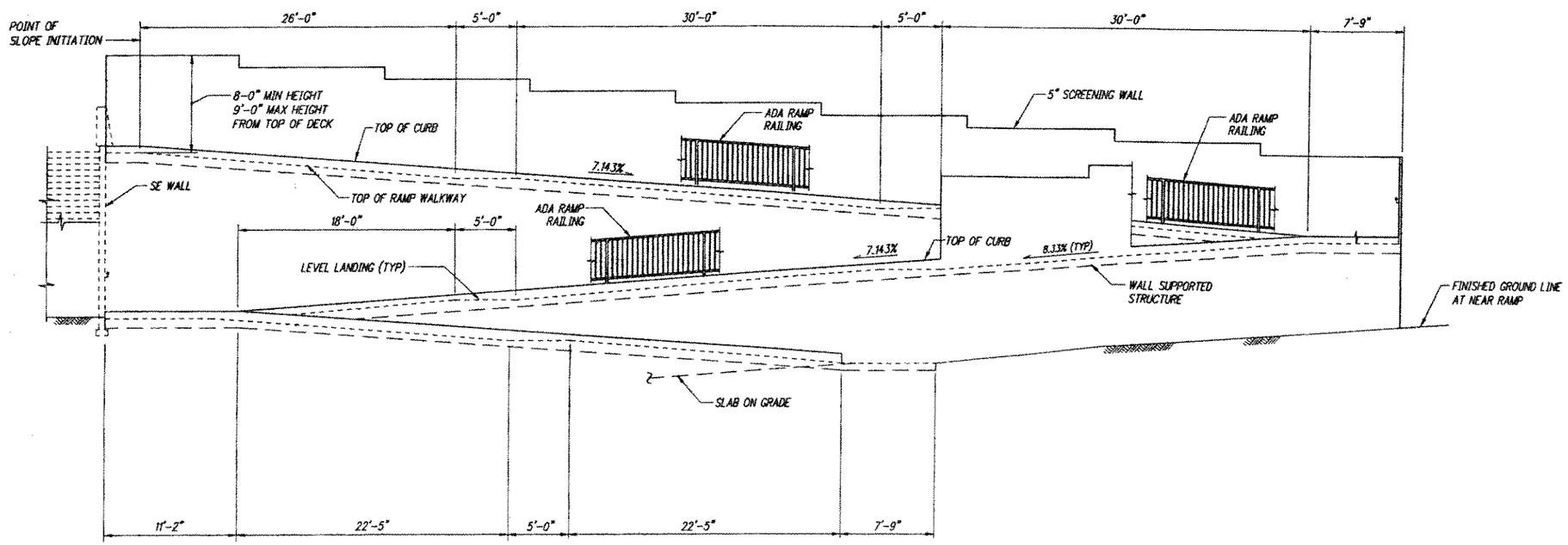

ADA RAMP ELEVATION

LOOKING WEST

kpff Consulting Engineers
1201 Third Avenue, Suite 900
Seattle, Washington 98101
(206) 622-5822 Fax (206) 622-8130

CALL 48 HOURS
BEFORE YOU DIG
1-800-424-5555

FILE	ENGR.	REVIEW	SCALE	DATE
	JEM	IH	SHOWN	

NO.	REVISION	BY	REVIEW	DATE

CITY OF KIRKLAND
PUBLIC WORKS DEPARTMENT
123 FIFTH AVENUE – KIRKLAND, WA 98033-6189 – (425) 828-1243

N.E. 100TH STREET BRIDGE

EAST ADA RAMP PLAN & ELEVATION

SHEET
S30

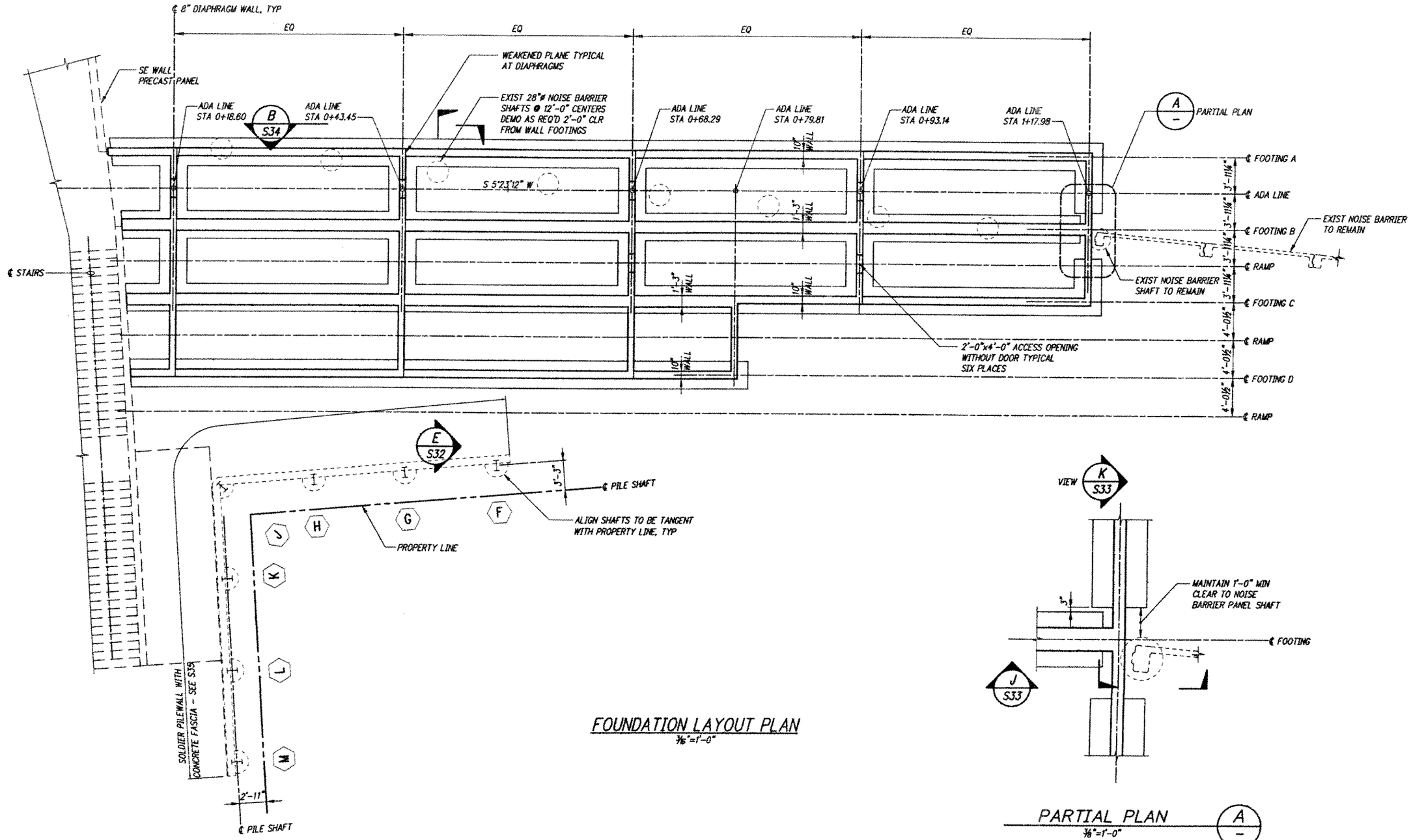

FOUNDATION LAYOUT PLAN
3/16"=1'-0"

PARTIAL PLAN A
3/8"=1'-0"

kpff Consulting Engineers
1201 Third Avenue, Suite 900
Seattle, Washington 98101
(206) 622-5822 Fax (206) 622-8130

CALL 48 HOURS BEFORE YOU DIG 1-800-424-5555

RICHARD K. JOHNSON STATE OF WASHINGTON REGISTERED PROFESSIONAL ENGINEER
EXPIRES 9/30/

FILE	ENGR.	REVIEW	SCALE	DATE
	JEM	IH	SHOWN	

NO.	REVISION	BY	REVIEW	DATE

CITY OF KIRKLAND WASHINGTON

CITY OF KIRKLAND
PUBLIC WORKS DEPARTMENT
123 FIFTH AVENUE - KIRKLAND, WA 98033-6189 - (425) 828-1243

N.E. 100TH STREET BRIDGE
EAST ADA RAMP
FOUNDATION LAYOUT

SHEET
S31

XREFS: JOHNSON, 100XIB,

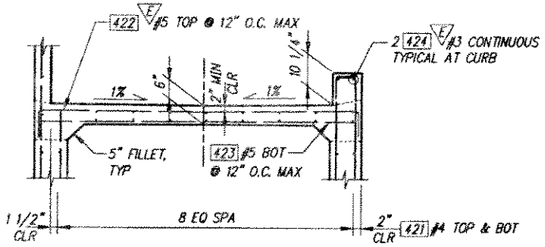

SECTION A

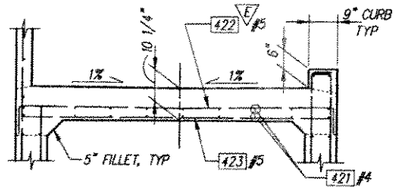

SECTION B

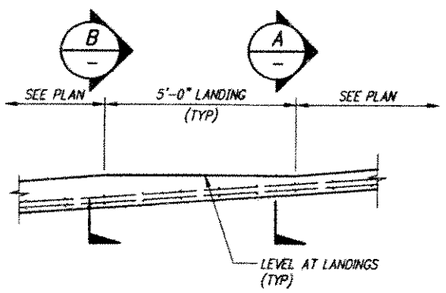

SECTION C S30

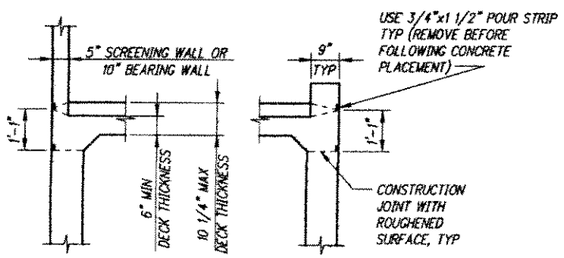

DECK DETAIL

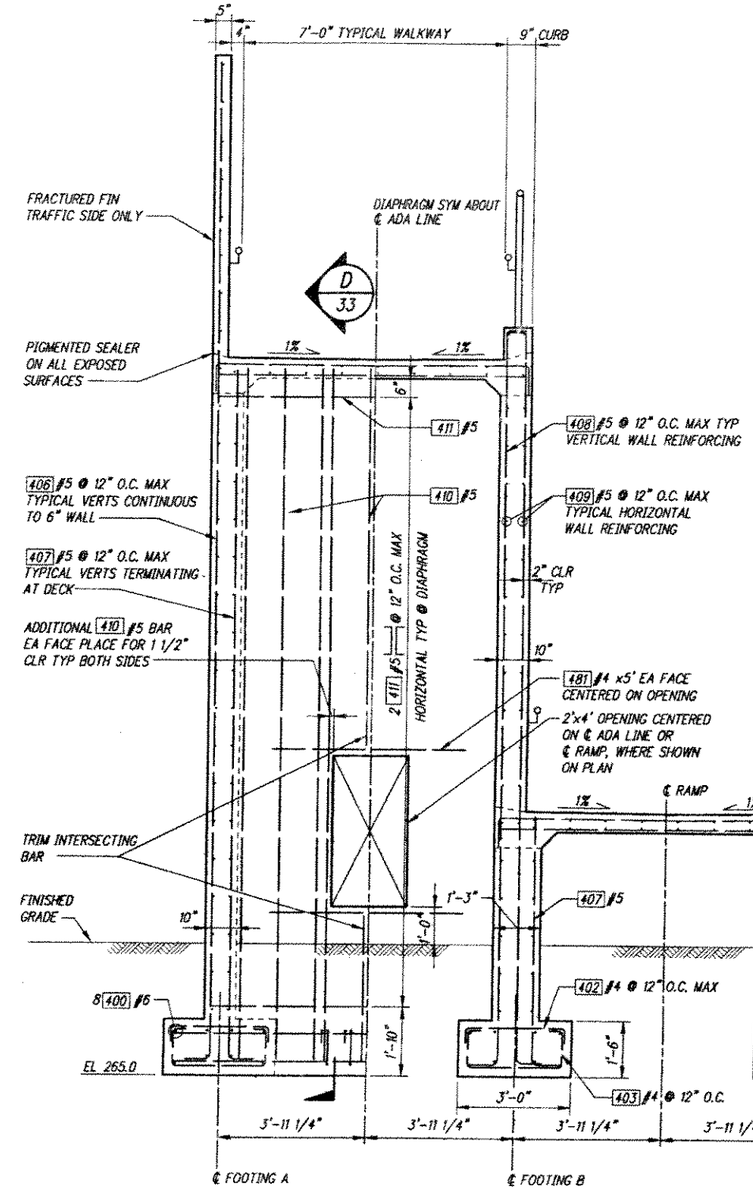

SECTION E S30, 31

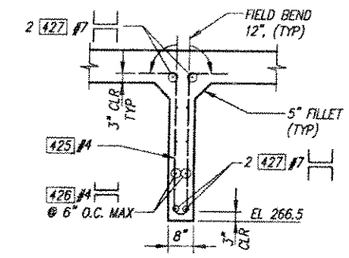

SECTION F

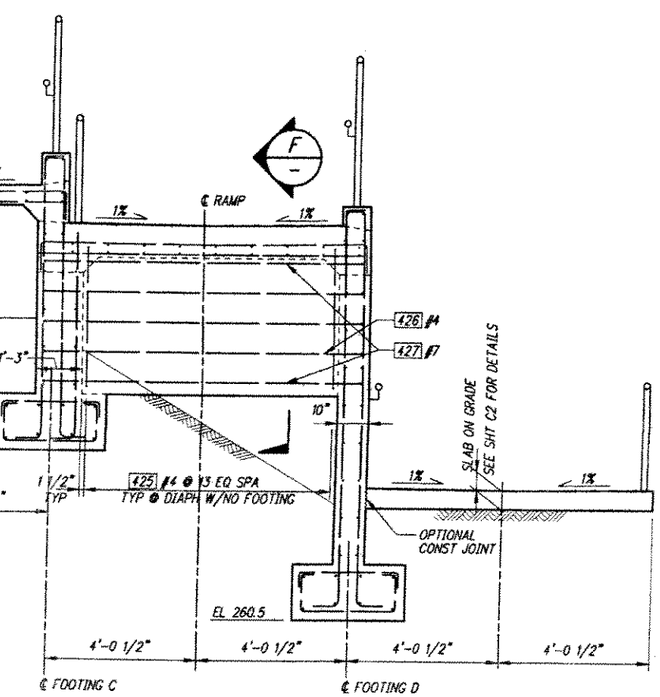

SECTION E S30, 31

kpff Consulting Engineers
1201 Third Avenue, Suite 900
Seattle, Washington 98101
(206) 622-5822 Fax (206) 622-8130

CALL 48 HOURS BEFORE YOU DIG 1-800-424-5555

RICHARD K. HANSON STATE OF WASHINGTON 24017 REGISTERED PROFESSIONAL ENGINEER
EXPIRES 9/10/92

FILE	ENGR.	REVIEW	SCALE	DATE
	JEM	IH	SHOWN	

NO.	REVISION	BY	REVIEW	DATE

CITY OF KIRKLAND WASHINGTON

CITY OF KIRKLAND
PUBLIC WORKS DEPARTMENT
123 FIFTH AVENUE – KIRKLAND, WA 98033-6189 – (425) 828-1243

N.E. 100TH STREET BRIDGE

ADA RAMP SECTIONS & DETAILS I

SHEET S32

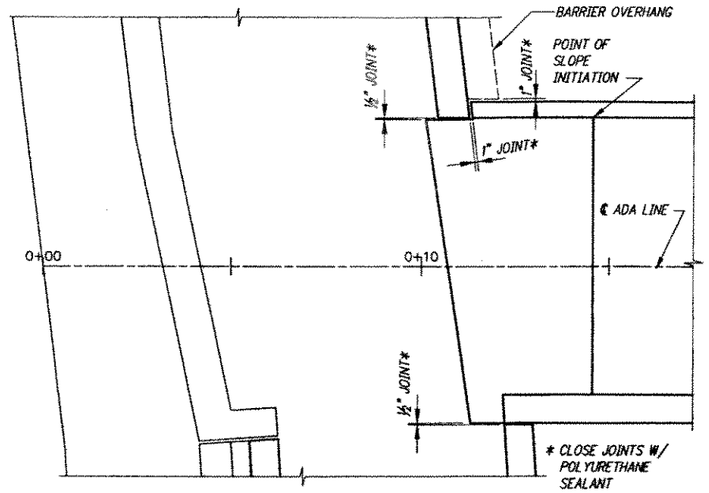

PLAN G S30

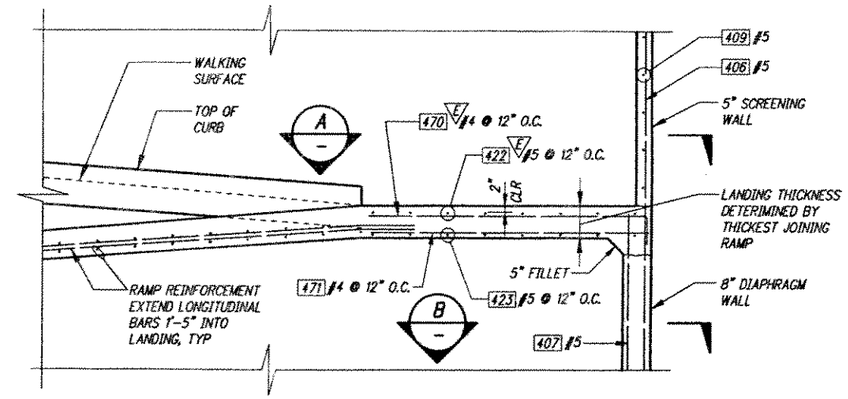

SECTION H S30

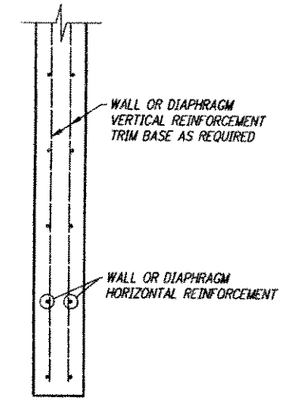

WALL BETWEEN FOOTINGS J -, S31

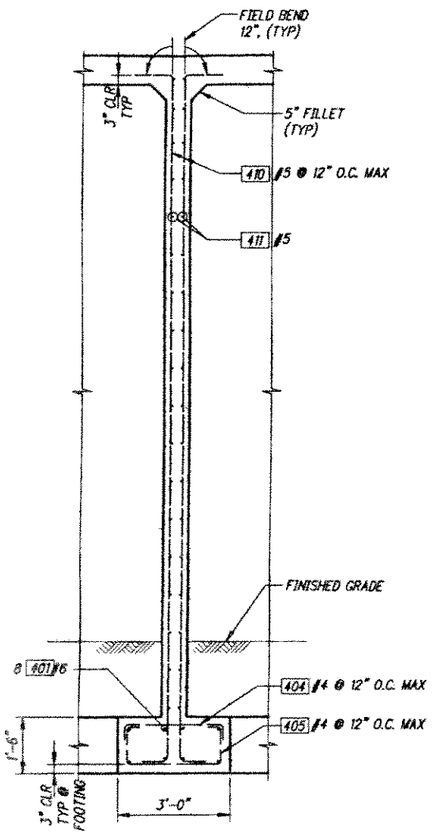

SECTION D 32

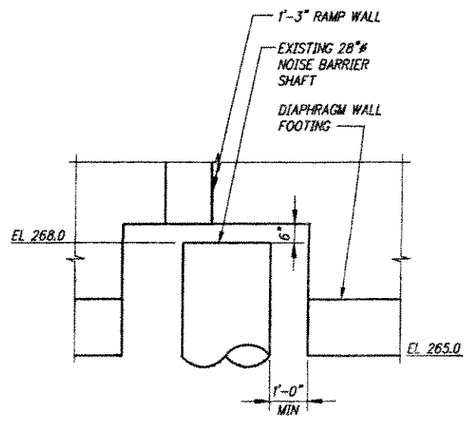

VIEW K S31

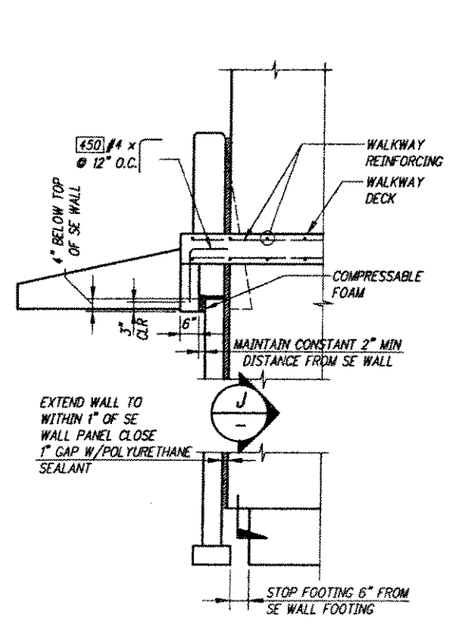

SECTION L -

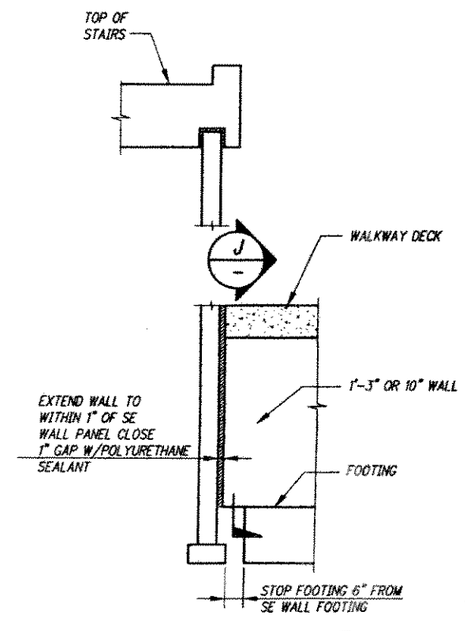

SECTION M -

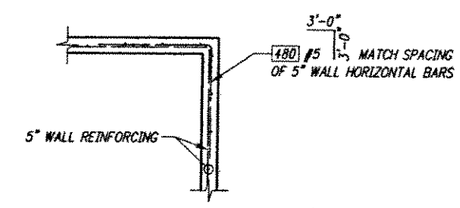

SECTION A -

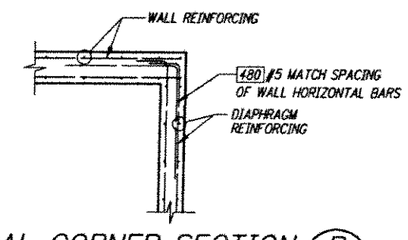

TYPICAL CORNER SECTION B -

kpff Consulting Engineers
1201 Third Avenue, Suite 900
Seattle, Washington 98101
(206) 622-5822 Fax (206) 622-8130

CALL 48 HOURS BEFORE YOU DIG 1-800-424-5555

RICHARD K. JOHNSON STATE OF WASHINGTON 24861 REGISTERED PROFESSIONAL ENGINEER
EXPIRES 9/30/07

FILE	ENGR.	REVIEW	SCALE	DATE
	JEM	IH	SHOWN	

NO.	REVISION	BY	REVIEW	DATE

CITY OF KIRKLAND WASHINGTON

CITY OF KIRKLAND
PUBLIC WORKS DEPARTMENT
123 FIFTH AVENUE – KIRKLAND, WA 98033-6189 – (425) 828-1243

N.E. 100TH STREET BRIDGE

ADA RAMP SECTIONS & DETAILS II

SHEET S33

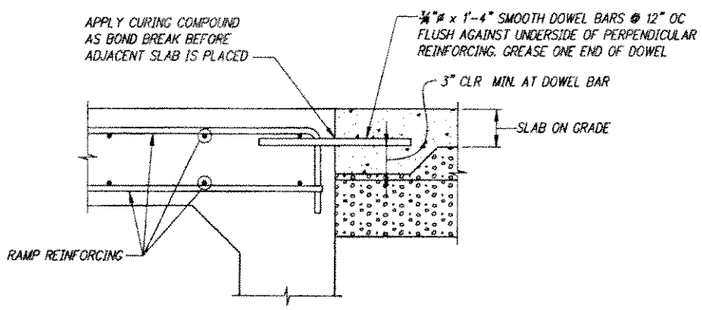

JOINT WITH SLAB ON GRADE (A / S30)

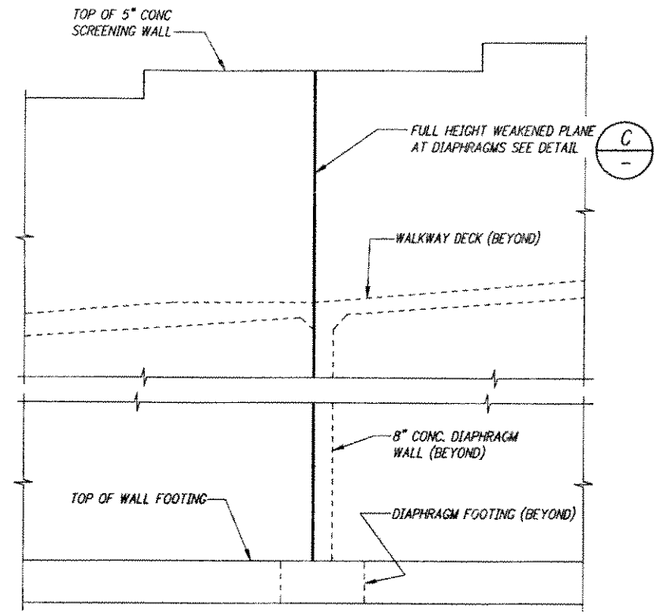

WEAKENED PLANE (B / S31)

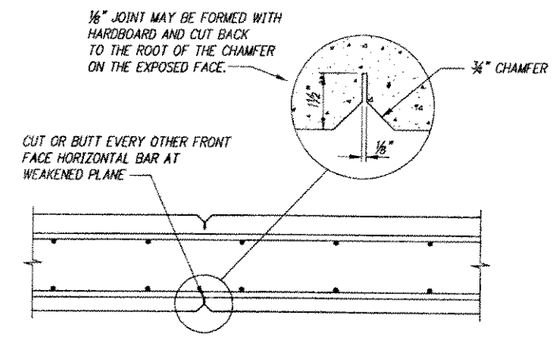

WEAKENED PLANES DETAIL (C / –)

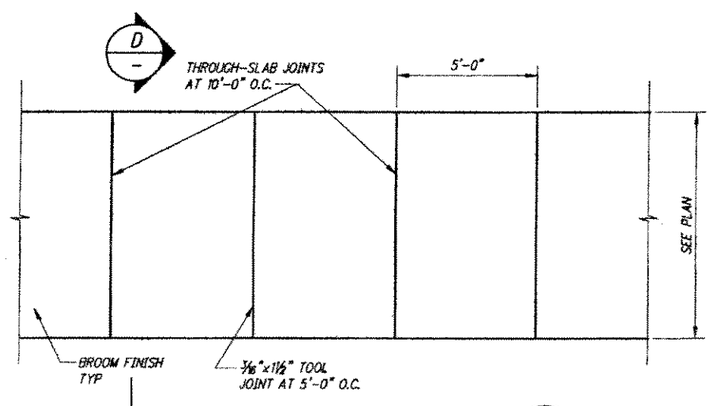

SLAB ON GRADE PLAN (1 / –)

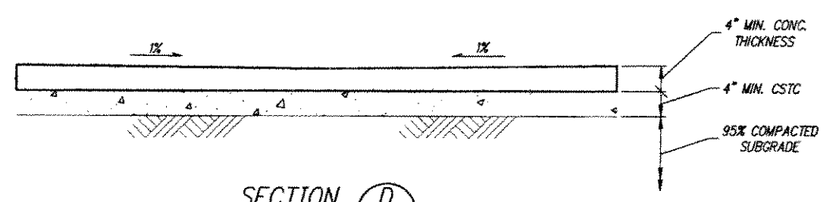

SECTION (D / –)

SLAB ON GRADE NOTES:

1. CONCRETE SHALL BE CEMENT CONCRETE CLASS 4000 PSI MINIMUM, WITH AIR ENTRAINMENT.
2. FORMS SHALL BE SET TRUE TO LINE AND GRADE AND SHALL BE STEEL UNLESS OTHERWISE APPROVED BY INSPECTOR.
3. SIDEWALK SHALL NOT BE PLACED IN THE RAIN. SEE C.O.K. POLICY. SECTION-PLACING CONCRETE OR SAPHALT IN ADVERSE WEATHER CONDITIONS.

kpff Consulting Engineers
1201 Third Avenue, Suite 900
Seattle, Washington 98101
(206) 622-5822 Fax (206) 622-8130

CALL 48 HOURS BEFORE YOU DIG 1-800-424-5555

FILE	ENGR.	REVIEW	SCALE	DATE
	JEM	IH	SHOWN	

NO.	REVISION	BY	REVIEW	DATE

CITY OF KIRKLAND WASHINGTON

CITY OF KIRKLAND
PUBLIC WORKS DEPARTMENT
123 FIFTH AVENUE – KIRKLAND, WA 98033-6189 – (425) 828-1243

N.E. 100TH STREET BRIDGE

ADA RAMP DETAILS

SHEET S34

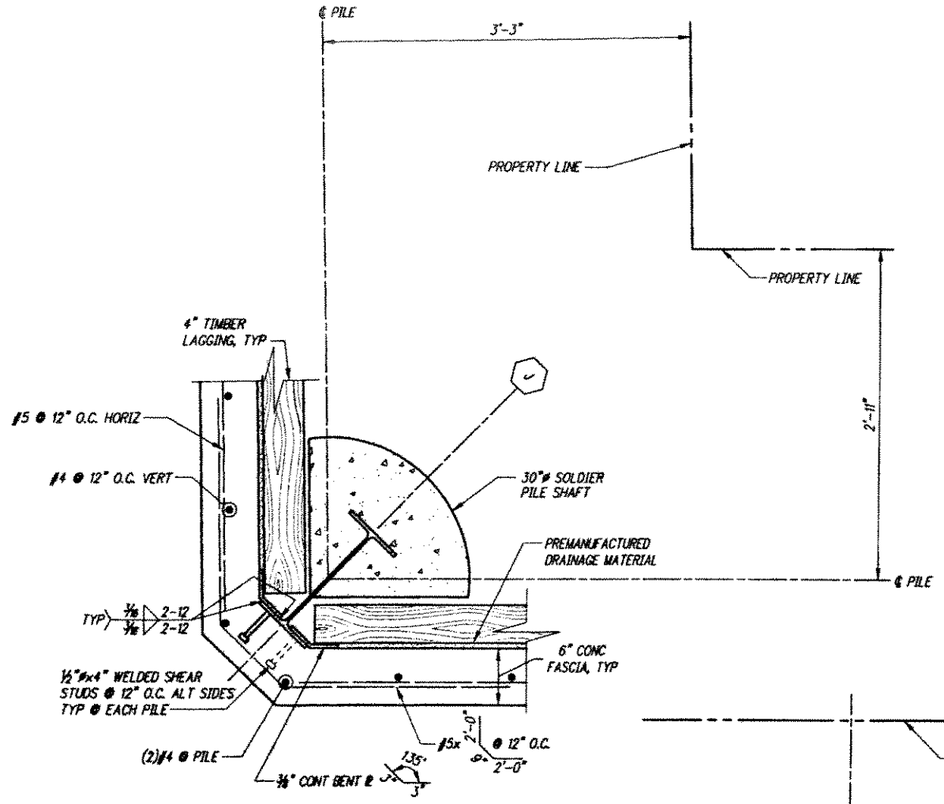

SECTION AT CORNER PILE (A)
1½"=1'-0"

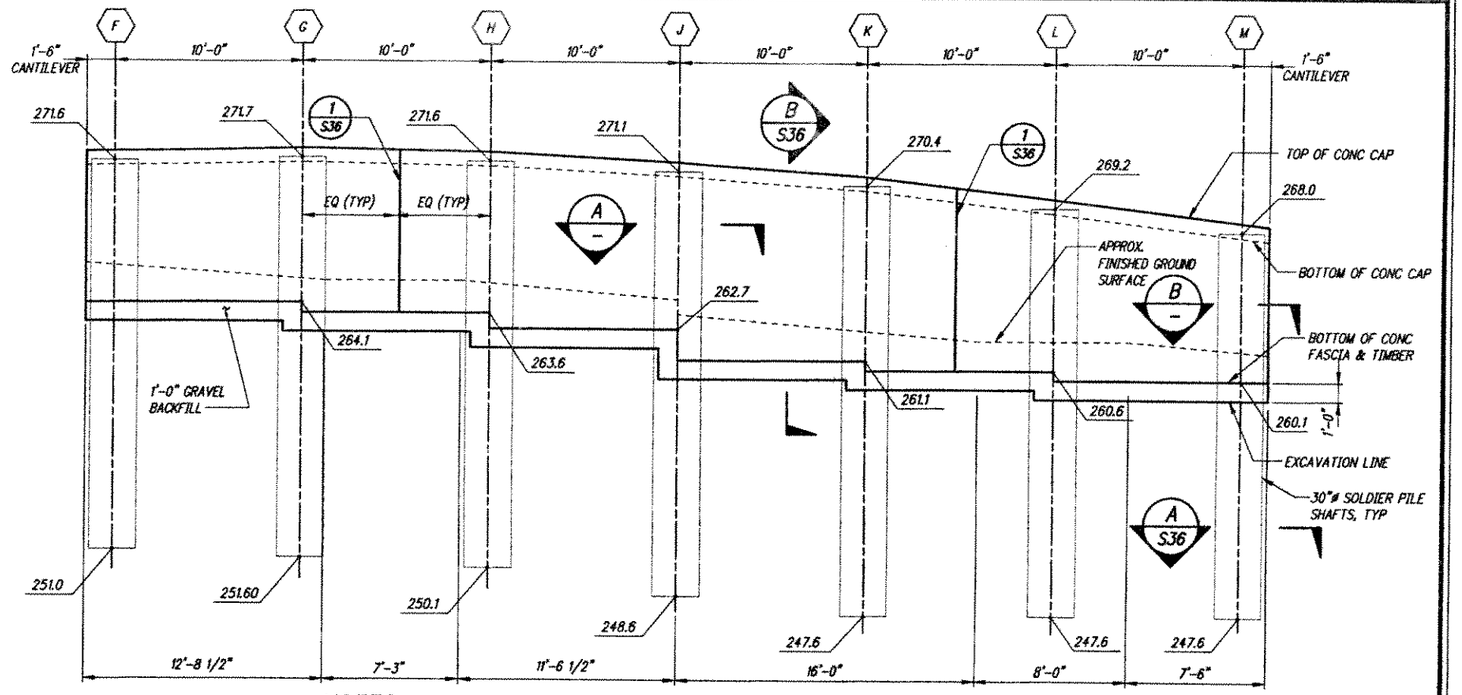

NOTES:

1. DIMENSIONS MEASURED AT PILE ℄.
2. FOR STATIC SOIL PRESSURE DIAGRAM, SEE SHEET S36.
3. FOR PLAN OF WALL, SEE SHEET S31.

PILE WALL ELEVATION
¼"=1'-0"

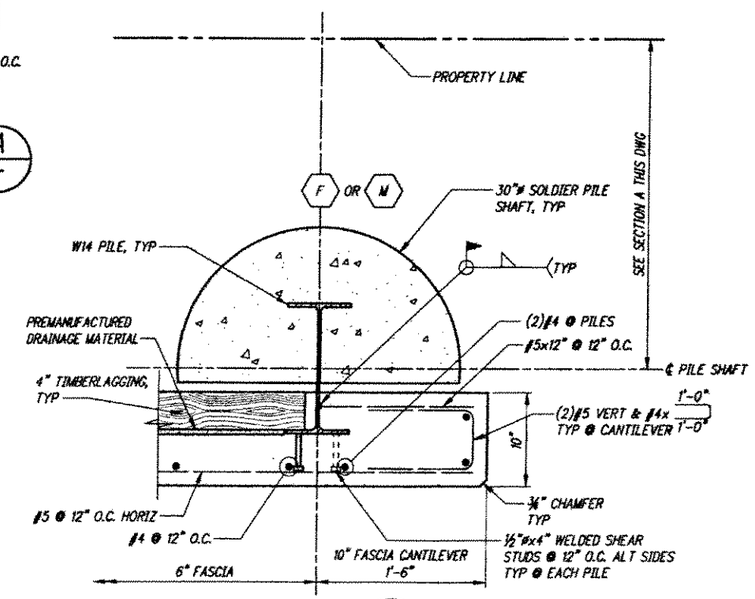

SECTION (B)
1½"=1'-0"

kpff Consulting Engineers
1201 Third Avenue, Suite 900
Seattle, Washington 98101
(206) 622-5822 Fax (206) 622-8130

CALL 48 HOURS BEFORE YOU DIG 1-800-424-5555

FILE	ENGR.	REVIEW	SCALE	DATE
	JEM	IH	SHOWN	

NO.	REVISION	BY	REVIEW	DATE

CITY OF KIRKLAND WASHINGTON

CITY OF KIRKLAND
PUBLIC WORKS DEPARTMENT
123 FIFTH AVENUE – KIRKLAND, WA 98033-6189 – (425) 828-1243

N.E. 100TH STREET BRIDGE

PILE WALL ELEVATION & DETAILS

SHEET S35

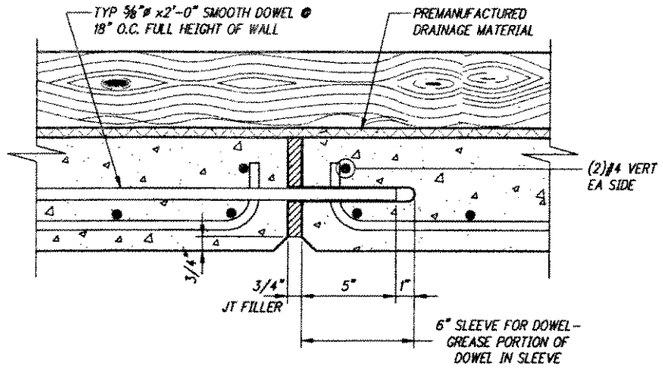

EXPANSION JOINT IN CONC FASCIA (1 / S35)
3"=1'-0"

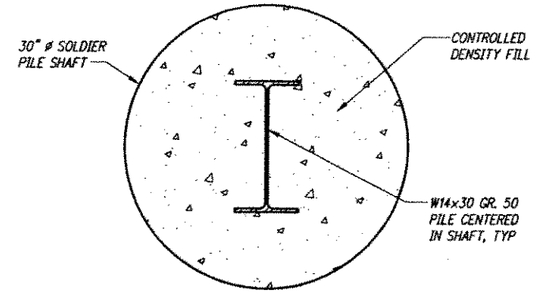

SECTION (A / S35)
1½"=1'-0"

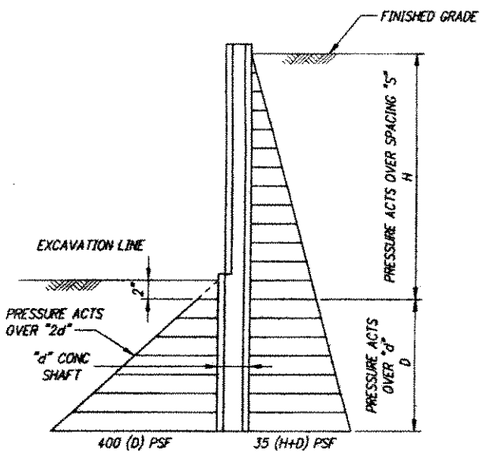

STATIC SOIL PRESSURE DIAGRAM

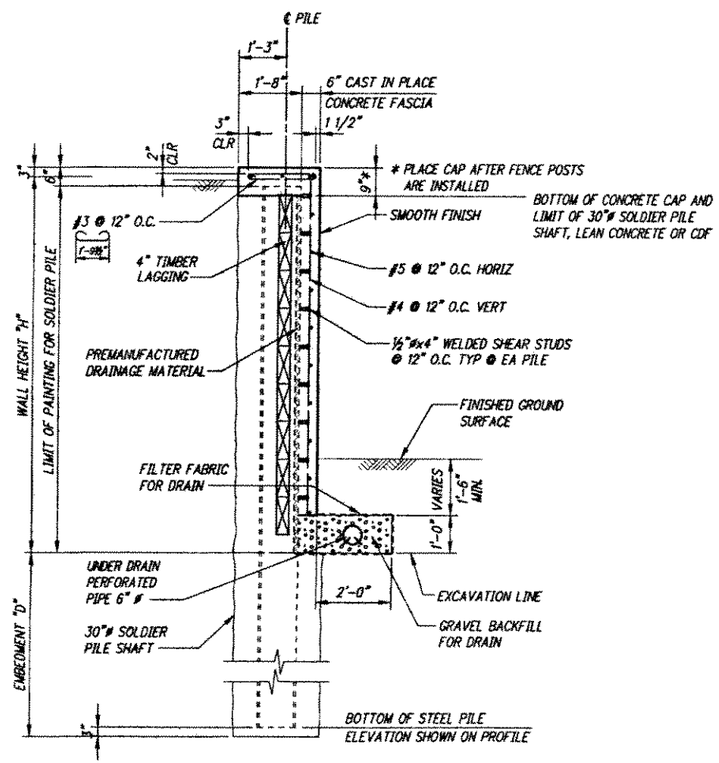

PILE WALL SECTION (B / S35)
½"=1'-0"

kpff Consulting Engineers
1201 Third Avenue, Suite 900
Seattle, Washington 98101
(206) 622-5822 Fax (206) 622-8130

CALL 48 HOURS BEFORE YOU DIG 1-800-424-5555

RICHARD K. JOHNSON, STATE OF WASHINGTON, REGISTERED PROFESSIONAL ENGINEER
EXPIRES 9/30/07

FILE	ENGR.	REVIEW	SCALE	DATE
	JEM	IH	SHOWN	

NO.	REVISION	BY	REVIEW	DATE

CITY OF KIRKLAND WASHINGTON

CITY OF KIRKLAND
PUBLIC WORKS DEPARTMENT
123 FIFTH AVENUE - KIRKLAND, WA 98033-6189 - (425) 828-1243

N.E. 100TH STREET BRIDGE

PILE WALL DETAILS II

SHEET S36

REFS: LEIMKUHL, JOHNSON, 100X18,

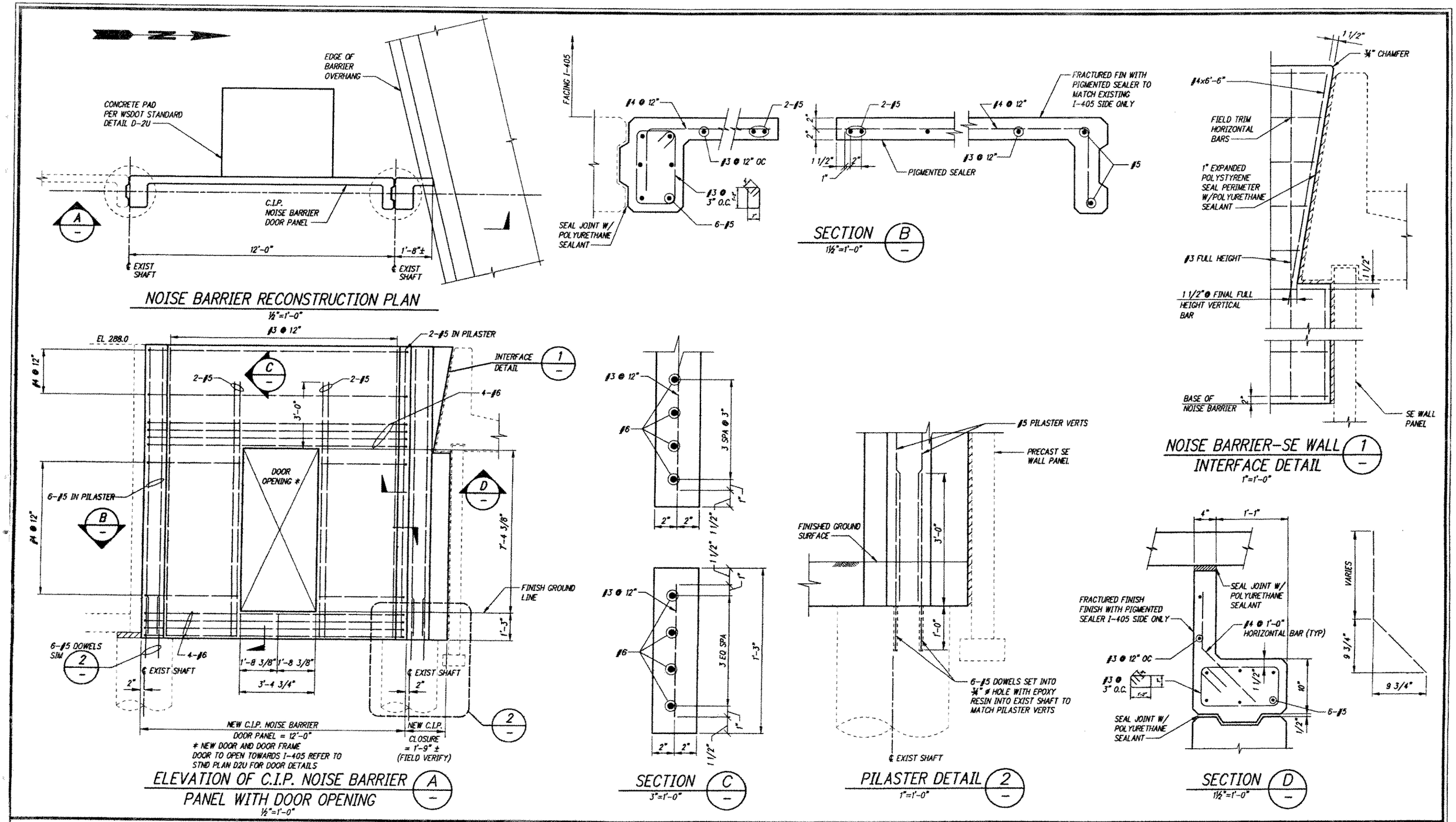

kpff Consulting Engineers
1201 Third Avenue, Suite 900
Seattle, Washington 98101
(206) 622-5822 Fax (206) 622-8130

CALL 48 HOURS BEFORE YOU DIG 1-800-424-5555

FILE	ENGR.	REVIEW	SCALE	DATE
	JEM	IH	SHOWN	

NO.	REVISION	BY	REVIEW	DATE

CITY OF KIRKLAND WASHINGTON

CITY OF KIRKLAND
PUBLIC WORKS DEPARTMENT
123 FIFTH AVENUE - KIRKLAND, WA 98033-6189 - (425) 828-1243

N.E. 100TH STREET BRIDGE

NOISEBARRIER RECONSTRUCTION DETAILS

SHEET S37

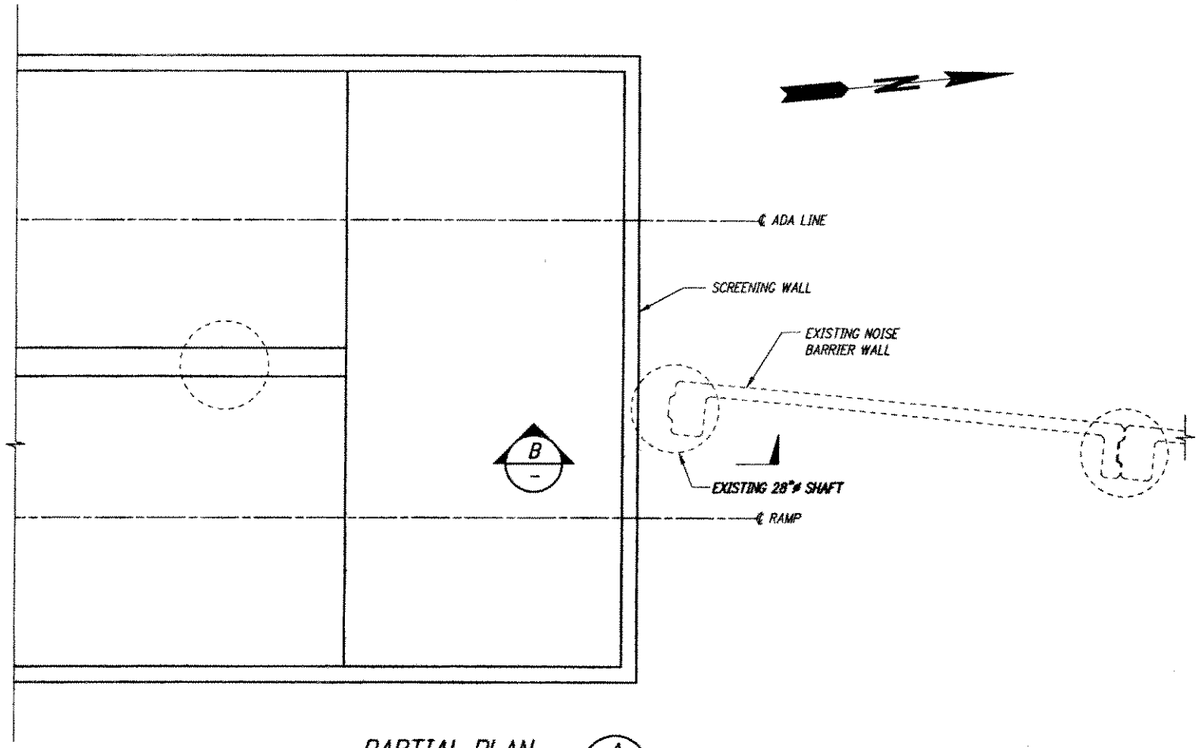

PARTIAL PLAN A

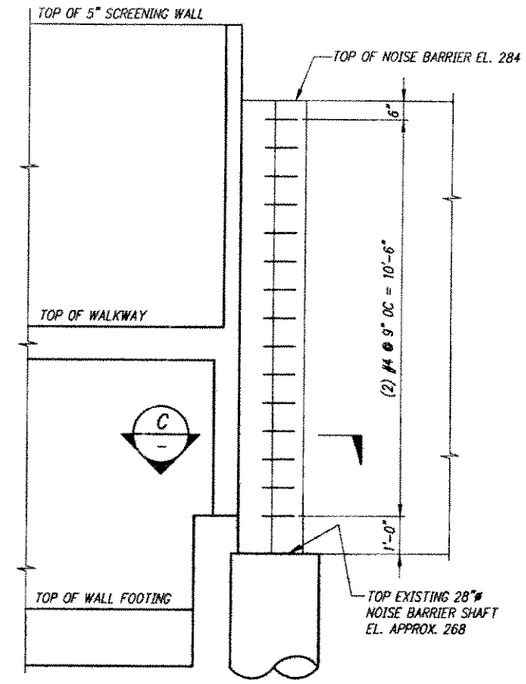

SECTION B

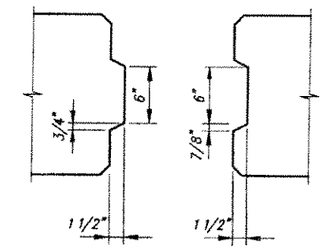

SHEARKEY DETAIL 1

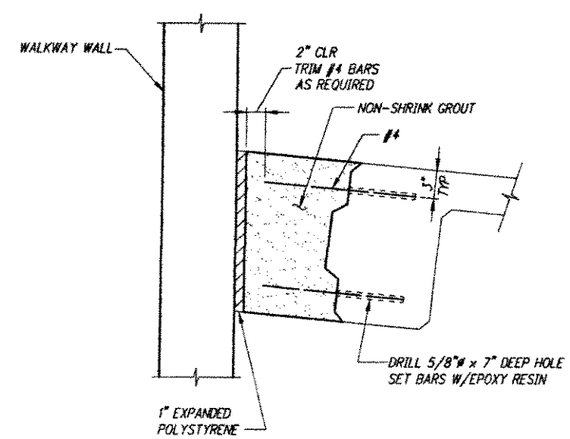

SECTION C

kpff Consulting Engineers
1201 Third Avenue, Suite 900
Seattle, Washington 98101
(206) 622-5822 Fax (206) 622-8130

CALL 48 HOURS BEFORE YOU DIG 1-800-424-5555

RICHARD K. JOHNSON STATE OF WASHINGTON 24890 REGISTERED PROFESSIONAL ENGINEER
EXPIRES 9/10/02

FILE	ENGR.	REVIEW	SCALE	DATE
	JEM	IH	SHOWN	

NO.	REVISION	BY	REVIEW	DATE

CITY OF KIRKLAND WASHINGTON

CITY OF KIRKLAND
PUBLIC WORKS DEPARTMENT
123 FIFTH AVENUE – KIRKLAND, WA 98033-6189 – (425) 828-1243

N.E. 100TH STREET BRIDGE

NOISEBARRIER RECONSTRUCTION DETAILS

SHEET S38

REFS: PLDALTZ, LEMKUHL, JOHNSON, 100X18,

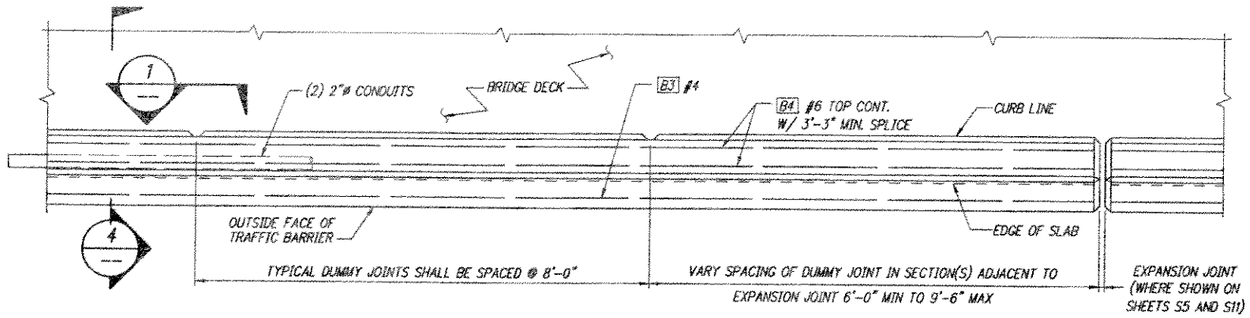

PLAN – TRAFFIC BARRIER

BARRIER CONTINUOUS BETWEEN ROADWAY EXPANSION JOINTS. CONSTRUCTION JOINTS WITH SHEAR KEYS ARE PERMISSIBLE AT DUMMY JOINT LOCATIONS. FORM JOINTS BETWEEN DUMMY JOINTS SHALL NOT BE PERMITTED.

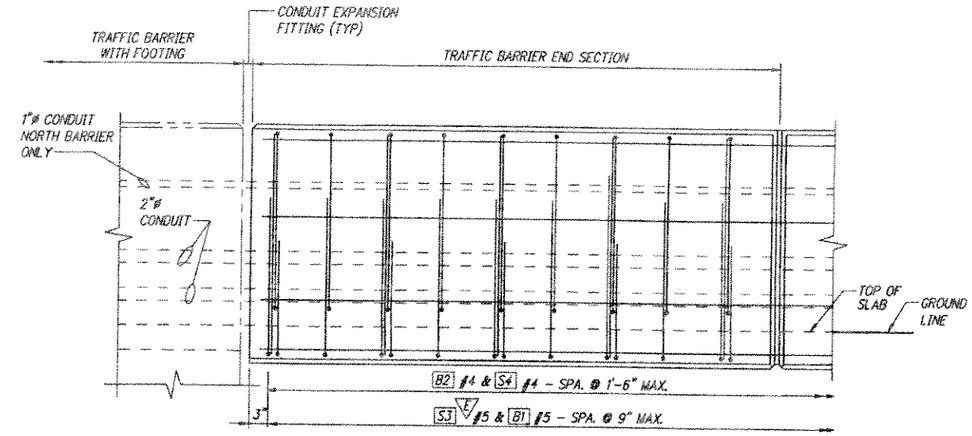

BARRIER OUTSIDE ELEVATION

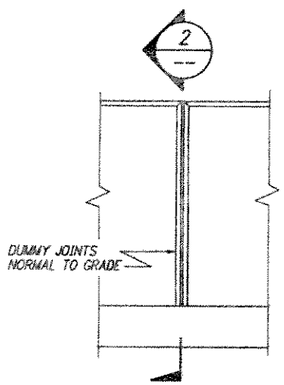

VIEW 1

ALL CHAMFERS ¾".

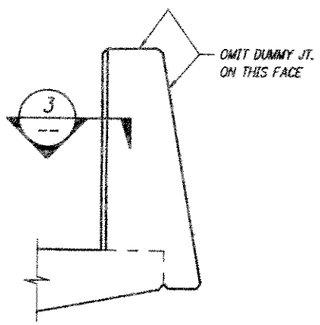

SECTION 2

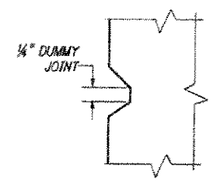

SECTION 3

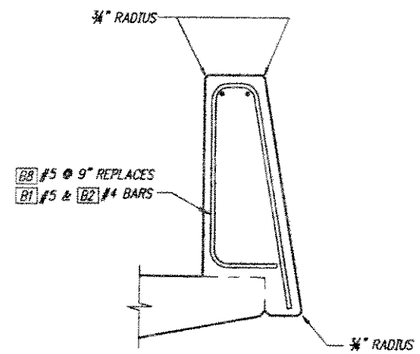

BARRIER SLIPFORM ALTERNATE

FOR ADDITIONAL DETAILS SEE 4

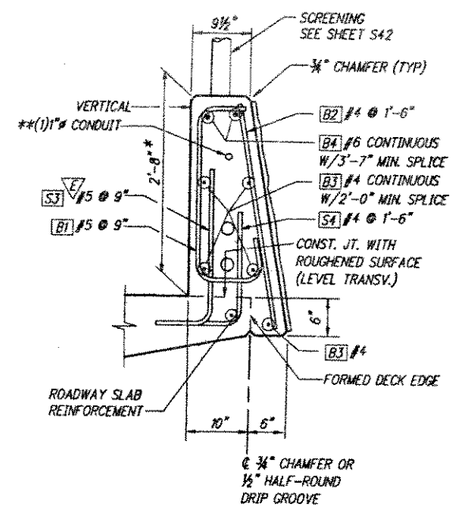

* MIN. HEIGHT. PEDESTRIAN BARRIER HEIGHT MAY VARY IF REQUIRED TO PROVIDE A SMOOTH PROFILE.

** ALL CONDUITS ARE IN NORTH BARRIER ONLY

TYPICAL BARRIER SECTION

SECTION 4

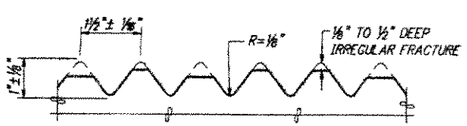

FRACTURED FIN FINISH

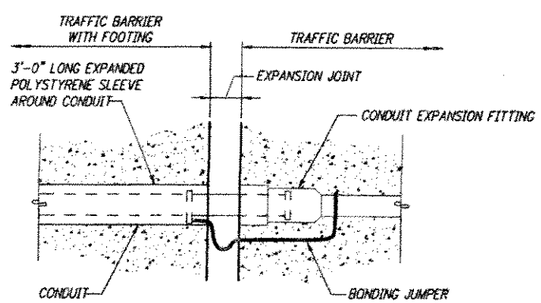

CONDUIT EXPANSION FITTING

CONDUIT FITTING TYPE AX OR EQUAL FOR MOVEMENT OF ± 2" MAX.

BARRIER BAR LIST

ALL REINFORCING SHALL BE AASHTO M 31, GR. 60.

MARK	SIZE	LENGTH	BENDING DIAGRAM (ALL DIMENSIONS ARE OUT TO OUT)
B1	5	(a)	
B2	4	3'-2"	STR.
B3	4	(a)	STR.
B4	6	(a)	STR.
B5	5	(a)	
B6	4	(a)	STR.
B7	4	(a)	
B8	5	(a)	

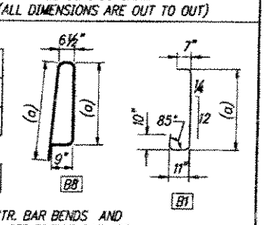

FOR STR. BAR BENDS AND SIZES, SEE BRIDGE BAR LIST.
(a) DETERMINE FROM PLANS
E EPOXY COATED

kpff Consulting Engineers
1201 Third Avenue, Suite 900
Seattle, Washington 98101
(206) 622-5822 Fax (206) 622-8130

CALL 48 HOURS BEFORE YOU DIG 1-800-424-5555

FILE	ENGR.	REVIEW	SCALE	DATE
	JEM	IH	SHOWN	

NO.	REVISION	BY	REVIEW	DATE

CITY OF KIRKLAND WASHINGTON

CITY OF KIRKLAND
PUBLIC WORKS DEPARTMENT
123 FIFTH AVENUE – KIRKLAND, WA 98033-6189 – (425) 828-1243

N.E. 100TH STREET BRIDGE

BRIDGE BARRIER DETAILS I

SHEET S39

LEMKUHL, JOHNSON, 100XTB,

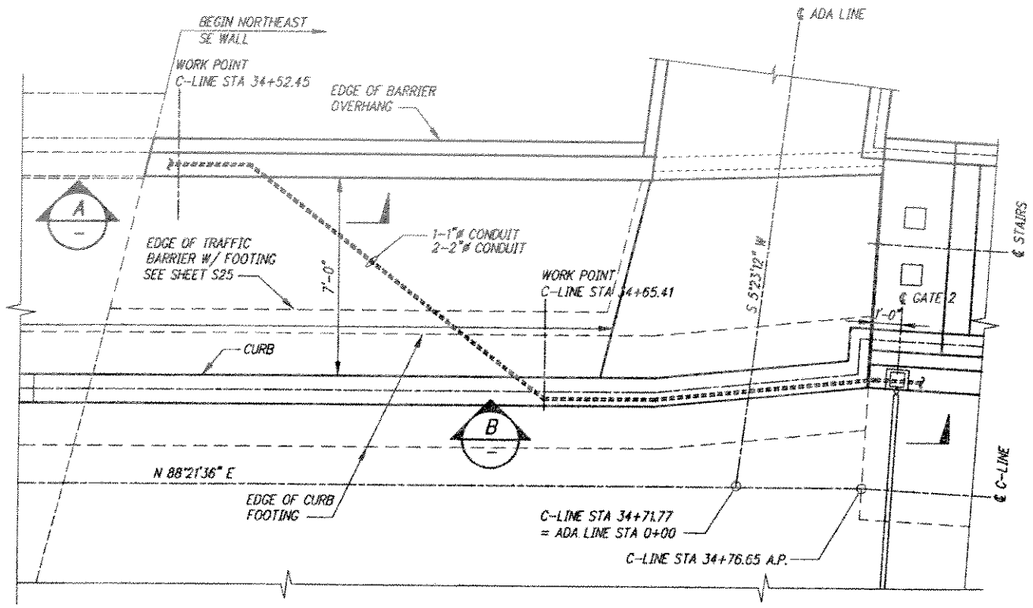

PLAN AT PIER 3 ABUTMENT APPROACH

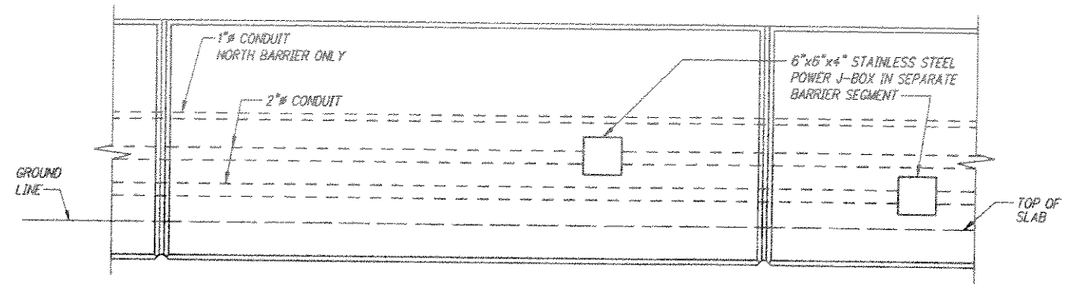

ELEVATION – CONDUIT IN TRAFFIC BARRIER (NORTH BARRIER ONLY)

NOTE: THE JUNCTION BOX SPACING SHALL NOT BE MORE THAN 195'-0" APART ON EACH CONDUIT

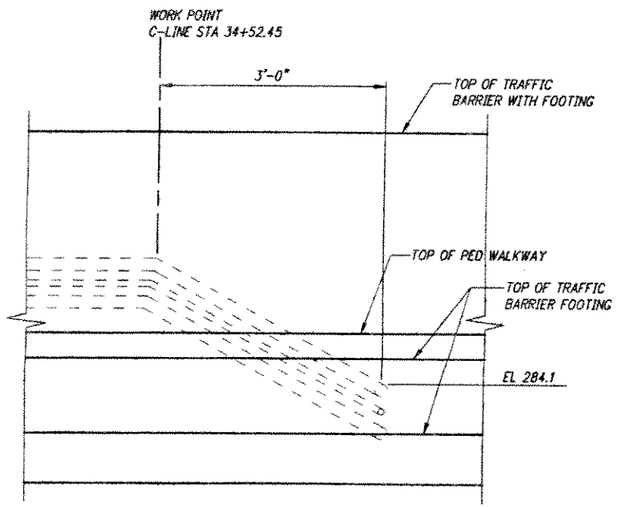

ELEVATION OF CONDUIT AT PIER 3 ABUTMENT APPROACH (A)

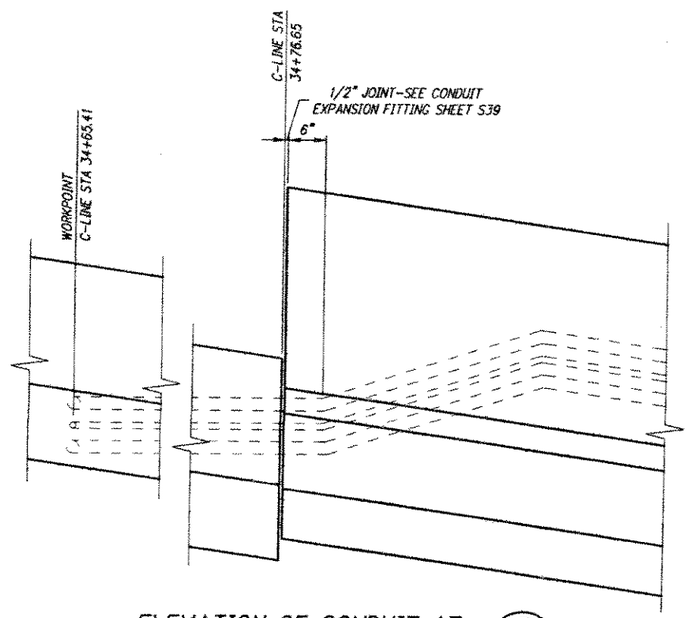

ELEVATION OF CONDUIT AT PIER 3 ABUTMENT APPROACH (B)

kpff Consulting Engineers
1201 Third Avenue, Suite 900
Seattle, Washington 98101
(206) 622-5822 Fax (206) 622-8130

CALL 48 HOURS BEFORE YOU DIG 1-800-424-5555

RICHARD K. JOHNSON STATE OF WASHINGTON 24677 REGISTERED PROFESSIONAL ENGINEER 04/01/02 EXPIRES 9/10/02

FILE	ENGR.	REVIEW	SCALE	DATE
	JEM	IH	SHOWN	

NO.	REVISION	BY	REVIEW	DATE

CITY OF KIRKLAND WASHINGTON

CITY OF KIRKLAND
PUBLIC WORKS DEPARTMENT
123 FIFTH AVENUE – KIRKLAND, WA 98033-6189 – (425) 828-1243

N.E. 100TH STREET BRIDGE

BRIDGE BARRIER DETAILS II

SHEET S40

LENWOLPHL, JOHNSOUR, 10/01/01

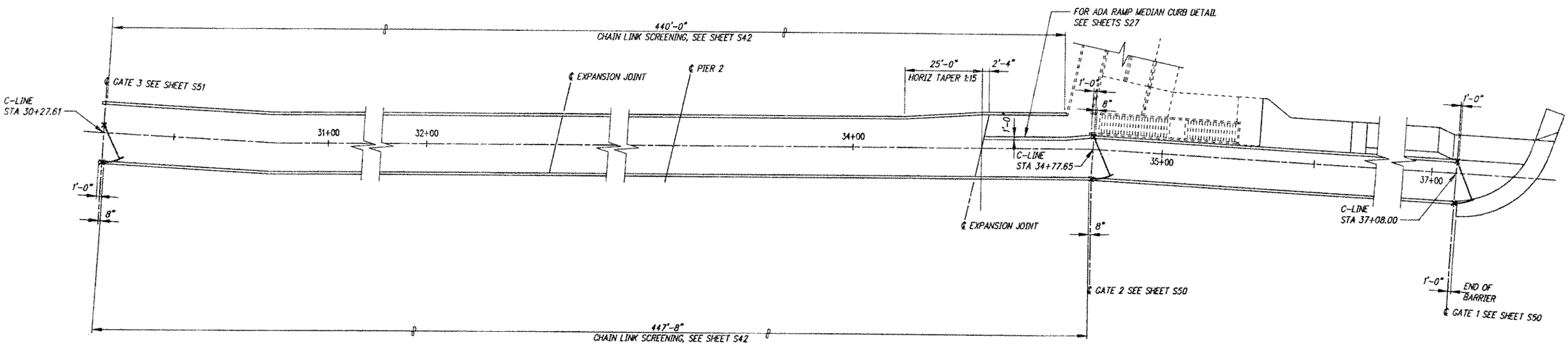

kpff Consulting Engineers
1201 Third Avenue, Suite 900
Seattle, Washington 98101
(206) 622-5822 Fax (206) 622-8130

CALL 48 HOURS
BEFORE YOU DIG
1-800-424-5555

FILE	ENGR.	REVIEW	SCALE	DATE
	JEM	IH	SHOWN	

NO.	REVISION	BY	REVIEW	DATE

CITY OF KIRKLAND
PUBLIC WORKS DEPARTMENT
123 FIFTH AVENUE – KIRKLAND, WA 98033-6189 – (425) 828-1243

N.E. 100TH STREET BRIDGE

BRIDGE SCREENING
RAILING, AND GATE PLAN

SHEET
S41

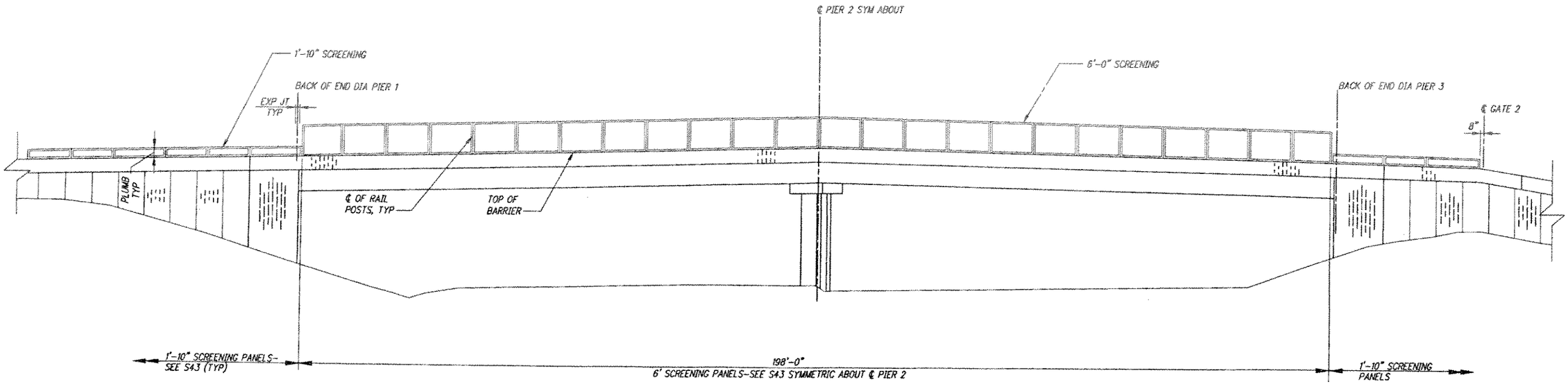

ELEVATION LOOKING NORTH

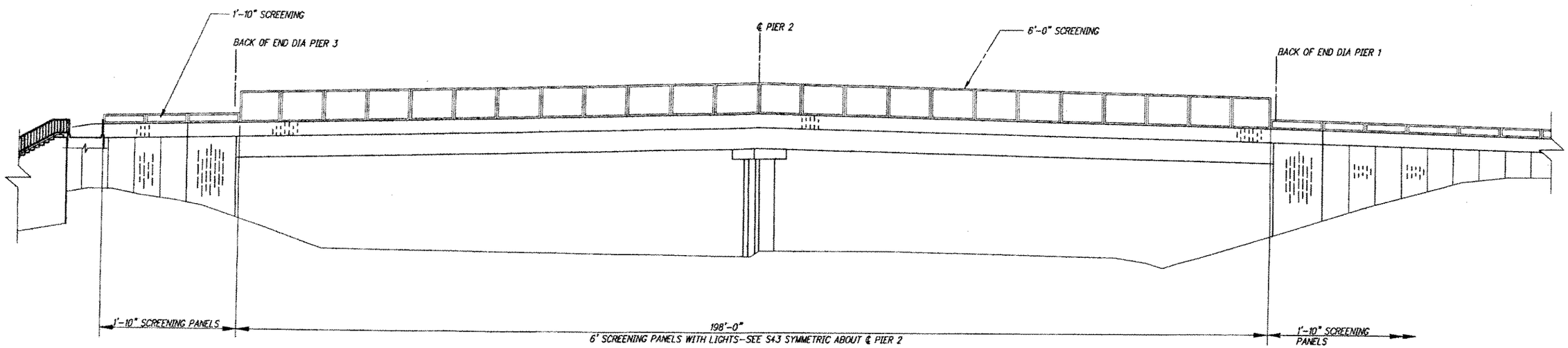

ELEVATION LOOKING SOUTH

kpff Consulting Engineers
1201 Third Avenue, Suite 900
Seattle, Washington 98101
(206) 622-5822 Fax (206) 622-8130

CALL 48 HOURS BEFORE YOU DIG 1-800-424-5555

RICHARD K. JOHNSON
STATE OF WASHINGTON
24687
REGISTERED PROFESSIONAL ENGINEER
EXPIRES 9/10/02

FILE	ENGR.	REVIEW	SCALE	DATE
	JEM	IH	SHOWN	

NO.	REVISION	BY	REVIEW	DATE

CITY OF KIRKLAND WASHINGTON

CITY OF KIRKLAND
PUBLIC WORKS DEPARTMENT
123 FIFTH AVENUE - KIRKLAND, WA 98033-6189 - (425) 828-1243

N.E. 100TH STREET BRIDGE

BRIDGE SCREENING ELEVATION

SHEET S42

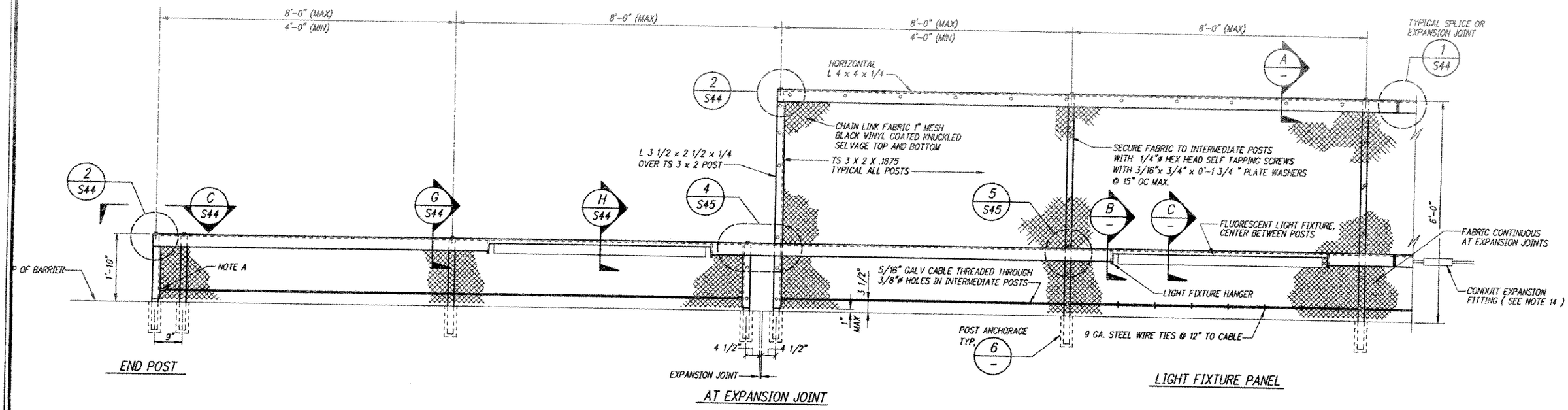

ELEVATION

NOTE A: ANCHOR 5/16" GALVANIZED CABLE AT END POST WITH 1/2"ø STUD SOCKET ASSEMBLY OR 1/2"ø WELDED EYEBOLT AND CRIMPED SLEEVE CLAMP. PROVIDE 1 1/2" MIN. TAKE-UP AT EACH ANCHORAGE.

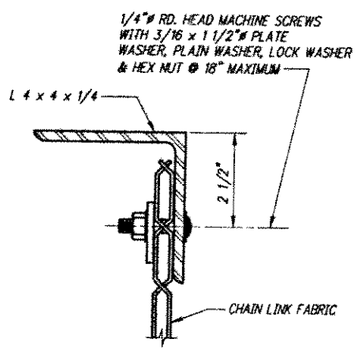

SECTION A

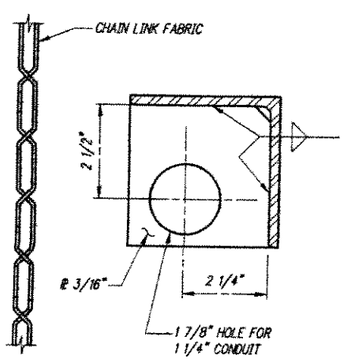

LIGHT FIXTURE HANGER – SECTION B

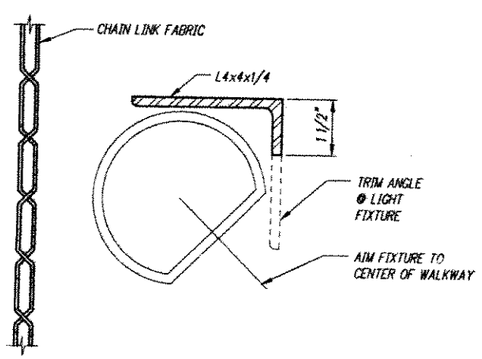

SECTION C

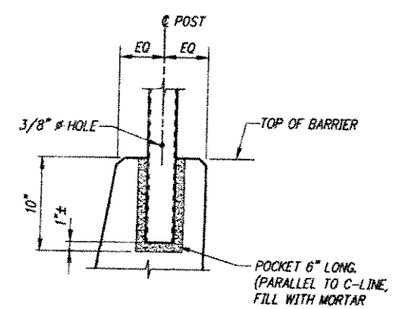

POST ANCHORAGE DETAIL 6

MAY BE USED WHEN THICKNESS OF CONCRETE IS 12" OR MORE. NOT TO BE USED WHEN POST CONTAINS ELECTRICAL CONDUIT.

NOTES:

1. RAILING ASSEMBLY EXCEPT CHAIN LINK FABRIC TO BE POWDER COATED AFTER FABRICATION.
2. RAILING SHALL CONFORM TO HORIZONTAL AND VERTICAL ALIGNMENT. POST SHALL BE VERTICAL. HORIZONTAL ANGLE SHALL BE BENT TO CONFORM TO HORIZONTAL ALIGNMENT IF RADIUS IS 150' OR LESS.
3. HORIZONTAL ANGLE SHALL BE CONTINUOUS OVER NOT LESS THAN TWO INTERMEDIATE POSTS, EXCEPT THAT A SHORTER LENGTH IS PERMITTED AT EXPANSION JOINTS AND OTHER RAIL DISCONTINUITIES.
4. WHEN RAILING IS PLACED ON CURVED HORIZONTAL ALIGNMENT WITH RADIUS OF 150' OR LESS, DRILL 1/2" x 3" DEEP HOLE IN SLAB AND SET IN EPOXY ADHESIVES 3/8" DIAMETER WELDED EYEBOLT FOR 5/16" CABLE TO LIMIT THE MIDORDINATE DISTANCE BETWEEN THE 5/16" CABLE AND CURVE TO BE 1" MAX.
5. PLACE FABRIC PARALLEL TO SLOPE.
6. ALTERNATIVE DETAILS MAY BE SUBMITTED BY THE CONTRACTOR FOR ENGINEER'S APPROVAL.
7. PROVIDE THIMBLES AT ALL CABLE LOOPS.
8. NOT USED
9. NEAR L 4x4 CONTINUOUS OVER TWO OR MORE SUPPORTS.
10. PEEN ALL EXPOSED BOLTS.
11. NOT USED
12. NOT USED
13. TS 2 x 2 x 0.1875 ON 6'-0" HIGH SECTION ONLY.
14. CONDUIT EXPANSION FITTING TO BE REQUIRED AT DECK OR WALL EXPANSION JOINTS WITH MOVEMENT RATINGS GREATER THAN 1 INCH.

kpff Consulting Engineers
1201 Third Avenue, Suite 900
Seattle, Washington 98101
(206) 622-5822 Fax (206) 622-8130

CALL 48 HOURS BEFORE YOU DIG 1-800-424-5555

RICHARD K. JOHNSON STATE OF WASHINGTON 24677 REGISTERED PROFESSIONAL ENGINEER 10/9/97
EXPIRES 9/30/97

FILE	ENGR.	REVIEW	SCALE	DATE
	JEM	IH	SHOWN	

NO.	REVISION	BY	REVIEW	DATE

CITY OF KIRKLAND WASHINGTON

CITY OF KIRKLAND
PUBLIC WORKS DEPARTMENT
123 FIFTH AVENUE – KIRKLAND, WA 98033-6189 – (425) 828-1243

N.E. 100TH STREET BRIDGE

CHAIN LINK RAILING TYPE 7L DETAILS 1

SHEET S43

LANDS: LEMAHIEU, JOHNSON, TOUKIB.

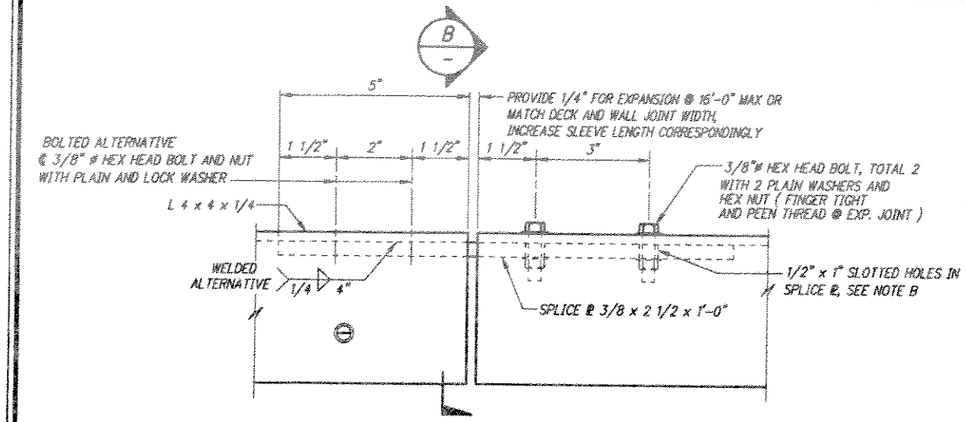

SPLICE OR EXPANSION JOINT DETAIL (1 / S43)

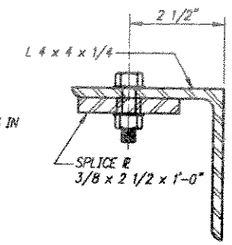

SECTION (B / –)

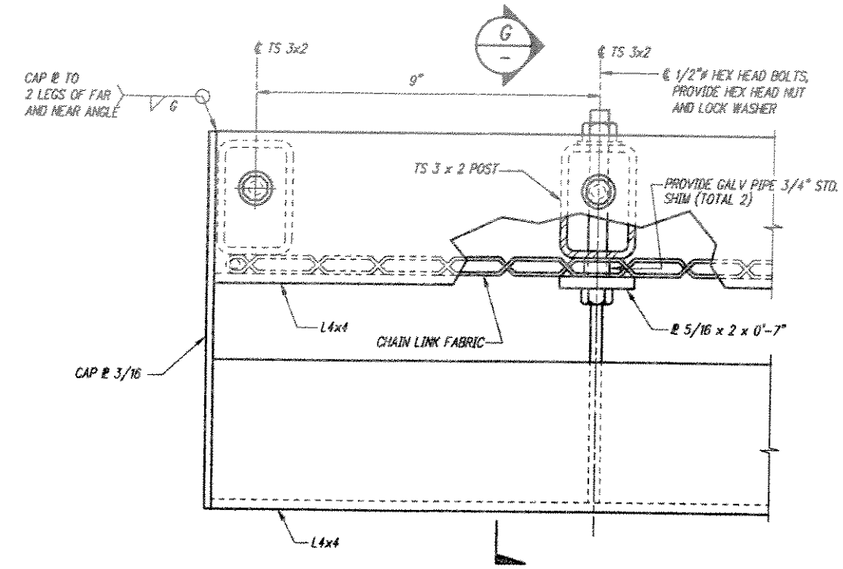

PLAN-SECTION (C / S43)

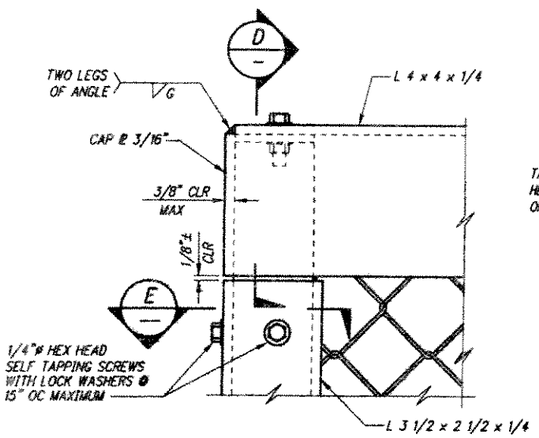

END POST – DETAIL (2 / S43)

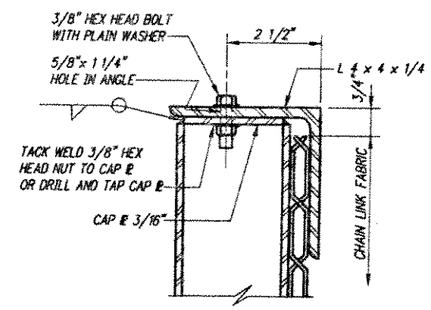

SECTION (D / –)

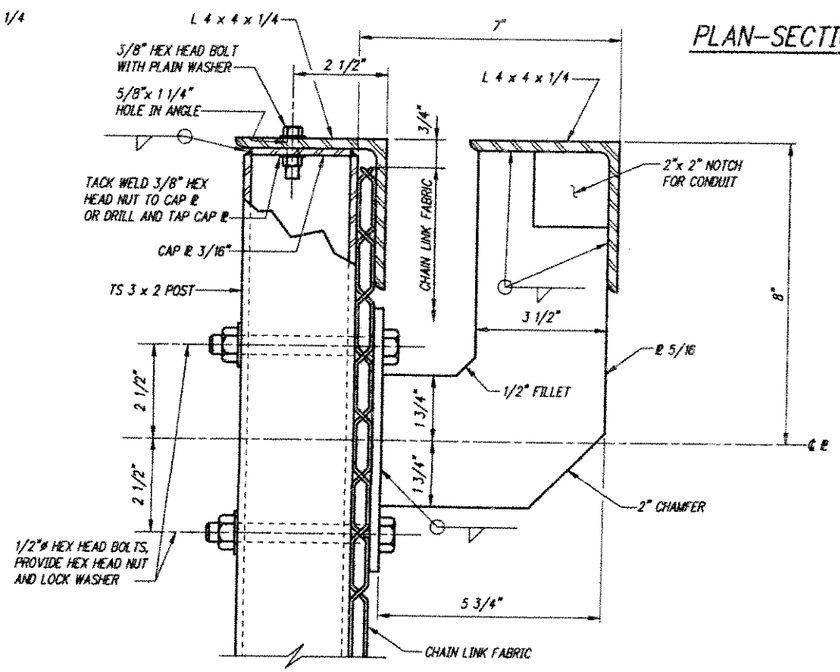

SECTION (G / –) S43, S44

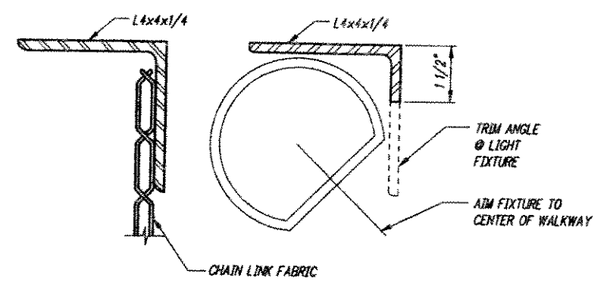

SECTION (H / S43)

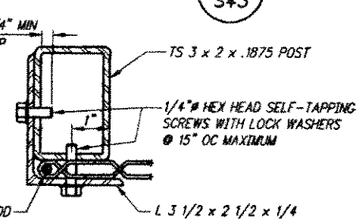

END POST – SECTION (E / –)

NOTE: HOLES (FOR SELF-TAPPING SCREWS) IN END POST SHALL BE DRILLED BEFORE CONDUITS ARE IN PLACE.

kpff Consulting Engineers
1201 Third Avenue, Suite 900
Seattle, Washington 98101
(206) 622-5822 Fax (206) 622-8130

CALL 48 HOURS BEFORE YOU DIG 1-800-424-5555

RICHARD K. JOHNSON, STATE OF WASHINGTON, 24842, REGISTERED PROFESSIONAL ENGINEER
EXPIRES 9/30/01

FILE	ENGR.	REVIEW	SCALE	DATE
	JEM	IH	SHOWN	

NO.	REVISION	BY	REVIEW	DATE

CITY OF KIRKLAND WASHINGTON

CITY OF KIRKLAND
PUBLIC WORKS DEPARTMENT
123 FIFTH AVENUE – KIRKLAND, WA 98033-6189 – (425) 828-1243

N.E. 100TH STREET BRIDGE

CHAIN LINK RAILING TYPE 7L
DETAILS II

SHEET
S44

LEMKUHL, JOHNSON, 10X13

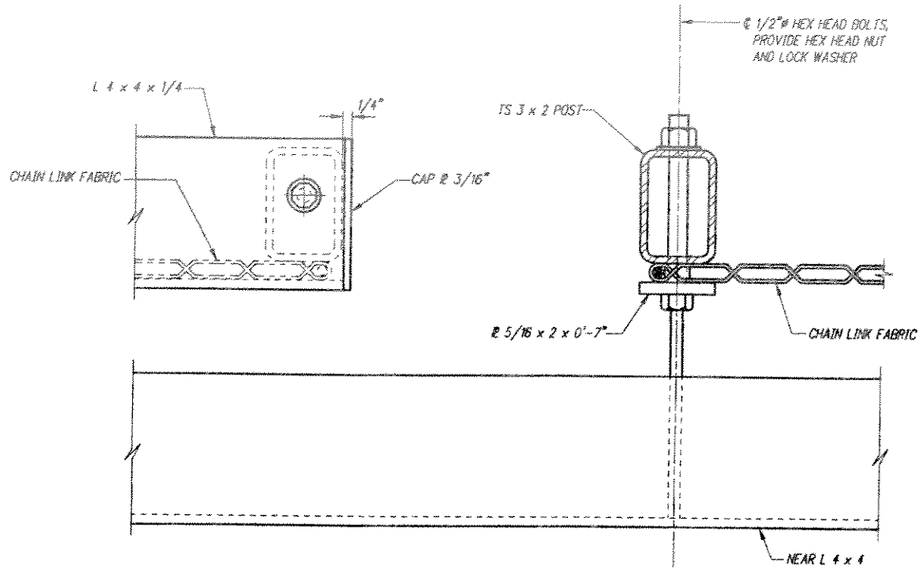

PLAN – SECTION C

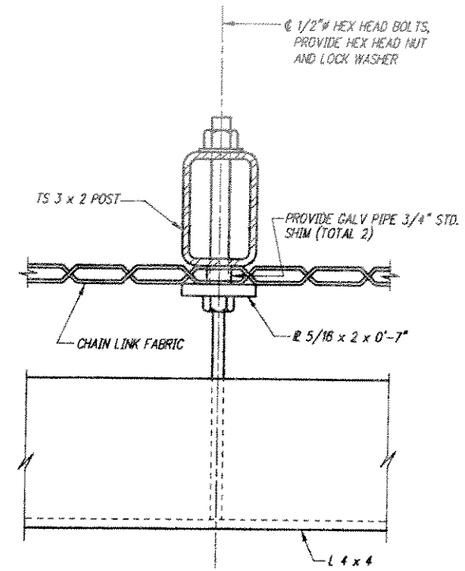

PLAN – SECTION D

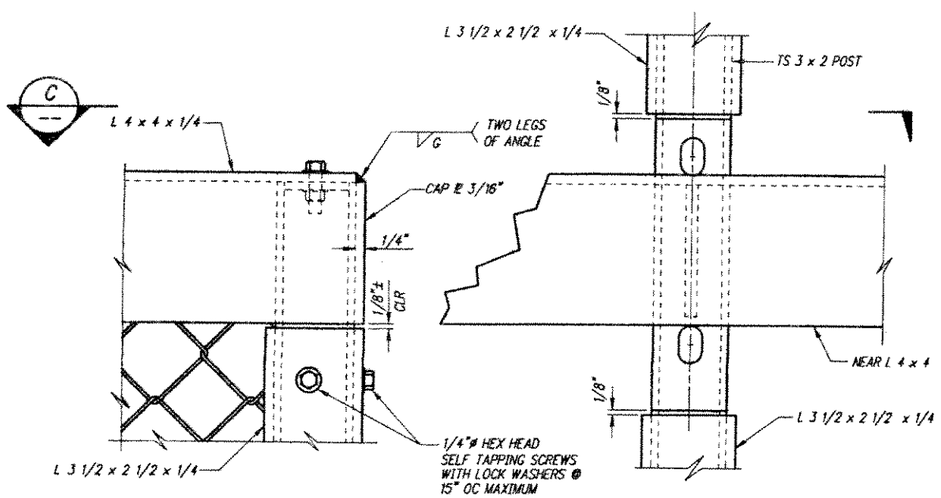

DETAIL 4 / S43

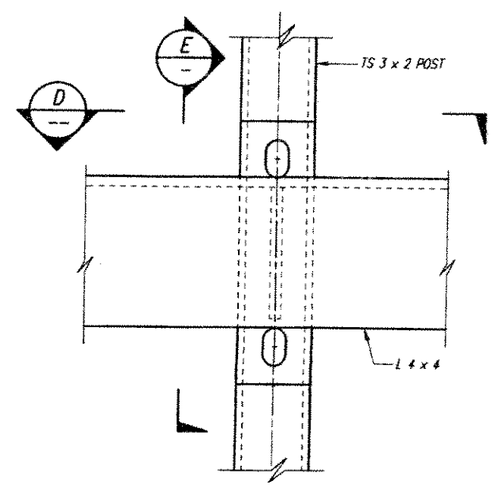

DETAIL 5 / S43

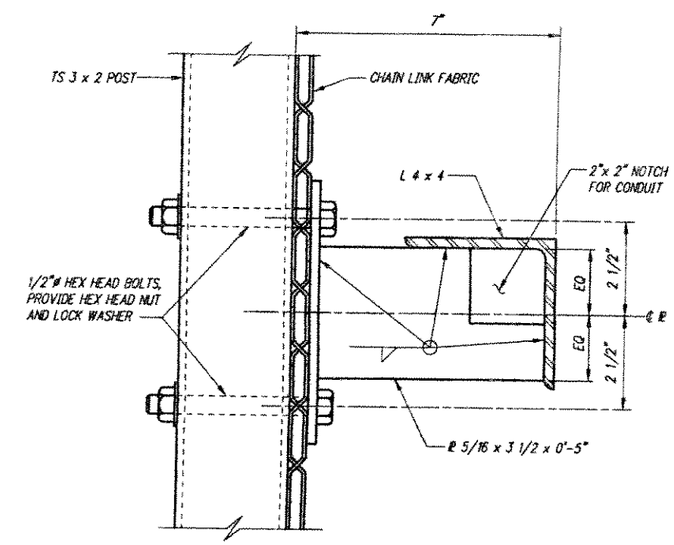

SECTION E

kpff Consulting Engineers
1201 Third Avenue, Suite 900
Seattle, Washington 98101
(206) 622-5822 Fax (206) 622-8130

CALL 48 HOURS BEFORE YOU DIG 1-800-424-5555

FILE	ENGR.	REVIEW	SCALE	DATE
	JEM	IH	SHOWN	

NO.	REVISION	BY	REVIEW	DATE

CITY OF KIRKLAND WASHINGTON

CITY OF KIRKLAND
PUBLIC WORKS DEPARTMENT
123 FIFTH AVENUE – KIRKLAND, WA 98033-6189 – (425) 828-1243

N.E. 100TH STREET BRIDGE

CHAIN LINK RAILING TYPE 7L
DETAILS III

SHEET
S45

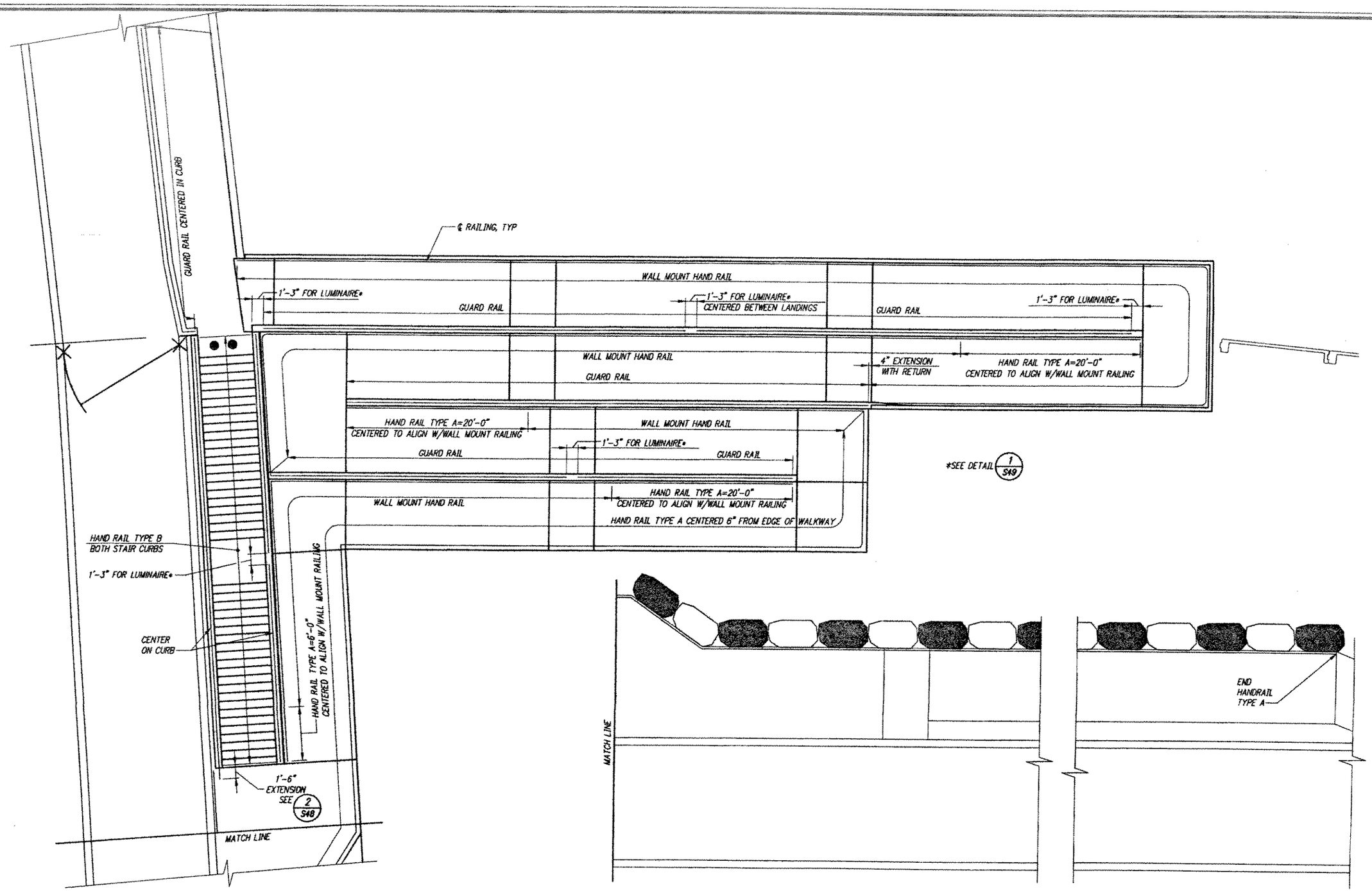

kpff Consulting Engineers

1201 Third Avenue, Suite 900
Seattle, Washington 98101
(206) 622-5822 Fax (206) 622-8130

CALL 48 HOURS
BEFORE YOU DIG
1-800-424-5555

RICHARD K. JOHNSON
STATE OF WASHINGTON
24877
REGISTERED
PROFESSIONAL ENGINEER
EXPIRES 9/10/

FILE	ENGR.	REVIEW	SCALE	DATE
	JEM	IH	SHOWN	

NO.	REVISION	BY	REVIEW	DATE

CITY OF KIRKLAND
WASHINGTON

CITY OF KIRKLAND
PUBLIC WORKS DEPARTMENT
123 FIFTH AVENUE – KIRKLAND, WA 98033-6189 – (425) 828-1243

N.E. 100TH STREET BRIDGE

ADA RAMP RAILING PLAN

SHEET
S46

PEDALTZ, JOHNSON, 100XTB.

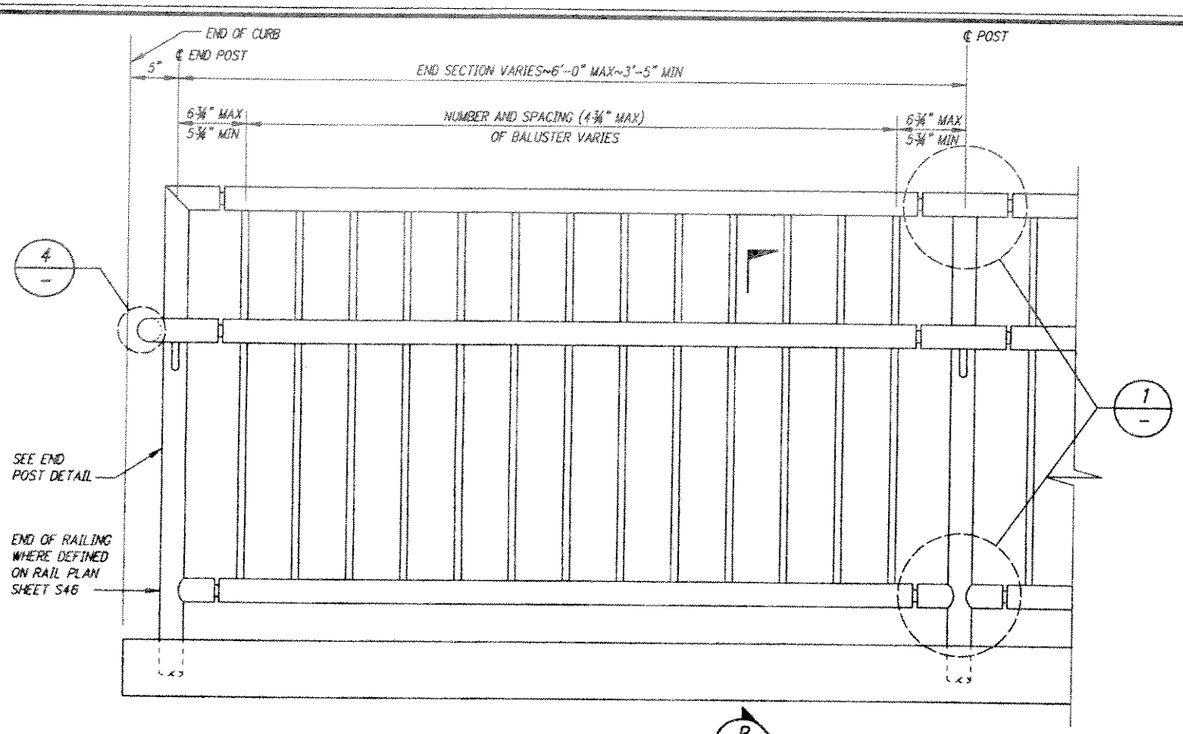

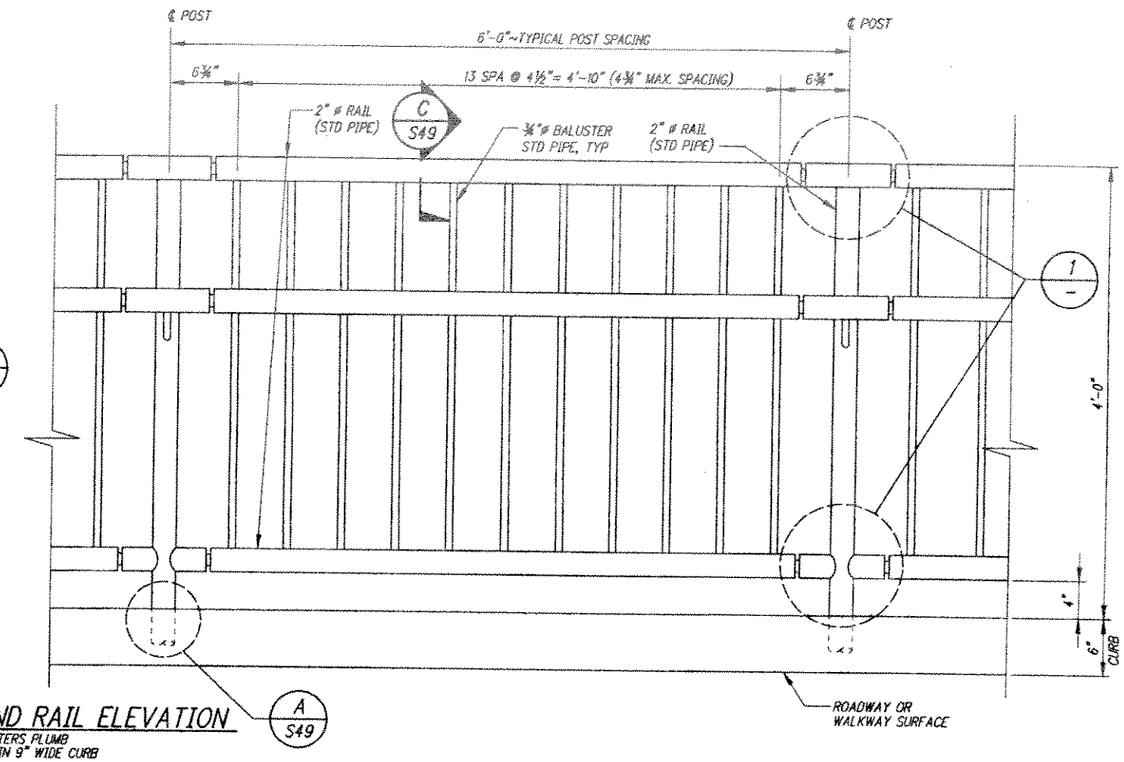

B

GUARD RAIL WITH HAND RAIL ELEVATION

POSTS AND BALUSTERS PLUMB
GUARD RAIL CENTERED IN 9" WIDE CURB

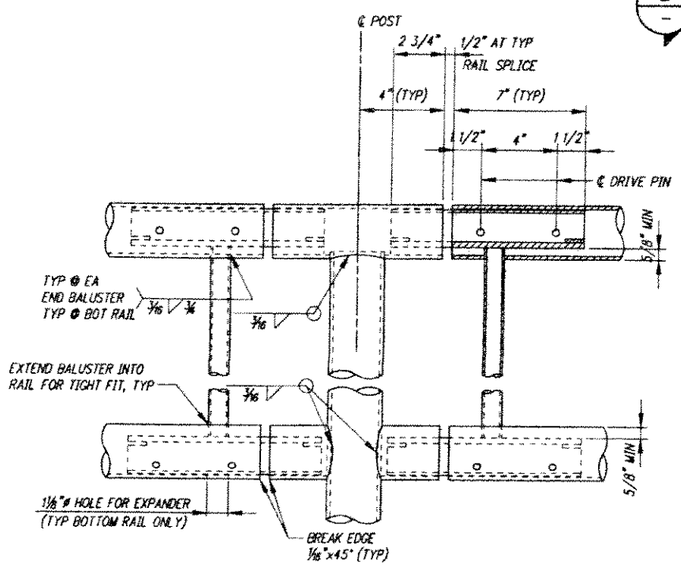

DETAIL 1

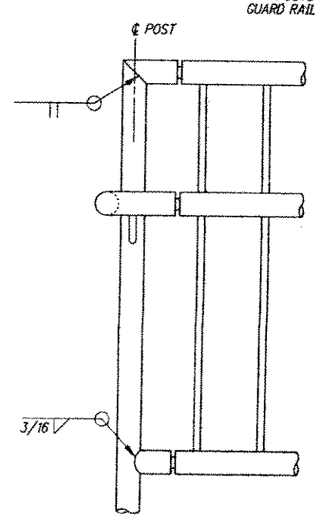

END POST
FOR RAIL DETAILS, SEE 1

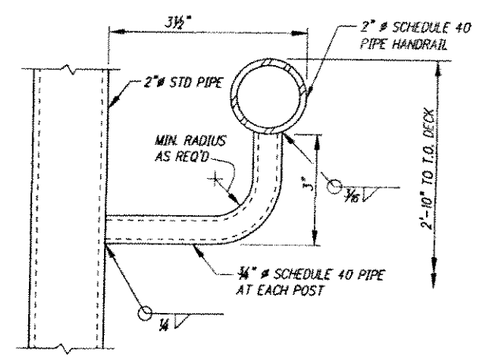

SECTION B

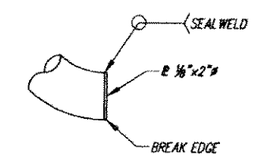

DETAIL 3

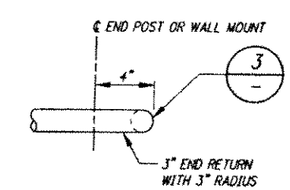

HANDRAIL END DETAIL 4

kpff Consulting Engineers
1201 Third Avenue, Suite 900
Seattle, Washington 98101
(206) 622-5822 Fax (206) 622-8130

CALL 48 HOURS
BEFORE YOU DIG
1-800-424-5555

RICHARD K. MORRISON
STATE OF WASHINGTON
24617
REGISTERED PROFESSIONAL ENGINEER
EXPIRES 9/16/07

FILE	ENGR.	REVIEW	SCALE	DATE
	JEM	IH	SHOWN	

NO.	REVISION	BY	REVIEW	DATE

CITY OF KIRKLAND
PUBLIC WORKS DEPARTMENT
123 FIFTH AVENUE – KIRKLAND, WA 98033-6189 – (425) 828-1243

N.E. 100TH STREET BRIDGE

ADA RAMP RAILING DETAILS I

SHEET
S47

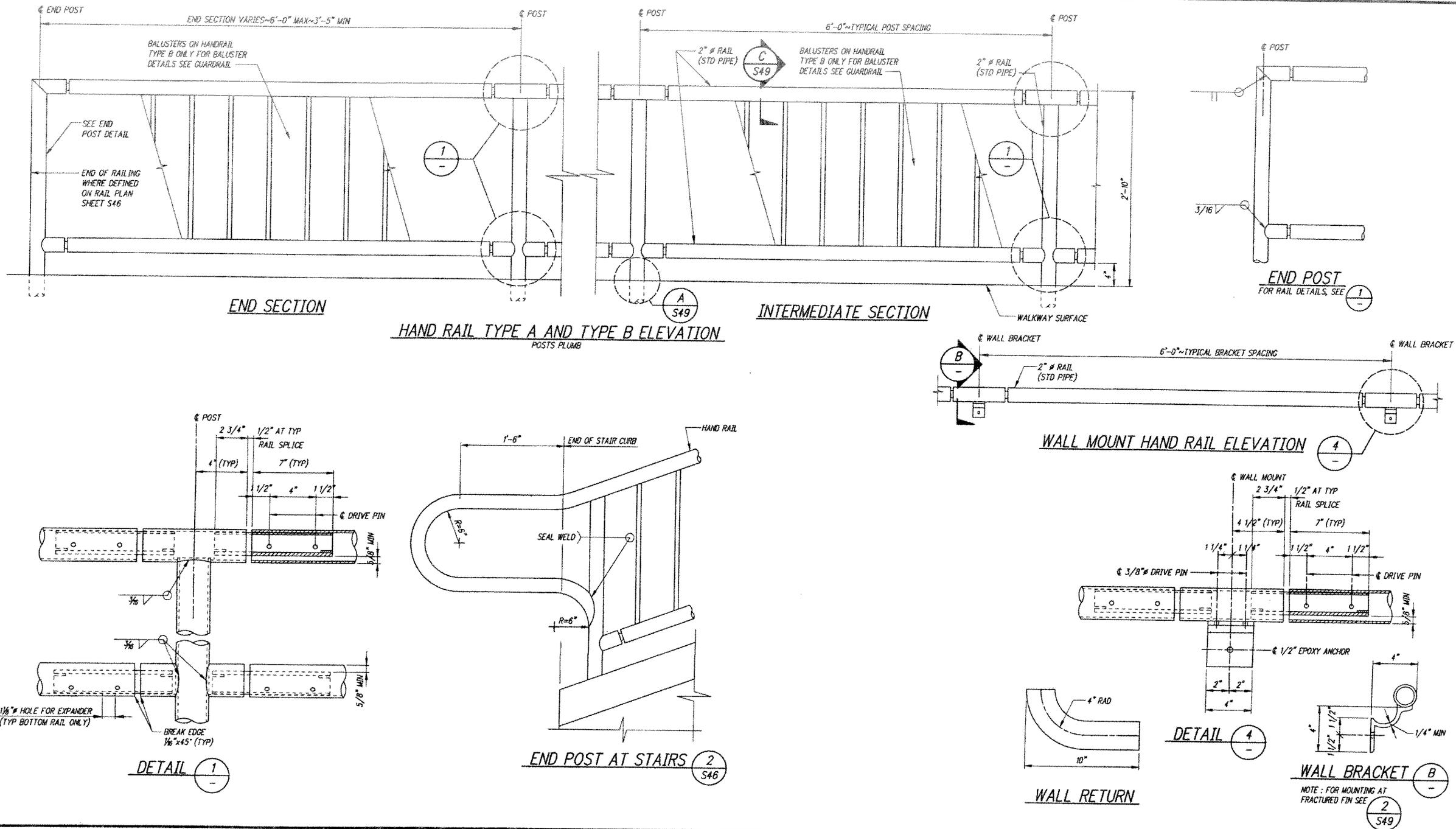

kpff Consulting Engineers
1201 Third Avenue, Suite 900
Seattle, Washington 98101
(206) 622-5822 Fax (206) 622-8130

CALL 48 HOURS BEFORE YOU DIG 1-800-424-5555

FILE	ENGR.	REVIEW	SCALE	DATE
	JEM	IH	SHOWN	

NO.	REVISION	BY	REVIEW	DATE

CITY OF KIRKLAND WASHINGTON

CITY OF KIRKLAND
PUBLIC WORKS DEPARTMENT
123 FIFTH AVENUE – KIRKLAND, WA 98033-6189 – (425) 828-1243

N.E. 100TH STREET BRIDGE

ADA RAMP RAILING DETAILS II

SHEET S48

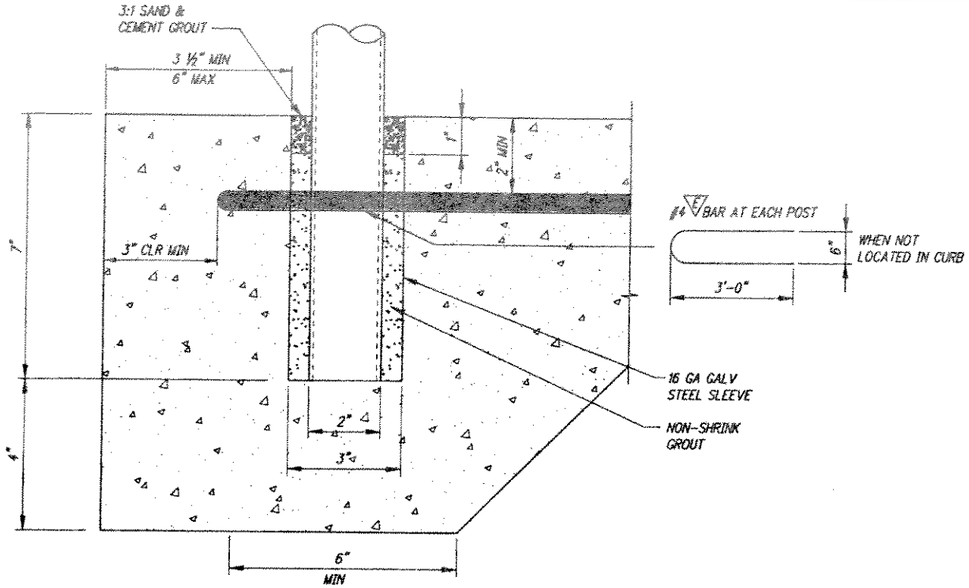

BASE DETAIL A / S47, S48

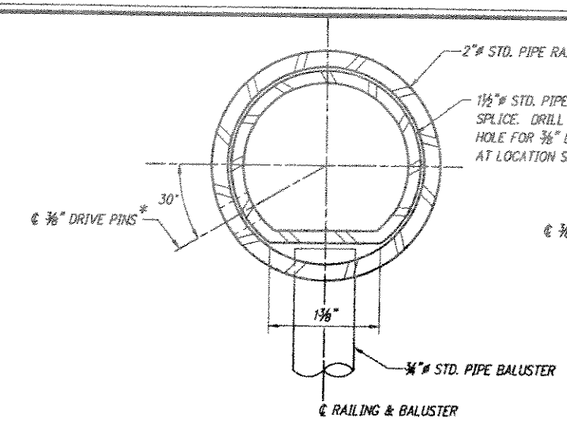

DETAIL C / S47, S48
OPTION #1

* LOCATE ON OPPOSITE SIDE OF TRAFFIC. DRIVE PINS SHALL BE DRIVEN FLUSH WITH THE OUTSIDE FACE OF THE RAILING.

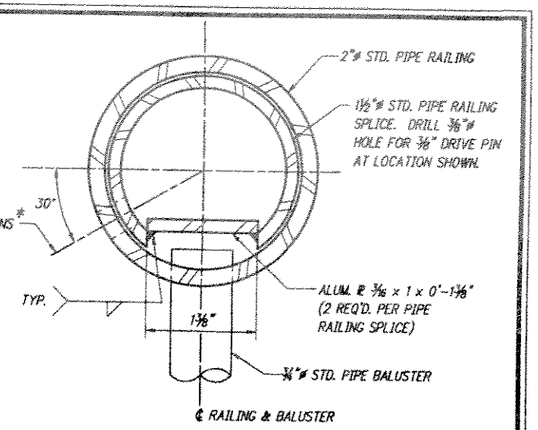

DETAIL C / S47, S48
OPTION #2

* LOCATE ON OPPOSITE SIDE OF TRAFFIC. DRIVE PINS SHALL BE DRIVEN FLUSH WITH THE OUTSIDE FACE OF THE RAILING.

MAT'L	PART	MATERIAL SPECIFICATION
STEEL	PIPES	ASTM A-53 GRADE B STEEL
	PLATES	AASHTO 183
	BOLTS, NUTS & WASHERS	AASHTO M164 (GALVANIZE IN ACCORDANCE WITH AASHTO SPECIFICATION M232)
	MESH	SEE NOTES

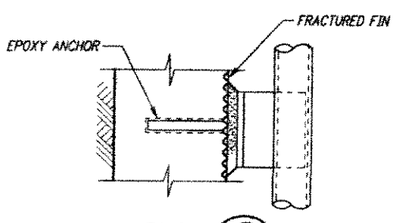

PLAN B / –

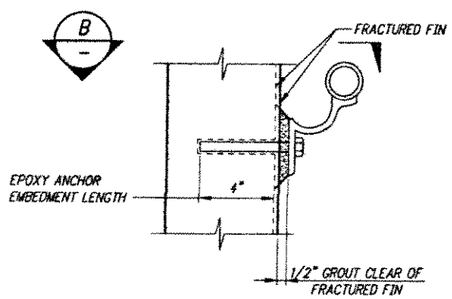

WALL MOUNT HAND RAIL AT FRACTURED FIN 2 / S48

BRIDGE RAILING TYPE CHAIN LINK FENCE NOTES

ALL ELEMENTS OF BRIDGE RAILING SHALL BE HOT DIPPED GALVANIZED AFTER FABRICATION.

STEEL PIPES FOR POSTS AND POSTS AND LONGITUDINAL MEMBERS SHALL BE ASTM SPECIFICATION A53 GRADE B STEEL & GALVANIZED PER AASHTO M111.

ALL HARDWARE SHALL CONFORM TO AASHTO SPECIFICATIONS M183 GALVANIZED PER AASHTO M111 & M232 UNLESS NOTED OTHERWISE.

FABRIC SHALL BE GALVANIZED STEEL #9 GAGE WIRE CONFORMING TO ASTM A392. WOVEN IN 2" CHAIN LINK DIAMOND MESH.

FABRIC TIES SHALL BE INSTALLED TO ALL FRAMES IN ACCORDANCE WITH MANUFACTURES RECOMMENDATIONS AT 1'-2" CENTERS MAX. SPA.

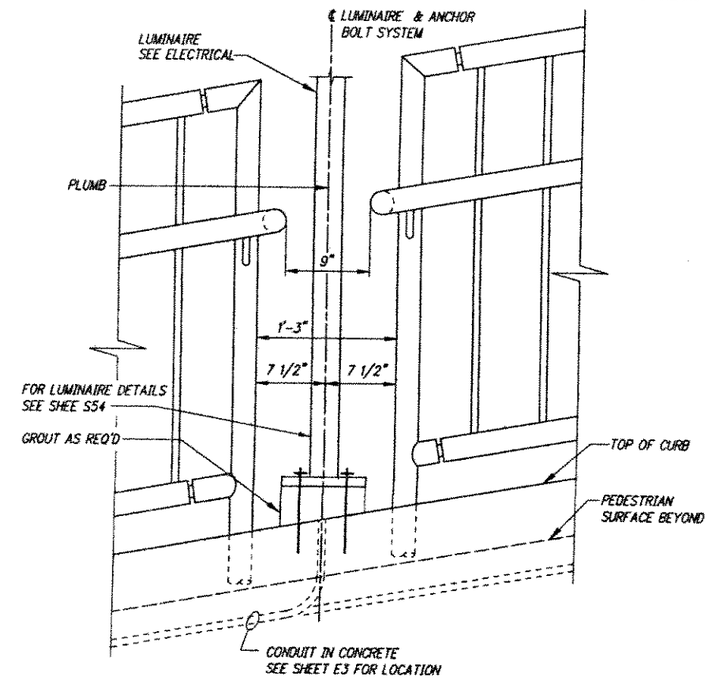

LUMINAIRE DETAIL 1 / S46

kpff Consulting Engineers
1201 Third Avenue, Suite 900
Seattle, Washington 98101
(206) 622-5822 Fax (206) 622-8130

CALL 48 HOURS BEFORE YOU DIG 1-800-424-5555

FILE	ENGR.	REVIEW	SCALE	DATE
	JEM	IH	SHOWN	

NO.	REVISION	BY	REVIEW	DATE

CITY OF KIRKLAND WASHINGTON

CITY OF KIRKLAND
PUBLIC WORKS DEPARTMENT
123 FIFTH AVENUE – KIRKLAND, WA 98033-6189 – (425) 828-1243

N.E. 100TH STREET BRIDGE
ADA RAMP RAILING DETAILS III

SHEET S49

S: LEIMKUHL, JOHNSON, 100XTB.

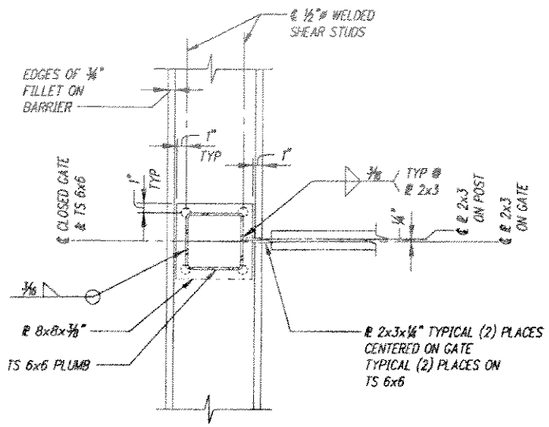

SECTION C

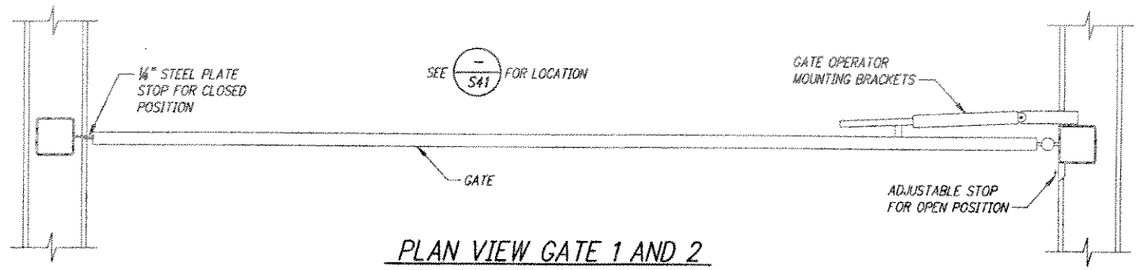

PLAN VIEW GATE 1 AND 2

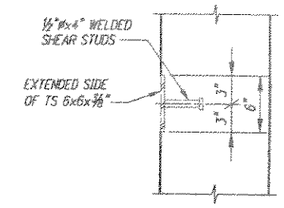

SECTION B

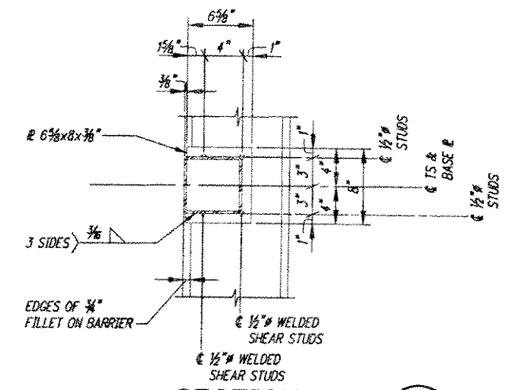

SECTION A

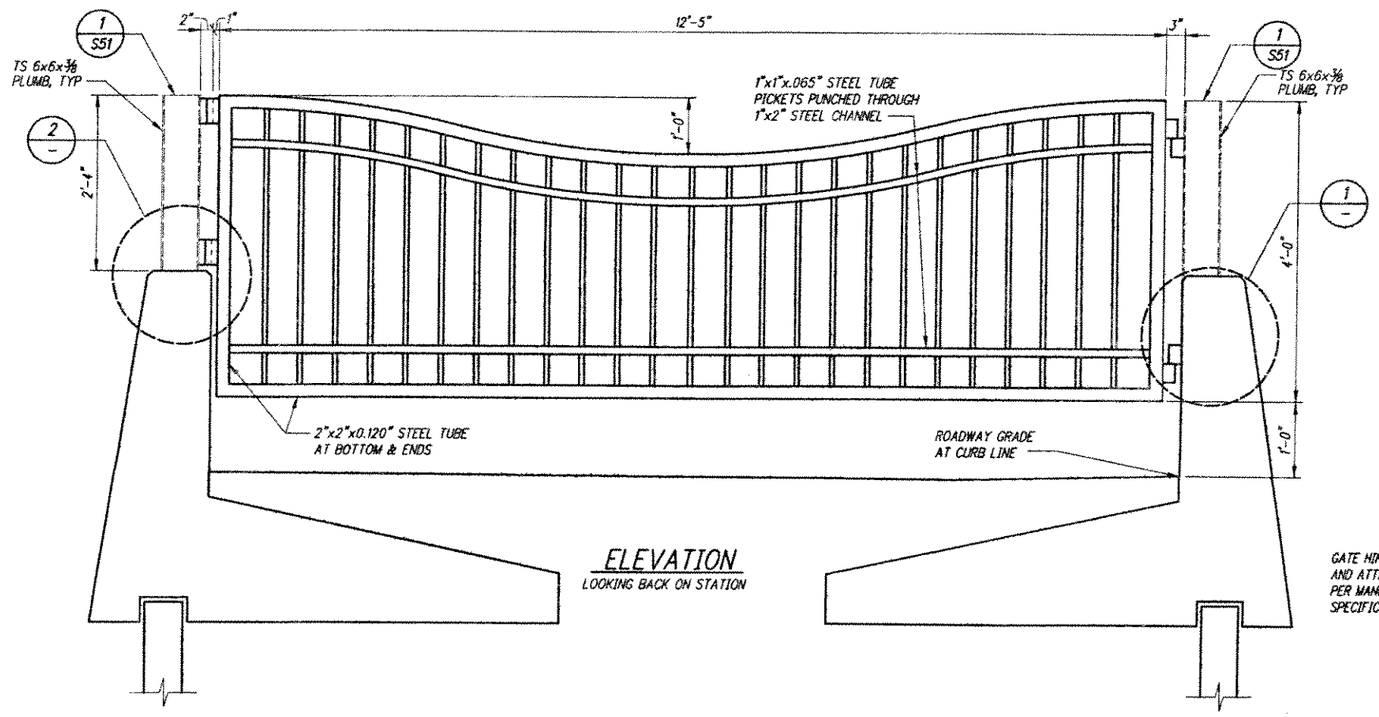

ELEVATION
LOOKING BACK ON STATION

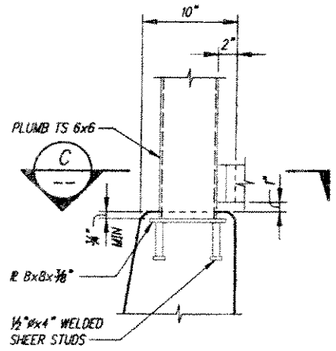

DETAIL 2 S51

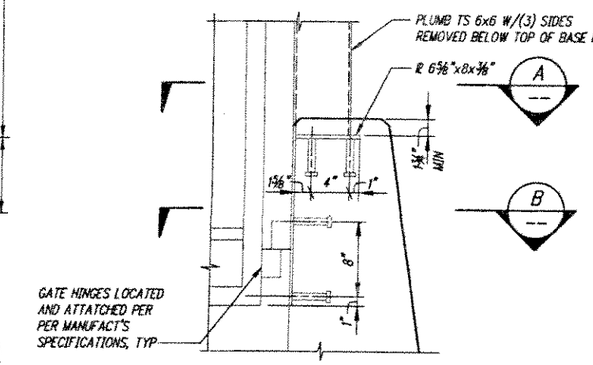

DETAIL 1

kpff Consulting Engineers
1201 Third Avenue, Suite 900
Seattle, Washington 98101
(206) 622-5822 Fax (206) 622-8130

CALL 48 HOURS BEFORE YOU DIG 1-800-424-5555

RICHARD K. JOHNSON — STATE OF WASHINGTON — 24874 — REGISTERED PROFESSIONAL ENGINEER — EXPIRES 9/10/07

FILE	ENGR.	REVIEW	SCALE	DATE
	JEM	IH	SHOWN	

NO.	REVISION	BY	REVIEW	DATE

CITY OF KIRKLAND WASHINGTON

CITY OF KIRKLAND
PUBLIC WORKS DEPARTMENT
123 FIFTH AVENUE – KIRKLAND, WA 98033-6189 – (425) 828-1243

N.E. 100TH STREET BRIDGE
EAST APPROACH
BRIDGE GATE DETAILS

SHEET
S50

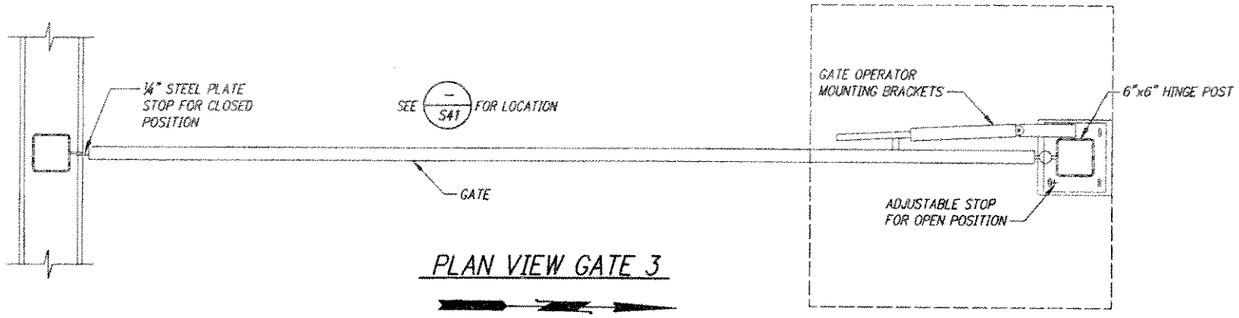

PLAN VIEW GATE 3

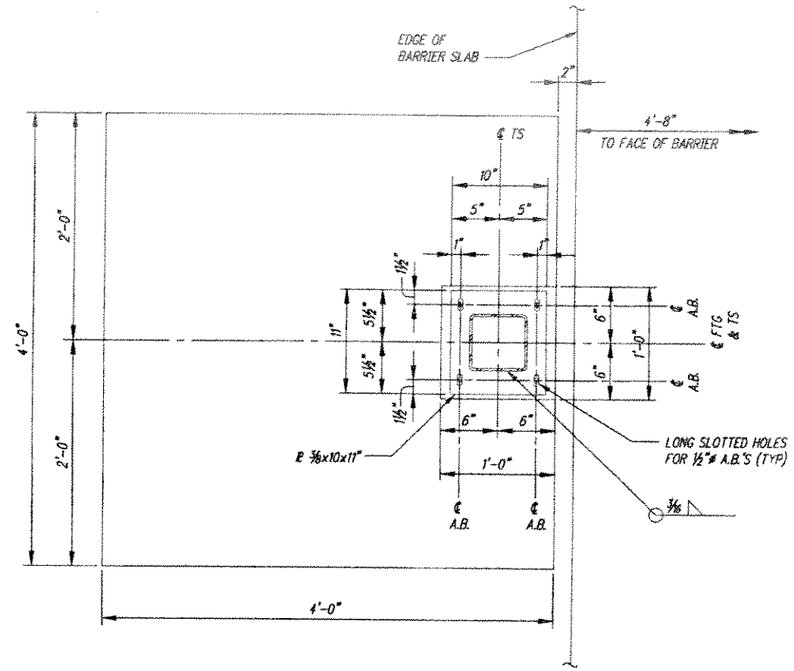

SECTION A
1½"=1'-0"

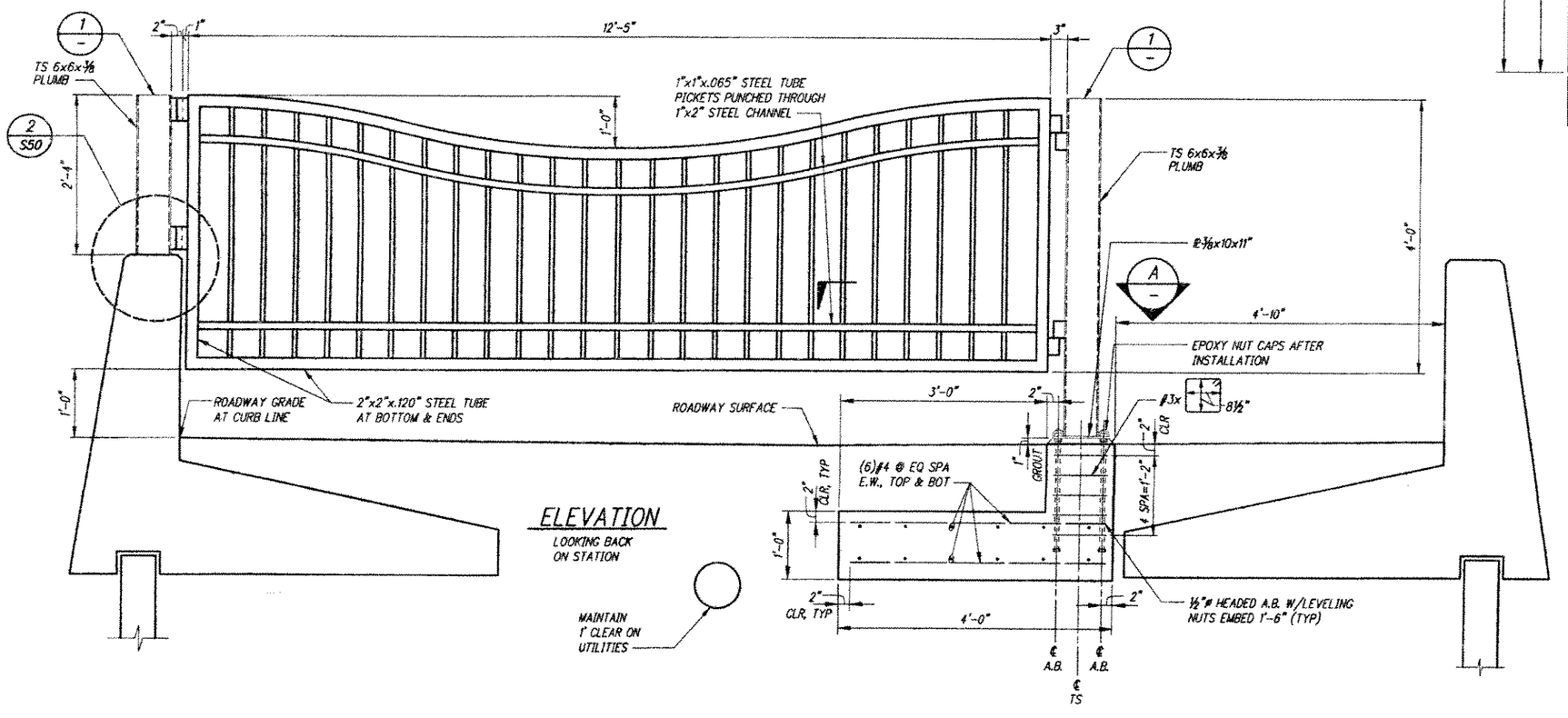

ELEVATION
LOOKING BACK ON STATION

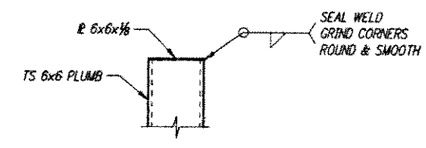

DETAIL 1 S50
1½"=1'-0"

kpff Consulting Engineers
1201 Third Avenue, Suite 900
Seattle, Washington 98101
(206) 622-5822 Fax (206) 622-8130

CALL 48 HOURS BEFORE YOU DIG 1-800-424-5555

FILE	ENGR.	REVIEW	SCALE	DATE
	JEM	IH	SHOWN	

NO.	REVISION	BY	REVIEW	DATE

CITY OF KIRKLAND WASHINGTON

CITY OF KIRKLAND
PUBLIC WORKS DEPARTMENT
123 FIFTH AVENUE - KIRKLAND, WA 98033-6189 - (425) 828-1243

N.E. 100TH STREET BRIDGE
WEST APPROACH
BRIDGE GATE DETAILS

SHEET
S51

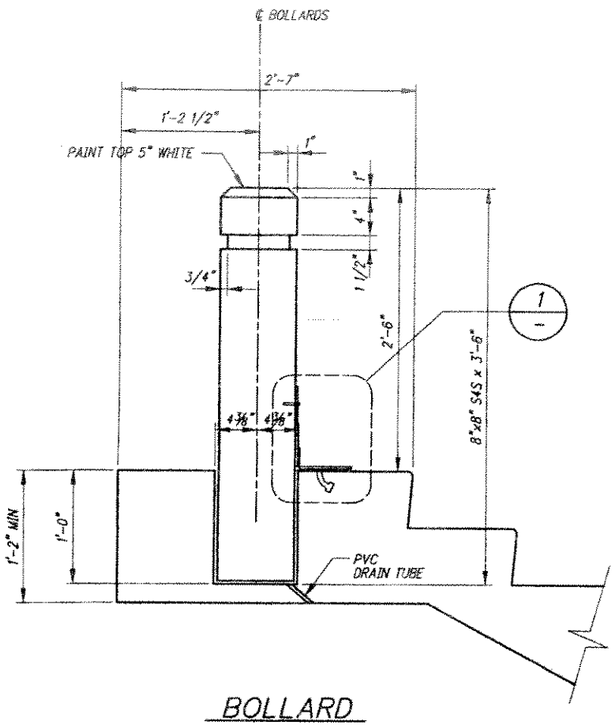

BOLLARD

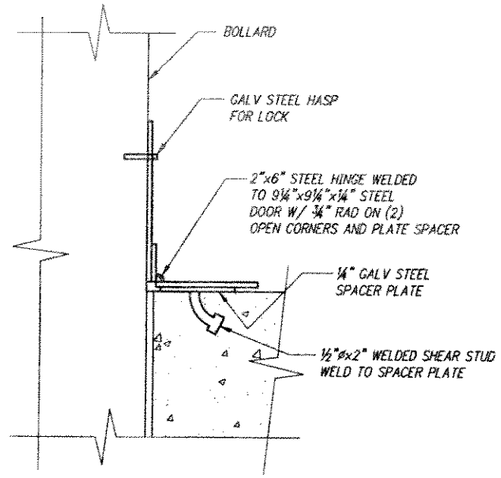

DETAIL 1

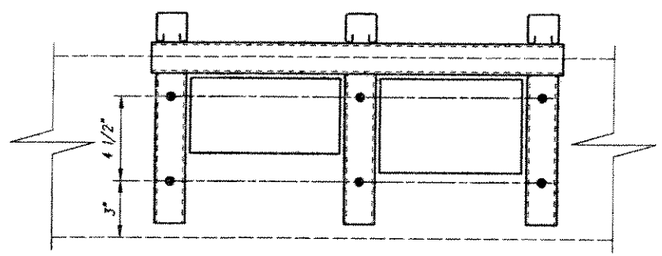

PLAN

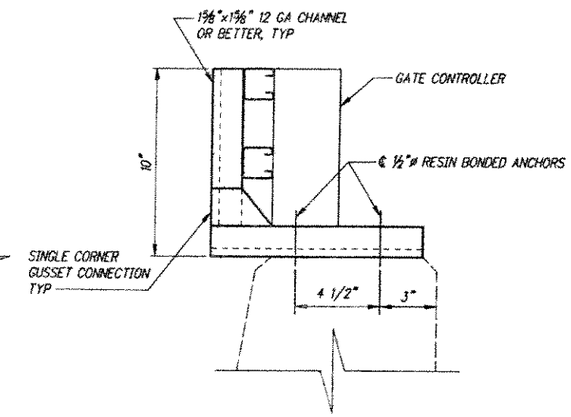

ELEVATION

GATE CONTROLLER ATTACHMENT BRACKET

NOTES:

1. TIMBER SHALL BE DOUGLAS FIR, DENSE CONSTRUCTION GRADE, AND SHALL BE PRESSURE TREATED.
2. NUTS, BOLTS, AND WASHERS SHALL CONFORM TO ASTM A307.
3. ALL STEEL PARTS SHALL BE GALVANIZED.
4. A HASP MAY BE SUBSTITUTED FOR THE CHAIN UPON APPROVAL BY THE CITY INSPECTOR.
5. PITCH GRADE ON FIXED BOLLARD TO DRAIN AWAY FROM POST TYPICAL.

kpff Consulting Engineers
1201 Third Avenue, Suite 900
Seattle, Washington 98101
(206) 622-5822 Fax (206) 622-8130

CALL 48 HOURS BEFORE YOU DIG 1-800-424-5555

RICHARD K. JOHNSON, STATE OF WASHINGTON, 24007, REGISTERED PROFESSIONAL ENGINEER, EXPIRES 9/10/02

FILE	ENGR.	REVIEW	SCALE	DATE
	JEM	IH	SHOWN	

NO.	REVISION	BY	REVIEW	DATE

CITY OF KIRKLAND WASHINGTON

CITY OF KIRKLAND
PUBLIC WORKS DEPARTMENT
123 FIFTH AVENUE – KIRKLAND, WA 98033-6189 – (425) 828-1243

N.E. 100TH STREET BRIDGE
BOLLARD DETAILS AND
GATE CONTROLLER
ATTACHMENT DETAILS

SHEET
S52

S:\LEIMKUHL, JOHNSON, 100X18,

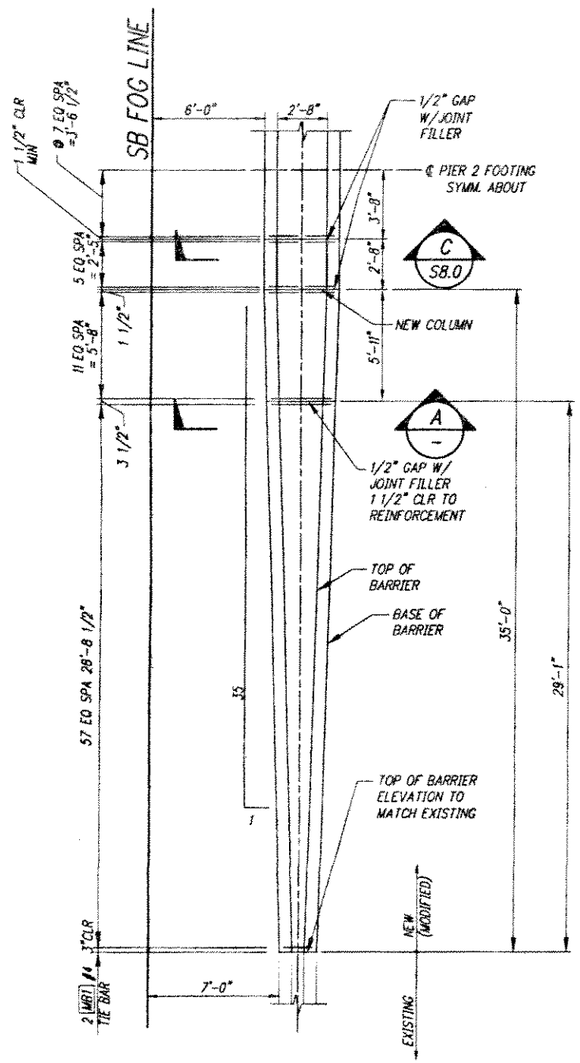

PLAN OF MEDIAN BARRIER

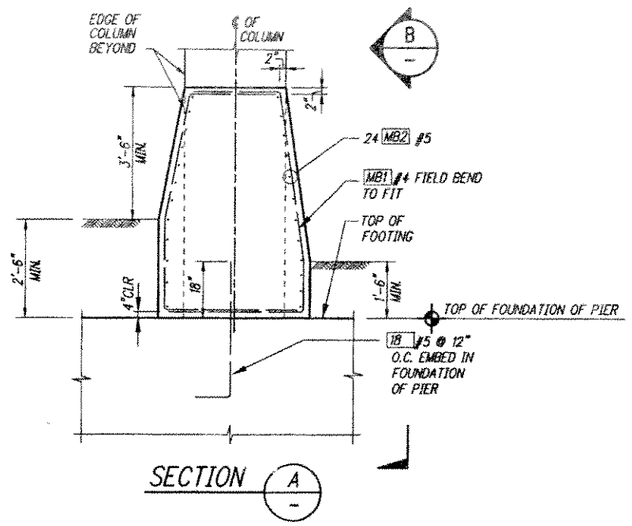

SECTION A

BENDING DIAGRAM			
MARK	LOCATION	SIZE	a
MB1	TIE BAR	4	
MB2	LONGITUDINAL	5	28'-8"
MB3	LONGITUDINAL	5	5'-8"
MB4	LONGITUDINAL IN COL	5	2'-5"
MB5	LONGITUDINAL BETWEEN COL.'S	5	7'-1"
MB6	DOWEL BARS (SMOOTH)	1"ø	2'-0"

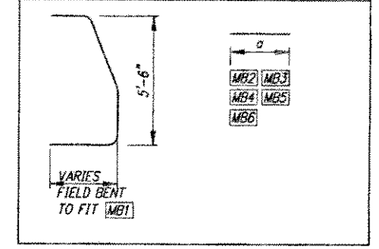

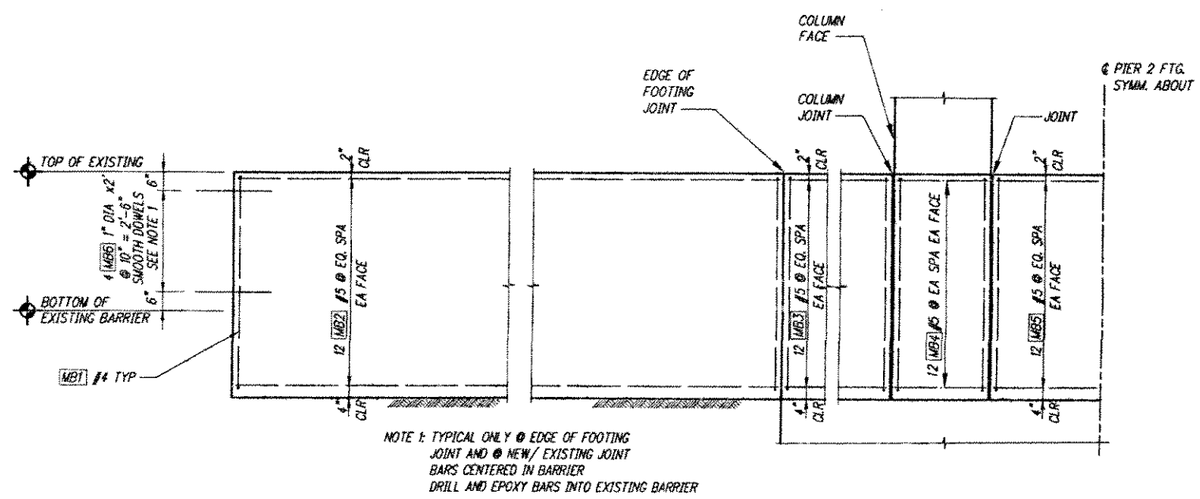

NOTE 1: TYPICAL ONLY @ EDGE OF FOOTING JOINT AND @ NEW/ EXISTING JOINT BARS CENTERED IN BARRIER DRILL AND EPOXY BARS INTO EXISTING BARRIER

ELEVATION OF MEDIAN BARRIER B S8.0

kpff Consulting Engineers
1201 Third Avenue, Suite 900
Seattle, Washington 98101
(206) 622-5822 Fax (206) 622-8130

CALL 48 HOURS BEFORE YOU DIG 1-800-424-5555

FILE	ENGR.	REVIEW	SCALE	DATE
	JEM	IH	SHOWN	

NO.	REVISION	BY	REVIEW	DATE

CITY OF KIRKLAND WASHINGTON

CITY OF KIRKLAND
PUBLIC WORKS DEPARTMENT
123 FIFTH AVENUE – KIRKLAND, WA 98033-6189 – (425) 828-1243

N.E. 100TH STREET BRIDGE
MEDIAN BARRIER
RECONSTRUCTION DETAIL

SHEET
S53

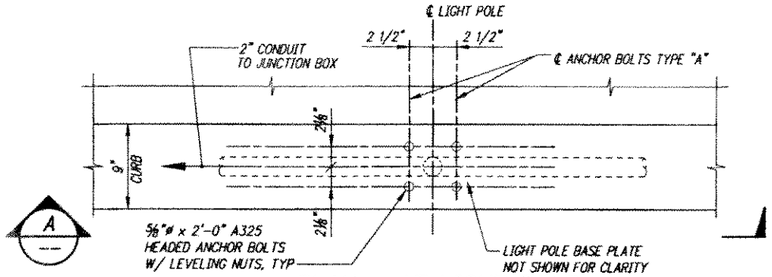

PLAN – AT LIGHT POLE

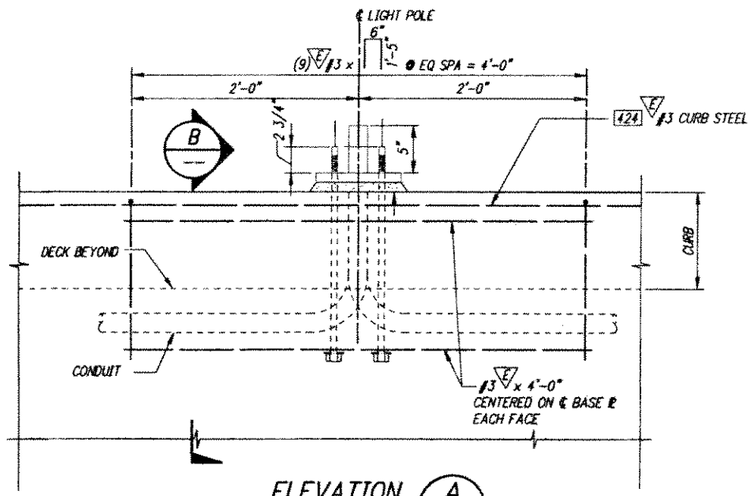

ELEVATION A

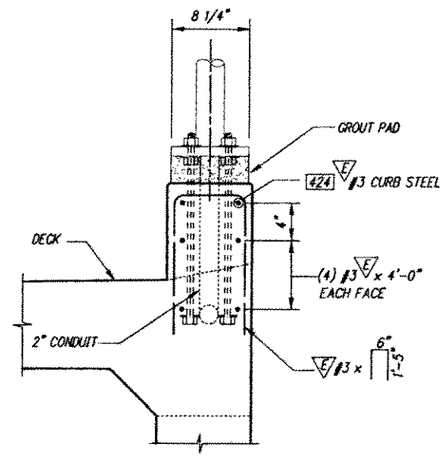

SECTION B

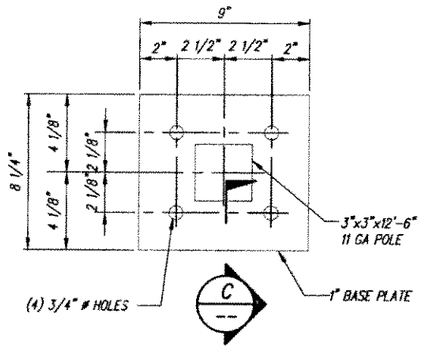

SPECIAL BASE PLATE

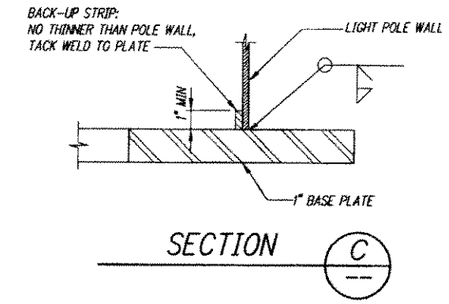

SECTION C

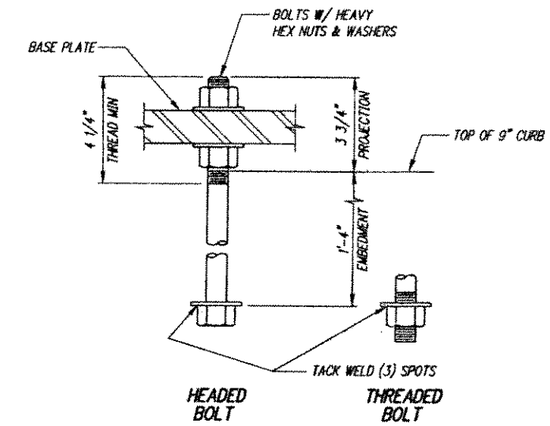

ANCHOR BOLT DETAIL

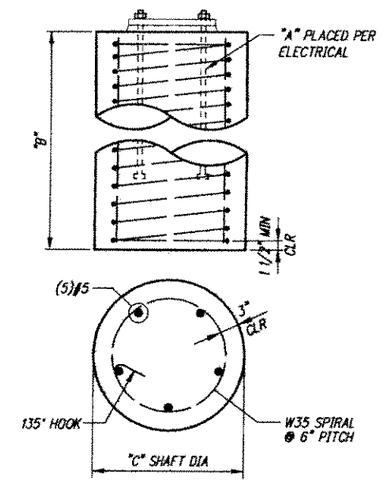

	"A"	"B"	"C"
POLE BASE	(4) 5/8"ø A325 HEADED ANCHOR BOLTS WITH WASHER AND LEVELING NUTS EMBED MIN 1'-4"	3'-6"	2'-0"

LIGHT POLE FOUNDATION DETAILS

NOTE: APPLICABLE ONLY TO LUMINAIRE TYPE S3. FOR LUMINAIRES TYPE S1 SEE CITY OF KIRKLAND PRE-APPROVED PLANS R47, R47A, AND R47C

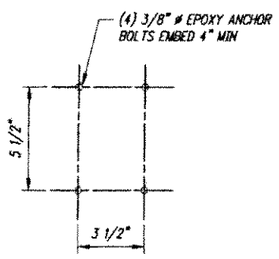

SECTION D

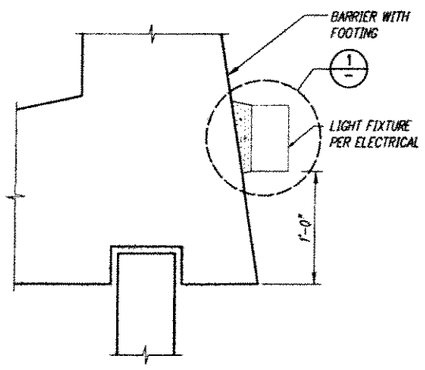

ELEVATION E

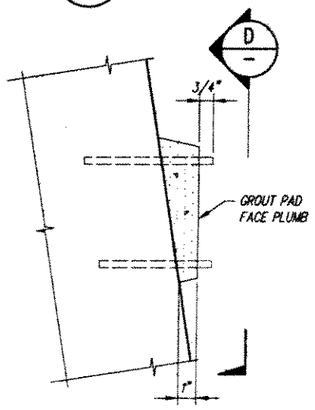

DETAIL 1

kpff Consulting Engineers
1201 Third Avenue, Suite 900
Seattle, Washington 98101
(206) 622-5822 Fax (206) 622-8130

CALL 48 HOURS BEFORE YOU DIG 1-800-424-5555

FILE	ENGR.	REVIEW	SCALE	DATE
	JEM	IH	SHOWN	

NO.	REVISION	BY	REVIEW	DATE

CITY OF KIRKLAND WASHINGTON

CITY OF KIRKLAND
PUBLIC WORKS DEPARTMENT
123 FIFTH AVENUE – KIRKLAND, WA 98033-6189 – (425) 828-1243

N.E. 100TH STREET BRIDGE

LUMINAIRE DETAILS

SHEET S54

S = Bar is included in substructure quantities.
F = Bar to be field welded.
T = Tie or Stirrup.
E = Bar is to be epoxy coated.
V = Bar dimensions vary between dimensions shown on this line and the following line.

MARK NO.	LOCATION	SIZE	NUMBER REQ'D	BEND TYPE	TIE OR STIR.	FLD. WELD	SUBSTR.	EPOXY COAT	VARIES	NO. EACH	U Ft.	U In.	W Ft.	W In.	X Ft.	X In.	Y Ft.	Y In.	Z Ft.	Z In.	θ1 Deg.	θ2 Deg.	LENGTH Ft.	LENGTH In.	WEIGHT Lbs.
	FOOTINGS																								
	PIER 1 FOOTING																								
1	BOTTOM LONGITUDINAL	11	43	50			S				15	6											15	6	3542
2	BOTTOM TRANSVERSE	9	28	50			S				24	6											24	6	2333
3	TOP TRANSVERSE	7	22	50			S				24	6											24	6	1102
4	TOP LONGITUDINAL	9	34	50			S				15	6											15	6	1792
	PIER 2 FOOTING																								
11	BOTTOM TRANSVERSE	9	21	50			S				24	6											24	6	1750
12	BOTTOM LONGITUDINAL	9	28	50			S				13	6											13	6	1286
13	TOP LONGITUDINAL	7	29	50			S				13	6											13	6	801
14	TOP SHORT LONGITUDINAL	7	12	50			S				6	4											6	4	156
15	TOP TRANSVERSE	7	16	50			S				24	6											24	6	802
16	TOP SHORT TRANSVERSE	7	6	50			S				6	6											6	6	80
17	TOP SHORT TRANSVERSE	7	3	50			S				9												9		56
18	DOWELS TO BARRIER	5	20	54			S				3												3	10	80
	PIER 3 FOOTING																								
1	BOTTOM LONGITUDINAL	11	43	50			S				15	6											15	6	3542
2	BOTTOM TRANSVERSE	9	28	50			S				24	6											24	6	2333
3	TOP TRANSVERSE	7	22	50			S				24	6											24	6	1102
4	TOP LONGITUDINAL	9	34	50			S				15	6											15	6	1792
	ABUTMENTS																								
	PIER 1 ABUTMENT WALL																								
30	VERT NEAR FACE	4	38	50			S				21	6											21	6	546
31	VERT FAR FACE	10	38	50			S				21	6											21	6	3516
32	HORIZ. EA. FACE	5	60	80			S				19	10	1	3	1	3					103	77	22	4	1398
33	HORIZ. TOP LAYER	6	3	80			S				19	10	1	6	1	6					103	77	22	10	103
34	TIES	4	540	80	T		S				1	5		2.5		2.5					90	180	1	10	662
35	TOP TIES	4	28	72	T		S				1	6	1	2	1	2							4	7	86
	PIER 3 ABUTMENT WALL																								
30	VERT NEAR FACE	4	41	50			S				20												20		548
31	VERT FAR FACE	10	41	50			S				20												20		3529
32	HORIZ. EA. FACE	5	54	80			S				21	6	1	3	1	3					103	77	24		1352
33	HORIZ. TOP LAYER	6	3	80			S				21	6	1	6	1	6					103	77	24	6	111
34	TIES	4	540	80	T		S				1	5		2.5		2.5					90	180	1	10	662
35	TOP TIES	4	30	72	T		S				1	6	1	2	1	2							4	7	92
	PIER 1 CURTAIN WALL																								
60	VERT NEAR FACE	5	48	50			S				25	10											25	10	1294
61	VERT FAR FACE	9	48	50			S				25	10											25	10	4216
62	SOUTH WALL HORIZ FAR FACE	7	35	80			S				9	9	2	8							77		12	5	889
	NORTH WALL HORIZ FAR FACE	7	35	80			S				9	9	2	8							103		12	5	889
63	SOUTH WALL HORIZ NEAR FACE	5	35	80			S				9	9	1	9							77		11	6	420
	NORTH WALL HORIZ NEAR FACE	5	35	80			S				9	9	1	9							103		11	6	420
64	SOUTH WALL HORIZ FILLET	8	37	80			S				6	10	3	6	3	6					122	45	13	10	1367

S = Bar is included in substructure quantities.
F = Bar to be field welded.
T = Tie or Stirrup.
E = Bar is to be epoxy coated.
V = Bar dimensions vary between dimensions shown on this line and the following line.

MARK NO.	LOCATION	SIZE	NUMBER REQ'D	BEND TYPE	TIE OR STIR.	FLD. WELD	SUBSTR.	EPOXY COAT	VARIES	NO. EACH	U Ft.	U In.	W Ft.	W In.	X Ft.	X In.	Y Ft.	Y In.	Z Ft.	Z In.	θ1 Deg.	θ2 Deg.	LENGTH Ft.	LENGTH In.	WEIGHT Lbs.
	NORTH WALL HORIZ FILLET	8	37	80			S				6	10	2	8	2	8					148	45	12	2	1202
65	SOUTH WALL HORIZ TOP	8	2	80			S				9	9	3	8									13	5	72
	NORTH WALL HORIZ TOP	8	2	80			S				9	9	2	8									12	5	67
CB3	DOWELS TO BARRIER	5	20	50			S	E			4	4											4	4	91
CB4	DOWELS TO BARRIER	4	5	50			S				2	10											2	10	10
	PIER 3 CURTAIN WALL																								
60	VERT NEAR FACE	5	48	50			S				25	10											25	10	1294
61	VERT FAR FACE	9	48	50			S				25	10											25	10	4216
62	SOUTH WALL HORIZ FAR FACE	7	35	80			S				9	9	2	8							77		12	5	889
	NORTH WALL HORIZ FAR FACE	7	35	80			S				9	9	2	8							103		12	5	889
63	SOUTH WALL HORIZ NEAR FACE	5	35	80			S				9	9	1	9							77		11	6	420
	NORTH WALL HORIZ NEAR FACE	5	35	80			S				9	9	1	9							103		11	6	420
64	SOUTH WALL HORIZ FILLET	8	37	80			S				6	10	3	6	3	6					122	45	13	10	1367
	NORTH WALL HORIZ FILLET	8	37	80			S				6	10	2	8	2	8					148	45	12	2	1202
65	SOUTH WALL HORIZ TOP	8	2	80			S				9	9	3	8									13	5	72
	NORTH WALL HORIZ TOP	8	2	80			S				9	9	2	8									12	5	67
CB3	DOWELS TO BARRIER	5	20	50			S	E			4	4											4	4	91
CB4	DOWELS TO BARRIER	4	5	50			S				2	10											2	10	10
	PIER 1 GIRDER STOPS																								
150	HORIZONTAL	4	8	50			S				1	8											1	8	9
151	TOP TIES	5	12	72	T		S				1	5	2		2								6	4	80
	PIER 3 GIRDER STOPS																								
150	HORIZONTAL	4	8	50			S				1	8											1	8	9
151	TOP TIES	5	12	72	T		S				1	5	2		2								6	4	80
	COLUMNS																								
	PIER 2 COLUMNS																								
81	COLUMN AXIAL	8	32	54			S				29	2											30	6	2606
82	CORNER VERTS	5	24	50			S				18	11											18	11	474
83	COLUMN SPIRAL CENTER	6	2	67	T		S				2	5	41			3.56							321	3	966
	COLUMN SPIRAL TOP/BOT	6	4	67	T		S				2	5	13			3							106	10	643
	COLUMN SPIRAL IN BENT CAP	6	2	67	T		S				2	5	5			3							45	10	138
	COLUMN SPIRAL IN FOOTING	6	2	67	T		S				2	5	5			2.9							45	9	138
84	COLUMN TIES	4	176	71	T		S					6	1			1							1	7	187
	CROSSBEAM PIER 2																								
100	BOTTOM LONGITUDINAL	9	14	50			S				20	6											20	6	976
101	TOP LONGITUDINAL	7	13	50			S				20	6											20	6	545
102	TOP TRANSVERSE	7	42	80			S				5	9		10		10					90	90	7	5	637
103	TRANSVERSE LEGS	5	84	82			S				2			10	2	4					132	138	6	4	555
104	HORIZONTAL CORBEL TIES	5	84	52	T		S				5	9											6	11	606
	BOT. HORIZ. CORBEL TIE	5	42	52	T		S				5	2											6	4	278
105	VERTICAL CORBEL TIES	5	84	82	T		S				1		1	2							132		3	4	292
	INNER VERTICAL CORBEL TIE	5	84	82	T		S				1		1	5							132		3	7	314
	DIAPHRAGMS																								
	PIER 2 DIAPHRAGM																								

BENDING DIAGRAMS

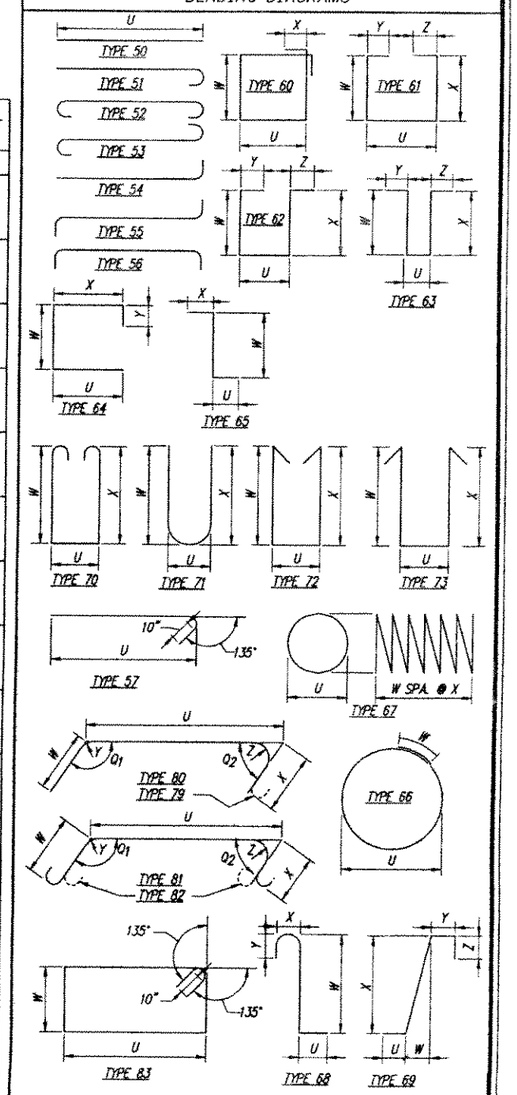

NOTE:

1. ALL REINFORCING BARS ON THIS SHEET SHALL BE AASHTO M-31 UNLESS SHOWN OTHERWISE.
2. REINFORCING FOR TRAFFIC BARRIERS AND GIRDERS NOT SHOWN IN THIS BAR LIST. SEE TRAFFIC BARRIER SHEET AND GIRDER SHEET.
3. BEND FOR TRANSVERSE BARS DUE TO ROADWAY CROWN CONDITIONS HAVE NOT BEEN SHOWN. THESE BARS SHALL BE BENT AS REQUIRED TO CONFORM TO THE CONFIGURATION OF THE STRUCTURE.
4. NUMBER AND LENGTH OF BARS TO BE DETERMINED BY THE CONTRACTOR FROM PLANS.

kpff Consulting Engineers
1201 Third Avenue, Suite 900
Seattle, Washington 98101
(206) 622-5822 Fax (206) 622-8130

CALL 48 HOURS BEFORE YOU DIG 1-800-424-5555

FILE	ENGR.	REVIEW	SCALE	DATE
	JEM	IH	NONE	

NO.	REVISION	BY	REVIEW	DATE

CITY OF KIRKLAND WASHINGTON

CITY OF KIRKLAND
PUBLIC WORKS DEPARTMENT
123 FIFTH AVENUE – KIRKLAND, WA 98033-6189 – (425) 828-1243

N.E. 100TH STREET BRIDGE

BAR LIST I

SHEET S55

S = Bar is included in substructure quantities.
F = Bar to be field welded.
T = Tie or Stirrup.
E = Bar is to be epoxy coated.
V = Bar dimensions vary between dimensions shown on this line and the following line.

MARK NO.	LOCATION	SIZE	NUMBER REQ'D	BEND TYPE	TIE OR STIR	FLD. WELD	SUBSTR.	EPOXY COAT	VARIES	NO. EACH	DIMENSIONS (Out to Out) U Ft.	U In.	W Ft.	W In.	X Ft.	X In.	Y Ft.	Y In.	Z Ft.	Z In.	θ1 Deg.	θ2 Deg.	LENGTH Ft.	LENGTH In.	WEIGHT Lbs.
120	TOP TRANSVERSE	10	10	50							16	2											16	2	696
121	LONGITUDINAL	5	9	50							16	2											16	2	152
122	LEGS	5	52	82	T						5	7		8	2	4					132	138	9	9	529
124	FRAMING BAR	4	11	50							3	9											3	9	28
	END DIAPHRAGMS																								
140	TOP/BOT. LONG. WEST	6	4	50							18	6											18	6	112
	TOP/BOT. LONG. EAST	6	4	50							20	2											20	2	122
141	INTERMEDIATE LONG. WEST	4	8	50							18	6											18	6	99
	INTERMEDIATE LONG. EAST	4	8	50							20	2											20	2	108
142	STIRRUP	4	62	80	T						5	7		8							90		6	3	259
144	TIES	4	31	56	T							10											1	7	33
145	UTILITY TRIM BARS	4	16	50							3	6											3	6	38
	INTERMEDIATE DIAPHRAGMS																								
160	FILLET BARS	7	16	50							15	9											15	9	516
161	TOP CONTINUOUS	8	4	50							15	9											15	9	169
162	INTERMEDIATE BARS	4	16	50							15	9											15	9	169
163	BOTTOM CONTINUOUS	9	4	50							15	9											15	9	215
164	STIRRUPS	4	112	71	T						3	5											3	5	256
	SLAB																								
200	LONGITUD TOP MID SPAN	5	28	50				E			83	6											83	6	2439
201	LONGITUD BOT MID SPAN	5	28	50							83	6											83	6	2439
202	LONGITUD TOP MID SPAN	5	16	50				E			85	6											85	6	1427
203	LONGITUD BOT MID SPAN	5	16	50							85	6											85	6	1427
204	LONGITUD TOP MID SPAN	5	16	50				E			91	6											91	6	1527
205	LONGITUD BOT MID SPAN	5	16	50							91	3											91	3	1523
206	LONGITUD TOP P2	5	26	50				E			40												40		1085
207	LONGITUD BOT P2	5	26	50							40												40		1085
208	LONGITUD TOP P2	5	28	50				E			30												30		877
209	LONGITUD BOT P2	5	28	50							30												30		877
210	TRANS TOP AT P1	5	9	52				E	V		19	8											12	9	120
											3	6													
211	TRANS TOP AT P3	5	14	52				E	V		21	4											13	7	199
											3	6													
212	TYPICAL TRANS TOP	5	336	52				E			19	8											20	10	7301
213	TRANS TOP AT TAPER	5	46	52				E	V		19	8											21	8	1040
											21	4													
215	TRANS BOT AT P1	5	27	80					V		19			5		5					162	162	11	8	329
											3	1		5							162				
216	TYPICAL TRANS BOT	5	327	80							19			5		5					162	162	19	10	6765
217	TRANS BOT AT TAPER	5	46	80					V		19			5		5					162	162	20	8	992
											19			5	2	1					162	162			
218	TRANS BOT AT P3	5	14	80					V		19			5	2	1					162	162	12	6	183
											1	5			2	1					162	162			
220	TRANS END BAR	5	2	52				E			20	2											21	4	45
221	TRANS END BAR	5	2	80							19			7		7					162	162	20	2	43
225	LONGITUDINAL TAPER TOP	5	1	69				E			1	8	25		1	8	2	2					28	11	31

S = Bar is included in substructure quantities.
F = Bar to be field welded.
T = Tie or Stirrup.
E = Bar is to be epoxy coated.
V = Bar dimensions vary between dimensions shown on this line and the following line.

MARK NO.	LOCATION	SIZE	NUMBER REQ'D	BEND TYPE	TIE OR STIR	FLD. WELD	SUBSTR.	EPOXY COAT	VARIES	NO. EACH	DIMENSIONS (Out to Out) U Ft.	U In.	W Ft.	W In.	X Ft.	X In.	Y Ft.	Y In.	Z Ft.	Z In.	θ1 Deg.	θ2 Deg.	LENGTH Ft.	LENGTH In.	WEIGHT Lbs.
226	LONGITUDINAL TAPER BOT	5	1	69							1	8	25		1	8	2	2					28	11	31
227	LONGITUDINAL TAPER TOP	5	1	69				E			1	8	15		1		2	2					18	10	20
228	LONGITUDINAL TAPER BOT	5	1	69							1	8	15		1		2	2					18	10	20
	PIER 3 MEDIAN CURB																								
300	LONGITUDINAL	4	16	80							25	9	7	9							175		33	6	359
301	CORNER BARS	4	4	64							1	3	2										3	3	9
302	CORNER BARS	4	4	64							2	2	2										4	2	12
303	VERTICAL LEGS	4	70	54							2	10											3	6	164
304	TRANSVERSE	4	35	50							3	9											3	9	88
305	VERTICAL LEGS AT RETURN	4	1	62								6	2	10									3	4	3
306	STIRRUPS	3	70	62				E				9	1										1	9	47
	ADA RAMP																								
400	FOOTING A-C LONGITUD	6	24	50			S				105	9											105	9	3813
	FOOTING D LONGITUD	6	8	50			S				66	9											66	9	803
401	DIAPH FOOTING LONGITUD	6	30	50			S				18	6											18	6	834
402	FOOTING TIE	4	385	56			S				2	6											3	10	986
403	FOOTING STIRR	4	385	72			S				2	6	1		1								5	3	1351
404	DIAPH FOOTING TIE	4	87	56			S				2	6											3	10	223
405	DIAPH FOOTING STIRR	4	87	72			S				2	6	1		1								5	3	306
406	WALL VERT CONT TO SCRN	5	167	54			S		V		27	10											24	3	4232
											19	1													
407	VERTICAL WALL A & RETURN	5	123	54			S		V		19	6											16	9	2149
	TO WALL B										12	4													
	VERTICAL WALL B	5	105	54			S		V		12	4											9	11	1086
											5	10													
	VERTICAL WALL C	5	67	54			S		V		5	10											4	9	335
											2	1													
408	TYPICAL VERT WALL B	5	212	65			S		V			8	20	3		4							17	5	3852
	TYPICAL VERT WALL C	5	134	65			S		V			8	12	7		4							10	4	1445
												8	12	7		4									
												8	6	1		4									
	TYPICAL VERT WALL D	5	132	65			S		V				11	1									9	6	1303
												8	6	10		4									
409	HORIZONTAL SCREEN WALL	5	117	50			S				12												12		1465
	HORIZONTAL WALLS A AND B	5	64	50			S				106												106		7076
	HORIZONTAL WALL C	5	18	50			S				104												104		1953
	HORIZONTAL WALL D	5	16	50			S				65												65		1085
410	DIAPHRAGM VERTS	5	140	54			S				13												13	10	2020
411	DIAPHRAGM HORIZ	5	130	56			S				8	1											9	9	1322
421	LONGITUDINAL DECK	4	54	50			S				83	4											83	4	3006
422	TRANSVERSE TOP DECK	5	236	61			S	E			7	10		9		9							9	4	2298
423	TRANSVERSE BOT DECK	5	236	50			S				7	10											7	10	1929
424	CONTINOUS CURB LONG	3	2	50			S	E			213												213		161
425	DIAPH W/O FTG STIRR	4	56	71	T		S					5	3	5	3	5							7	3	272
426	DIAPH W/O FTG HORIZ	4	21	56			S				8	1											9	5	133
427	DIAPH W/O FTG HORIZ	7	16	56			S				8	1											10	5	341

BENDING DIAGRAMS

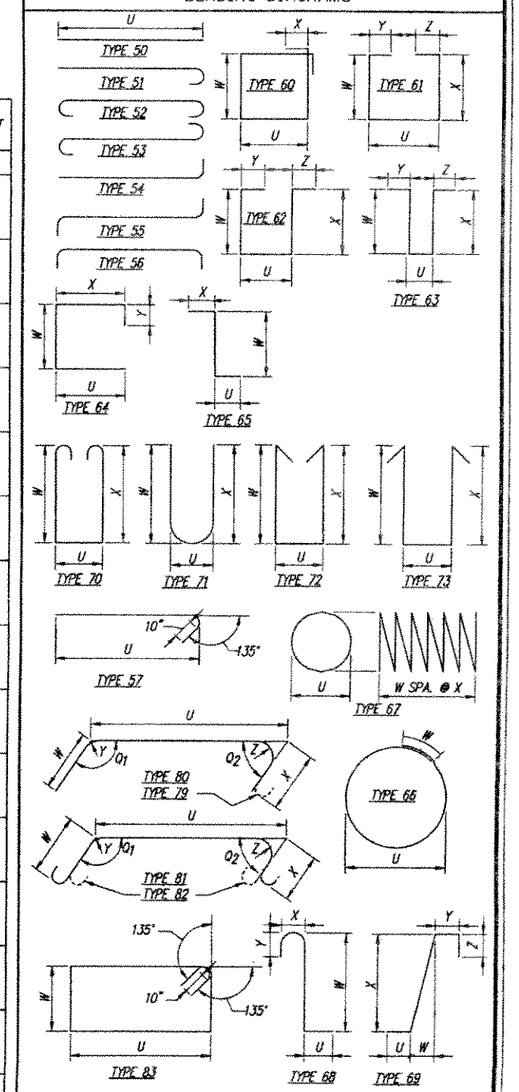

NOTE:

1. ALL REINFORCING BARS ON THIS SHEET SHALL BE AASHTO M-31 UNLESS SHOWN OTHERWISE.
2. REINFORCING FOR TRAFFIC BARRIERS AND GIRDERS NOT SHOWN IN THIS BAR LIST. SEE TRAFFIC BARRIER SHEET AND GIRDER SHEET.
3. BEND FOR TRANSVERSE BARS DUE TO ROADWAY CROWN CONDITIONS HAVE NOT BEEN SHOWN. THESE BARS SHALL BE BENT AS REQUIRED TO CONFORM TO THE CONFIGURATION OF THE STRUCTURE.

$ NUMBER AND LENGTH OF BARS TO BE DETERMINED BY THE CONTRACTOR FROM PLANS.

kpff Consulting Engineers
1201 Third Avenue, Suite 900
Seattle, Washington 98101
(206) 622-5822 Fax (206) 622-8130

CALL 48 HOURS BEFORE YOU DIG 1-800-424-5555

FILE	ENGR.	REVIEW	SCALE	DATE
	JEM	IH	NONE	

NO.	REVISION	BY	REVIEW	DATE

CITY OF KIRKLAND WASHINGTON

CITY OF KIRKLAND
PUBLIC WORKS DEPARTMENT
123 FIFTH AVENUE – KIRKLAND, WA 98033-6189 – (425) 828-1243

N.E. 100TH STREET BRIDGE

BAR LIST II

SHEET S56

S = Bar is included in substructure quantities.
F = Bar to be field welded.
T = Tie or Stirrup.
E = Bar is to be epoxy coated.
V = Bar dimensions vary between dimensions shown on this line and the following line.

MARK NO.	LOCATION	SIZE	NUMBER REQ'D	BEND TYPE	TIE OR STIR.	FLD. WELD	SUBSTR.	EPOXY COAT	VARIES	NO. EACH	DIMENSIONS (Out to Out) U Ft.	U In.	W Ft.	W In.	X Ft.	X In.	Y Ft.	Y In.	Z Ft.	Z In.	∠1 Deg.	∠2 Deg.	LENGTH Ft.	LENGTH In.	WEIGHT Lbs.
450	DOWELS AT SE WALL CURT	4	9	54			S				1	2											1	10	12
470	LONG. AT 7'-9" LANDING	4	34	61			S	E			7	6		3		3							8		182
480	CORNER BARS AT 5" WALL	5	20	65			S				3		3										6		126
	AT WALL / DIAPH	5	30	65			S				3		3										6		188
481	DIA TRIM BAR	4	24	50			S				4												4		65
	BRIDGE BARRIER BARS																								
S3	DOWELS TO SLAB	5	267	54				E			2												2	10	789
S4	DOWELS TO SLAB	4	133	54							1	6											2	2	193
	DOWELS TO BARRIER SLAB																								
S3	DOWEL BAR	5	1242	54							3	3											4	1	5290
S4	DOWEL BAR	4	621	54							2	6											3	2	1314
	UTILITY HANGERS																								
810	INSERT BAR	4	44	80								10		10		10					160	160	2	6	74

S = Bar is included in substructure quantities.
F = Bar to be field welded.
T = Tie or Stirrup.
E = Bar is to be epoxy coated.
V = Bar dimensions vary between dimensions shown on this line and the following line.

MARK NO.	LOCATION	SIZE	NUMBER REQ'D	BEND TYPE	TIE OR STIR.	FLD. WELD	SUBSTR.	EPOXY COAT	VARIES	NO. EACH	DIMENSIONS (Out to Out) U Ft.	U In.	W Ft.	W In.	X Ft.	X In.	Y Ft.	Y In.	Z Ft.	Z In.	∠1 Deg.	∠2 Deg.	LENGTH Ft.	LENGTH In.	WEIGHT Lbs.

BENDING DIAGRAMS

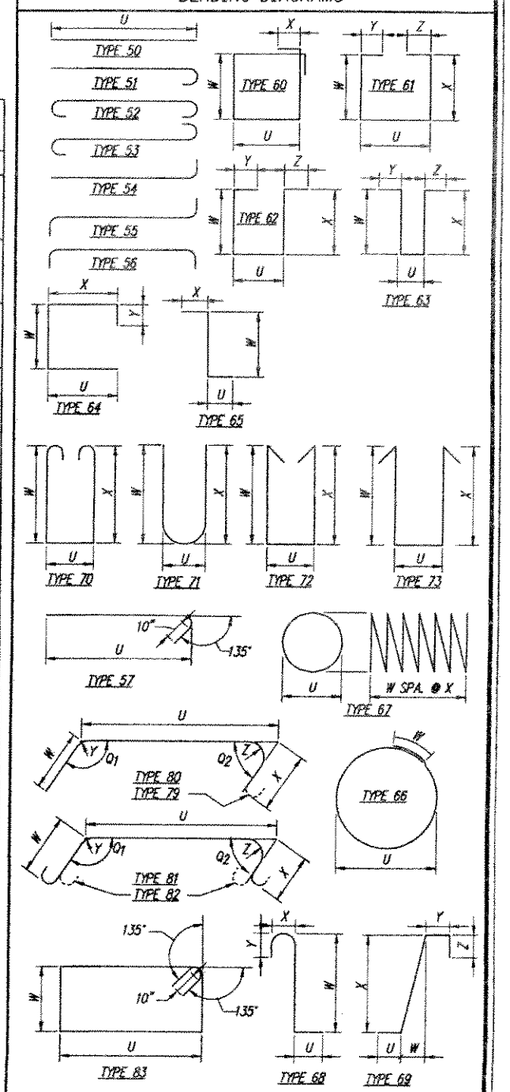

NOTE:

1. ALL REINFORCING BARS ON THIS SHEET SHALL BE AASHTO M-31 UNLESS SHOWN OTHERWISE.
2. REINFORCING FOR TRAFFIC BARRIERS AND GIRDERS NOT SHOWN IN THIS BAR LIST. SEE TRAFFIC BARRIER SHEET AND GIRDER SHEET.
3. BEND FOR TRANSVERSE BARS DUE TO ROADWAY CROWN CONDITIONS HAVE NOT BEEN SHOWN. THESE BARS SHALL BE BENT AS REQUIRED TO CONFORM TO THE CONFIGURATION OF THE STRUCTURE.

$ NUMBER AND LENGTH OF BARS TO BE DETERMINED BY THE CONTRACTOR FROM PLANS.

kpff Consulting Engineers
1201 Third Avenue, Suite 900
Seattle, Washington 98101
(206) 622-5822 Fax (206) 622-8130

CALL 48 HOURS BEFORE YOU DIG 1-800-424-5555

FILE	ENGR.	REVIEW	SCALE	DATE
	JEM	IH	NONE	

NO.	REVISION	BY	REVIEW	DATE

CITY OF KIRKLAND WASHINGTON

CITY OF KIRKLAND
PUBLIC WORKS DEPARTMENT
123 FIFTH AVENUE – KIRKLAND, WA 98033-6189 – (425) 828-1243

N.E. 100TH STREET BRIDGE

BAR LIST III

SHEET S57

ONE-LINE DIAGRAM

GROUND

120/24 15KVA — TRANSFORMER, SECONDARY VOLTAGE. PHASE AND RATING INDICATED AS APPLICABLE.

400 — CIRCUIT BREAKER, TRIP SHOWN, 3 POLE UNLESS OTHERWISE NOTED

POWER

GROUND ROD

CONNECTION POINT TO EQUIPMENT SPECIFIED FURNISHED AND INSTALLED UNDER OTHER SECTIONS. RACEWAY, CONDUCTOR AND CONNECTION IN THIS SECTION

J OR HH — GENERAL ELECTRICAL CONTROL OR WIRING DEVICE. NEMA 1 ENCLOSURE UNLESS OTHERWISE INDICATED, LETTER SYMBOLS OR ABBREVIATIONS INDICATE TYPE OF DEVICE

NONFUSED DISCONNECT SWITCH. SIZE INDICATED, 3 POLE UNLESS OTHERWISE INDICATED, NEMA 1 ENCLOSURE, WP= WEATHERPROOF (NEMA 3R)

MAJOR ELECTRICAL COMPONENT OR DEVICE, NAMEPLATE OR IDENTIFYING SYMBOL AS SHOWN

CONDUIT AND RACEWAY

P2-G23-1 (1,3,5) — HOME RUN, DESTINATION SHOWN, CIRCUIT NUMBERS IN PARENTHESIS, SEE PANEL SCHEDULE, ARROW DOES NOT ALWAYS POINT TO PANEL

CONDUIT AND CONDUCTORS AS SHOWN ON THE PLANS
4#10, 1#10G

CONDUIT CONTINUED ON REFERENCE DRAWING

LIGHTING

+9' F1 TYP — FIXTURE IDENTIFICATION TAG:
TOP – MOUNTING HEIGHT FOR PENDANT AND WALL MOUNTED FIXTURES
HEX – FIXTURE TYPE
BOTTOM – COMMENTS

L 30 — LIGHTING CONTACTOR, CURRENT RATING INDICATED, NEMA 1 ENCLOSURE UNLESS OTHERWISE INDICATED, SEE CONTROL DIAGRAM FOR NUMBER OF POLES

PC — PHOTOCELL LIGHT CONTROLLER

POLE MOUNTED LUMINAIRE, SEE SCHEDULE

WALKWAY LUMINAIRE, SEE SCHEDULE

DRAWING CONVENTIONS

A / E22 — **SECTION TITLE** / SCALE — SECTION TITLE UNDERLINE, E22 = REFERENCE WHERE SECTION IS TAKEN

1 / E23 — A = SECTION NUMBER, E22 = SHEET WHERE SECTION IS DRAWN

1 / E23 — **DETAIL TITLE** / SCALE — DETAIL TITLE UNDERLINE, E23 = REFERENCE WHERE DETAIL IS TAKEN

1 / E23 — 1 = DETAIL NUMBER, E23 = SHEET WHERE DETAIL IS DRAWN

A / E10 — **ELEVATION TITLE** / SCALE — A = ELEVATION NUMBER, E10 = SHEET WHERE ELEVATION IS TAKEN

A / E10 — A = ELEVATION NUMBER, E10 = SHEET WHERE ELEVATION IS DRAWN

N — NORTH ARROW

3 — NOTE

1 — REVISION REFERENCE

0 30 60 90
SCALE IN FEET — SCALE BAR

SCHEMATIC DIAGRAM

1 — CONTACT, NORMALLY OPEN WITH NEMA SIZE INDICATED AS APPLICABLE

1 — CONTACT, NORMALLY CLOSED WITH NEMA SIZE INDICATED AS APPLICABLE

ABBREVIATIONS

A	AMMETER, AMPERE
AIC	AMPERE INTERRUPTING CAPACITY
BRKR	BREAKER
C	CONDUIT
CB	CIRCUIT BREAKER
CC	COLOR CORRECTED
CKT	CIRCUIT
℄	CENTER LINE
CTRL	CONTROL
CU	COPPER
DISC	DISCONNECT
DN	DOWN
DS	DISCONNECT SWITCH
DWG	DRAWING
E	EMPTY, EXISTING
ELEC	ELECTRICAL
EXIST	EXISTING
F,FU	FUSE
G,GND	GROUND
GA	GAUGE
GALV	GALVANIZED
GFI	GROUND FAULT INTERRUPTER
GRS	GALVANIZED RIGID STEEL
HH	HANDHOLE
HPS	HIGH PRESSURE SODIUM
IC	INTERRUPTING CAPACITY
INCAN, INCAND	INCANDESCENT
J,JB	JUNCTION BOX
KV	KILOVOLT(S)
KVA	KILOVOLT AMPERE(S)
LC	LIGHTING CONTACTOR
M	MAGNETIC COIL
MH	METAL HALIDE
MIN	MINIMUM
N	NEUTRAL, NEW
NC	NORMALLY CLOSED
NEUT	NEUTRAL
NO	NORMALLY OPEN, NUMBER
NP	NAMEPLATE
Ø	PHASE, DIAMETER
P	PANEL, POLE
PB	PUSH-BUTTON
PC	PHOTOCELL, POWER CABLE
PH	PHASE
PNL	PANEL
PSE	PUGET SOUND ENERGY
PVC	POLYVINYL CHLORIDE
R	RELAY
SS	STAINLESS-STEEL
SW	SWITCH
TYP	TYPICAL
UG	UNDERGROUND
V	VOLTMETER, VOLT
W	WIRE
W/	WITH
W/O	WITHOUT
WP	WEATHERPROOF
XFMR	TRANSFORMER

LUMINAIRE SCHEDULE

FIXTURE TYPE	LAMP TYPE	VOLTS	LUM LOAD (IN VA)	LUMINAIRE DESCRIPTION	LAMPS TYPE & COLOR TEMP	FINISH	MOUNTING	MANUFACTURER/ SERIES #
F1	FLUOR	120V	154	NOMINAL 4' PEDESTRIAN OVERCROSS FIXTURE, 0.25" THICK AL HOUSING, AL PLATE 0.125" THICK ENCLOSURE DOOR, METHYLMETHECRYLATE PLASTIC LENS, VANDAL RESISTANT, UL LISTED FOR WET LOCATIONS	(1) 4' T12 VHO 1500mA (116 WATTS)	NATURAL	SURFACE	NUART #POC
S1	HPS	120V	144	DECORATIVE 12' POLE LIGHT, SEE CITY OF KIRKLAND DOWNTOWN STREET LIGHT SPECIFICATIONS: STANDARD PLAN NOS. CK-R.47A AND CK-R.47C INCLUDED IN THE SPECIFICATIONS	(1) 100W HPS (100 WATTS)	BLACK	POLE	LUMEC #CAND1-1A
S2	HPS	240V	144	NOMINAL 16"x20"x6" SHOEBOX AREA FIXTURE, AL HOUSING, AL LENS FRAME, HYDROFORMED SEMI-SPECULAR ANODIZED AL REFLECTOR, FLAT THERMAL AND IMPACT TEMPERED CLEAR GLASS LENS, FULLY SEALED AND GASKETED, INTEGRAL BALLAST, TYPE 2 CUTOFF DISTRIBUTION, 8" BRACKET ARM, 12' SQUARE STRAIGHT STEEL POLE, BAKED ENAMEL FINISH, UL LISTED FOR WET LOCATIONS	(1) 100W HPS (100 WATTS)	BLACK	POLE/ARM	STERNER #EX-20
S2A	HPS	240V	144	FIXTURE IS THE SAME AS TYPE S2 EXCEPT WALL BRACKET MOUNTED	SEE TYPE S2	SEE S2	WALL BRACKET	SEE TYPE S2
S3	HPS	240V	144	SAME AS TYPE S2 EXCEPT WITH CUTOFF FORWARD THROW LIGHT DISTRIBUTION	SEE TYPE S3	SEE S2	SEE S2	SEE TYPE S2

kpff Consulting Engineers
1201 Third Avenue, Suite 900
Seattle, Washington 98101
(206) 622-5822 Fax (206) 622-8130

ELCON ASSOCIATES, INC
ENGINEERS - CONSULTANTS
18000 INTERNATIONAL BLVD. SUITE 115
SEATTLE, WASHINGTON 98188
(206) 243-5022

CALL 48 HOURS BEFORE YOU DIG
1-800-424-5555

DIMITRIOS K. SIMKINS — STATE OF WASHINGTON — REGISTERED PROFESSIONAL ENGINEER
EXPIRES 1/4/2003

FILE	ENGR.	REVIEW	SCALE	DATE
EO.DWG	MOK	DKS	AS NOTED	JANUARY 2001

NO.	REVISION	BY	REVIEW	DATE

CITY OF KIRKLAND WASHINGTON

CITY OF KIRKLAND
PUBLIC WORKS DEPARTMENT
123 FIFTH AVENUE – KIRKLAND, WA 98033-6189 – (206)828-1243

N.E. 100TH STREET BRIDGE
LEGEND, ABBREVIATIONS AND LUMINAIRE SCHEDULE

SHEET
EO

KEYED NOTES:

1. HEIGHT INDICATED IS POLE HEIGHT. LUMINAIRE MOUNTING HEIGHT IS LOWER.
2. SEE BRIDGE SCREENING DETAILS ON STRUCTURAL DWGS FOR LUMINAIRE MOUNTING DETAIL.
3. ROUTE CONDUIT UNDER SIDEWALK. (SEE SHEET S26)
4. SEE DWG E5 FOR CONDUIT AND WIRE SIZES.
5. SEE LUMINAIRE DETAIL SHEET ON STRUCTURAL DRAWINGS FOR MOUNTING BRACKET.
6. 15'-0" DECORATIVE POLE, LUMEC CATALOG #APR4U-15, WITH OPTICOM OPTICAL DETECTOR MODEL #732 MOUNTED ON TOP.
7. PROVIDE SLEEVES UNDER BRIDGE TO ROUTE ELECTRICAL CONDUITS.
8. SEE DWG E4 FOR CONDUITS AND J-BOXES. J-BOXES ARE NOT SHOWN FOR CLARITY.

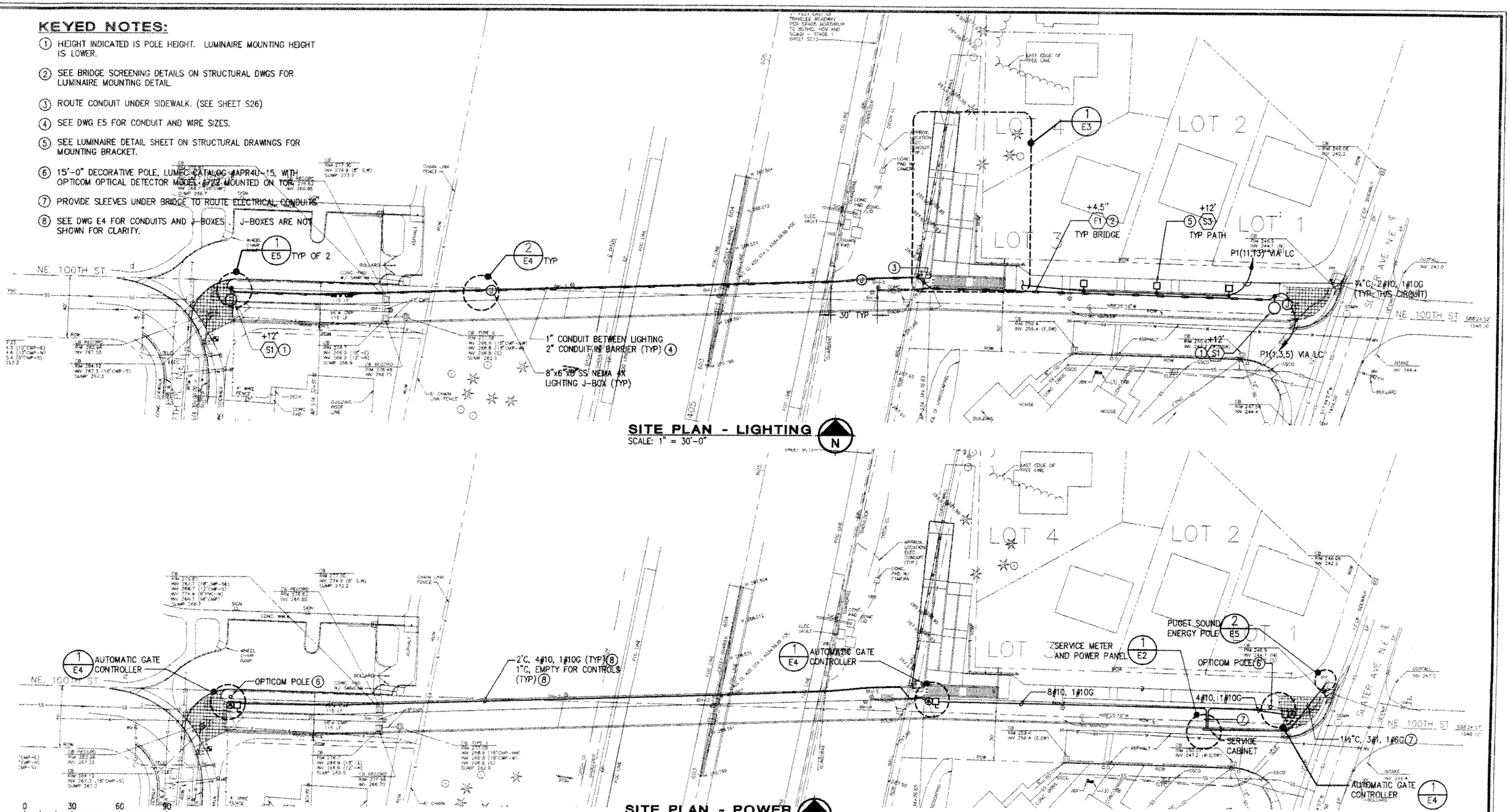

SITE PLAN - LIGHTING
SCALE: 1" = 30'-0"

SITE PLAN - POWER
SCALE: 1" = 30'-0"

S.33, T.26 N., R.5E., & S.4, T.25N., R.5E., W.M.

kpff Consulting Engineers
1201 Third Avenue, Suite 900
Seattle, Washington 98101
(206) 622-5822 Fax (206) 622-8130

ELCON ASSOCIATES, INC
ENGINEERS - CONSULTANTS
15000 INTERNATIONAL BLVD. SUITE 115
SEATTLE, WASHINGTON 98188
(206) 243-5022

CALL 48 HOURS BEFORE YOU DIG 1-800-424-5555

DIMITRIOS K. SIAMPAKIS, STATE OF WASHINGTON, 33791, REGISTERED PROFESSIONAL ENGINEER
EXPIRES 1/4/03

FILE	ENGR.	REVIEW	SCALE	DATE
E1.DWG	MOK	DKS	1" = 30'	JANUARY 2001

NO.	REVISION	BY	REVIEW	DATE

CITY OF KIRKLAND WASHINGTON

CITY OF KIRKLAND
PUBLIC WORKS DEPARTMENT
123 FIFTH AVENUE – KIRKLAND, WA 98033-6189 – (206)828-1243

N.E. 100TH STREET BRIDGE

BRIDGE LAYOUT
POWER AND LIGHTING

SHEET
E1

KEYED NOTES:

1. PHOTOCELL TO BE MOUNTED IN ENCLOSURE FABRICATED FROM 5/8" EXPANDED STEEL MESH WITH WELDED SEAMS AND MOUNTING FLANGES. HOT DIP AFTER FABRICATION.
2. SEE PANEL SCHEDULE ON E5 FOR ADDITIONAL LOADS AND BREAKER SIZES.
3. CONTRACTOR SHALL OBTAIN ALL SCHEMATIC, WIRING AND INTERCONNECTION DIAGRAMS FROM THE MANUFACTURER AND SUBMIT SAME TO THE ENGINEER FOR REVIEW, AND APPROVAL BEFORE STARTING WORK ON THE GATE CONTROL SYSTEM.

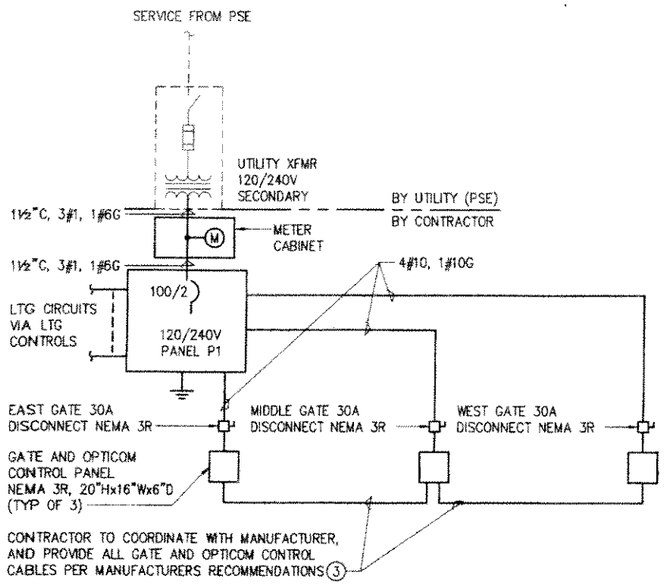

ONE-LINE DIAGRAM
SCALE: NONE

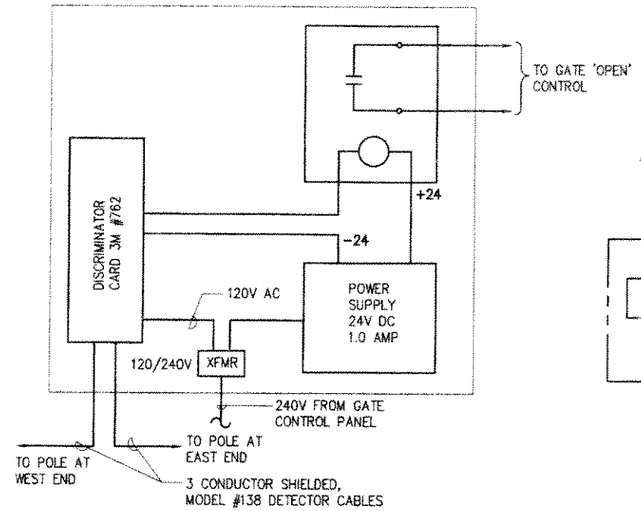

OPTICOM CONTROL DIAGRAM
MIDDLE GATE (OTHERS SIMILAR)
SCALE: NONE

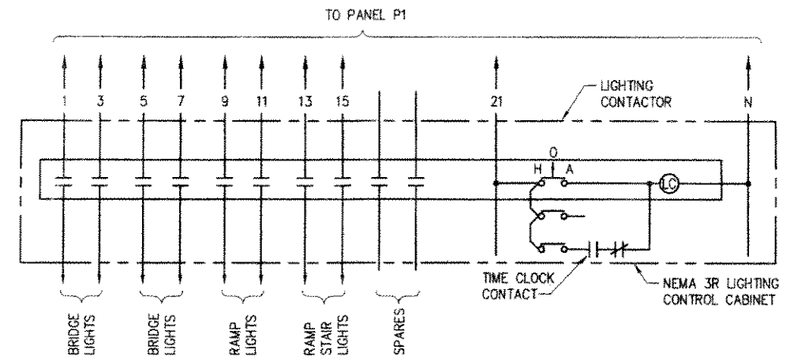

LIGHTING CONTROL
SCHEMATIC DIAGRAM
SCALE: NONE

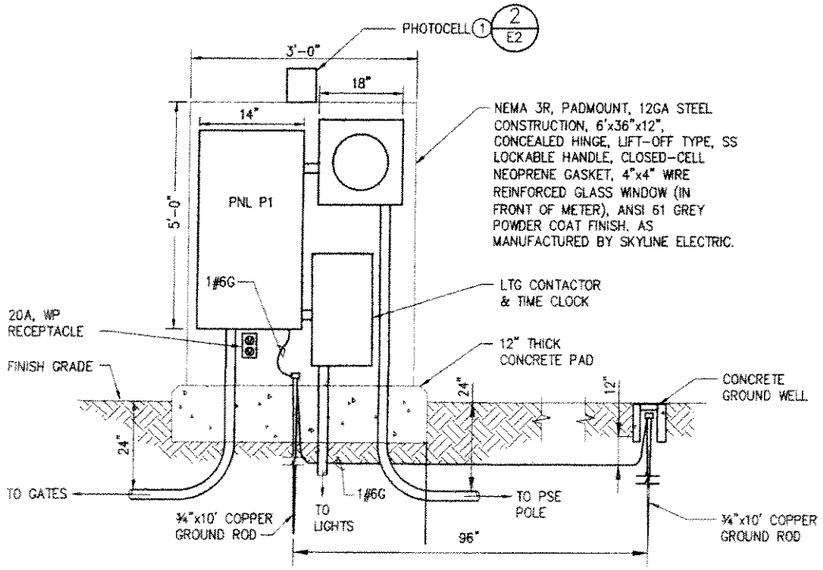

DETAIL
SERVICE CABINET 1/E1
SCALE: NTS

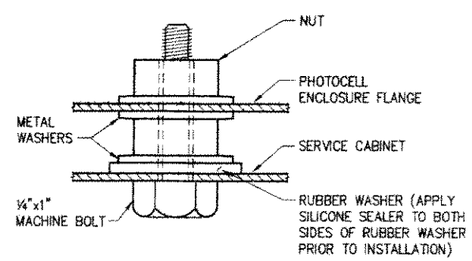

PHOTOCELL ENCLOSURE
MOUNTING DETAIL 2/E2
SCALE: NTS

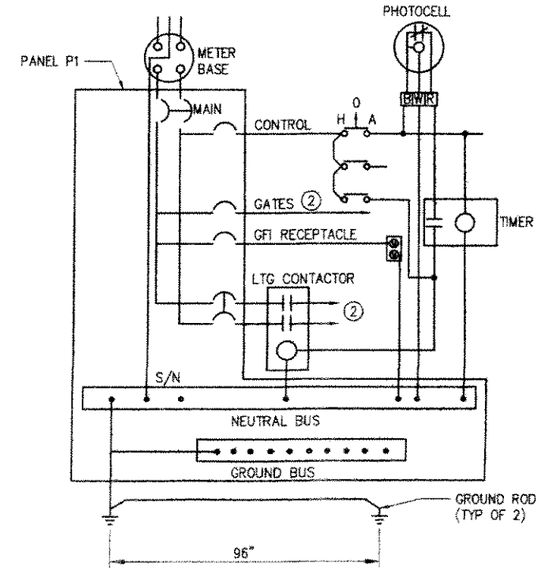

PARTIAL WIRING SCHEMATIC
SCALE: NONE

kpff Consulting Engineers
1201 Third Avenue, Suite 900
Seattle, Washington 98101
(206) 622-5822 Fax (206) 622-8130

ELCON ASSOCIATES, INC
ENGINEERS - CONSULTANTS
19000 INTERNATIONAL BLVD, SUITE 1115
SEATTLE, WASHINGTON 98188
(206) 243-5022

CALL 48 HOURS
BEFORE YOU DIG
1-800-424-5555

DIMITRIOS K. SIATRAS
STATE OF WASHINGTON
22791
REGISTERED
PROFESSIONAL ENGINEER
EXPIRES 1/4/2003

FILE	ENGR.	REVIEW	SCALE	DATE
E2.DWG	MOK	DKS	AS NOTED	JANUARY 2001

NO.	REVISION	BY	REVIEW	DATE

CITY OF KIRKLAND WASHINGTON

CITY OF KIRKLAND
PUBLIC WORKS DEPARTMENT
123 FIFTH AVENUE – KIRKLAND, WA 98033-6189 – (206)828-1243

N.E. 100TH STREET BRIDGE

DETAILS
AND DIAGRAMS

SHEET
E2

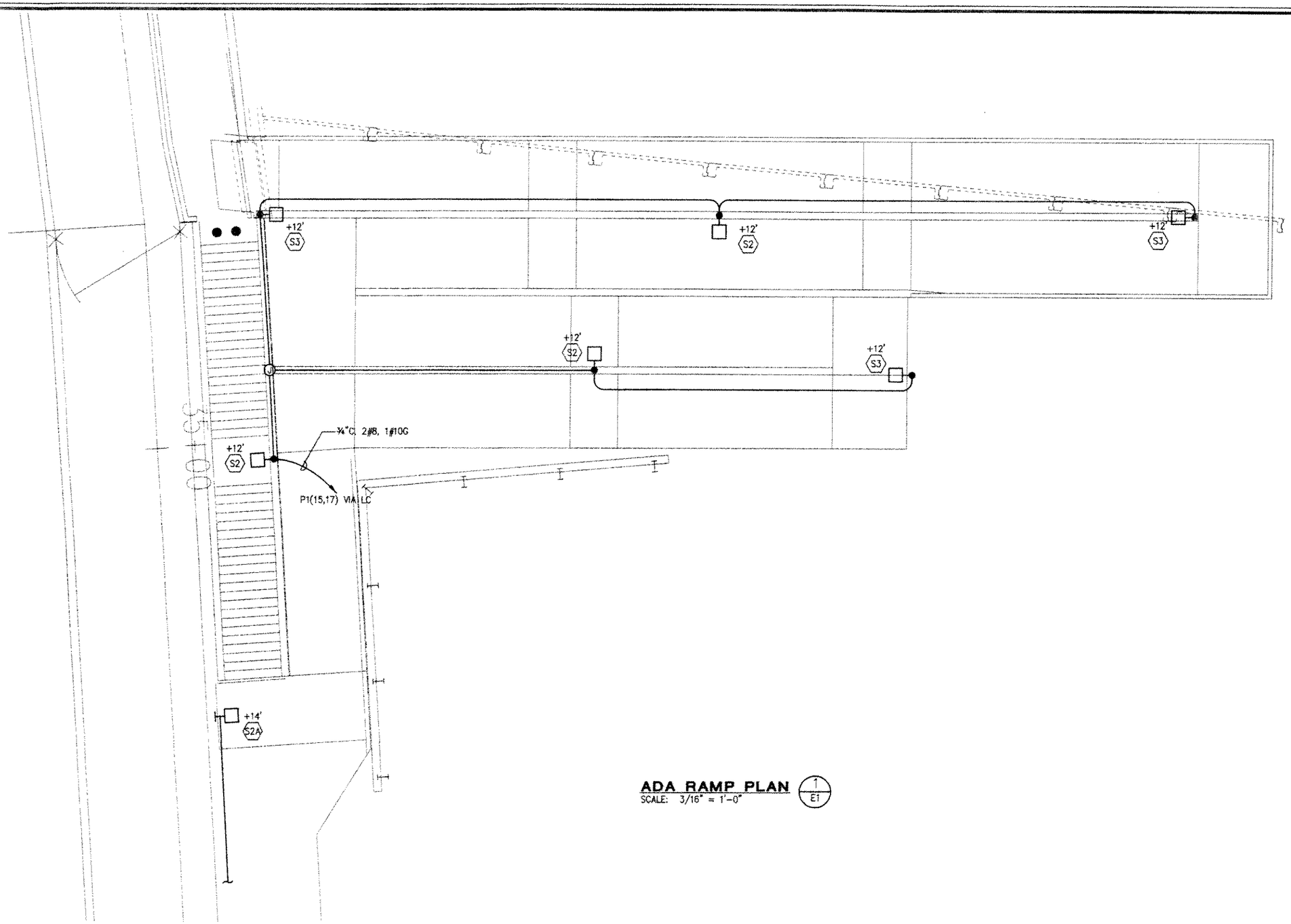

ADA RAMP PLAN (1/E1)
SCALE: 3/16" = 1'-0"

GENERAL NOTES:

1. ALL LIGHTING CIRCUITS ON THIS DRAWING CONSIST OF 2#10, 1#10G WIRES, UNLESS NOTED OTHERWISE.
2. SEE LUMINAIRE DETAIL SHEET ON STRUCTURAL DWGS FOR LUMINAIRE MOUNTING DETAILS.

kpff Consulting Engineers
1201 Third Avenue, Suite 900
Seattle, Washington 98101
(206) 622-5822 Fax (206) 622-8130

ELCON ASSOCIATES, INC
ENGINEERS - CONSULTANTS
18000 INTERNATIONAL BLVD. SUITE 115
SEATTLE, WASHINGTON 98188
(206) 243-5022

CALL 48 HOURS BEFORE YOU DIG
1-800-424-5555

DIMITRIOS K. SIAMPALIS, STATE OF WASHINGTON, REGISTERED PROFESSIONAL ENGINEER
EXPIRES 1/4/03

FILE	ENGR.	REVIEW	SCALE	DATE
E3.DWG	MOK	DKS	AS NOTED	JANUARY 2001

NO.	REVISION	BY	REVIEW	DATE

CITY OF KIRKLAND WASHINGTON

CITY OF KIRKLAND
PUBLIC WORKS DEPARTMENT
123 FIFTH AVENUE – KIRKLAND, WA 98033-6189 – (206)828-1243

N.E. 100TH STREET BRIDGE
ADA RAMP AND STAIR DETAIL

SHEET
E3

GENERAL NOTES:

1. COORDINATE JUNCTION BOX PLACEMENT WITH REBAR PLACEMENT.

KEYED NOTES:

1. PROVIDE LIQUID TIGHT FLEX CONDUIT FOR CONNECTIONS TO GATE OPERATOR AND FLASHING LIGHT.
2. FLASHING AMBER WARNING LIGHT MOUNTED ON TOP OF POST.

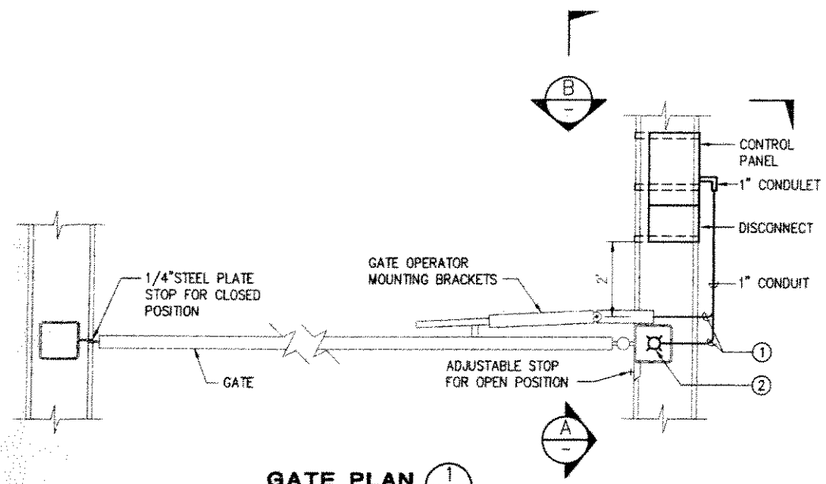

GATE PLAN (1/E1)
SCALE: NTS

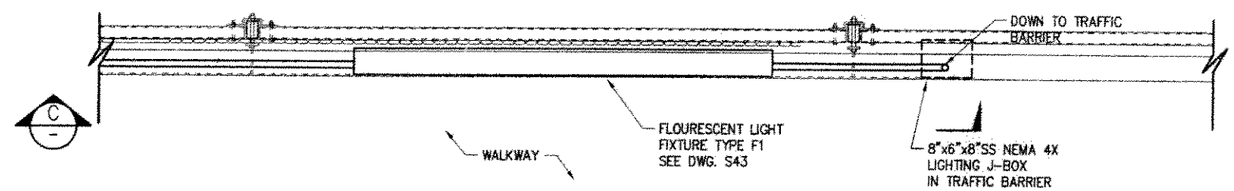

LIGHT FIXTURE PLAN (2/E1)
SCALE: NTS

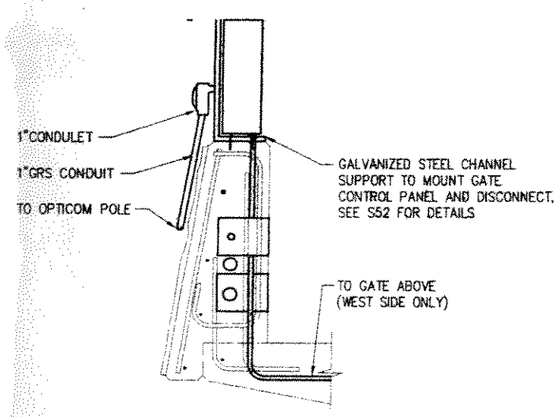

CONTROL PANEL MOUNTING ON TRAFFIC BARRIER (A)
SCALE: 1" = 1'-0"

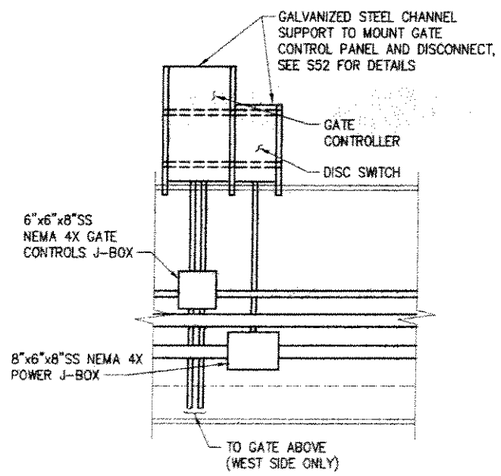

GATE CONTROL PANEL AND CONDUIT - SECTION (B)
SCALE: 1" = 1'-0"

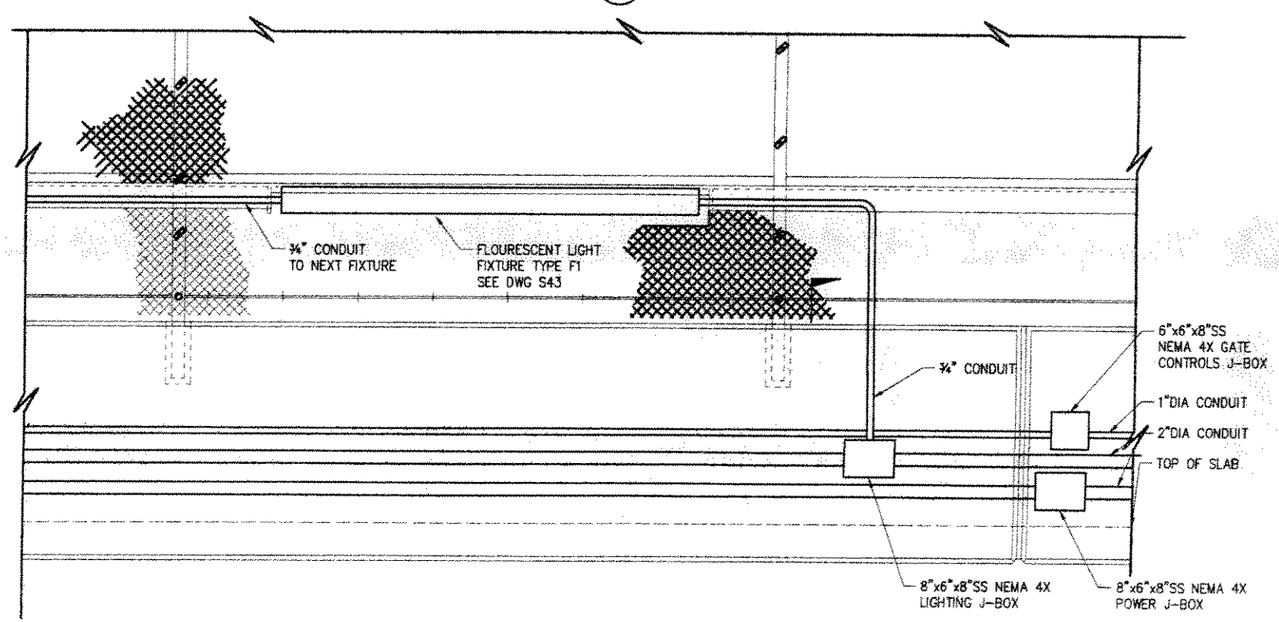

LIGHT FIXTURE AND CONDUIT SECTION (C)
SCALE: NTS

NOTE: THE JUNCTION BOX SPACING SHALL NOT BE MORE THAN 195'-0" APART ON EACH CONDUIT.

kpff Consulting Engineers
1201 Third Avenue, Suite 900
Seattle, Washington 98101
(206) 622-5822 Fax (206) 622-8130

ELCON ASSOCIATES, INC
ENGINEERS - CONSULTANTS
18000 INTERNATIONAL BLVD. SUITE 115
SEATTLE, WASHINGTON 98188
(206) 243-5022

CALL 48 HOURS BEFORE YOU DIG
1-800-424-5555

DIMITRIOS K. SIALIANOS, STATE OF WASHINGTON, REGISTERED PROFESSIONAL ENGINEER
1/2001
EXPIRES 1/4/2003

FILE	ENGR.	REVIEW	SCALE	DATE
E4.DWG	MOK	DKS	AS NOTED	JANUARY 2001

NO.	REVISION	BY	REVIEW	DATE

CITY OF KIRKLAND WASHINGTON

CITY OF KIRKLAND
PUBLIC WORKS DEPARTMENT
123 FIFTH AVENUE – KIRKLAND, WA 98033-6189 – (206)828-1243

N.E. 100TH STREET BRIDGE

DETAILS

SHEET E4

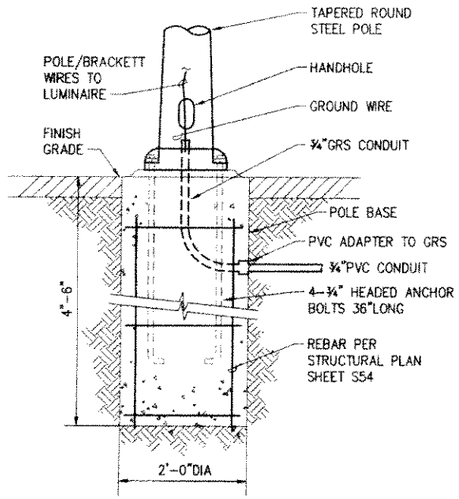

POLE BASE DETAIL (1/E1)

SCALE: NTS

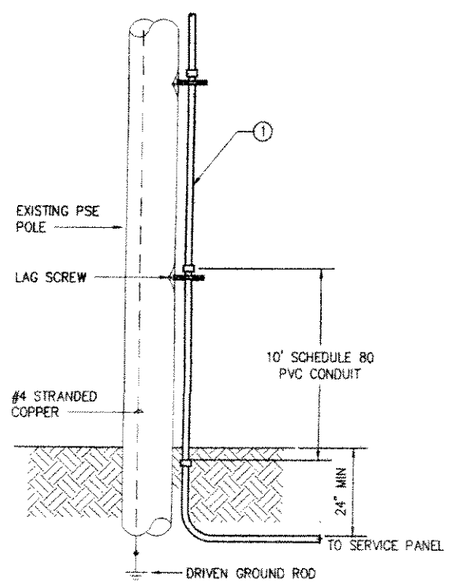

CONDUIT RISER CONSTRUCTION (2/E1)

SCALE: NTS

KEYED NOTES

1. CONTRACTOR SHALL INSTALL 10' OF CONDUIT AND WIRE UP POLE. ALSO PROVIDE ADDITIONAL CONDUIT (FASTEN TO POLE) AND COIL WIRE FOR PSE TO COMPLETE CONNECTION (APPROX 20') TO EXISTING SYSTEM. COORDINATE REQUIREMENTS FOR CONNECTION WITH PSE.

PANEL NAME:	P1	BUS RATING (Amp):	100 — 2 PHASE
LOCATION:	EAST SIDE OF BRIDGE	VOLTAGE:	120 / 240 — 3 WIRE
SHORT CIRCUIT RATING:	22,000 AIC	MAIN CB: 100A	
MOUNTING:	SURFACE	SURFACE MOUNTED	
		NUMBER OF POLES:	30

NO.	CIRCUIT DESCRIPTION	CB/PH	KVA	PH	KVA	CB/PH	CIRCUIT DESCRIPTION	NO.
1	BRIDGE LIGHTS – WEST	30/1	1.68	a	0.54	20/2	WEST GATE	2
3	BRIDGE LIGHTS – MIDDLE	30/1	2.31	b	0.54	–	*	4
5	BRIDGE LIGHTS – EAST	30/1	2.61	a	0.54	20/2	MIDDLE GATE	6
7	SPARE			b	0.54	–	*	8
9	SPARE			a	0.54	20/2	EAST GATE	10
11	SIDEWALK LIGHTS	20/2	0.29	b	0.54	–	*	12
13	*	–	0.29	a		20/2	SPARE	14
15	RAMP LIGHTS	20/2	0.43	b		–	*	16
17	*	–	0.43	a		20/2	SPARE	18
19	RECEPTACLE	20/1	0.80	b		–	*	20
21	LIGHTING CONTROL	20/1	0.80	a		20/1	SPARE	22
23	SPARE	20/1		b		20/1	SPARE	24
25	SPACE			a			SPACE	26
27	SPACE			b			SPACE	28
29	SPACE			a			SPACE	30

LOAD	Con Ld (KVA)	Dem Fct (%)	Dem Ld (KVA)
Sub Feed		100%	
Lighting	8.04	125%	10.05
Recept <10kVA	0.80	100%	0.80
Recept >10kVA		50%	
Motors all	3.24	100%	3.24
Largest	1.08	25%	0.27
Heating			
Cooling			
Kitchen		100%	
Misc. & Comp	0.80	100%	0.80
Misc Cont.		125%	

KVA/PHASE A:	7.43	CONNECTED LOAD IN KVA:	13
KVA/PHASE B:	5.45	DEMAND LOAD IN KVA:	15
		MAXIMUM AMPS PER PHASE:	62

Special Instructions:

NOTE 1: SERVICE ENTRANCE RATED MAIN PANEL

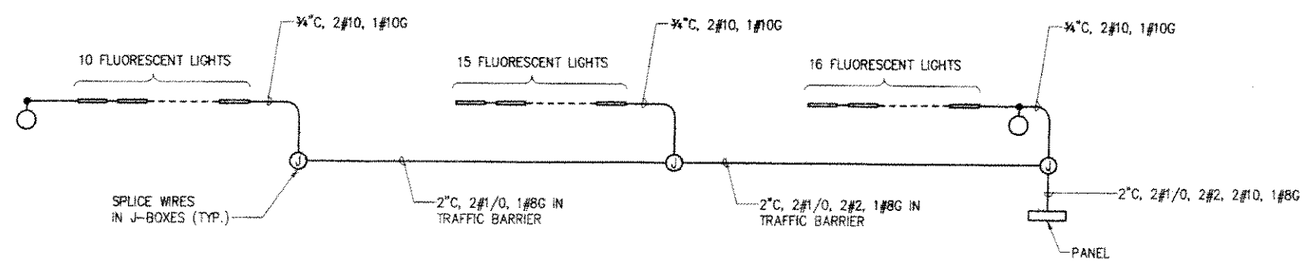

BRIDGE LIGHTING CONDUIT AND WIRING

SCALE: NTS

kpff Consulting Engineers
1201 Third Avenue, Suite 900
Seattle, Washington 98101
(206) 622-5822 Fax (206) 622-8130

ELCON ASSOCIATES, INC
ENGINEERS - CONSULTANTS
18000 INTERNATIONAL BLVD. SUITE 1115
SEATTLE, WASHINGTON 98188
(206) 243-5022

CALL 48 HOURS BEFORE YOU DIG 1-800-424-5555

DIMITRIOS K. SIALMAS — STATE OF WASHINGTON — 25781 — REGISTERED PROFESSIONAL ENGINEER — 1/2001 — EXPIRES 1/4/2003

FILE	ENGR.	REVIEW	SCALE	DATE
E5.DWG	RRB	DKS	AS NOTED	JANUARY 2001

NO.	REVISION	BY	REVIEW	DATE

CITY OF KIRKLAND WASHINGTON

CITY OF KIRKLAND
PUBLIC WORKS DEPARTMENT
123 FIFTH AVENUE – KIRKLAND, WA 98033-6189 – (206)828-1243

N.E. 100TH STREET BRIDGE

DETAILS AND SCHEDULES

SHEET E5

PLANTING SCHEDULE

SYM.	QTY.	SCIENTIFIC/COMMON NAME	SIZE/REMARKS
		TREES	
	7	Thuja plicata 'Fastigiata'/ HOGAN CEDAR	6'–8' Ht.; B&B/Cont.; Full & well branched. Single trunk not sheared.
	9	Fagus sylvatica 'Fastigiata'/ DAWYCK PURPLE BEECH	2" Cal.; B&B/Cont.; Straight central trunk & leader. Symmetrical branching habit.
	11	Liquidambar styraciflua 'Festival'/ FESTIVAL SWEET GUM	2" Cal.; B&B/Cont.; Straight central trunk & leader. Symmetrical branching habit.
	13	Chamaecyparis obtusa 'Gracilis'/ GRACILIS HINOKI FALSE CYPRESS	6'–8' Ht.; B&B/Cont.; Full & well branched. Straight trunk not sheared.
	2	Amelanchier alnifolia/ SASKATOON SERVICEBERRY	6'–8' Ht.; B&B/Cont.; Multi–trunked w/ min. 3 main trunks
▼	83	Parthenocissus tricuspidata 'Green Showers'/ GREEN SHOWERS BOSTON IVY	1 Gal./Cont.; Full, well rooted & well branched. Attach to wall per "Best Horticultural Practices".

SYM.	QTY.	SCIENTIFIC/COMMON NAME	SIZE/REMARKS
		GROUNDCOVERS	
	*	Mulch Only	See Specifications
	*	Wildflower Seed Mix	See Specifications

* Where quantities are not shown in the Plant Schedule the Contractor shall be responsible for determining plant quantities to be used.

PLANTING NOTES

1. VINE LOCATIONS TO BE FIELD VERIFIED BY ENGINEER.
2. LANDSCAPE CONTRACTOR SHALL BE RESPONSIBLE FOR ANY COORDINATION WITH SUB–CONTRACTORS AS REQUIRED TO ACCOMPLISH PLANTING OPERATIONS.
3. DISCREPANCIES WITH DRAWINGS AND/OR SPECIFICATIONS & SITE CONDITIONS SHALL BE BROUGHT TO THE ATTENTION OF THE LANDSCAPE ARCHITECT PRIOR TO PROCEEDING WITH CONSTRUCTION.
4. THE CONTRACTOR IS RESPONSIBLE FOR LOCATING UTILITIES PRIOR TO BEGINNING CONSTRUCTION.
5. SEE CIVIL DRAWINGS FOR EROSION CONTROL SEED REQUIREMENTS.

ABBREVIATIONS

&	AND
B&B	BALLED AND BURLAPPED
CAL.	CALIPER
MFR'S	MANUFACTURE(R)
MIN.	MINIMUM
MAX.	MAXIMUM
O.C.	ON CENTER
TYP.	TYPICAL
W/	WITH
CONT.	CONTAINER
GAL.	GALLON
SPEC'S.	SPECIFICATIONS
SYM.	SYMBOL
QTY.	QUANTITY
HT.	HEIGHT
SCHED.	SCHEDULE
DIA.	DIAMETER
#	NUMBER
%	PERCENT
ENGR.	ENGINEER
L.A.	LANDSCAPE ARCHITECT
P.S.I.	POUNDS PER SQUARE INCH
PVC	POLYVINYLCHLORIDE
ETC.	ETCETERA
C.F.	CUBIC FOOT
TXT	THREAD BY THREAD
EXIST'G	EXISTING
DRWG'S	DRAWINGS
SCHED.	SCHEDULE
NO.	NUMBER
GPM	GALLONS PER MINUTE
APPROX.	APPROXIMATE

LEGEND

A / L–2 — DETAIL IDENTIFICATION / SHEET IDENTIFICATION

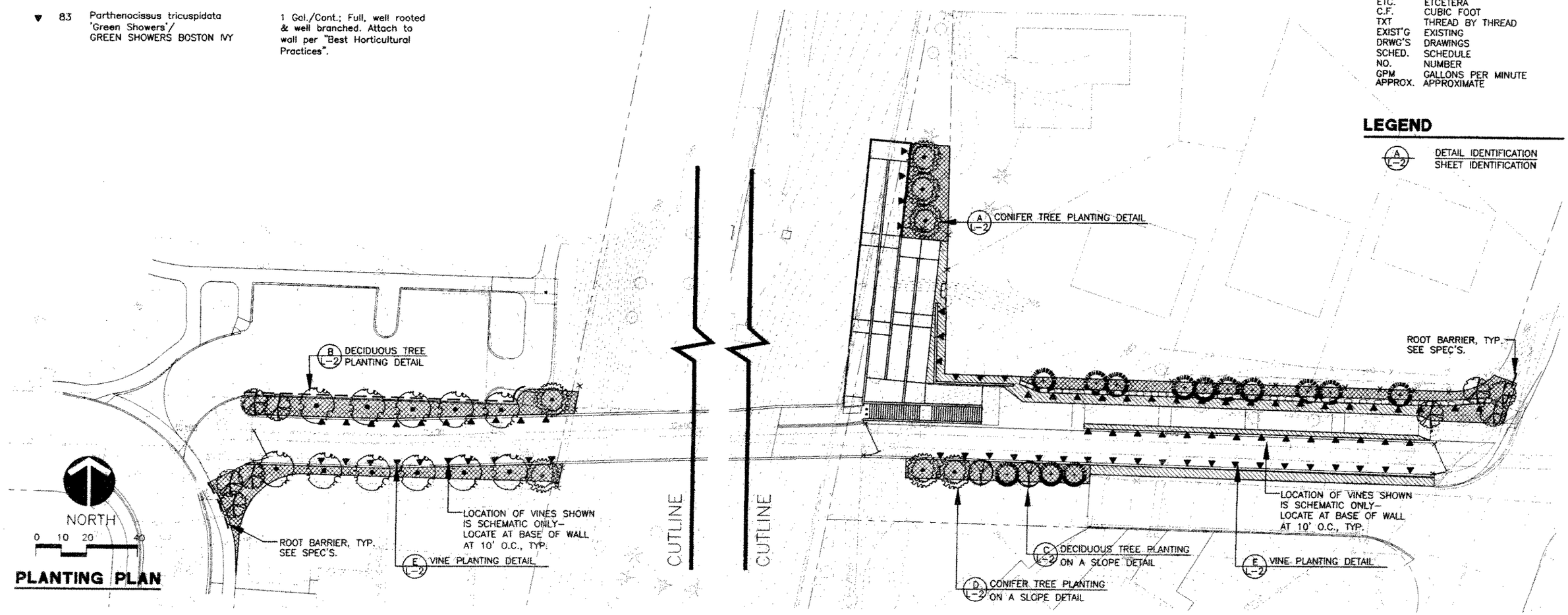

PLANTING PLAN

CALL BEFORE YOU DIG: 1–800–424–5555

kpff Consulting Engineers
1201 Third Avenue, Suite 900
Seattle, Washington 98101
(206) 622-5822 Fax (206) 622-8130

HOUGH BECK & BAIRD INC.
LANDSCAPE ARCHITECTURE PLANNING & URBAN DESIGN
1000 LENORA STREET, SUITE 516
SEATTLE, WASHINGTON 98121
(206) 682–3051

STATE OF WASHINGTON REGISTERED LANDSCAPE ARCHITECT
COLEMAN R. HOUGH
CERTIFICATE NO. 318

FILE	ENGR.	REVIEW	SCALE	DATE

NO.	REVISION	BY	REVIEW	DATE

CITY OF KIRKLAND WASHINGTON

CITY OF KIRKLAND
PUBLIC WORKS DEPARTMENT
123 FIFTH AVENUE – KIRKLAND, WA 98033–6189 – (206)828–1243

N.E. 100TH STREET BRIDGE
PLANTING PLAN, SCHEDULE, NOTES, ABBREVIATIONS & LEGEND

SHEET L–1

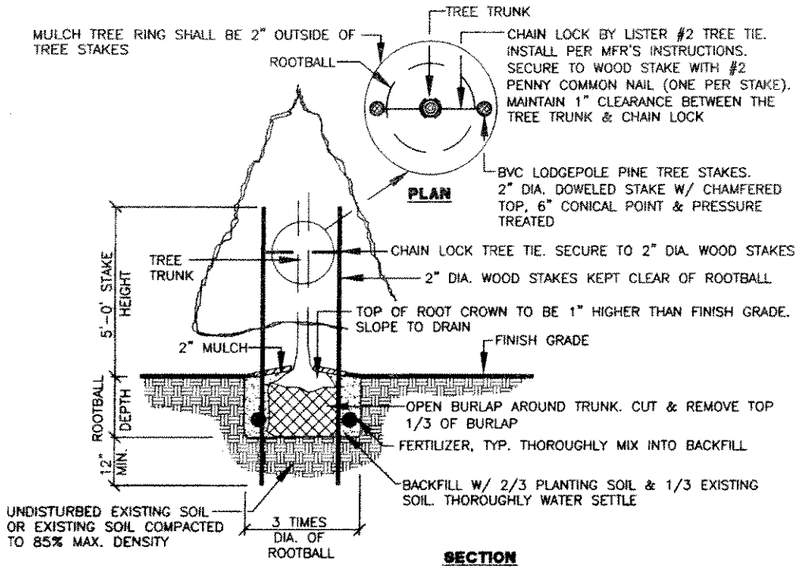

A CONIFER TREE PLANTING DETAIL

NOT TO SCALE

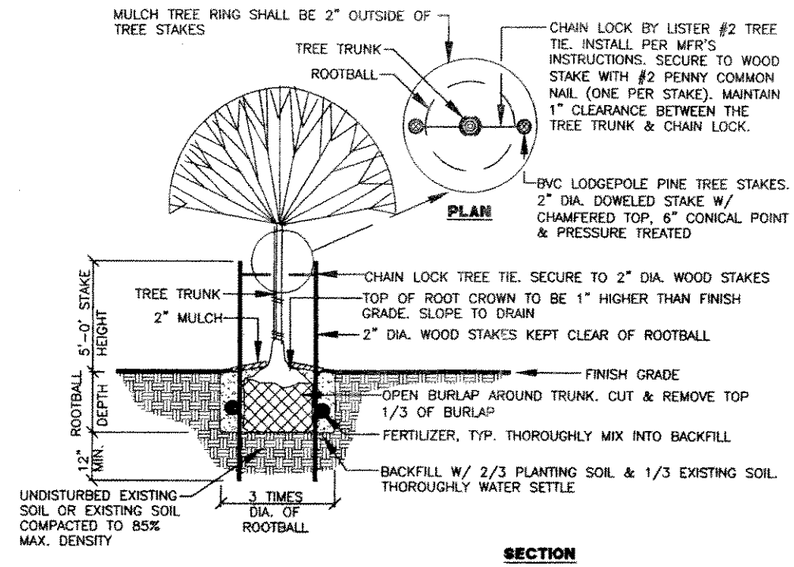

B DECIDUOUS TREE PLANTING DETAIL

NOT TO SCALE

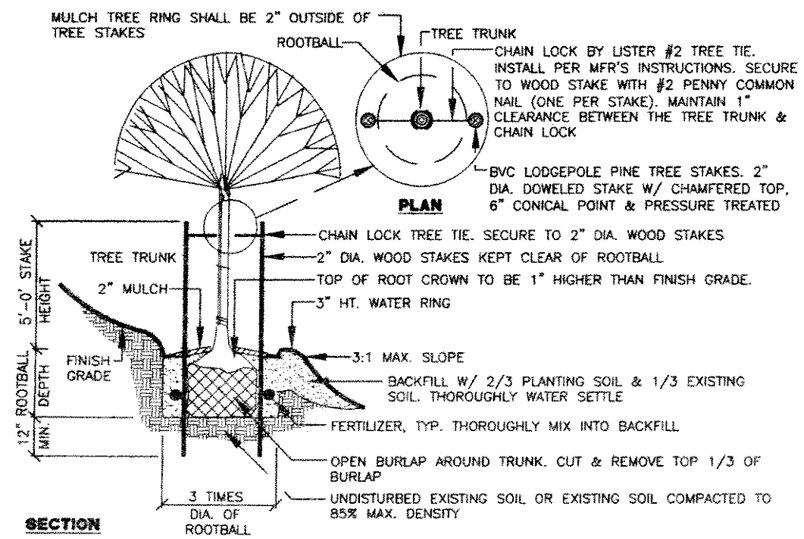

C DECIDUOUS TREE PLANTING ON A SLOPE DETAIL

NOT TO SCALE

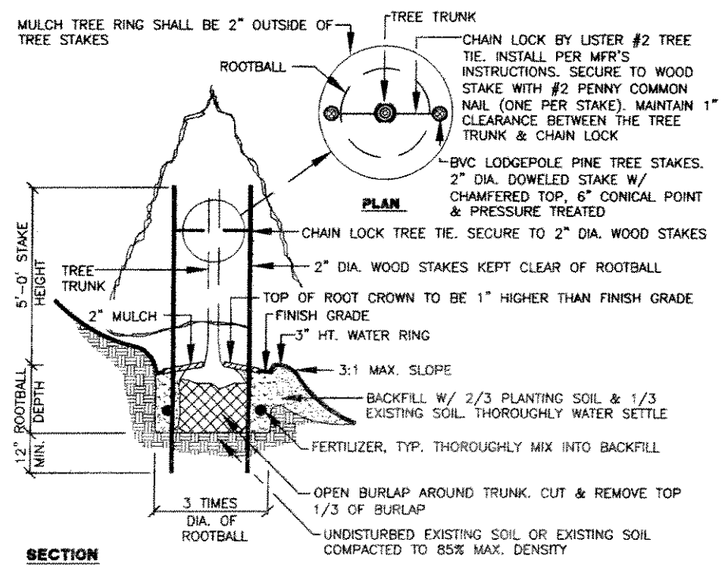

D CONIFER TREE PLANTING ON A SLOPE DETAIL

NOT TO SCALE

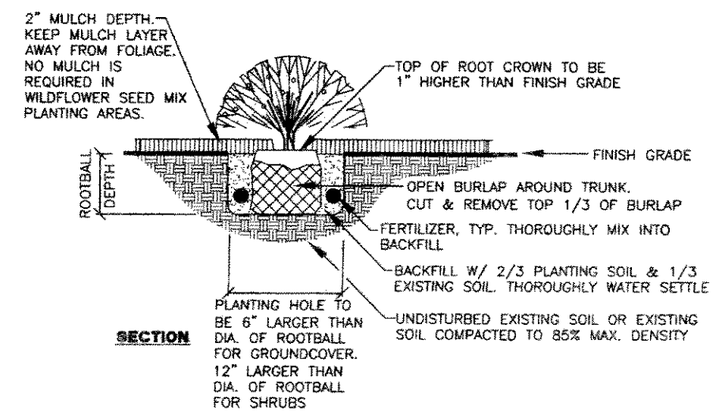

E VINE PLANTING DETAIL

NOT TO SCALE

CALL BEFORE YOU DIG: 1-800-424-5555

kpff Consulting Engineers
1201 Third Avenue, Suite 900
Seattle, Washington 98101
(206) 622-5822 Fax (206) 622-8130

HOUGH BECK & BAIRD INC.
LANDSCAPE ARCHITECTURE PLANNING & URBAN DESIGN
1000 LENORA STREET, SUITE 516
SEATTLE, WASHINGTON 98121
(206) 682-3051

STATE OF WASHINGTON REGISTERED LANDSCAPE ARCHITECT
COLEEN M. HOUGH
CERTIFICATE NO. 318

FILE	ENGR.	REVIEW	SCALE	DATE

NO.	REVISION	BY	REVIEW	DATE

CITY OF KIRKLAND WASHINGTON

CITY OF KIRKLAND
PUBLIC WORKS DEPARTMENT
123 FIFTH AVENUE - KIRKLAND, WA 98033-6189 - (206)828-1243

N.E. 100TH STREET BRIDGE
PLANTING DETAILS

SHEET
L-2