* FOR ADDITIONAL DITCH EXCAVATION QUANTITIES, SEE SHEETS DN9 THROUGH DN14.

DRAINAGE STRUCTURE NOTES

NOTE:
THE FIRST NUMBER OF THE "CODE" REFERS TO THE PLAN SHEET NUMBER OF THE CONTRACT PLANS. THE SECOND NUMBER REFERS TO THE CONSTRUCTION FEATURE FOUND ON THE PARTICULAR SHEET.

		REMOVING CATCH BASIN		DITCH EXCAVATION*	GRATE INLET TYPE 1 OR 2	HAND PLACED RIPRAP	FLARED END SECTION 12 IN. DIAM.	FLARED END SECTION 18 IN. DIAM.	FLARED END SECTION 24 IN. DIAM.	UNDERDRAIN PIPE 8 IN. DIAM.	SCHEDULE A CULV. PIPE 12 IN. DIAM.	CATCH BASIN TYPE 2 48 IN. DIAM.	TESTING STORM SEWER PIPE	PLAIN CONC. STORM SEWER PIPE 8 IN. DIAM.	PLAIN CONC. STORM SEWER PIPE 12 IN. DIAM.	PLAIN CONC. STORM SEWER PIPE 18 IN. DIAM.	CL. IV REINF. CONC. STORM SEWER PIPE 12 IN. DIAM.	CL. IV REINF. CONC. STORM SEWER PIPE 18 IN. DIAM.		TR. 5 ST. STORM SEWER PIPE 0.064 IN. TH. 12 IN. DIAM.	TR. 5 ST. STORM SEWER PIPE 0.064 IN. TH. 18 IN. DIAM.	TR. 5 ST. STORM SEWER PIPE 0.064 IN. TH. 24 IN. DIAM.	TR. 5 ST. STORM SEWER PIPE 0.064 IN. TH. 30 IN. DIAM.	SPECIAL PLASTIC DRAINAGE MARKING	STRUCTURE EXCAVATION CLASS B, INCL. HAUL	SHORING OR EXTRA EXCAVATION CLASS B	GRAVEL BACKFILL FOR PIPE BEDDING	GRAVEL BACKFILL FOR DRAIN	CONNECTION TO DRAINAGE STRUCTURE	MANHOLE UNDER 12 FT. 48 IN. DIAM. TYPE 1	MANHOLE 12 FT. TO 20 FT. 72 IN. DIAM. TYPE 2	CATCH BASIN TYPE 2 WITH FLOW RESTRICTOR/ OIL SEPARATOR	ADJUST CATCH BASIN	CLEANING EXISTING DRAINAGE STRUCTURE		ANCHOR ASSEMBLY-CURROGATED METAL PIPE	DETENTION POND EXCAVATION INCL. HAUL	SPECIAL BORROW INCL. HAUL	SEE GENERAL NOTE NO...
CODE	STATION	EACH		CY	EACH	CY	EACH	EACH	EACH	LF	LF	EACH	LF	LF	LF	LF	LF	LF		LF	LF	LF	LF	EACH	CY	SF	CY	CY	EACH	EACH	EACH	EACH	EACH	LS		EACH	CY	CY	
DR 1-1	L 457+00(74'LT) TO L 457+00(2.54'LT)				1																			1	5									LS					3
DR 1-2	L 457+00(2.54'LT) TO 457+00(2.54'RT)	1			1											5								1	14	105	1												3,21,22
DR 1-3	L 457+00(2.54'RT) TO L 457+00(113'RT)				1																			2	10	300								LS					3
DR 1-4	L 457+00(115'RT) TO L 457+33(43'RT)																																	LS					
DR 2-1	L 463+13(74'LT) TO L 463+13(2.54'LT)				1																			1	7	75								LS					3
DR 2-2	L 463+13(2.54'LT) TO L 463+13(2.54'RT)	1			1											5								1	15	135	1												3,21,22
DR 2-3	L 463+13(2.54'RT) TO L 463+13(86'RT)				1																			2	10	135								LS					3
DR 2-4	L 463+13(86'RT) TO L 463+13(156'RT)																									75								LS					
DR 2-5	L 466+50(2.54'LT) TO L 466+50(2.54'RT)	1			1										5									1	8		1												3,16
DR 2-6	L 466+50(2.54'RT) TO L 466+45(76'RT)				1																			2	6	90								LS					3
DR 2-7	L 466+45(76'RT) TO L 466+45(173'RT)																									75							1	LS					
DR 2-8	L 470+50(76'LT) TO L 470+50(2.54'LT)				1																			1	5									LS					3
DR 2-9	L 470+50(2.54'LT) TO L 470+50(2.54'RT)	1			1											5								1	13	120	1												3,21,22
DR 2-10	L 470+50(2.54'RT) TO L 470+50(97'RT)				1																			2	9	120								LS					3
DR 2-11	L 473+00(76'RT) TO L 473+00(103'RT)																							1									1	LS					3
DR 2-12	L 470+20(76'RT) TO L 470+20(110'RT)																							1									1	LS					3
DR 2-13	L 462+00(76'RT) TO L 462+00(94'RT)																							1									1	LS					3
																																							3,21,22
DR 3-1	L 475+56(18'LT)	1																							5														10
DR 3-2	L 476+00(68'RT)	1																							5														
DR 3-3	L 476+00(76.4'RT) TO L 476+00(105'RT)				1																			1	7	90								LS					3
DR 3-4	L 478+46(2.67'LT) TO L 476+00(2.67'RT)	1										1				5								1	22	180	1												3,21,22
DR 3-5	L 478+46(2.67'RT) TO L 478+46(106'RT)											1												1	15	180								LS					3
DR 3-6	L 479+00(64'RT)	1																							5														
DR 3-7	L 479+00(76.4'RT) TO L 479+00(104'RT)				1																			1	6	75								LS					3
DR 3-8	L 481+00(65'RT)	1																							5														
DR 3-9	L 481+00(76.4'RT) TO L 481+00(105'RT)				1																			1	7	90								LS					3
DR 3-10	L 483+05(2.54'LT) TO L 483+70(89'LT)	1			1																			2	7	75								LS					3
DR 3-11	L 483+05(2.54'RT) TO L 482+58(105'RT)				1																			2	6	75								LS					3
DR 3-12	L 483+85(89'RT) TO L 483+20(89'RT)				1	1							65				65								28	68	6												12
DR 3-13	L 478+46(2.54'LT) TO L 478+46(96'LT)																							1										LS					3
DR 3-14	L 477+00(70'RT)	1																							5														10
DR 3-15	L 483+16(90'RT) TO L 482+92(95'RT)																																	LS					
	SHEET TOTAL	11			17	1						2	65		5	20	65							28	225	2,063	11						4						

GENERAL NOTES

SEE DETAIL SHEET MD-10 FOR LOCATIONS OF MODIFICATIONS TO MEDIAN BARRIERS AND RETAINING WALL FOUNDATIONS.

THE CONCRETE BARRIER SPREAD FOUNDATION CUT SHALL BE MADE AS LISTED, HOWEVER, IF THE CUT OCCURED IN THE CONSTRUCTION JOINT OF BARRIER OR WALL, THE CONTRACTOR SHALL MOVE THE INLET CUT 10 FEET IN EITHER DIRECTION.

(1 AND 2 NOT USED)

3. SEE DD4 FOR PAVEMENT MARKING FOR DRAINAGE ITEMS.
4. SEE DD1 FOR ANCHOR ASSEMBLY.
5. ROCK LINED DITCH SEE DETAIL SHEET DD3.
6. CONNECT EXISTING PIPE TO NEW DRAINAGE STRUCTURE AND PLUG ABANDONNED PIPE PER 7-02.3(5) PLUGGING EXISTING CULVERTS.
7. CB TYPE 2 SHALL BE FITTED WITH SOLID METAL COVER.
8. EXTEND EXISTING PIPE IN KIND.
9. SEE STANDARD PLAN B-17 FOR PIPE ALTERNATES. GALVANIZED STEEL ALTERNATE SHALL HAVE TREATMENT 2.
10. REMOVE EXISTING CB, PLUG AND ABANDON EXISTING PIPE.
11. EXTEND EXISTING 12, 18 & 24 INCH PIPE TO DRAINAGE STRUCTURE.
12. DAYLIGHT TO SLOPE OR DITCH.
13. CB TYPE 2 72 INCH WITH FLOW RESTRICTOR/OIL SEPARATOR; SEE DETAIL SHEET DD 1, 2 & 3.
14. CONNECT TO EXISTING CATCH BASIN.
15. PLUG AND ABANDON EXISTING OUTLET PIPE.
16. ACCEPTABLE ALTERNATES ARE:
    A. GALVANIZED STEEL STORM SEWER PIPE. TR. 5. 0.064" THICK
    B. GALVANIZED STEEL STORM SEWER PIPE TR. 2 WITH WELDED OR GASKETED LONGITUDINAL SEAMS, 0.069" THICK, DIAM. 3" LARGER AND PROFILE 3" LOWER THAN SPECIFIED
    C. ALUMINIZED STEEL STORM SEWER PIPE TR. 5 0.064" THICK
    D. ALUMINIZED STEEL STORM SEWER PIPE. PLAIN WITH GASKET OR WELDED AND REINFORCED LONGITUDINAL SEAMS, 0.064" THICK, DIAM. 3" LARGER AND PROFILE 3" LOWER THAN SPECIFIED.
    E. ALUMINUM STORM SEWER PIPE TR. 5 0.060" THICK
    F. ALUMINUM STORM SEWER PIPE, PLAIN WITH GASKETED LONGITUDINAL SEAMS. 0.060"THICK, DIAM. 3" LARGER AND PROFILE 3" LOWER THAN SPECIFIED.
17. ACCEPTABLE ALTERNATIVES ARE SPIRAL RIB STORM SEWER PIPE, PLAIN ALUMINUM OR PLAIN NORROW PITCH ALUMINUM 0.060" THICK, AND SPIRAL RIB STORM SEWER PIPE, PLAIN ALUMINIZED STEEL OR PLAIN NARROW PITCH ALUMINIZED STEEL, 0.064" THICK.
18. AN ACCEPTABLE ALTERNATIVE SPIRAL RIB STORM SEWER PIPE, TR. 2 GALVANIZED STEEL OR TR 2 NARROW PITCH GALVANIZED STEEL 0.064" THICK.
19. THE EXISTING 18 INCH CONCRETE OUTLET PIPE ON SOUTH SIDE OF THE MANHOLE SHALL BE PLUGGED. THE INSIDE CHANNEL OF THE MANHOLE SHALL BE REDIRECTED TO A NEW 18 INCH OUTLET PIPE IN THE EAST DIRECTION.
20. ADJUST MANHOLE RIM TO GRADE.
21. ACCEPTABLE ALTERNATES FOR STROM SEWER PIPE ARE:
    - TR. 6 GALVANIZED STEEL STORM SEWER PIPE, 0.064" THICK.

    ACCEPTABLE ALTERNATES FOR CULVERT PIPE ARE:
    - TREATMENT 4 GALVANIZED STEEL CULVERT PIPE, 0.064" THICK.

    WHERE AN "N" OF 0.012 IS REQUIRED:
    - METAL ALTERNATES SHALL HAVE TREATMENT 6.
22. ACCEPTABLE ALTERNATES FOR SCHEDULE PIPE ARE:
    - THE GALVANIZED SCHEDULE 50 CULVERT PIPE ALTERNATE SHALL HAVE TREATMENT 4. ALUMINUMIZED STEEL AND ALUMUNUM ARE NOT ACCEPTABLE SCHEDULE CULVERT PIPE MATERIALS.

    WHERE AN "N" OF 0.012 IS REQUIRED:
    - METAL ALTERNATES SHALL HAVE TREATMENT 6.
23. ACCEPTABLE ALTERNATES FOR DRAIN AND UNDERDRAIN PIPE ARE LISTED IN THE STANDARD SPECIFICATIONS. NO TREATMENT IS REQUIRED FOR UNDERDRAIN PIPE.

    FOR DRAIN PIPE, WHEN CORROSIVE CONDITIONS ARE PARTICULARLY SEVERE AND JUSTIFICATION FOR REQUIRING TREATMENT CAN BE PROVIDED, TREATMENT 1 SHOULD BE USED FOR ALUMINUM AND STEEL ALTERNATES.

ANNE C. SYMONDS — STATE OF WASHINGTON — 15706 — REGISTERED PROFESSIONAL ENGINEER — 9/19/92 — EXPIRES 3/22/93

DESIGNED	B.A./C.R.	5/92		
DRAWN	B.S.	5/92		
REVIEWED	M.M.	6/92		
PROJ. ENGR.	R. KINOSHITA			
DIST. ADM.	R. Q. ANDERSON			
		DATE	REVISION	BY / APP'D

REGION NO.	STATE	FED. AID PROJ. NO.	SHEET NO.	TOTAL SHEETS
10	WASH	I-IM-405-3(791)		

JOB NUMBER 92W070

CONTRACT NO.

PROGRAM DEVELOPMENT DIVISION

APPROVED

Washington State Department of Transportation

HDR ENGINEERING INC. — ANNE SYMONDS & ASSOC., INC. CONSULTING ENGINEERS

SR 405
NORTHRUP TO BOTHELL
HOV AND SC&DI - STAGE I

DRAINAGE STRUCTURE NOTES

DN1

SHEET 45 OF 474 SHEETS

11:50AM

1"=1'

9/19/92

1025N2.DWG

* FOR ADDITIONAL DITCH EXCAVATION QUANTITIES, SEE SHEETS DN9 THROUGH DN14.

DRAINAGE STRUCTURE NOTES

NOTE:
THE FIRST NUMBER OF THE "CODE" REFERS TO THE PLAN SHEET NUMBER OF THE CONTRACT PLANS. THE SECOND NUMBER REFERS TO THE CONSTRUCTION FEATURE FOUND ON THE PARTICULAR SHEET.

CODE	STATION	REMOVING CATCH BASIN		DITCH EXCAVATION *	GRATE INLET TYPE 1 OR 2	HAND PLACED RIPRAP	FLARED END SECTION 12 IN. DIAM.	FLARED END SECTION 18 IN. DIAM.	FLARED END SECTION 24 IN. DIAM.	UNDERDRAIN PIPE 8 IN. DIAM.	SCHEDULE A CULV. PIPE 12 IN. DIAM.	CATCH BASIN TYPE 2 48 IN. DIAM.	TESTING STORM SEWER PIPE	PLAIN CONC. STORM SEWER PIPE 8 IN. DIAM.	PLAIN CONC. STORM SEWER PIPE 12 IN. DIAM.	PLAIN CONC. STORM SEWER PIPE 18 IN. DIAM.	CL. IV REINF. CONC. STORM SEWER PIPE 12 IN. DIAM.	CL. IV REINF. CONC. STORM SEWER PIPE 18 IN. DIAM.		TR. 5 ST. STORM SEWER PIPE 0.064 IN. TH. 12 IN. DIAM.	TR. 5 ST. STORM SEWER PIPE 0.064 IN. TH. 18 IN. DIAM.	TR. 5 ST. STORM SEWER PIPE 0.064 IN. TH. 24 IN. DIAM.	TR. 5 ST. STORM SEWER PIPE 0.064 IN. TH. 30 IN. DIAM.	SPECIAL PLASTIC DRAINAGE MARKING	STRUCTURE EXCAVATION CLASS B, INCL. HAUL	SHORING OR EXTRA EXCAVATION CLASS B	GRAVEL BACKFILL FOR PIPE BEDDING	GRAVEL BACKFILL FOR DRAIN	CONNECTION TO DRAINAGE STRUCTURE	MANHOLE UNDER 12 FT. 48 IN. DIAM. TYPE 1	MANHOLE 12 FT. TO 20 FT. 72 IN. DIAM. TYPE 2	CATCH BASIN TYPE 2 WITH FLOW RESTRICTOR/ OIL SEPARATOR	ADJUST CATCH BASIN	CLEANING EXISTING DRAINAGE STRUCTURE		ANCHOR ASSEMBLY-CURROGATED METAL PIPE	DETENTION POND EXCAVATION INCL. HAUL	SPECIAL BORROW INCL. HAUL	SEE GENERAL NOTE NO.
		EACH		CY	EACH	CY	EACH	EACH	EACH	LF	LF	EACH	LF	LF	LF	LF	LF	LF		LF	LF	LF	LF	EACH	CY	SF	CY	CY	EACH	EACH	EACH	EACH	EACH	LS		EACH	CY	CY	
DR 4-1	L 490+77(2.54'LT) TO L 490+77(92'LT)	1			1																			2	10	105								LS					3
DR 4-2	L 490+77(2.54'RT) TO L 490+77(87'RT)				1																			2	10	105								LS					3
DR 5-1	72-S 4+00(27'LT) TO 72-S 4+00(47'LT)				1								20		20									1	15		2												3,12,21,22
DR 5-2	72-S 6+59(18'LT) TO 72-S 6+59(35'LT)				1								17		17									1	13	90	1												3,12,21
DR 5-3	72-S 7+20(12'LT)	1																							5														10
DR 5-4	72-S 9+46(14'RT)	1																							5														10
DR 5-5	L 508+50(88'RT) TO L 508+50(2.67'RT)	1			1											10								1	10		1							LS					3,8,11,21,22
DR 5-6	L 508+50(2.67'RT) TO L 508+50(2.54'LT)	1										1				5								1	20	165	1												3,21,22
DR 5-7	L 508+50(2.54'LT) TO L 508+50(92'LT)				1																			2	14	165								LS					3
DR 5-8	L 518+22(2.67'RT) TO L 518+22(2.67'LT)	1										1										5		1	21	165	1												3,16,17
DR 5-9	L 518+22(2.67'LT) TO L 518+00(156'LT)											1												2	14	165								LS					3
DR 5-10	L 518+50(155'RT) TO L 518+22(2.67'RT)																							1		135								LS					3
DR 5-11	116th A-NE 8+35.44(47.5LT) TO 8+43.44(84.5'LT)					4							37								37			1			4							LS					
DR 6-1	116thAVE 17+30(30'LT)	1																							5														
DR 6-2	116thAVE 17+40(36.0'LT) TO 116A-N 6+62(63'RT)				1																			1		105								LS					3,6
DR 6-3	116A-N 2+25(50'RT) TO 116A-N 3+35(35'RT)			20		9																																	5
DR 6-4	116A-N 3+35(35'RT) TO 116A-N 4+20(50'RT)				1		1								86									2	43	75	8												3,21,22
DR 6-5	116A-N 3+90(8'RT)	1																							5														10
DR 6-6	116A-N 1+00(68'RT) TO 116A-N 3+00(105'RT)			15		19																																	5
DR 6-7	116A-N 3+00(105'RT) TO TN 7+60(36'RT)											25													10		2												9,21,22
DR 6-8	TN 7+60(36'RT) TO 116A-N 3+60(82'RT)			9		9																																	5
DR 6-9	116A-N 3+60(82'RT) TO 116A-N 3+85(70'RT)											30													22		3												9,21,22
DR 6-10	116A-N 3+85(70'RT) TO 116A-N 5+90(43'RT)			47		25																																	5
DR 6-11	116A-N 5+50(24'RT)	1																							5														10
DR 6-12	116A-N 5+90(43'RT) TO 116A-N 6+68(43'RT)				1								78		78									1	55	75	7												3,21,22
DR 6-13	116A-N 6+68(32'RT)	1																																					10
DR 6-14	116A-N 6+68(43'RT) TO 116A-N 8+65(36'RT)											1	197		197									1	159	1860	17												3,7,21,22
DR 6-15	116A-N 6+68(43'RT) TO 116A-N 6+68(63'RT)											1	20							20					12	355	2												7,8,21,22
DR 6-16	116A-N 6+95	1																							5														10,21,22
DR 6-17	116A-N 10+85(30'RT) TO L 534+15(205'RT)				1								150								150			1	81	82	17												3,21,22
DR 6-18	L 522+94(2.54'LT) TO L 524+68(2.54'LT)	1			1								174		174									1	91	82	16												3
DR 6-19	L 524+68(2.54'LT) TO L 526+62(1.5'LT)				1								194				194							1	91	75	16												3
DR 6-20	L 526+62(1.5'LT) TO L 528+88(0.46'RT)				1								226		226									1	125	2600	20												3,21,22
DR 6-21	L 528+88(0.46'RT) TO L 530+94(0.46'RT)	1			1								206		206									1	114	400	19												3,8,11,21,22
DR 6-22	L 530+94(0.46'RT) TO L 533+00(18'RT)				1								206		206									1	126	375	19												3,21,22
DR 6-23	S-72 0+80(98'LT) TO S-72 1+40(25'RT)																							2										LS					3
DR 6-24	L 533+00(18'RT) TO L 534+65(17'RT)				1								165							165				1	115	1500	15		1										3,14,21,22
DR 6-25	L 520+89(65'LT) TO L 523+35(65'LT)																							1									1	LS					3
DR 6-26	L 521+00(88'LT)																							1									1	LS					3
DR 6-27	L 522+57(85'LT) TO L 522+57(130'LT)																							1									1	LS					3
DR 6-28	L 523+35(65'LT) TO L 524+38(65'LT)																							2									1	LS					3
DR 6-29	L 525+97(65'LT) TO L 525+97(120'LT)																							2									1	LS					3
DR 6-30	LE 530+98(42'RT) TO LE 530+98(100'RT)																							2									1	LS					3
DR 6-31	S-72 1+40(25'RT) TO S-72 1+40(37'LT)																							2										LS					3
DR 6-32	L 523+55(102'LT) TO S-72 1+40(25'RT)																							1									1	LS					3
DR 6-33	L 522+84(78'RT) TO L 523+55(102'LT)																							1									1	LS					3
DR 6-34	N-116A 6+50(40'RT)																							1										LS					3
DR 6-35	116A-N 1+32(33'LT)																							1										LS					3
DR 6-36	116A-N 1+52(22'RT)																							1									1	LS					3
DR 6-37	116th AVE 15+89(30'RT)																							1									1	LS					3
DR 6-38	116thAVE 17+98(30'RT) TO 116thAVE 15+89(30'RT)																							1									1	LS					3
DR 6-39	116th AVE 13+14(18'RT)																							1									1	LS					3
DR 6-40	116A-N 3+25(25'RT)	1																																					10
DR 6-41	L 524+38(65'LT) TO L 525+97(65'LT)																							1										LS					3
DR 6-42	116thAVE 18+04(20'RT)																							1									1	LS					3
DR 6-43	LE 524+78(32'LT) TO LE 527+35(34'LT)									266																		22											
DR 6-44	LE 527+35(34'LT) TO LE 528+88(45'RT)													153																									21,22
	SHEET TOTAL	14		91	16	66	1			266		55	1,778	153	1,210	15	194			185	185	5		50	1,201	8,679	171	22	1				13						

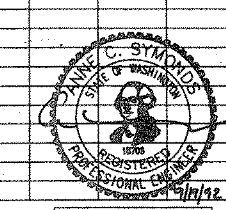

EXPIRES 3/22/93

DESIGNED	B.A./C.R.	5/92			
DRAWN	B.S.	5/92			
REVIEWED	M.M.	6/92			
PROJ. ENGR.	R. KINOSHITA				
DIST. ADM.	R. Q. ANDERSON				
		DATE	REVISION	BY	APP'D

REGION NO.	STATE	FED. AID PROJ. NO.	SHEET NO.	TOTAL SHEETS
10	WASH	I-IM-405-3(791)		

JOB NUMBER 92W070

CONTRACT NO.

PROGRAM DEVELOPMENT DIVISION

APPROVED

Washington State Department of Transportation

HDR ENGINEERING INC.

ANNE SYMONDS & ASSOC., INC.
CONSULTING ENGINEERS

SR 405
NORTHRUP TO BOTHELL
HOV AND SC&DI - STAGE I

DRAINAGE STRUCTURE NOTES

DN2

SHEET 46 OF 474 SHEETS

11:55AM 1"=1' 9/19/92 1025N3.DWG

* FOR ADDITIONAL DITCH EXCAVATION QUANTITIES, SEE SHEETS DN9 THROUGH DN14.

DRAINAGE STRUCTURE NOTES

NOTE:
THE FIRST NUMBER OF THE "CODE" REFERS TO THE PLAN SHEET NUMBER OF THE CONTRACT PLANS. THE SECOND NUMBER REFERS TO THE CONSTRUCTION FEATURE FOUND ON THE PARTICULAR SHEET.

CODE	STATION	REMOVING CATCH BASIN		DITCH EXCAVATION *	GRATE INLET TYPE 1 OR 2	HAND PLACED RIPRAP	FLARED END SECTION 12 IN. DIAM.	FLARED END SECTION 18 IN. DIAM.	FLARED END SECTION 24 IN. DIAM.	UNDERDRAIN PIPE 8 IN. DIAM.	SCHEDULE A CULV. PIPE 12 IN. DIAM.	CATCH BASIN TYPE 2 48 IN. DIAM.	TESTING STORM SEWER PIPE	PLAIN CONC. STORM SEWER PIPE 8 IN. DIAM.	PLAIN CONC. STORM SEWER PIPE 12 IN. DIAM.	PLAIN CONC. STORM SEWER PIPE 18 IN. DIAM.	CL. IV REINF. CONC. STORM SEWER PIPE 12 IN. DIAM.	CL. IV REINF. CONC. STORM SEWER PIPE 18 IN. DIAM.		TR. 5 ST. STORM SEWER PIPE 0.064 IN. TH. 12 IN. DIAM.	TR. 5 ST. STORM SEWER PIPE 0.064 IN. TH. 18 IN. DIAM.	TR. 5 ST. STORM SEWER PIPE 0.064 IN. TH. 24 IN. DIAM.	TR. 5 ST. STORM SEWER PIPE 0.064 IN. TH. 30 IN. DIAM.	SPECIAL PLASTIC DRAINAGE MARKING	STRUCTURE EXCAVATION CLASS B, INCL. HAUL	SHORING OR EXTRA EXCAVATION CLASS B	GRAVEL BACKFILL FOR PIPE BEDDING	GRAVEL BACKFILL FOR DRAIN	CONNECTION TO DRAINAGE STRUCTURE	MANHOLE UNDER 12 FT. 48 IN. DIAM. TYPE 1	MANHOLE 12 FT. TO 20 FT. 72 IN. DIAM. TYPE 2	CATCH BASIN TYPE 2 WITH FLOW RESTRICTOR/ OIL SEPARATOR	ADJUST CATCH BASIN	CLEANING EXISTING DRAINAGE STRUCTURE		ANCHOR ASSEMBLY–CORRUGATED METAL PIPE	DETENTION POND EXCAVATION INCL. HAUL	SPECIAL BORROW INCL. HAUL	SEE GENERAL NOTE NO...
CODE	STATION	EACH		CY	EACH	CY	EACH	EACH	EACH	LF	LF	EACH	LF	LF	LF	LF	LF	LF		LF	LF	LF	LF	EACH	CY	SF	CY	CY	EACH	EACH	EACH	EACH	EACH	LS		EACH	CY	CY	
DR 7-1	L 534+65(17'RT) TO 534+93(17'RT)																									500							1	LS					3
DR 7-2	L 534+75(184'RT) TO 534+97(158'RT)												33		33										25	105	3					1							13,14,21,22
DR 7-3	L 534+75(198'RT) TO 534+75(184'RT)												14								14				12		2												21,22
DR 7-4	L 534+97(213'RT)																																				1180	26	
DR 7-5	L 534+97(158'RT) TO L 534+93(17'RT)																							2										LS					3
DR 7-6	L 534+93(17'RT) TO L 534+93(160.5'LT)																							2										LS					3,20
DR 7-7	L 537+55(142'RT) TO L 537+32(17.5'RT)																							2										LS					3
DR 7-8	L 537+32(17.5'RT) TO L 537+06(118'LT)				1																			2	7	90								LS					3
DR 7-9	L 538+90(16'RT) TO L 537+32(17.5'RT)				1								158				158								81	75	14												
DR 7-10	L 540+43(14.5'RT)				1								153				153								64		14												
DR 7-11	L 544+50(80'LT)																							1									1	LS					3
DR 7-12	L 546+50(84'LT)																							1									1	LS					3
DR 7-13	L 535+00(185'RT)					11																																	
DR 7-14	L 534+15(205'RT)					7		1																															
DR 8-1	SR908 66+00(52'RT) TO N-E 9+50(25'RT)																							1									1	LS					3
DR 8-2	NE 9+50(25'RT) TO E-N 1+20(18'LT)																							2										LS					3
DR 8-3	W-N 0+64(20'RT)	1																							5														
DR 8-4	E-N 1+20(18'LT)																							1									1	LS					3
DR 8-5	N-W 7+68(18'LT) TO N-W 3+00(162'RT)																							1									1	LS					3
DR 8-6	N-W 4+30(24'LT) TO N-W 4+14(12'LT)																							1									1	LS					3
DR 8-7	N-W 4+14(12'LT) TO N-W 3+00(162'RT)																							1									1	LS					3
DR 8-8	N-E 8+15(8'LT)																							1									1	LS					3
DR 8-9	SR908 65+88(54'LT)																							1										LS					3
DR 8-10	W-N 0+62(15'RT)	1																							5														10
DR 9-1	SBC-D 67+07(123'LT) TO SBC-D 65+35(185'LT)											1	183								183				111	105	20												7,16,17
DR 9-2	SBC-D 64+50(260'LT) TO SBC-D 64+50(280'LT)												20								20				14		3												16,17
DR 9-3	SBC-D 65+35(185'LT)					7		1																															
DR 9-4	L 562+00(300'LT)																																				3250	89	
DR 9-5	SBC-D 64+50(280'LT) TO SBC-D 65+65(345'LT)					7		1					132								132				60	75	14					1							12,13,16,17
DR 9-6	S-E 2+15(75'RT) TO S-E 2+15(25'LT)																							1										LS					3
DR 9-7	E-S 9+65(8'RT) TO E-S 9+78(86'RT)																							2									1	LS					3
DR 9-8	E-S 4+23(8'LT)	1																							5														10
DR 9-9	E-S 4+50(22.5'LT) TO E-S 4+50(45'LT)				1	1	1						22							22				1	18	90	2												3,12,16,17
DR 9-10	E-S 3+45(8'LT)	1																							5														10
DR 9-11	E-S 3+45(20.5'LT) TO E-S 3+45(55'LT)				1	1	1						35							35				1	22	90	3									1			3,12,16,17
DR 9-12	E-S 2+00(14'LT)	1																							5														10
DR 9-13	E-S 2+00(16.5'LT) TO E-S 2+00(50'LT)				1	1	1						33							33				1	23	90	3												3,12,16,17
DR 9-14	L 549+70(15.54'RT) TO L 549+70(143'RT)				1																			2	12	165								LS					3
DR 9-15	L 549+70(0.5'RT)	1																							5														
DR 9-16	L 552+00(13.5'RT) TO L 554+27(10.54'RT)				1								227		227									1	125	83	20												3,16
DR 9-17	NBC-D 57+40(10'LT) TO L 554+27(10.54'RT)																							2		75							1	LS					3
DR 9-18	L 554+27(10.54'RT) TO L 556+58(6.54'RT)				1								231		231									1	127	83	25												3,16
DR 9-19	NBC-D 55+00(10'LT) TO L 556+58(6.54'RT)																							2		90							1	LS					3
DR 9-20	L 556+58(6.54'RT) TO L 558+50(2.54'RT)				1								192		192									1	139	1350	17												3,16
DR 9-21	NBC-D 62+18(10'LT) TO L 558+50(2.54'RT)																							1									1	LS					3
DR 9-22	L 558+50(2.54'RT) TO L 560+50(3.5'RT)				1								200		200									1	181	2520	18												3,8,11,16
DR 9-23	L 558+95(65'LT) TO L 558+50(2.54'RT)																							2									1	LS					3
DR 9-24	L 560+50(3.5'RT) TO L 560+50(2.8'LT)											1			5									1	15	262	1												3,16
DR 9-25	L 560+50(2.8'LT) TO L 562+05(2.54'LT)				1								155		155									1	112	905	14												3,8,11,16
DR 9-26	L 560+50(65'LT) TO L 560+50(2.54'LT)														8									3	5		1						1	LS					3,8,11,16
DR 9-27	L 562+25(65'RT) TO L 562+05(2.9'LT)																							1									1	LS					3
DR 9-28	L 562+05(2.9'LT) TO L 563+57(2.54'LT)				1								152				152							1	74	820	14												3
DR 9-29	L 563+59(65'RT) TO L 563+57(2.54'LT)																							1		90							1	LS					3
DR 9-30	L 563+57(2.54'LT) TO L 563+59(79'LT)				1										10									3	10		1							LS					3,8,11,16
	SHEET TOTAL	6			14	35	3	3				2	1,940		1,061		463			90	349			49	1,267	7,663	189					2	17			1	4,430	115	

ANNE C. SYMONDS
STATE OF WASHINGTON
18706
REGISTERED PROFESSIONAL ENGINEER
9/19/92
EXPIRES 3/22/93

DESIGNED	B.A./C.R.	5/92				
DRAWN	B.S.	5/92				
REVIEWED	M.M.	6/92				
PROJ. ENGR.	R. KINOSHITA					
DIST. ADM.	R. Q. ANDERSON					
		DATE	REVISION		BY	APP'D

REGION NO.	STATE	FED. AID PROJ. NO.	SHEET NO.	TOTAL SHEETS
10	WASH	I-IM-405-3(791)		

JOB NUMBER
92W070
CONTRACT NO.

PROGRAM DEVELOPMENT DIVISION

APPROVED

Washington State Department of Transportation

HDR ENGINEERING INC.

ANNE SYMONDS & ASSOC., INC.
CONSULTING ENGINEERS

SR 405
NORTHRUP TO BOTHELL
HOV AND SC&DI - STAGE I

DRAINAGE STRUCTURE NOTES

DN3

SHEET 47 OF 474 SHEETS

* FOR ADDITIONAL DITCH EXCAVATION QUANTITIES, SEE SHEETS DN9 THROUGH DN14.

DRAINAGE STRUCTURE NOTES

NOTE:
THE FIRST NUMBER OF THE "CODE" REFERS TO THE PLAN SHEET NUMBER OF THE CONTRACT PLANS. THE SECOND NUMBER REFERS TO THE CONSTRUCTION FEATURE FOUND ON THE PARTICULAR SHEET.

CODE	STATION	REMOVING CATCH BASIN	DITCH EXCAVATION *	GRATE INLET TYPE 1 OR 2	HAND PLACED RIPRAP	FLARED END SECTION 12 IN. DIAM.	FLARED END SECTION 18 IN. DIAM.	FLARED END SECTION 24 IN. DIAM.	UNDERDRAIN PIPE 8 IN. DIAM.	SCHEDULE A CULV. PIPE 12 IN. DIAM.	CATCH BASIN TYPE 2 48 IN. DIAM.	TESTING STORM SEWER PIPE	PLAIN CONC. STORM SEWER PIPE 8 IN. DIAM.	PLAIN CONC. STORM SEWER PIPE 12 IN. DIAM.	PLAIN CONC. STORM SEWER PIPE 18 IN. DIAM.	CL. IV REINF. CONC. STORM SEWER PIPE 12 IN. DIAM.	CL. IV REINF. CONC. STORM SEWER PIPE 18 IN. DIAM.	TR. 5 ST. STORM SEWER PIPE 0.064 IN. TH. 12 IN. DIAM.	TR. 5 ST. STORM SEWER PIPE 0.064 IN. TH. 18 IN. DIAM.	TR. 5 ST. STORM SEWER PIPE 0.064 IN. TH. 24 IN. DIAM.	TR. 5 ST. STORM SEWER PIPE 0.064 IN. TH. 30 IN. DIAM.	SPECIAL PLASTIC DRAINAGE MARKING	STRUCTURE EXCAVATION CLASS B, INCL. HAUL	SHORING OR EXTRA EXCAVATION CLASS B	GRAVEL BACKFILL FOR PIPE BEDDING	GRAVEL BACKFILL FOR DRAIN	CONNECTION TO DRAINAGE STRUCTURE	MANHOLE UNDER 12 FT. 48 IN. DIAM. TYPE 1	MANHOLE 12 FT. TO 20 FT. 72 IN. DIAM. TYPE 2	CATCH BASIN TYPE 2 WITH FLOW RESTRICTOR/ OIL SEPARATOR	ADJUST CATCH BASIN	CLEANING EXISTING DRAINAGE STRUCTURE	ANCHOR ASSEMBLY-CURROGATED METAL PIPE	DETENTION POND EXCAVATION INCL. HAUL	SPECIAL BORROW INCL. HAUL	SEE GENERAL NOTE NO...
		EACH	CY	EACH	CY	EACH	EACH	EACH	LF	LF	EACH	LF	LF	LF	LF	LF	LF	LF	LF	LF	LF	EACH	CY	SF	CY	CY	EACH	EACH	EACH	EACH	EACH	LS	EACH	CY	CY	
DR 9-31	L 563+59(79'LT) TO SBC-D 67+07(123'LT)																					2									1	LS				3,6,16
DR 9-32	L 560+50(65'LT) TO L 563+59(79'LT)											300		300									204		27		1									
DR 9-33	NBC-D 55+00(7'LT) TO L 552+00(13.5'RT)																					1		75							1	LS				3
DR 9-34	L 560+50(12'LT)	1																					5													8,11
DR 9-35	L 558+50(1'LT)	1																					5													
DR 9-36	L 550+10(88'LT)																					1									1	LS				3
DR 9-37	SBC-D 52+72(24'LT)																					1									1	LS				3
DR 9-38	E-S 0+00(14'LT)																					1									1	LS				3
DR 9-39	L 557+40(65'LT)																					1									1	LS				3
DR 9-40	L 562+05(12'LT)	1																					5													
DR 9-41	L 563+57(3.5'LT)	1																					5													
DR 9-42	L 549+85(135'LT) TO 549+70(15.54'RT)											15		15								2	14		1							LS				3,8,11,16
DR 9-43	S-E 7+50(60'RT) TO S-E 7+60(70'LT)				1																	2										LS				3
DR 9-44	S-E 6+55(15'LT) TO S-E 6+55(54'LT)				1																	2									1	LS				3
DR 9-45	E-N 6+25(32'LT) TO E-N 6+25(44'RT)																					2										LS				3
DR 9-46	L 549+70(14.3'RT)																															LS				3
DR 9-47	L 558+95(65'LT) TO L 560+50(65'LT)																															LS				
DR 9-48	SBC-D 64+91(280'LT)				6																			210												
DR 9-49	L 562+05(3.5'RT) TO L 562+05(2.9'LT)										1			6								1	2		1											16
DR 9-50	L 563+57(2.54'LT)								24																	2										
DR 9-51	L 559+42(1'RT) TO L 563+90(12'RT)								462																	37										
DR 10-1	L 565+85(4.13'LT) TO L 567+62(4.13'LT)			1								177				177						1	88	75	16											3
DR 10-2	L 567+70(12'LT)	1																					5													
DR 10-3	L 567+70(66'RT) TO L 567+72(4.13'LT)																					1									1	LS				3
DR 10-4	SBC-D 72+05(10'RT) TO L 567+62(4.13'LT)											15						15				2	6		1						1	LS				3,8,11,21,22
DR 10-5	L 569+55(65'RT) TO L 569+60(4.13'LT)																					1									1	LS				3
DR 10-6	L 569+60(4.1'LT) TO SBC-D 73+20(12'RT)	1		1														10				1	13		1							LS				3,8,11,21,22
DR 10-7	SBC-D 73+20(12'RT) TO SBC-D 72+05(10'RT)			1																		1	10	120								LS				3
DR 10-8	L 571+40(66'RT) TO L 571+55(4.13'LT)																					1									1	LS				3
DR 10-9	L 571+55(4.13'LT) TO SBC-D 74+80(10'RT)	1		1												10		10				1	13		1							LS				3,8,11,21,22
DR 10-10	SBC-D 74+80(10'RT) TO SBC-D 73+20(12'RT)																					1									1	LS				3
DR 10-11	L 573+25(66'RT) TO L 573+45(4.13'LT)																					1									1	LS				3
DR 10-12	L 573+45(4.13'LT) TO SBC-D 77+60(14'RT)	1		1														8				1	12	75	1							LS				3,8,11,21,22
DR 10-13	SBC-D 77+60(14'RT) TO SBC-D 77+68(46'LT)																					2									1	LS				3
DR 10-14	L 574+50(4.1'LT) TO L 575+29(4.1'LT)			1								79				79						1	33		7											3
DR 10-15	L 575+07(65'RT) TO L 575+29(4.13'LT)																					1									1	LS				3
DR 10-16	L 575+29(4.1'LT) TO L 575+35(80'LT)			1								10		10								1	10	68	1							LS				3,8,11,21,22
DR 10-17	L 576+29(3.21'LT) TO L 575+29(4.13'LT)			1								100				100						1	47	75	9											3
DR 10-18	W-N 8+25(10'RT)	1																					5													10
DR 10-19	L 577+50(2.5'LT) TO L 577+50(63'LT)	1		1																		1	9									LS				3
DR 10-20	SW 5+48(75'RT)																					1									1	LS				3
DR 10-21	W-N 10+54(3'RT)	1																					5													10
DR 10-22	L 576+58(78'LT)																					1									1	LS				3
DR 10-23	L 565+78(15'LT)	1																					5													10
DR 10-24	L 577+50(63'LT) TO L 577+50(107'LT)																					2									1	LS				3
DR 10-25	N-W 1+60(15'RT)																					1									1	LS				3
DR 10-26	L 565+78(120'RT)	1																				1									1	LS				3
DR 10-27	L 575+35(80'LT) TO L 575+45(135'LT)																					1									1	LS				3
DR 10-28	W-N 6+35(80'LT) TO L 569+55(65'RT)																															LS				
DR 10-29	N-W 3+00(162'LT) TO L 567+70(66'RT)																															LS				
DR 10-30	N-W 8+04(12'LT)																					1										LS				3
DR 10-31	L 567+62(4.13'LT)											15		15								1	10	75	1			1								3
DR 10-32	L 567+72(4.13'LT) TO L 567+62(4.13'LT)			1										10								2	8	75												3,8,11,21,22
DR 10-33	SBC-D 74+80(10'RT) TO SBC-D 75+38(115'LT)																					2										LS				3
DR 10-34	SBC-D 79+70(38'LT) TO L 575+45(135'LT)																					1										LS				3
DR 10-35	L 575+45(135'LT) TO LW 573+98.9(150'LT)																					1										LS				3,15,19
	SHEET TOTAL	13		10	8				486		1	711		356		366		43				50	519	848	67	39	1	1			20					

ANNE C. SYMONDS
STATE OF WASHINGTON
18706
REGISTERED PROFESSIONAL ENGINEER
9/19/92
EXPIRES 3/22/93

DESIGNED	B.A./C.R.	5/92	
DRAWN	B.S.	5/92	
REVIEWED	M.M	6/92	
PROJ. ENGR.	R. KINOSHITA		
DIST. ADM.	R. Q. ANDERSON		
		DATE	REVISION

BY | APP'D

REGION NO.	STATE	FED. AID PROJ. NO.	SHEET NO.	TOTAL SHEETS
10	WASH	I-IM-405-3(79I)		

JOB NUMBER 92W070
CONTRACT NO.

PROGRAM DEVELOPMENT DIVISION

APPROVED

Washington State Department of Transportation

HDR ENGINEERING INC.

ANNE SYMONDS & ASSOC., INC.
CONSULTING ENGINEERS

SR 405
NORTHRUP TO BOTHELL
HOV AND SC&DI - STAGE I

DRAINAGE STRUCTURE NOTES

DN4

SHEET 48 OF 474 SHEETS

12:05PM 9/19/92 1"=1' DN4.DWG

12:00PM
1" = 1'
9/18/92
1025N5.DWG

* FOR ADDITIONAL DITCH EXCAVATION QUANTITIES, SEE SHEETS DN9 THROUGH DN14.

DRAINAGE STRUCTURE NOTES

NOTE:
THE FIRST NUMBER OF THE "CODE" REFERS TO THE PLAN SHEET NUMBER OF THE CONTRACT PLANS. THE SECOND NUMBER REFERS TO THE CONSTRUCTION FEATURE FOUND ON THE PARTICULAR SHEET.

CODE	STATION	REMOVING CATCH BASIN		DITCH EXCAVATION *	GRATE INLET TYPE 1 OR 2	HAND PLACED RIPRAP	FLARED END SECTION 12 IN. DIAM.	FLARED END SECTION 18 IN. DIAM.	FLARED END SECTION 24 IN. DIAM.	UNDERDRAIN PIPE 8 IN. DIAM.	SCHEDULE A CULV. PIPE 12 IN. DIAM.	CATCH BASIN TYPE 2 48 IN. DIAM.	TESTING STORM SEWER PIPE	PLAIN CONC. STORM SEWER PIPE 8 IN. DIAM.	PLAIN CONC. STORM SEWER PIPE 12 IN. DIAM.	PLAIN CONC. STORM SEWER PIPE 18 IN. DIAM.	CL. IV REINF. CONC. STORM SEWER PIPE 12 IN. DIAM.	CL. IV REINF. CONC. STORM SEWER PIPE 18 IN. DIAM.		TR. 5 ST. STORM SEWER PIPE 0.064 IN. TH. 12 IN. DIAM.	TR. 5 ST. STORM SEWER PIPE 0.064 IN. TH. 18 IN. DIAM.	TR. 5 ST. STORM SEWER PIPE 0.064 IN. TH. 24 IN. DIAM.	TR. 5 ST. STORM SEWER PIPE 0.064 IN. TH. 30 IN. DIAM.	SPECIAL PLASTIC DRAINAGE MARKING	STRUCTURE EXCAVATION CLASS B, INCL. HAUL	SHORING OR EXTRA EXCAVATION CLASS B	GRAVEL BACKFILL FOR PIPE BEDDING	GRAVEL BACKFILL FOR DRAIN	CONNECTION TO DRAINAGE STRUCTURE	MANHOLE UNDER 12 FT. 48 IN. DIAM. TYPE 1	MANHOLE 12 FT. TO 20 FT. 72 IN. DIAM. TYPE 2	CATCH BASIN TYPE 2 WITH FLOW RESTRICTOR/ OIL SEPARATOR	ADJUST CATCH BASIN	CLEANING EXISTING DRAINAGE STRUCTURE		ANCHOR ASSEMBLY-CORRUGATED METAL PIPE	DETENTION POND EXCAVATION, INCL. HAUL	SPECIAL BORROW INCL. HAUL	SEE GENERAL NOTE NO... SHEET DN1
		EACH		CY	EACH	CY	EACH	EACH	EACH	LF	LF	EACH	LF	LF	LF	LF	LF	LF		LF	LF	LF	LF	EACH	CY	SF	CY	CY	EACH	EACH	EACH	EACH	EACH	LS		EACH	CY	CY	
DR 10-36	LW 573+988.9(150'LT) TO SBC-D 77+70(66'LT)												20			20								1	16		1			1									16
DR 10-37	SBC-D 77+70(66'LT) TO SBC-D 75+95(95'LT)												170			170									94		16												12,16
DR 10-38	L 565+95(120'RT)				1	4							20	20										1	14	95	1												
DR 10-39	L 565+85(4.13'LT)									24																		2											
DR 10-40	L 565+83(2'RT) TO 576+29(3.21'LT)									1068																		108											
DR 11-1	L 579+50(2.54'RT) TO L 579+50(2.54'LT)				1										5									1	9	90	1												3,16
DR 11-2	L 579+50(2.54'LT) TO L 577+50(2.54'LT)				1								200		200									1	113	90	18												3,16
DR 11-3	L 589+65(2.54'RT) TO L 589+65(2.67'LT)				1										6									1	8	75	1												3,16
DR 11-4	L 589+65(2.67'LT) TO 589+65(110'LT)											1												2	23									LS					3
DR 11-5	L 589+65(2.67'RT) TO 589+65(84'RT)																							1										LS					3
DR 12-1	L 601+00(2.54'RT) TO L 601+00(98'RT)	1			1																			2	10	120								LS					3
DR 12-2	L 601+00(78'LT) TO L 601+00(2.54'RT)	1			1																			2	9	105								LS					3
DR 13-1	L 610+05(2.67'RT) TO L 610+05(98'RT)											1												2	9	105								LS					3
DR 13-2	L 610+05(2.67'RT) TO L 610+05(84'LT)	1																						2										LS					3,16
DR 13-3	L 617+50(2.54'RT) TO L 617+50(113'LT)	1			1										5									2	7	140	1							LS					3
DR 14-1	L 625+00(2.54'RT) TO L 628+50(2.54'RT)				1								150		150									1	84	68	13												3,16
DR 14-2	L 625+00(2.54'LT) TO L 625+00(2.54'RT)				1										5									1	8	68	1												3,16
DR 14-3	L 628+50(2.54'RT) TO L 632+00(2.54'RT)				1																			1	9	1590								LS					3
DR 14-4	L 628+50(2.54'LT) TO L 628+50(2.54'RT)	1			1										5									1	12	90	1												3,16
DR 14-5	L 632+00(2.54'RT) TO L 632+00(2.54'LT)				1										5									1	12	155	1												3,16
DR 14-6	L 632+00(2.54'LT) TO L 632+00(100'LT)	1			1	4	1																	2	9	105								LS					3,6,8
DR 14-7	L 638+20(2.54'RT) TO L 638+20(2.54'LT)				1										5									1	10	140	1												3,16
DR 14-8	L 638+20(2.54'LT) TO L 638+20(77'LT)	1			1																			2	7	90													3
DR 14-9	L 638+20(77'LT) TO L 638+50(160'LT)																																1	LS					
DR 14-10	L 635+00(70'LT)																							1									1	LS					3
DR 14-11	L 632+36(115'LT) TO L 632+91(118'LT)				1	7		1					55								55				47	1045	6												16,17
DR 14-12	L 634+15(120'LT) TO L 633+97(100'LT)												27								27				41		3					1							13,16,17
DR 14-13	L 634+15(100'LT) TO L 636+03(160'LT)												201								201				210	90	21		1					LS		2			4,14,16,17
DR 14-14	L 633+00([illegible]35'LT)																									2880											1150	103	
DR 14-15	L [illegible]36+03(160'LT) TO L 635+78(235'LT)																																	LS					
DR 14-16	L 634+25(134'LT)					19																				75													
DR 14-17	L 626+50(2.54'RT) TO L 628+50(2.54'RT)				1								200		200									1	120		18												3,16
DR 14-18	L 630+00(2.54'RT)				1																			1	7	2090	1							LS					3
DR 15-1	L 644+50(3.3'RT) TO L 644+50(3.3'LT)				1										5									1	14	90	1												3,16
DR 15-2	L 644+50(3.3'LT) TO L 645+00(2.54'LT)				1								50		50									1	40	225	4												3,16
DR 15-3	L 645+00(2.54'RT) TO L 645+00(2.54'LT)	1			1										5									1	15		1												3,16
DR 15-4	L 645+00(2.54'LT) TO L 645+00(147'LT)				1																			2	9	105								LS					3
DR 15-5	L 645+50(2.54'RT) TO L 645+50(2.54'LT)				1										5									1	12	2090	1												3,16
DR 15-6	L 645+50(2.54'LT) TO L 645+00(2.54'LT)				1								50		50									1	40	590	5												3,16
DR 15-7	L 648+00(2.54'RT) TO L 645+50(2.54'RT)				1								250		250									1	137	75	23												3,16
DR 15-8	L 652+00(1.67'RT) TO L 652+00(102'LT)	1			1																			2	10	105								LS					3
DR 15-9	L 641+00(82'LT)																							1									1	LS					3
DR 15-10	L 643+48(87'LT)																							1									1	LS					3
DR 15-11	116-S 5+83(45'LT TO 116-S 6+55(45'LT)																																1	LS					
DR 15-12	116-S 6+55(45'LT TO 116-S 9+40(46'LT)																																1	LS					
DR 15-13	L 643+36(115'RT) TO L 643+08(152'LT)																							2										LS					3
DR 16-1	116-S 9+50(35'LT) TO 116-S 9+40(46'LT)	1			1										10									1	14	105	1							LS					3,8,11,16
DR 16-2	L 662+50(0.54'RT) TO L 663+57(2.5'RT)	1			1	1							107		107										51	75	10												3,16
DR 16-3	L 657+30(0.54'RT) TO L 656+43(140'RT)	1			1																			1	6	90								LS					3
DR 16-4	116-S 10+10(35'RT)																							1									1	LS					3
DR 16-5	116-S 9+40(46'LT)																							1										LS					3
DR 16-6	L 655+30(2.17'RT) TO L 652+00(1.67'RT)				1								230		230									1	130	2090	22												3,16
DR 16-7	LE 655+20(32'LT) TO LE 664+90(38'LT)				1	4							30		30									1	12	82	1												3,16
DR 16-8	L 653+20(1'LT) TO L 655+50(2.17'RT)													240														18											
DR 16-9	LW 657+00(30'RT) TO L 662+59(34'RT)													564														47											
DR 17-1	L 671+00(15.54'LT) TO L 671+00(0.46'LT)				1								15				15							1	12	285	1												3
DR 17-2	L 671+00(0.46'LT) TO L 672+55(0.46'LT)				1								155				155							1	76	750	14												3
DR 17-3	L 672+55(15.54'LT) TO L 672+55(0.46'LT)	1			1								15		15									1	21	225	1												3,21,22
DR 17-4	L 672+55(0.46'LT) TO L 672+92(110'RT)				1																			2	9	105								LS					3
DR 17-5	L 680+00(15.54'LT) TO L 680+00(0.46'LT)				1								15		15									1	15	225	1												3,21,22
	SHEET TOTAL	13			35	39	1	1				2	1960	1896	1378	190	170				283			57	1511	16613	191	175	1			1	7			2	1150	103	

ANNE C. SYMONDS
STATE OF WASHINGTON
18706
REGISTERED PROFESSIONAL ENGINEER
9/19/92
EXPIRES 3/22/93

DESIGNED	B.A./C.R.	5/92			
DRAWN	B.S.	5/92			
REVIEWED	M.M.	6/92			
PROJ. ENGR.	R. KINOSHITA				
DIST. ADM.	R. Q. ANDERSON				
		DATE	REVISION	BY	APP'D

REGION NO.	STATE	FED. AID PROJ. NO.	SHEET NO.	TOTAL SHEETS
10	WASH	I-IM-405-3(791)		

JOB NUMBER 92W070
CONTRACT NO.

PROGRAM DEVELOPMENT DIVISION

APPROVED

Washington State Department of Transportation

HDR ENGINEERING INC.

ANNE SYMONDS & ASSOC., INC.
CONSULTING ENGINEERS

SR 405
NORTHRUP TO BOTHELL
HOV AND SC&DI - STAGE I

DRAINAGE STRUCTURE NOTES

DN5

SHEET 49 OF 474 SHEETS

* FOR ADDITIONAL DITCH EXCAVATION QUANTITIES, SEE SHEETS DN9 THROUGH DN14.

DRAINAGE STRUCTURE NOTES

NOTE:
THE FIRST NUMBER OF THE "CODE" REFERS TO THE PLAN SHEET NUMBER OF THE CONTRACT PLANS. THE SECOND NUMBER REFERS TO THE CONSTRUCTION FEATURE FOUND ON THE PARTICULAR SHEET.

CODE	STATION	REMOVING CATCH BASIN		DITCH EXCAVATION *	GRATE INLET TYPE 1 OR 2	HAND PLACED RIPRAP	FLARED END SECTION 12 IN. DIAM.	FLARED END SECTION 18 IN. DIAM.	FLARED END SECTION 24 IN. DIAM.	UNDERDRAIN PIPE 8 IN. DIAM.	SCHEDULE A CULV. PIPE 12 IN. DIAM.	CATCH BASIN TYPE 2 48 IN. DIAM.	TESTING STORM SEWER PIPE	PLAIN CONC. STORM SEWER PIPE 8 IN. DIAM.	PLAIN CONC. STORM SEWER PIPE 12 IN. DIAM.	PLAIN CONC. STORM SEWER PIPE 18 IN. DIAM.	CL. IV REINF. CONC. STORM SEWER PIPE 12 IN. DIAM.	CL. IV REINF. CONC. STORM SEWER PIPE 18 IN. DIAM.	
		EACH		CY	EACH	CY	EACH	EACH	EACH	LF	LF	EACH	LF	LF	LF	LF	LF	LF	
DR 17-6	L 680+00(0.46'LT) TO W-N 20+45(25'RT)	1			1														
DR 17-7	L 678+14(8'LT)	1																	
DR 18-1	L 682+50(8'LT)	1																	
DR 18-2	S-124 4+74(70'RT)																		
DR 18-3	L 685+50(15.54'LT) TO L 685+50(0.46'LT)				1								15		15				
DR 18-4	L 685+50(0.46'LT) TO L 686+50(0.46'LT)				1								100		100				
DR 18-5	L 686+50(15.54'LT) TO L 686+50(0.46'LT)				1								15		15				
DR 18-6	L 686+50(0.46'LT) TO L 687+50(0.46'LT)				1								100		100				
DR 18-7	L 687+50(15.54'LT) TO L 687+50(0.46'LT)				1								15		15				
DR 18-8	L 687+50(0.46'LT) TO L 688+00(0.46'LT)				1								50		50				
DR 18-9	L 688+00(15.54'LT) TO L 688+00(0.46'LT)	1			1								15		15				
DR 18-10	L 688+00(0.46'LT) TO L 689+20(1.0'LT)				1								120		120				
DR 18-11	L 689+20(1.0'LT)																		
DR 18-12	L 690+00(0.46'LT) TO L 689+20(1.0'LT)				1								75		75				
DR 18-13	L 690+00(15.54'LT) TO L 690+00(0.46'LT)				1								15		15				
DR 18-14	S-124 5+00(20'LT)																		
DR 18-15	S-124 7+49(16'LT)																		
DR 18-16	L 688+36(150'RT) TO L 690+50(250'LT)																		
DR 18-17	L 688+26(150'RT) TO L 690+40(250'LT)																		
DR 18-18	L 692+50(212'LT) TO L 692+63(192'LT)												25						
DR 21-1	L 694+97(0.46'LT) TO L 698+50(0.96'LT)				1								203		203				
DR 21-2	L 694+97(15.6'LT) TO L 694+97(0.46'LT)				1								15		15				
DR 21-3	L 698+50(0.96'LT) TO L 702+00(4.46'LT)				1								150		150				
DR 21-4	L 698+50(15.6'LT) TO L 698+50(0.96'LT)				1								15		15				
DR 21-5	L 698+51(7'LT)	1																	
DR 21-6	L 702+00(4.46'LT)				1														
DR 21-7	L 702+00(15.25'LT) TO L 702+00(4.46'LT)				1								11		11				
DR 21-8	L 702+00(7'LT)	1																	
DR 21-9	L 707+00(8.4'LT) TO L 707+00(102'RT)				1														
DR 21-10	L 707+00(14.6'LT) TO L 707+00(8.4'LT)				1										6				
DR 21-11	L 694+75(134'LT) TO L 694+25(164'LT)				1								62						
DR 21-12	L 692+50(212'LT) TO L 693+55(229'LT)					7		1					108						
DR 21-13	L 694+25(164'LT)					7		1											
DR 21-14	L 693+51(180'LT)																		
DR 21-16	L 694+97(15.6'LT) TO L 694+74(125'LT)	1																	
DR 21-17	L 694+97(7'LT)																		
DR 21-18	L 639+18(200'LT)					9													
DR 21-19	L 697+00(0.46'LT)												150		150				
DR 21-20	L 700+00(2.46'LT)												200		200				
DR 21-21	L 707+00(14.6'LT) TO L 708+00(10.97'LT)									100									
DR 22-1	LW 714+00(32.5'RT) TO LW 713+47(39'RT)				1								53		53				
DR 22-2	LW 713+47(31'RT)																		
DR 22-3	LW 716+05(40'RT) TO LW 716+05(34'LT)				1														
DR 22-4	LW 716+05(25'RT)	1																	
DR 22-5	LW 714+25(64'LT) TO LW 713+70(76'LT)				1								55		55				
DR 22-6	LW 708+50(58'LT)																		
DR 22-7	LW 710+00(58'LT)																		
DR 22-8	L 709+88(76'RT)																		
DR 22-9	LE 711+20(44'RT)																		
DR 22-10	LE 713+20(20'RT)																		
DR 22-11	LW 716+05(150'RT) TO LW 716+05(40'RT)																		
DR 22-12	LW 716+05(34'LT) TO LW 716+05(90'LT)																		
DR 22-13	LE 716+90(40'RT) TO LE 719+28(32'RT)																		
DR 22-14	LE 719+28(32'RT) TO LE 722+28(32'RT)																		
DR 22-15	LE 722+28(32'RT) TO LE 725+42(32'RT)																		
DR 22-16	LW 713+70(76'LT) TO LW 713+71(180'LT)											1	44		12				
DR 22-17	LW 713+70(63.8'LT)	1																	
	SHEET TOTAL	9			23	23		2		100		1	1611		1392				

CODE	TR. 5 ST. STORM SEWER PIPE 0.064 IN. TH. 12 IN. DIAM.	TR. 5 ST. STORM SEWER PIPE 0.064 IN. TH. 18 IN. DIAM.	TR. 5 ST. STORM SEWER PIPE 0.064 IN. TH. 24 IN. DIAM.	TR. 5 ST. STORM SEWER PIPE 0.064 IN. TH. 30 IN. DIAM.	SPECIAL PLASTIC DRAINAGE MARKING	STRUCTURE EXCAVATION CLASS B, INCL. HAUL	SHORING OR EXTRA EXCAVATION CLASS B	GRAVEL BACKFILL FOR PIPE BEDDING	GRAVEL BACKFILL FOR DRAIN	CONNECTION TO DRAINAGE STRUCTURE	MANHOLE UNDER 12 FT. 48 IN. DIAM. TYPE 1	MANHOLE 12 FT. TO 20 FT. 72 IN. DIAM. TYPE 2	CATCH BASIN TYPE 2 WITH FLOW RESTRICTOR/ OIL SEPARATOR	ADJUST CATCH BASIN	CLEANING EXISTING DRAINAGE STRUCTURE		ANCHOR ASSEMBLY-CORRUGATED METAL PIPE	DETENTION POND EXCAVATION, INCL. HAUL	SPECIAL BORROW INCL. HAUL	SEE GENERAL NOTE NO... SHEET DN1
	LF	LF	LF	LF	EACH	CY	SF	CY	CY	EACH	EACH	EACH	EACH	EACH	LS		EACH	CY	CY	
DR 17-6					2	8	90								LS					3
DR 17-7						5														10
DR 18-1						6														
DR 18-2															LS					
DR 18-3					1	15	75	1												3,16
DR 18-4					1	47	75	9												3,16
DR 18-5					1	14	75	1												3,16
DR 18-6					1	59	975	9												3,16
DR 18-7					1	14	75	1												3,16
DR 18-8					1	41	705	5												3,16
DR 18-9					1	15	90	1												3,16
DR 18-10					1	166	2295	11												3,16
DR 18-11					1	51	374					1								
DR 18-12					1	90	1805	7												3,16
DR 18-13					1	15	75	1												3,16
DR 18-14					1									1	LS					3
DR 18-15					1									1	LS					3
DR 18-16					2										LS					3
DR 18-17					2										LS					3
DR 18-18		25				25	270	2					1							
																				13,16,17
DR 21-1					1	150	2550	21												3,16
DR 21-2					1	23	330	1												3,16
DR 21-3					1	140	780	21												3,16
DR 21-4					1	18	240	1												3,16
DR 21-5						5														
DR 21-6					1	9	82													3
DR 21-7					1	13	90	1												3,16
DR 21-8						5														
DR 21-9					2	12	135								LS					3,8,11
DR 21-10					1	10	170	1												3,16
DR 21-11		62				57	815	7												17,16
DR 21-12		108				57	500	12												17,16
DR 21-13																				
DR 21-14																		1800	168	
DR 21-16					1										LS					3
DR 21-17						5														
DR 21-18																				3
DR 21-19						109		10												3,16
DR 21-20						89		10												3,16
DR 21-21									10											
DR 22-1					1	55	75	5												3,16
DR 22-2						6								1						
DR 22-3		10			2	12	82	1							LS					16,17
DR 22-4						5														
DR 22-5					2	52	350	7							LS					3,16
DR 22-6					1									1	LS					3
DR 22-7					1									1	LS					3
DR 22-8					1									1	LS					3
DR 22-9					1									1	LS					3
DR 22-10					1										LS					3
DR 22-11					1										LS					3
DR 22-12					2									1	LS					3
DR 22-13					1										LS					3
DR 22-14					1										LS					3
DR 22-15					1										LS					3
DR 22-16	32				1	42	95	5		2							1			3,16
DR 22-17					1															
SHEET TOTAL	32	205			47	1445	13273	151	10	2		1	1	8			1	1800	168	

ANNE C. SYMONDS
STATE OF WASHINGTON
18706
REGISTERED PROFESSIONAL ENGINEER
9/19/92
EXPIRES 3/22/93

DESIGNED	B.A./C.R.	5/92			
DRAWN	B.S.	5/92			
REVIEWED	M.M.	6/92			
PROJ. ENGR.	R. KINOSHITA				
DIST. ADM.	R. Q. ANDERSON				
		DATE	REVISION	BY	APP'D

REGION NO.	STATE	FED. AID PROJ. NO.	SHEET NO.	TOTAL SHEETS
10	WASH	I-IM-405-3(791)		

JOB NUMBER 92W070

CONTRACT NO.

PROGRAM DEVELOPMENT DIVISION

APPROVED

Washington State Department of Transportation

HDR ENGINEERING INC.

ANNE SYMONDS & ASSOC., INC. CONSULTING ENGINEERS

SR 405
NORTHRUP TO BOTHELL
HOV AND SC&DI - STAGE I

DRAINAGE STRUCTURE NOTES

DN6

SHEET 50 OF 474 SHEETS

12:07PM 1"=1' 9/19/92 ..oZDN6.DWG

* FOR ADDITIONAL DITCH EXCAVATION QUANTITIES, SEE SHEETS DN9 THROUGH DN14.

DRAINAGE STRUCTURE NOTES

NOTE:
THE FIRST NUMBER OF THE "CODE" REFERS TO THE PLAN SHEET NUMBER OF THE CONTRACT PLANS. THE SECOND NUMBER REFERS TO THE CONSTRUCTION FEATURE FOUND ON THE PARTICULAR SHEET.

CODE	STATION	REMOVING CATCH BASIN		DITCH EXCAVATION *	GRATE INLET TYPE 1 OR 2	HAND PLACED RIPRAP	FLARED END SECTION 12 IN. DIAM.	FLARED END SECTION 18 IN. DIAM.	FLARED END SECTION 24 IN. DIAM.	UNDERDRAIN PIPE 8 IN. DIAM.	SCHEDULE A CULV. PIPE 12 IN. DIAM.	CATCH BASIN TYPE 2 48 IN. DIAM.	TESTING STORM SEWER PIPE	PLAIN CONC. STORM SEWER PIPE 8 IN. DIAM.	PLAIN CONC. STORM SEWER PIPE 12 IN. DIAM.	PLAIN CONC. STORM SEWER PIPE 18 IN. DIAM.	CL. IV REINF. CONC. STORM SEWER PIPE 12 IN. DIAM.	CL. IV REINF. CONC. STORM SEWER PIPE 18 IN. DIAM.		TR. 5 ST. STORM SEWER PIPE 0.064 IN. TH. 12 IN. DIAM.	TR. 5 ST. STORM SEWER PIPE 0.064 IN. TH. 18 IN. DIAM.	TR. 5 ST. STORM SEWER PIPE 0.064 IN. TH. 24 IN. DIAM.	TR. 5 ST. STORM SEWER PIPE 0.064 IN. TH. 30 IN. DIAM.	SPECIAL PLASTIC DRAINAGE MARKING	STRUCTURE EXCAVATION CLASS B, INCL. HAUL	SHORING OR EXTRA EXCAVATION CLASS B	GRAVEL BACKFILL FOR PIPE BEDDING	GRAVEL BACKFILL FOR DRAIN	CONNECTION TO DRAINAGE STRUCTURE	MANHOLE UNDER 12 FT. 48 IN. DIAM. TYPE 1	MANHOLE 12 FT. TO 20 FT. 72 IN. DIAM. TYPE 2	CATCH BASIN TYPE 2 WITH FLOW RESTRICTOR/ OIL SEPARATOR	ADJUST CATCH BASIN	CLEANING EXISTING DRAINAGE STRUCTURE		ANCHOR ASSEMBLY-CURROGATED METAL PIPE	DETENTION POND EXCAVATION INCL. HAUL	SPECIAL BORROW INCL. HAUL	SEE GENERAL NOTE NO...
		EACH		CY	EACH	CY	EACH	EACH	EACH	LF	LF	EACH	LF	LF	LF	LF	LF	LF		LF	LF	LF	LF	EACH	CY	SF	CY	CY	EACH	EACH	EACH	EACH	EACH	LS		EACH	CY	CY	
DR 22-18	LE 711+00(45'RT) TO LE 711+00(60'RT)				1								25		25									1	14	82	3												16,17
DR 22-19	LW 711+45(31'RT) TO LW 712+00(31'RT)									35																		3											
DR 22-20	LW 711+45(31'RT)									35																		3											
DR 22-21	L 708+00(10.94'LT) TO LE 711+53(43'LT)									354																		30											
DR 23-1	LE 725+42(32'RT) TO LE 728+63(32'RT)																							1										LS					3
DR 23-2	LE 728+63(32'RT) TO LE 730+68(30'RT)																							1										LS					3
DR 23-3	LW 730+00(30'RT)	1																							5														
DR 23-4	LW 730+00(52'RT) TO LW 730+00(30'RT)								1				22									22		2	10		3							LS					3,8,16-18
DR 23-5	LE 730+ 68(30'RT) TO LE 730+73(52'LT)																							2										LS					3
DR 23-6	LW 730+00(110'LT)																																				1165		
DR 23-7	LW 729+95(62'LT) TO LW 729+95(100'LT)					7							38									38			29	410	5			1									8,11,16-18
DR 23-8	LW 730+76(90'LT) TO LW 731+32(200'LT)					4			1				124									124			70	298	8					1							12,13,16-18
DR 23-9	LE 730+80(32'RT) TO LE 730+92(68'LT)																							2										LS					3
DR 23-10	LE 731+90(40'RT) TO LE 732+66(84'LT)																							2										LS					3
DR 23-11	LW 731+82(44'RT) TO LW 732+45(50'LT)																							2										LS					3,16-18
DR 23-12	LW 730+60(115'LT) TO LW 730+76(90'LT)												29									29			12		4												
DR 23-13	LW 730+40(110'LT)					6																																	
DR 24-1	LW 739+83(52'RT) TO LW 739+80(29.5'RT)											1	23										23		21	300	3												3,8,11,16-18
DR 24-2	LW 746+55(54'RT) TO LW 746+25(54'RT)						2				30		30												30		3												9,16
DR 24-3	LW 747+18(53'RT) TO LW 746+75(104'LT)																							2									1	LS					3
DR 24-4	LE 745+90(36'RT) TO LW 747+18(53'RT)																							2										LS					3
DR 24-5	LW 747+50(57'RT) TO LW 747+18(53'RT)																																1	LS					
DR 24-6	LW 739+80(29.5'RT) TO LW 740+13(104'LT)	1										1												2	7	120								LS					3
DR 24-7	LE 739+24(40'RT) TO LW 739+83(52'RT)																							2										LS					3
DR 24-8	LE 739+93(51'RT) TO LE 739+24(40'RT)																																	LS					
DR 24-9	LE 746+20(34'RT) TO LE 746+82(34'RT)																																	LS					
DR 25-1	LE 753+10(51'LT) TO LW 754+15(99'LT)																							2									1	LS					3
DR 25-2	LE 753+10(43'RT) TO LE 753+10(51'LT)																							2										LS					3
DR 25-3	L 760+61(2.54'RT) TO L 760+61(81'LT)				1										3									2	8	116								LS					3,16
DR 25-4	L 760+61(81'LT) TO L 761+68(83'LT)																																	LS					
DR 25-5	L 761+68(83'LT) TO L 762+70(120'LT)																																	LS					
DR 25-6	L 760+61	1																							5														
DR 25-7	L 766+00(2.54'RT) TO L 766+00(2.54'LT)				1										5									1	10	75	1												3,16
DR 25-8	L 766+00(2.5'LT) TO L 765+51(165'LT)				1																			2	7	68								LS					3
DR 25-9	L 766+00	1																																					
DR 25-10	L 765+00(68'LT)																							1									1	LS					3
DR 25-11	L 766+48(134'RT) TO L 765+66(164'LT)																							1										LS					3
DR 25-12	L 766+72(136'LT) TO L 765+78(164'LT)																							1										LS					3
DR 26-1	L 770+00(2.54'RT) TO L 771+07(2.54'RT)				1								105		105									1	54	500	9												3,16
DR 26-2	L 771+07(2.54'RT) TO L 771+50(2.54'RT)	1			1								43		43									1	29	260	4												3,16
DR 26-3	L 771+07(2.54'LT) TO L 771+07(2.54'RT)				1										5									1	11	90	1												3,16
DR 26-4	L 771+50(2.54'RT) TO L 772+00(2.54'RT)				1								50		50									1	30	90	5												3,16
DR 26-5	L 771+50(2.54'LT) TO L 771+50(2.54'RT)				1										5									1	10	75	1												3,16
DR 26-6	L 772+00(2.54'RT)				1																			1	10	90													3,16
DR 26-7	L 772+00(2.54'LT) TO L 772+00(2.54'RT)														5									1	9	75	1												3,16,17
DR 26-8	L 773+00(95'RT) TO L 773+50(98'RT)				1	7		1					50					50							34	75	5												16,17
DR 26-9	L 774+20(98'RT) TO L 774+38(78'RT)												22					22							14	110	3												16,17
DR 26-10	L 774+38(78'RT) TO L 775+76(135'RT)												157					157							150	1590	17					1							13,16,17
DR 26-11	L 774+00(90'RT)					6																															1360	19	
DR 26-12	L 775+00(2.54'RT) TO L 775+00(2.54'LT)				1										5									1	10	140	1												3,16
DR 26-13	L 775+00(2.54'LT) TO L 774+94(147'LT)	1			1																			2	7	90								LS					3
DR 26-14	L 778+50(2.54'RT) TO L 778+50(2.54'LT)				1										5									1	15	90	1												3,16
DR 26-15	L 778+50(2.54'LT) TO L 778+50(124'LT)	1			1																			2	8	90								LS					3
DR 26-16	L 771+00(66'LT) TO L 771+00(105'LT)																							1									1	LS					3
DR 26-17	L 768+00(66'LT)																							1									1	LS					3
DR 26-18	L 774+00(66'LT)																							1									1	LS					3
DR 26-19	L 777+00(66'LT)																							1									1	LS					3
	SHEET TOTAL	7			15	30	2	1	2	424	30	2	718		256			229				213	23	50	605	4834	78	36		1		2	8				2525	19	

ANNE C. SYMONDS, STATE OF WASHINGTON, 18306, REGISTERED PROFESSIONAL ENGINEER
9/19/92
EXPIRES 3/22/93

DESIGNED	B.A./C.R.	5/92
DRAWN	B.S.	5/92
REVIEWED	M.M.	6/92
PROJ. ENGR.	R. KINOSHITA	
DIST. ADM.	R. Q. ANDERSON	

DATE	REVISION	BY	APP'D

REGION NO.	STATE	FED. AID PROJ. NO.	SHEET NO.	TOTAL SHEETS
10	WASH	I-IM-405-3(791)		

JOB NUMBER 92W070
CONTRACT NO.

PROGRAM DEVELOPMENT DIVISION

APPROVED

Washington State Department of Transportation

HDR ENGINEERING INC.

ANNE SYMONDS & ASSOC., INC. CONSULTING ENGINEERS

SR 405
NORTHRUP TO BOTHELL
HOV AND SC&DI - STAGE I

DRAINAGE STRUCTURE NOTES

DN7

SHEET 51 OF 474 SHEETS

* FOR ADDITIONAL DITCH EXCAVATION QUANTITIES, SEE SHEETS DN9 THROUGH DN14.

** FOR ADDITIONAL STRUCTURE EXCAVATION CLASS B INCL. HAUL QUANTITIES, SEE SHEET PQ8.

DRAINAGE STRUCTURE NOTES

NOTE:
THE FIRST NUMBER OF THE "CODE" REFERS TO THE PLAN SHEET NUMBER OF THE CONTRACT PLANS. THE SECOND NUMBER REFERS TO THE CONSTRUCTION FEATURE FOUND ON THE PARTICULAR SHEET.

CODE	STATION	REMOVING CATCH BASIN		DITCH EXCAVATION *	GRATE INLET TYPE 1 OR 2	HAND PLACED RIPRAP	FLARED END SECTION 12 IN. DIAM.	FLARED END SECTION 18 IN. DIAM.	FLARED END SECTION 24 IN. DIAM.	UNDERDRAIN PIPE 8 IN. DIAM.	SCHEDULE A CULV. PIPE 12 IN. DIAM.	CATCH BASIN TYPE 2 48 IN. DIAM.	TESTING STORM SEWER PIPE	PLAIN CONC. STORM SEWER PIPE 8 IN. DIAM.	PLAIN CONC. STORM SEWER PIPE 12 IN. DIAM.	PLAIN CONC. STORM SEWER PIPE 18 IN. DIAM.	CL. IV REINF. CONC. STORM SEWER PIPE 12 IN. DIAM.	CL. IV REINF. CONC. STORM SEWER PIPE 18 IN. DIAM.		TR. 5 ST. STORM SEWER PIPE 0.064 IN. TH. 12 IN. DIAM.	TR. 5 ST. STORM SEWER PIPE 0.064 IN. TH. 18 IN. DIAM.	TR. 5 ST. STORM SEWER PIPE 0.064 IN. TH. 24 IN. DIAM.	TR. 5 ST. STORM SEWER PIPE 0.064 IN. TH. 30 IN. DIAM.	SPECIAL PLASTIC DRAINAGE MARKING	STRUCTURE EXCAVATION ** CLASS B, INCL. HAUL	SHORING OR EXTRA EXCAVATION CLASS B	GRAVEL BACKFILL FOR PIPE BEDDING	GRAVEL BACKFILL FOR DRAIN	CONNECTION TO DRAINAGE STRUCTURE	MANHOLE UNDER 12 FT. 48 IN. DIAM. TYPE 1	MANHOLE 12 FT. TO 20 FT. 72 IN. DIAM. TYPE 2	CATCH BASIN TYPE 2 WITH FLOW RESTRICTOR/ OIL SEPARATOR	ADJUST CATCH BASIN	CLEANING EXISTING DRAINAGE STRUCTURE		ANCHOR ASSEMBLY-CORRUGATED METAL PIPE	DETENTION POND EXCAVATION, INCL. HAUL	SPECIAL BORROW INCL. HAUL	SEE GENERAL NOTE NO... SHEET DN1
		EACH		CY	EACH	CY	EACH	EACH	EACH	LF	LF	EACH	LF	LF	LF	LF	LF	LF		LF	LF	LF	LF	EACH	CY	SF	CY	CY	EACH	EACH	EACH	EACH	EACH	LS		EACH	CY	CY	
DR 26-20	L 780+00(68'LT)																							1									1	LS					3
DR 26-21	L 771+07(2.54'RT) TO L 771+00(78'RT)																							1										LS					3
DR 26-22	L 771+07(2.54'LT) TO L 772+50(108'LT)																							1										LS					3
DR 26-23	L 775+76(135'RT) TO L 775+05(145'LT)																							2					1					LS					3,14
DR 26-24	L 774+38(108'RT)					6																																	
DR 27-1	L 782+00(2.54'RT) TO L 782+00(2.54'LT)	1			1										5									1	10	147	1											3
DR 27-2	L 782+00(2.54'LT) TO L 782+00(123'LT)				1																			2	7	105								LS					3,16
DR 27-3	L 785+25(2.54'RT) TO L 785+25(117'LT)	1			1																			2	7	82								LS					3
DR 27-4	L 783+00(68'LT)																							1									1	LS					3
DR 27-5	L 790+00(2.54'RT) TO L 789+16(96'LT)	1			1																			1	6	75								LS					3
DR 27-6	L 793+50(1.0'RT) TO L 792+85(116'LT)																							2									1	LS					3
DR 27-7	L 789+16(96'LT) TO L 789+08(112'LT)												12		12									1	6		1												3,8,12,16
	SHEET TOTAL	3			4	6							12		17									15			2		1				3	LS					
																										409													
	TOTAL SHEET DN1	11			17	1						2	65		5	20	65							28	225	2063	11						4	LS					
	TOTAL SHEET DN2	14		91	16	66	1			266	55	5	1776	153	1210	15	194			185	185	5		50	1201	8679	171	22	1				14	LS					
	TOTAL SHEET DN3	6			14	35	3	3				2	1940		1061		463			90	349			49	1267	7663	189					2	17	LS		1	4430	115	
	TOTAL SHEET DN4	13			10	8				486		1	711		356		366			43				50	519	848	67	39	1	1			20	LS					
	TOTAL SHEET DN5	13			35	39	1	1		1896		2	1960		1378	190	170				283			57	1511	16618	191	175	1			1	7	LS		2	1150	103	
	TOTAL SHEET DN6	9			23	23		2		100		1	1611		1392					32	205			47	1445	13273	151	10	2		1	1	7	LS		1	1800	168	
	TOTAL SHEET DN7	7			15	30	2	1	2	424	30	2	718		256			229				213	23	50	605	4834	78	36		1		2	8	LS			2525	19	
	PROJECT TOTAL	76		91	134	208	7	7	2	3172	85	15	8793	153	5675	225	1258	229		350	1022	218	23	346	6773	54387	860	282	6	2	1	6	80	LS		4	9905	405	

ANNE C. SYMONDS
STATE OF WASHINGTON
REGISTERED PROFESSIONAL ENGINEER
9/9/92
EXPIRES 3/22/93

DESIGNED	B.A./C.R.	5/92				REGION NO.	STATE	FED. AID PROJ. NO.	SHEET NO.	TOTAL SHEETS	
DRAWN	B.S.	5/92				10	WASH	I-IM-405-3(791)			
REVIEWED	M.M.	6/92				JOB NUMBER 92W070					
PROJ. ENGR.	R. KINOSHITA					CONTRACT NO.					
DIST. ADM.	R. Q. ANDERSON										
		DATE	REVISION	BY	APP'D						

PROGRAM DEVELOPMENT DIVISION

APPROVED

Washington State Department of Transportation

HDR ENGINEERING INC.

ANNE SYMONDS & ASSOC., INC.
CONSULTING ENGINEERS

SR 405
NORTHRUP TO BOTHELL
HOV AND SC&DI - STAGE I

DRAINAGE STRUCTURE NOTES

DN8

SHEET 52 OF 474 SHEETS

TEMPORARY WATER POLLUTION CONTROL STRUCTURE NOTES

NOTE:
THE FIRST NUMBER OF THE "CODE" REFERS TO THE PLAN SHEET NUMBER OF THE CONTRACT PLANS. THE SECOND NUMBER REFERS TO THE CONSTRUCTION FEATURE FOUND ON THE PARTICULAR SHEET.

CODE	STATION	DITCH EXCAVATION (CY)	QUARRY SPALLS (TON)	CONSTRUCTION GEOTEXTILE FOR SILT FENCE (LF)	GRAVEL AND WIRE MESH FILTER (EA)
DR1-A	L STA 451+00 (2.54 LT)				1
DR1-B	L STA 451+00 (2.54 RT)				1
DR1-C	L STA 451+95 TO 452+05 (106' RT)			10	
DR1-D	L STA 457+00 (2.54 LT)				1
DR1-E	L STA 457+00 (2.54 RT)				1
DR1-F	L STA 457+28 (148'RT) TO 457+38 (138' RT)			10	
DR2-A	L STA 463+23 (74' LT)	10	30		
DR2-B	L STA 463+13 (2.25' LT)				1
DR2-C	L STA 463+13 (2.54' RT)				1
DR2-D	L STA 463+08 TO 463+18 (161' RT)			10	
DR2-E	L STA 466+50 (2.54' LT)				1
DR2-F	L STA 466+50 (2.54' RT)				1
DR2-G	L STA 466+40 TO 466+50 (178' RT)			10	
DR2-H	L STA 468+80 (76' LT)	10	30		
DR2-I	L STA 470+60 (76' LT)	10	30		
DR2-J	L STA 470+50 (2.54' LT)				1
DR2-K	L STA 470+50 (2.54' RT)				1
DR2-L	L STA 470+45 TO 470+55 (102' RT)			10	
DR2-M	L STA 471+00 TO 474+00 (100' LT)			300	
DR3-A	L STA 474+00 (100' RT) TO 478+00 (125' RT)			425	
DR3-B	L STA 479+30 TO 479+70 (115'LT)			40	
DR3-C	L STA 478+46 (2.54' LT)				1
DR3-D	L STA 478+46 (2.54' RT)				1
DR3-E	L STA 478+56 (96' LT)	10	30		
DR3-F	L STA 483+05 (2.54' LT)				1
DR3-G	L STA 483+05 (2.54' RT)				1
DR3-H	L STA 482+68 (105' RT)	10	30		
DR3-I	L STA 483+95 (89' RT)	10	30		
DR3-J	L STA 484+55 (87' LT)	10	30		
DR3-K	L STA 484+80 TO 485+20 (125' LT)			40	
DR4-A	L STA 490+77 (2.54' LT)				1
DR4-B	L STA 490+77 (2.54' RT)				1
DR4-C	L STA 490+45 (125' LT) TO 504+00 (120' LT)			1360	
	SHEET TOTAL	70	210	2215	16

BRIAN N. BIERWAGEN, STATE OF WASHINGTON, REGISTERED PROFESSIONAL ENGINEER
8/14/92
EXPIRES 9/29/93

DESIGNED B.N.B.				REGION NO. 10	STATE WASH	FED. AID PROJ. NO. I-IM-405-3(791)	SHEET NO.	TOTAL SHEETS	PROGRAM DEVELOPMENT DIVISION
DRAWN L.L.W.									
REVIEWED				JOB NUMBER 92W070					
PROJ. ENGR. R. KINOSHITA				CONTRACT NO.					
DIST. ADM. R. Q. ANDERSON									
	DATE	DATE	REVISION	BY					

Washington State Department of Transportation

HDR ENGINEERING INC.

SR 405
NORTHUP TO BOTHELL
HOV AND SC&DI - STAGE I

DRAINAGE STRUCTURE NOTES

DN9

SHEET 53 OF 474 SHEETS

5:07pm 07/02/92 1=1 ...DRN\DN405N09 OLD889
NORTHUP TO BOTHELL HOV LANES - STAGE 1 MP 16.06 TO MP 22.50

TEMPORARY WATER POLLUTION CONTROL STRUCTURE NOTES

NOTE:
THE FIRST NUMBER OF THE "CODE" REFERS TO THE PLAN SHEET NUMBER OF THE CONTRACT PLANS. THE SECOND NUMBER REFERS TO THE CONSTRUCTION FEATURE FOUND ON THE PARTICULAR SHEET.

CODE	STATION	DITCH EXCAVATION	QUARRY SPALLS	CONSTRUCTION GEOTEXTILE FOR SILT FENCE	GRAVEL AND WIRE MESH FILTER
		CY	TON	LF	EA
DR5-A	L STA 508+50 (2.54' LT)				1
DR5-B	L STA 508+50 (2.54' RT)				1
DR5-C	L STA 508+40 (88'RT)	10	30		
DR5-D	L STA 508+50 (88' RT)				1
DR5-E	L STA 504+00 (125' LT) TO 519+00 (175' LT)			1500	
DR5-F	L STA 516+50 (138' RT)	10	30		
DR5-G	L STA 518+22 (4.04' LT)				1
DR5-H	L STA 518+22 (4.04' RT)				1
DR5-I	L STA 518+12 (155' RT)	10	30		
DR6-A	L STA 524+08 (370' LT)	10	30		
DR6-B	L STA 522+94 (4.04' LT)				1
DR6-C	L STA 524+78 (4.04' LT)				1
DR6-D	116 A-N STA 3+35 (35' RT)			15	
DR6-E	116 A-N STA 4+00 (68' RT)			15	
DR6-F	L STA 526+62 (2.25' LT)				1
DR6-G	116 A-N STA 6+22 (43' RT)			15	
DR6-H	116 A-N STA 6+68 (43' RT)			15	
DR6-I	L STA 528+88 (0.5' RT)			15	
DR6-J	L STA 530+84 (5' RT)	10	30		
DR6-K	L STA 530+94 (5' RT)				1
DR6-L	116 A-N STA 10+85 (25' RT)			15	
DR6-M	L STA 532+90 (18.5' RT)	10	30		
DR6-N	L STA 533+00 (18.5' RT)				1
DR6-O	L STA 529+30 (200' LT) TO 534+00 (140' LT)			470	
DR7-A	L STA 534+00 (140' LT) TO 535+10 (165' LT)			120	
DR7-B	L STA 534+65 (17' RT)			15	
DR7-C	L STA 534+93 (17' RT)			15	
DR7-D	L STA 534+97 (158' RT)			15	
DR7-E	LL STA 534+96 (198' RT)			50	
DR7-F	L STA 537+32 (14.5' RT)			15	
DR7-G	L STA 538+90 (17' RT)			15	
DR7-H	L STA 540+43 (14.5' RT)			15	
DR7-I	L STA 535+10 TO 540+00 (100' LT)			510	
DR7-J	L STA 541+85 TO 549+00 (100' LT)			710	
DR8-A	WN STA 3+00 (85' RT) TO 5+32.50 (55' RT)			280	
	SHEET TOTAL	60	180	3820	10

BRIAN N. BIERNACKI
STATE OF WASHINGTON
PROFESSIONAL ENGINEER
EXPIRES 9/29/93
8/4/92

DESIGNED	B.N.B.			
DRAWN	L.L.W.			
REVIEWED				
PROJ. ENGR.	R. KINOSHITA			
DIST. ADM.	R. Q. ANDERSON			
		DATE	DATE	REVISION

REGION NO.	STATE	FED. AID PROJ. NO.	SHEET NO.	TOTAL SHEETS
10	WASH	I-IM-405-3(791)		
JOB NUMBER 92W070				
CONTRACT NO.				

PROGRAM DEVELOPMENT DIVISION

Washington State Department of Transportation

HDR ENGINEERING INC.

SR 405
NORTHUP TO BOTHELL
HOV AND SC&DI - STAGE I

DRAINAGE STRUCTURE NOTES

DN10

SHEET 54 OF 474 SHEETS

5:03pm 1=1 07/02/92 P:\405N-DSNYDN405N10 OLD 889 RAC NORTHUP TO BOTHELL HOV LANES - STAGE 1 MP 16.06 TO MP 22.50

TEMPORARY WATER POLLUTION CONTROL
STRUCTURE NOTES

NOTE:
THE FIRST NUMBER OF THE "CODE" REFERS TO THE PLAN SHEET NUMBER OF THE CONTRACT PLANS. THE SECOND NUMBER REFERS TO THE CONSTRUCTION FEATURE FOUND ON THE PARTICULAR SHEET.

CODE	STATION	DITCH EXCAVATION	QUARRY SPALLS	CONSTRUCTION GEOTEXTILE FOR SILT FENCE	GRAVEL AND WIRE MESH FILTER
		CY	TON	LF	EA
DR9-A	E-S STA 9+60 (80' RT) TO STA 10+00 (95' RT)			60	
DR9-B	L STA 549+70 (15.5' RT)				1
DR9-C	L STA 549+60 (143' RT)	10	30		
DR9-D	L STA 549+70 (143' RT)			75	
DR9-E	L STA 552+00 (13.5' RT)				1
DR9-F	L STA 554+26 (2.25' RT)				1
DR9-G	L STA 556+58.40 (6' RT)				1
DR9-H	L STA 558+50 (2.5' RT)				1
DR9-I	L STA 560+50 (2.5' RT)				1
DR9-J	L STA 562+05 (2.25' RT)				1
DR9-K	L STA 563+57.60 (4.5' LT)				1
DR9-L	L STA 549+00 (100' LT) TO 563+85 (545' LT)			1545	
DR9-M	L STA 561+00 (340' LT)			50	
DR10-A	SW STA 2+90 (15' LT)			25	
DR10-B	SW STA 3+00 (30' LT)	10	30		
DR10-C	WN STA 5+32.50 (55' RT) TO 8+25 (65' RT)			270	
DR10-D	L STA 565+85 (4.5' LT)				1
DR10-E	L STA 567+70 (4.5' LT)				1
DR10-F	L STA 569+60 (2.25' LT)				1
DR10-G	L STA 571+55 (4.5' LT)				1
DR10-H	L STA 573+45 (4.5' LT)				1
DR10-I	L STA 574+50 (4.5' LT)				1
DR10-J	L STA 575+29 (2.25' LT)				1
DR10-K	L STA 576+29 (4.5' LT)				1
DR10-L	L STA 577+50 (2.5' LT)				1
DR11-A	L STA 579+50 (2.5' LT)				1
DR11-B	L STA 579+50 (2.5' RT)				1
DR11-C	L STA 589+65 (115' LT)			30	
DR11-D	L STA 589+65 (2.5' LT)				1
DR11-E	L STA 589+65 (2.5' RT)				1
DR11-F	L STA 584+30 TO 594+00 (125' RT)			970	
DR12-A	L STA 601+05 (78' LT)				1
DR12-B	L STA 601+00 (2.5' RT)				1
DR12-C	L STA 594+00 (120' RT) TO 601+50 (125' RT)			750	
	SHEET TOTAL	20	60	3775	23

BRIAN N. BIERBAUMER, STATE OF WASHINGTON, 26800, REGISTERED PROFESSIONAL ENGINEER
8/14/92
EXPIRES 9/29/93

DESIGNED	B.N.B.			
DRAWN	L.L.W.			
REVIEWED				
PROJ. ENGR.	R. KINOSHITA			
DIST. ADM.	R. Q. ANDERSON			
		DATE	DATE	REVISION

BY

REGION NO.	STATE	FED. AID PROJ. NO.	SHEET NO.	TOTAL SHEETS
10	WASH	I-IM-405-3(791)		
JOB NUMBER 92W070				
CONTRACT NO.				

PROGRAM DEVELOPMENT DIVISION

Washington State Department of Transportation

HDR ENGINEERING INC.

SR 405
NORTHUP TO BOTHELL
HOV AND SC&DI - STAGE I

DRAINAGE STRUCTURE NOTES

DN11

SHEET 55 OF 474 SHEETS

5:00pm 1=1 07/02/92 Jn-Dgn\DN405N11 OLD889

SR405 NORTHUP TO BOTHELL HOV LANES - STAGE 1 MP 16.06 TO MP 22.50

TEMPORARY WATER POLLUTION CONTROL
STRUCTURE NOTES

NOTE:
THE FIRST NUMBER OF THE "CODE" REFERS TO THE PLAN SHEET NUMBER OF THE CONTRACT PLANS. THE SECOND NUMBER REFERS TO THE CONSTRUCTION FEATURE FOUND ON THE PARTICULAR SHEET.

CODE	STATION	DITCH EXCAVATION (CY)	QUARRY SPALLS (TON)	CONSTRUCTION GEOTEXTILE FOR SILT FENCE (LF)	GRAVEL AND WIRE MESH FILTER (EA)
DR13-A	L STA 614+70 (90' LT)	10	30		
DR13-B	L STA 601+05 (2.5' RT)				1
DR13-C	L STA 609+00 TO 611+00 (125' RT)			200	
DR13-D	L 617+50 (2.25' RT)				1
DR13-E	L 617+90 TO 618+40 (250' LT)			50	
DR14-A	L STA 625+00 (2.25' LT)				1
DR14-B	L STA 625+00 (2.5' RT)				1
DR14-C	L STA 628+50 (6.5' RT)				1
DR14-D	L STA 628+50 (2.5' LT)				1
DR14-E	L STA 632+00 (2.5' LT)				1
DR14-F	L STA 632+00 (2.5' RT)				1
DR14-G	L STA 638+00 (2.5' LT)				1
DR14-H	L STA 638+20 (2.5' RT)				1
DR14-I	L STA 633+50 (215' LT) TO L STA. 636+00 (245' LT)			140	
DR14-J	L STA 634+10 (120' LT)			50	
DR14-K	L STA 638+50 (170' LT)			20	
DR15-A	L STA 644+50 (2.25' LT)				1
DR15-B	L STA 644+50 (4.0' RT)				1
DR15-C	L STA 645+00 (4.0' LT)				1
DR15-D	L STA 645+00 (4.0' RT)				1
DR15-E	L STA 645+50 (2.5' LT)				1
DR15-F	L STA 645+50 (2.5' RT)				1
DR15-G	116-S STA 4+50 (37' LT)	10	30		
DR15-H	L STA 648+00 (4.0' RT)				1
DR15-I	L STA 652+00 (4.0' RT)				1
DR16-A	116-S STA 11+00 (50' LT)	10	30		
DR16-B	116-S STA 11+30 (50' LT)			30	
DR16-C	L STA 657+00 (15' LT TO 15' RT)			30	
DR16-D	L STA 657+50 (2.25' RT)				1
DR16-E	L STA 662+49.10 (1.5' LT)				1
DR16-F	L STA 663+00 (15' LT TO 15' RT)			30	
DR17-A	L STA 671+00 (0.5' LT)				1
DR17-B	L STA 671+00 (15' LT)				1
DR17-C	L STA 672+51 (0.5' LT)				1
DR17-D	L STA 672+51.20 (18' LT)				1
DR17-E	L STA 672+92.50 (115' RT)			20	
	SHEET TOTAL	30	90	570	24

BRIAN N. BIERMASEN
STATE OF WASHINGTON
28800
REGISTERED PROFESSIONAL ENGINEER
Brian Biermasen 8/14/92
EXPIRES 9/29/93

DESIGNED B.N.B.					REGION NO.	STATE	FED. AID PROJ. NO.	SHEET NO.	TOTAL SHEETS
DRAWN L.L.W.					10	WASH	I-IM-405-3(791)		
REVIEWED					JOB NUMBER 92W070				
PROJ. ENGR. R. KINOSHITA					CONTRACT NO.				
DIST. ADM. R. Q. ANDERSON									
	DATE	DATE	REVISION	BY					

PROGRAM DEVELOPMENT DIVISION

Washington State Department of Transportation

HDR ENGINEERING INC.

SR 405
NORTHUP TO BOTHELL
HOV AND SC&DI - STAGE I

DRAINAGE STRUCTURE NOTES

DN12

SHEET 56 OF 474 SHEETS

4:58pm 1=1 07/02/92 NORTHUP TO BOTHELL HOV LANES - STAGE 1 MP 16.06 TO MP 22.50 OLD889

TEMPORARY WATER POLLUTION CONTROL STRUCTURE NOTES

NOTE:
THE FIRST NUMBER OF THE "CODE" REFERS TO THE PLAN SHEET NUMBER OF THE CONTRACT PLANS. THE SECOND NUMBER REFERS TO THE CONSTRUCTION FEATURE FOUND ON THE PARTICULAR SHEET.

CODE	STATION	DITCH EXCAVATION	QUARRY SPALLS	CONSTRCUTION GEOTEXTILE FOR SILT FENCE	GRAVEL AND WIRE MESH FILTER
		CY	TON	LF	EA
DR17-F	L STA 680+00 (15.5' LT)				1
DR17-G	L STA 680+00 (0.5' LT)				1
DR18-A	NOT USED				
DR18-B	NOT USED				
DR18-C	L STA 685+50 (0.5' LT)				1
DR18-D	L STA 685+50 (15.5' LT)				1
DR18-E	L STA 686+50 (15.5' LT)				1
DR18-F	L STA 686+50 (0.5' LT)				1
DR18-G	L STA 687+50 (15.5' LT)				1
DR18-H	L STA 687+50 (0.5' LT)				1
DR18-I	L STA 688+00 (0.5' LT)				1
DR18-J	L STA 688+00 (15.5' LT)				1
DR18-K	L STA 690+00 (15.5' LT)				1
DR18-L	L STA 690+00 (0.5' LT)				1
DR18-M	L STA 690+45 (260' LT)			40	
DR18-N	L STA 692+00 (250' LT) TO L STA 693+00 (240' LT)			100	
DR21-A	L STA 694+99.40 (6.75' LT)				1
DR21-B	L STA 698+50 (6.75' LT)				1
DR21-C	L STA 698+50 (2.25' LT)				1
DR21-D	L STA 702+00 (6.75' LT)				1
DR21-E	L STA 702+00 (2.25' LT)				1
DR21-F	L STA 707+00 (6.75' LT)				1
DR21-G	L STA 707+00 (2.25' LT)				1
DR21-H	L STA 707+00 (107' RT)			20	
DR21-I	L STA 694+99.40 (15' LT)				1
DR21-J	L STA 693+00 (240' LT) TO L STA 695+15 (95' LT)			310	
DR21-K	L STA 693+55 (175' LT)			50	
DR22-A	LE STA 715+00 (70' RT)			20	
DR22-B	LE STA 715+10 (70' RT)	10	30		
DR22-C	LW STA 716+05 (40' RT)				1
DR22-D	LW STA 722+50 (35' RT)	10	30		
DR22-E	LW STA 722+50 (65' LT)	10	30		
DR22-F	LW STA 714+00 (18' LT)				1
DR23-A	LW STA 729+90 (50' RT)	10	30		
DR23-B	LW STA 730+00 (52' RT)			15	
DR23-C	LW STA 730+10 (50' RT)	10	30		
DR23-D	LE STA 730+80 (35' RT)			20	
DR23-E	LE STA 730+90 (30' RT)	10	30		
DR23-F	LW STA 730+60 (110' LT)			20	
DR23-G	LW STA 728+30 (125' LT) TO 731+10 (115' LT)			380	
DR23-H	LW STA 734+80 (40' LT)	10	30		
DR23-I	LW STA 734+60 (35' LT) TO 738+00 (100' LT)			400	
	SHEET TOTAL	70	210	1375	22

BRIAN N. DIERWAGEN
STATE OF WASHINGTON
25500
REGISTERED PROFESSIONAL ENGINEER
8/14/92
EXPIRES 9/29/93

DESIGNED	B.N.B.			
DRAWN	L.L.W.			
REVIEWED				
PROJ. ENGR.	R. KINOSHITA			
DIST. ADM.	R. Q. ANDERSON			
		DATE	DATE	REVISION

REGION NO.	STATE	FED. AID PROJ. NO.	SHEET NO.	TOTAL SHEETS
10	WASH	I-IM-405-3(791)		
JOB NUMBER 92W070				
CONTRACT NO.				

PROGRAM DEVELOPMENT DIVISION

Washington State Department of Transportation

HDR ENGINEERING INC.

SR 405
NORTHUP TO BOTHELL
HOV AND SC&DI - STAGE I

DRAINAGE STRUCTURE NOTES

DN13

SHEET 57 OF 474 SHEETS

P:\405N-DRN\DN405N13 07/02/92 4:27pm 1=1

NORTHUP TO BOTHELL HOV LANES - STAGE 1 MP 16.06 TO MP 22.50 OLD 889

TEMPORARY WATER POLLUTION CONTROL
STRUCTURE NOTES

NOTE:
THE FIRST NUMBER OF THE "CODE" REFERS TO THE PLAN SHEET NUMBER OF THE CONTRACT PLANS. THE SECOND NUMBER REFERS TO THE CONSTRUCTION FEATURE FOUND ON THE PARTICULAR SHEET.

CODE	STATION	DITCH EXCAVATION * (CY)	QUARRY SPALLS (TON)	CONSTRUCTION GEOTEXTILE FOR SILT FENCE (LF)	GRAVEL AND WIRE MESH FILTER (EA)
DR24-A	LW STA 739+80 (50' RT)			15	
DR24-B	LW STA 740+00 (55' RT)	10	30		
DR24-C	LE STA 739+60 (75' RT)			50	
DR24-D	LE STA 741+65 (65' LT)	10	30		
DR24-E	LW STA 746+65 (53' RT)			15	
DR24-F	LW STA 746+80 (53' RT)	10	30		
DR24-G	LW STA 738+00 (100' LT) TO 753+00 (130' LT)			1505	
DR25-A	LW STA 754+00 (45' RT)	10	30		
DR25-B	LW STA 760+61 (2.58' RT)				1
DR25-C	LW STA 761+78 (83' LT)			20	
DR25-D	LW STA 766+00 (2.58' LT)				1
DR25-E	LW STA 766+00 (2.58' RT)				1
DR25-F	LW STA 754+25 (45' RT)				1
DR25-G	L STA 761+68 (83' LT)				1
DR26-A	L STA 770+00 (2.58' RT)				1
DR26-B	L STA 771+07.50 (2.58' LT)				1
DR26-C	L STA 771+07.50 (2.58' RT)				1
DR26-D	L STA 771+50 (2.58' LT)				1
DR26-E	L STA 771+50 (2.58' RT)				1
DR26-F	L STA 772+00 (2.58' LT)				1
DR26-G	L STA 772+00 (2.25' RT)				1
DR26-H	L STA 773+00 (95' RT)			15	
DR26-I	L STA 774+05 (100' RT)			30	
DR26-J	L STA 775+00 (2.58' RT)				1
DR26-K	L STA 775+76 (135' RT)			15	
DR26-L	L STA 775+85 (135' RT)	10	30		
DR26-M	L STA 778+50 (2.58' LT)				1
DR26-N	L STA 778+50 (2.58' RT)				1
DR26-O	L STA 772+00 (120' LT) TO 781+00 (150' LT)			900	
DR26-P	L STA 775+00 (2.58' LT)				1
DR27-A	L STA 782+00 (2.58' LT)				1
DR27-B	L STA 782+00 (2.58' RT)				1
DR27-C	L STA 785+25 (2.58' RT)				1
DR27-D	L STA 790+00 (2.58' RT)				1
DR27-E	L STA 793+50 (2.58' RT)				1
DR27-F	L 792+75 (110' LT)			20	
DR27-G	L 789+00 (120' LT)			20	
DR27-H	L 785+25 (122' LT)			20	
DR27-I	L 782+00 (128' LT)			20	
	TOTAL THIS SHEET	50	150	2645	20
	TOTAL SHEET DN9	70	210	2215	16
	DN10	60	180	3820	10
	DN11	20	60	3775	23
	DN12	30	90	570	24
	DN13	70	210	1375	22
	PROJECT TOTAL	*300	900	14,400	115

* FOR ADDITIONAL "DITCH EXCAVATION" QUANTITIES SEE SHEETS DN1 THROUGH DN7.

BRIAN N. BIERWAGEN, STATE OF WASHINGTON, 28841, REGISTERED PROFESSIONAL ENGINEER
3/14/92
EXPIRES 9/24/93

DESIGNED B.N.B.				REGION NO. 10	STATE WASH	FED. AID PROJ. NO. I-IM-405-3(791)	SHEET NO.	TOTAL SHEETS	PROGRAM DEVELOPMENT DIVISION
DRAWN L.L.W.									
REVIEWED				JOB NUMBER 92W070					
PROJ. ENGR. R. KINOSHITA									
DIST. ADM. R. Q. ANDERSON				CONTRACT NO.					
	DATE	DATE	REVISION	BY					

Washington State Department of Transportation

HDR ENGINEERING INC.

SR 405
NORTHUP TO BOTHELL
HOV AND SC&DI - STAGE I

DRAINAGE STRUCTURE NOTES

DN14

SHEET 58 OF 474 SHEETS

NORTHUP - BOTHELL
HOV LANES - STAGE 1
MP 16.06 TO MP 22.50 OLD889

08/11/92 4:10pm 1=1

T. 25N. R.5E. W.M.

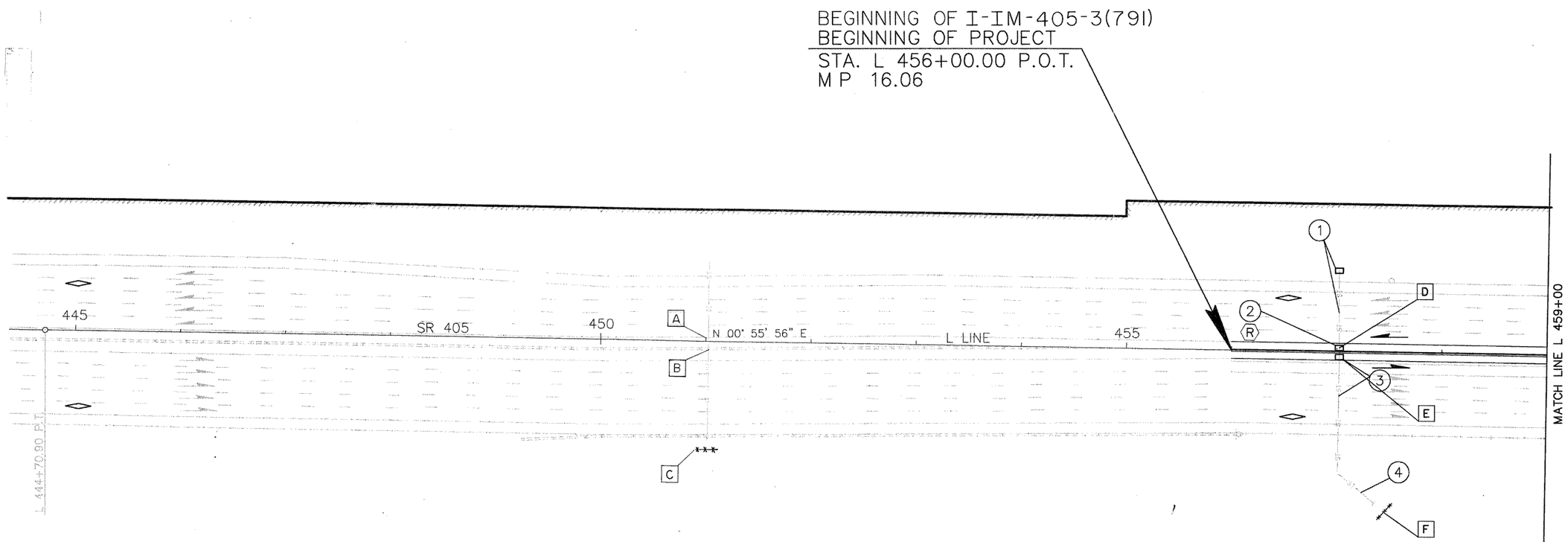

LEGEND:

TEMPORARY WATER POLLUTION CONTROL:

- TEMPORARY ROCK CHECK DAM; SEE DETAIL SHEET. DD4
- CONSTRUCTION GEOTEXTILE FOR SILT FENCE; SEE DETAIL SHEET. DD4

DRAINAGE:

- QUARRY SPALLS/ROCK LINED DITCH; SEE DETAIL SHEET. DD4
- ROCK CHECK DAM; SEE DETAIL SHEET. DD4
- DITCH LINE
- GRAVEL AND WIRE FILTER

NOTES:

(1) – DRAINAGE STRUCTURE NOTE CALLOUT FOR NOTES, SEE SHEETS DN1 THRU. DN8

[1] – TEMPORARY WATER POLLUTION CONTROL STRUCTURE NOTE CALLOUT FOR NOTES, SEE SHEETS DN9 & DN14

LEGEND:

- PROPOSED DITCH
- EXISTING DITCH
- ST — PROPOSED PIPE
- ST — EXISTING PIPE
- NEW C.B., TYPE 2
- CB TYPE 2, F.R.O.S.
- EXISTING C.B.
- NEW G.I.
- EXISTING G.I.
- NEW M.H.
- EXISTING M.H.
- RIPRAP
- OUTFALL

0 50 100
SCALE IN FEET

JOHN R. GENSKOW, STATE OF WASHINGTON, REGISTERED PROFESSIONAL ENGINEER — 5/8/92 — EXPIRES 3/21/94

ANNE C. SYMONDS, STATE OF WASHINGTON, 16708, REGISTERED PROFESSIONAL ENGINEER — 7/5/92 — EXPIRES 3/22/93

DESIGNED B.A./C.R.	5/92				REGION NO.	STATE	FED. AID PROJ. NO.	SHEET NO.	TOTAL SHEETS	PROGRAM DEVELOPMENT DIVISION
DRAWN M.S., M.T.F.	5/92				10	WASH	I-IM-405-3(791)			
REVIEWED A.C.S.	6/92				JOB NUMBER 92W070					
CHECKED										
PROJ. ENGR. R. KINOSHITA										
DIST. ADM. R.Q. ANDERSON					CONTRACT NO.					APPROVED
	DATE	REVISION	BY	APP'D						

Washington State Department of Transportation

HDR ENGINEERING INC.

ANNE SYMONDS & ASSOC., INC. CONSULTING ENGINEERS

SR 405
NORTHUP TO BOTHELL
HOV AND SC&DI - STAGE 1

DRAINAGE PLAN

DR1

SHEET 59 OF 474 SHEETS

SR405 NORTHUP TO BOTHELL HOV LANES - STAGE 1 MP 16.06 to MP22.50 06089

9:30AM 6/30/92 1"=50' 1405N-01.DWG

T. 25N. R.5E. W.M.

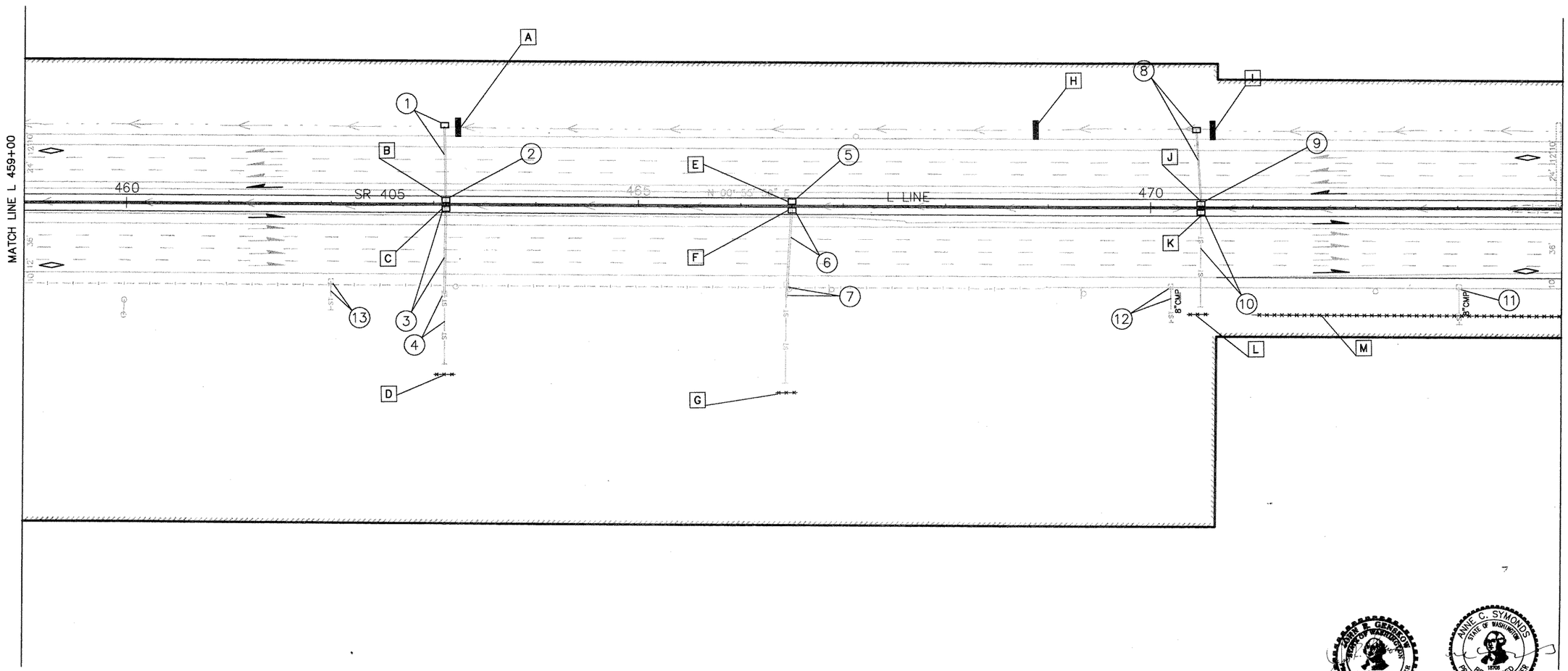

0 50 100
SCALE IN FEET

REFER TO SHEET DR1 FOR LEGEND

DESIGNED B.A./C.R.	5/92			
DRAWN M.T.F.	5/92			
REVIEWED A.C.S.	6/92			
PROJ. ENGR. R. KINOSHITA				
DIST. ADM. R.Q. ANDERSON				
	DATE	REVISION	BY	APP'D

REGION NO.	STATE	FED. AID PROJ. NO.	SHEET NO.	TOTAL SHEETS
10	WASH	I-IM-405-3(791)		
JOB NUMBER 92W070				
CONTRACT NO.				

PROGRAM DEVELOPMENT DIVISION

APPROVED

Washington State Department of Transportation

HDR ENGINEERING INC.

ANNE SYMONDS & ASSOC., INC.
CONSULTING ENGINEERS

SR 405
NORTHUP TO BOTHELL
HOV AND SC&DI - STAGE 1

DRAINAGE PLAN

DR2

SHEET 60 OF 474 SHEETS

SR405 NORTHUP TO BOTHELL HOV LANES - STAGE 1 MP16.06 to MP22.50 OL0889

9:30AM 7/1/92 1405N-02.DWG 1"=50'

T. 25N. R.5E. W.M.

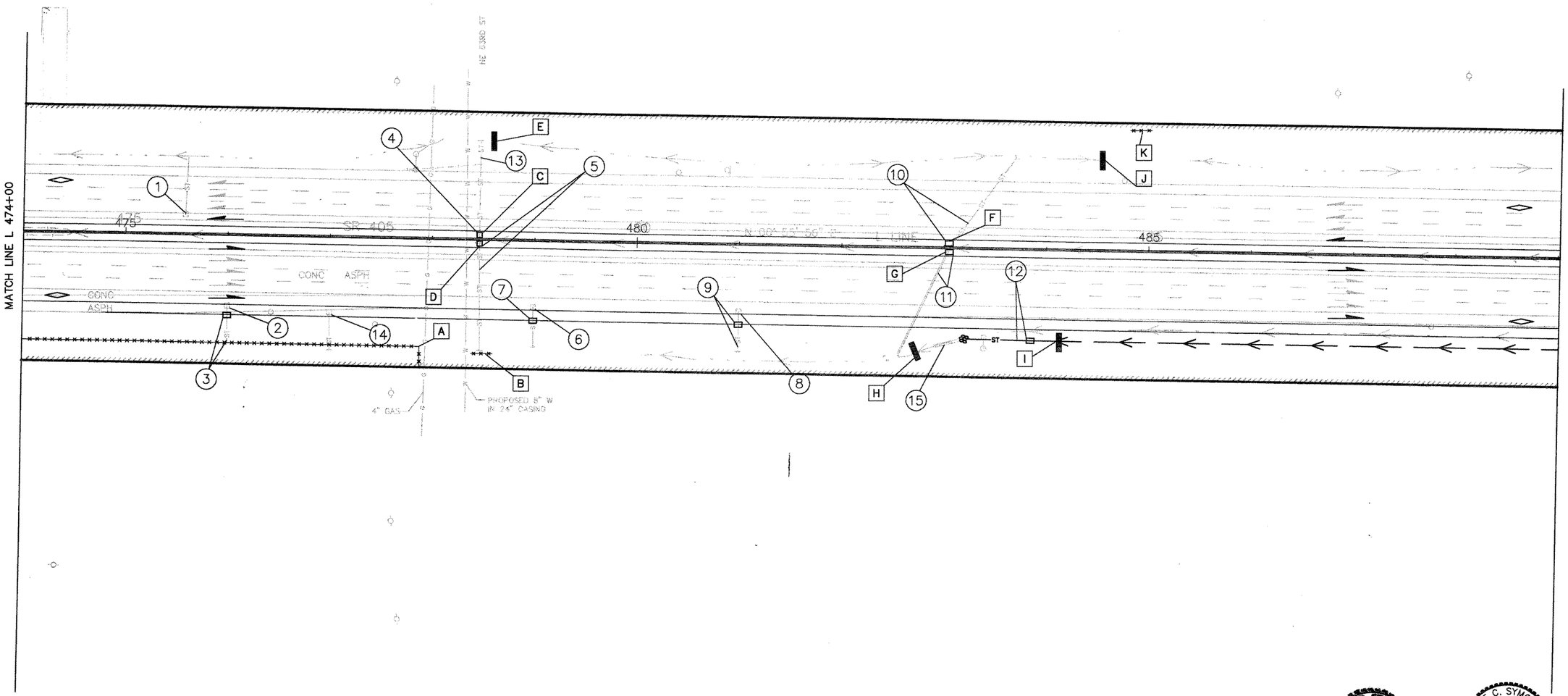

0 50 100
SCALE IN FEET

REFER TO SHEET DR1 FOR LEGEND

DESIGNED	B.A./C.R.	5/92				REGION NO.	STATE	FED. AID PROJ. NO.	SHEET NO.	TOTAL SHEETS
DRAWN	M.S., M.T.F.	5/92				10	WASH	I-IM-405-3(791)		
REVIEWED	A.C.S.	6/92				JOB NUMBER 92W070				
PROJ. ENGR.	R. KINOSHITA					CONTRACT NO.				
DIST. ADM.	R.Q. ANDERSON									
		DATE	REVISION	BY	APP'D					

PROGRAM DEVELOPMENT DIVISION

APPROVED

Washington State Department of Transportation

HDR ENGINEERING INC.

ANNE SYMONDS & ASSOC., INC.
CONSULTING ENGINEERS

SR 405
NORTHUP TO BOTHELL
HOV AND SC&DI - STAGE 1

DRAINAGE PLAN

DR3

SHEET 61 OF 474 SHEETS

9:30AM 7/1/92 1405N-03.DWG 1"=50'

NORTHUP TO BOTHELL HOV LANES - STAGE 1 MP 16.06 to MP22.50 DL 08B9

T. 25N. R.5E. W.M.

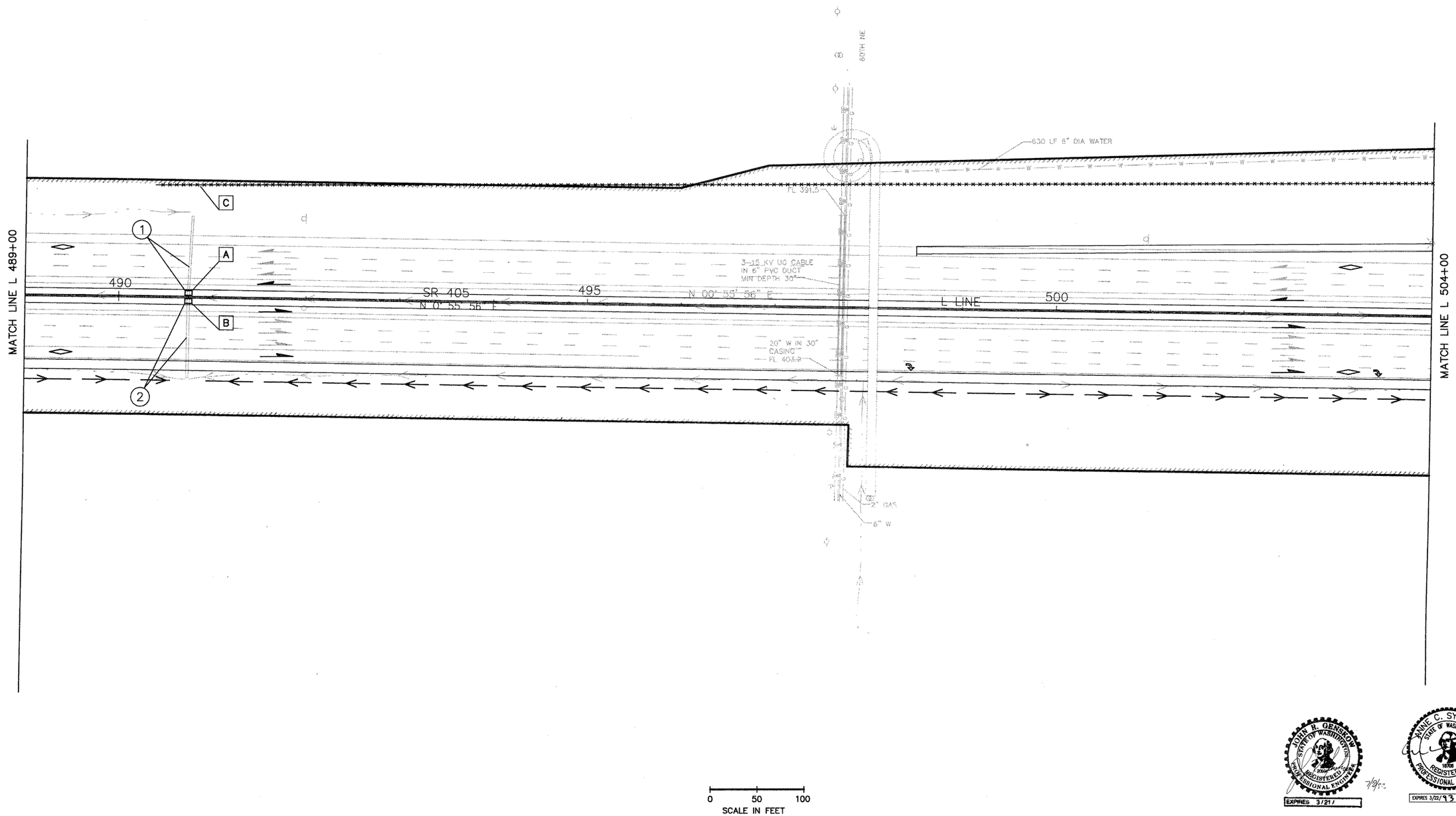

REFER TO SHEET DR1 FOR LEGEND

DESIGNED B.A./C.R.	5/92				REGION NO.	STATE	FED. AID PROJ. NO.	SHEET NO.	TOTAL SHEETS
DRAWN M.S., M.T.F.	5/92				10	WASH	I-IM-405-3(791)		
REVIEWED A.C.S.	6/92				JOB NUMBER 92W070				
PROJ. ENGR. R. KINOSHITA					CONTRACT NO.				
DIST. ADM. R.Q. ANDERSON									
	DATE	REVISION	BY	APP'D					

PROGRAM DEVELOPMENT DIVISION

APPROVED

Washington State Department of Transportation

HDR ENGINEERING INC.

ANNE SYMONDS & ASSOC., INC.
CONSULTING ENGINEERS

SR 405
NORTHUP TO BOTHELL
HOV AND SC&DI - STAGE 1

DRAINAGE PLAN

DR4

SHEET 62 OF 474 SHEETS

9:30AM 7/1/92 1405N-04.DWG 1" =50'

NORTHUP TO BOTHELL
HOV LANES - STAGE 1
MP 16.06 to MP22.50 010889

T. 25N. R.5E. W.M.

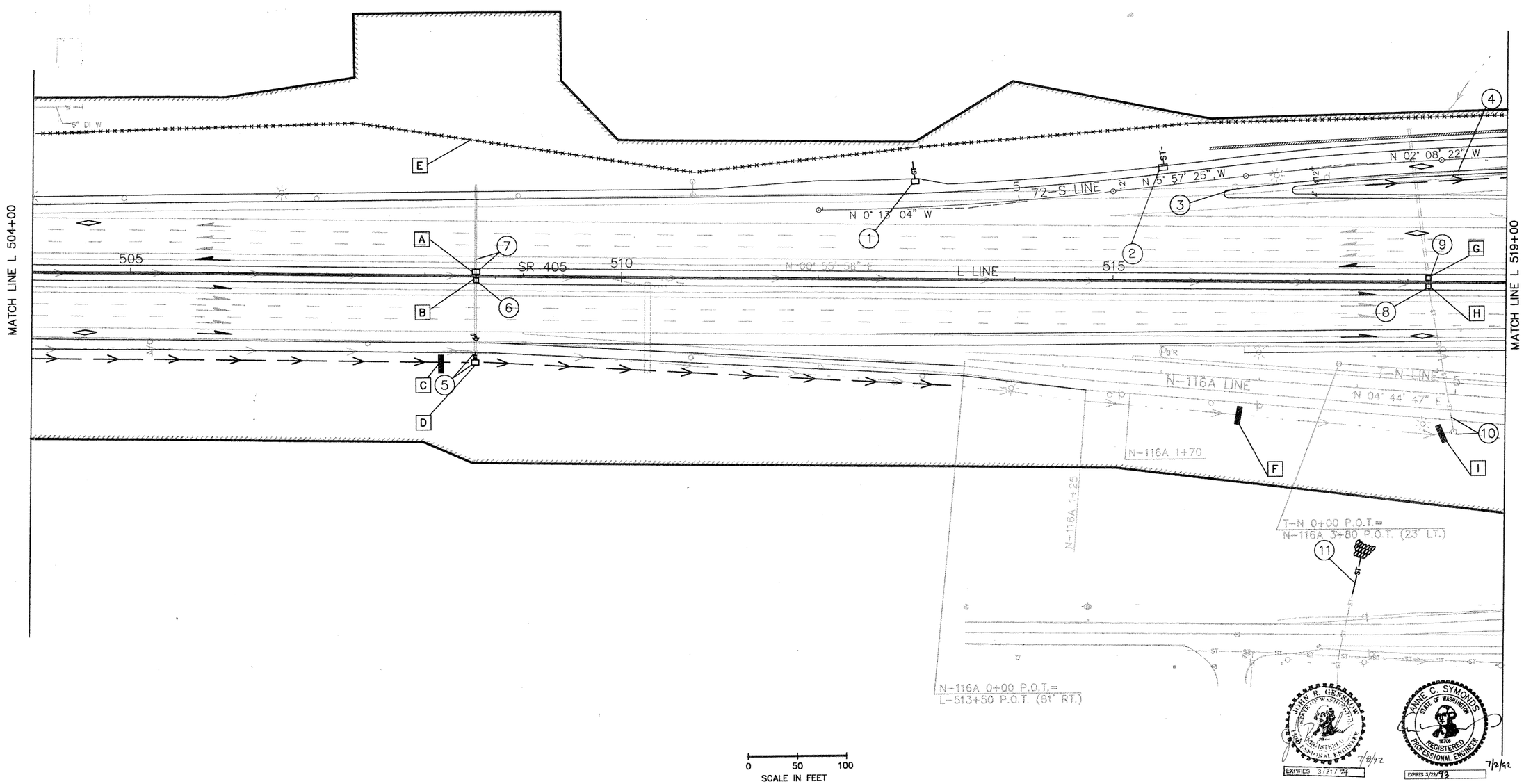

REFER TO SHEET DR1 FOR LEGEND

DESIGNED	B.A./C.R.	5/92				REGION NO. 10	STATE WASH	FED. AID PROJ. NO. I-IM-405-3(791)	SHEET NO.	TOTAL SHEETS	PROGRAM DEVELOPMENT DIVISION
DRAWN	M.S., M.T.F.	5/92				JOB NUMBER 92W070					
REVIEWED	A.C.S.	6/92				CONTRACT NO.					APPROVED
PROJ. ENGR.	R. KINOSHITA										
DIST. ADM.	R.Q. ANDERSON										
		DATE	REVISION	BY	APP'D						

Washington State Department of Transportation

HDR ENGINEERING INC.

ANNE SYMONDS & ASSOC., INC. CONSULTING ENGINEERS

SR 405
NORTHUP TO BOTHELL
HOV AND SC&DI - STAGE 1

DRAINAGE PLAN

DR5

SHEET 63 OF 474 SHEETS

SR405 NORTHUP TO BOTHELL HOV LANES - STAGE 1 MP 16.06 to MP22.50 (0.0680)

1405N-05.DWG 7/1/92 9:30AM 1"=50'

T. 25N. R.5E. W.M.

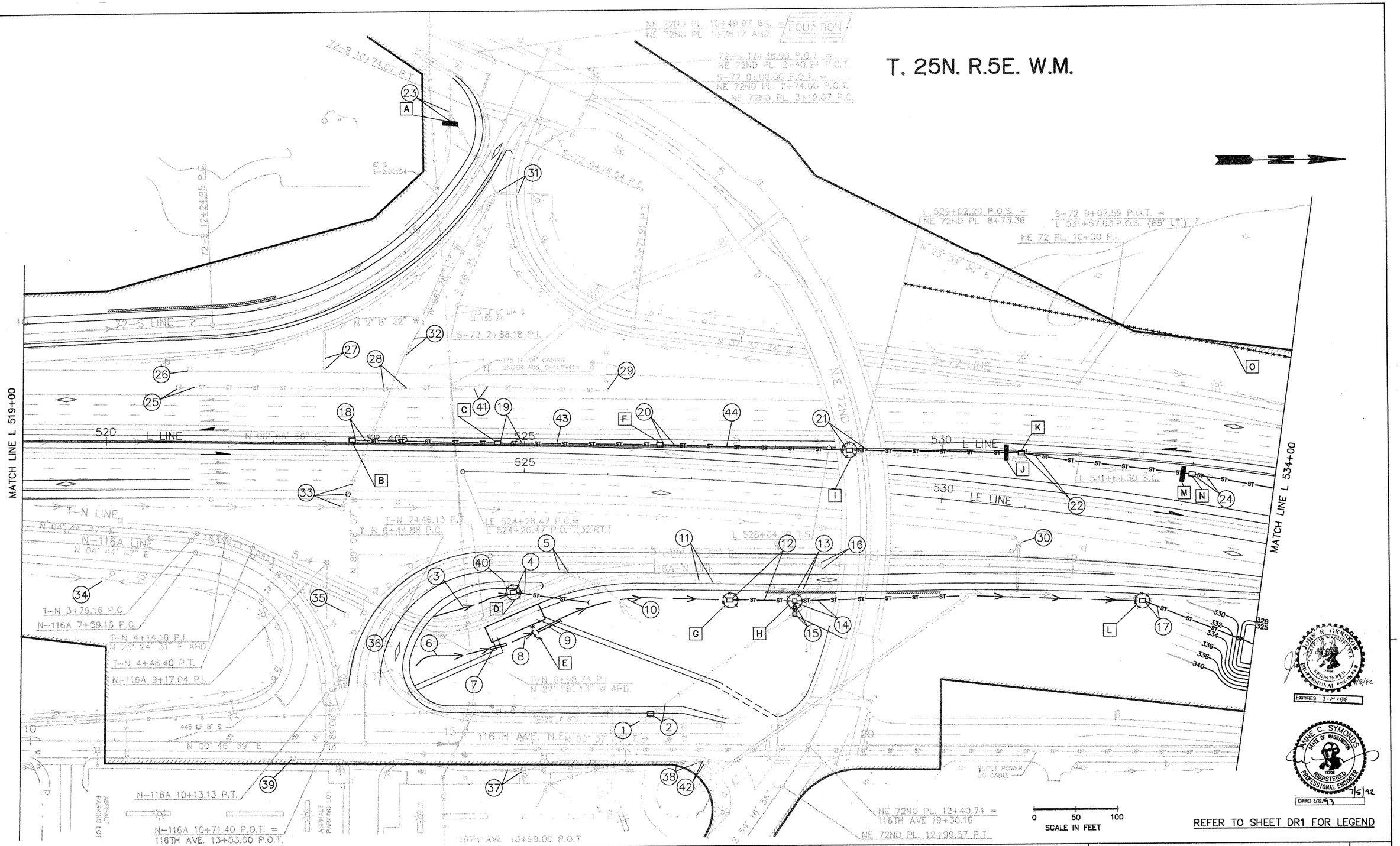

DESIGNED	B.A./C.R.	5/92	
DRAWN	M.S., M.T.F.	5/92	
REVIEWED	A.C.S.	6/92	
PROJ. ENGR.	R. KINOSHITA		
DIST. ADM.	R.Q. ANDERSON		

DATE	REVISION	BY	APP'D

REGION NO.	STATE	FED. AID PROJ. NO.	SHEET NO.	TOTAL SHEETS
10	WASH	I-IM-405-3(791)		

JOB NUMBER 92W070

CONTRACT NO.

PROGRAM DEVELOPMENT DIVISION

APPROVED

Washington State Department of Transportation

HDR ENGINEERING INC.

ANNE SYMONDS & ASSOC., INC. CONSULTING ENGINEERS

SR 405
NORTHUP TO BOTHELL
HOV AND SC&DI - STAGE 1

DRAINAGE PLAN

DR6

SHEET 64 OF 474 SHEETS

9:30AM 7/1/92 1405N-06.DWG 1"=50'

SR405 NORTHUP TO BOTHELL HOV LANES - STAGE 1 MP 16.06 to MP 22.50 OL0897

T. 25N. R.5E. W.M.

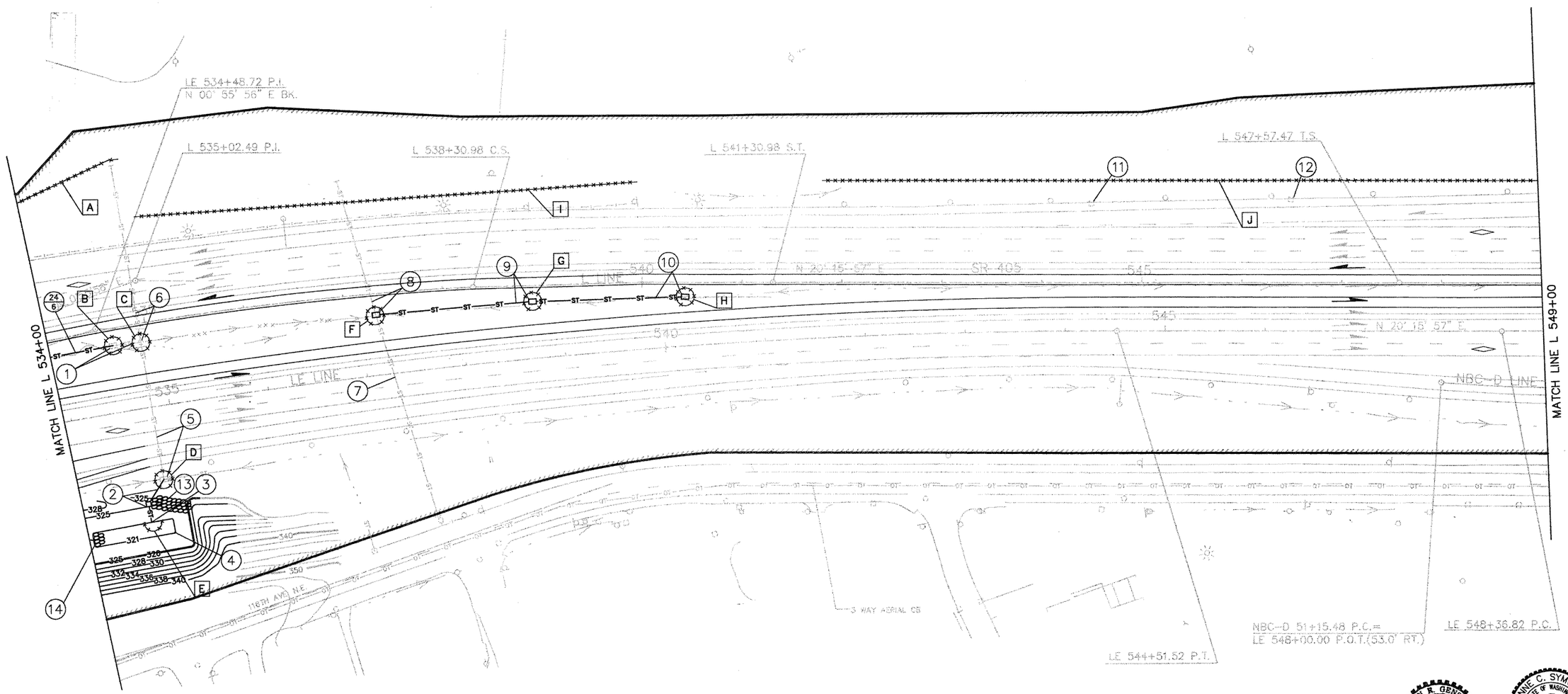

0 50 100
SCALE IN FEET

REFER TO SHEET DR1 FOR LEGEND

DESIGNED	B.A./C.R.	5/92			
DRAWN	M.S., M.T.F.	5/92			
REVIEWED	A.C.S.	6/92			
PROJ. ENGR.	R. KINOSHITA				
DIST. ADM.	R.Q. ANDERSON				
		DATE	REVISION	BY	APP'D

REGION NO.	STATE	FED. AID PROJ. NO.	SHEET NO.	TOTAL SHEETS
10	WASH	I-IM-405-3(791)		
JOB NUMBER 92W070				
CONTRACT NO.				

PROGRAM DEVELOPMENT DIVISION

APPROVED

Washington State Department of Transportation

HDR ENGINEERING INC.

ANNE SYMONDS & ASSOC., INC. CONSULTING ENGINEERS

SR 405
NORTHUP TO BOTHELL
HOV AND SC&DI - STAGE 1

DRAINAGE PLAN

DR7

SHEET 65 OF 474 SHEETS

SR 405 NORTHUP TO BOTHELL HOV LANES - STAGE 1 MP 16.06 to MP 22.50 OL0889

1405N-07.DWG 7/1/92 2:00AM

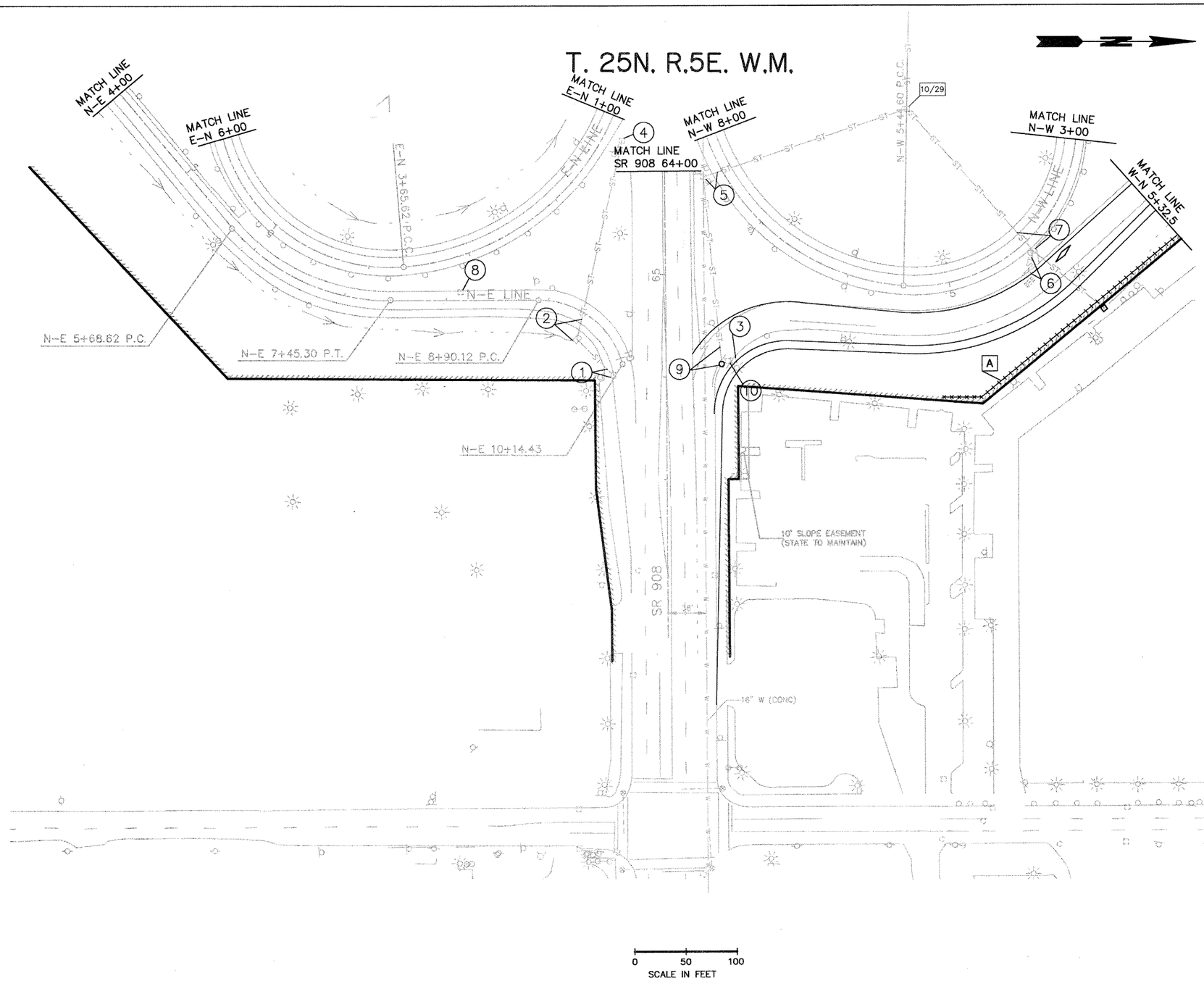

REFER TO SHEET DR1 FOR LEGEND

DESIGNED B.A./C.R.	5/92				REGION NO.	STATE	FED. AID PROJ. NO.	SHEET NO.	TOTAL SHEETS	PROGRAM DEVELOPMENT DIVISION
DRAWN M.S., M.T.F.	5/92				10	WASH	I-IM-405-3(791)			
REVIEWED A.C.S.	6/92				JOB NUMBER 92W070					
PROJ. ENGR. R. KINOSHITA					CONTRACT NO.					APPROVED
DIST. ADM. R.Q. ANDERSON										
	DATE	REVISION	BY	APP'D						

Washington State Department of Transportation

HDR ENGINEERING INC.

ANNE SYMONDS & ASSOC., INC. CONSULTING ENGINEERS

SR 405
NORTHUP TO BOTHELL
HOV AND SC&DI - STAGE 1

DRAINAGE PLAN

DR8

SHEET 66 OF 474 SHEETS

SR405 NORTHUP TO BOTHELL HOV LANES - STAGE 1 MP 16.06 to MP 22.50 QL0889

I405HI-08.DWG 7/1/92 2:00AM 1"=50'

T. 25N. R.5E. W.M.

SBC-D STA 64+09(295'LT)
POINT OF INTERSECTION
CURB 1 & 2

SBC-D STA 64+91(234'LT)
CENTER OF CURB 2

SBC-D STA 65+71(168'LT)
POINT OF TANGENT

SBC-D STA 64+48(174'LT)
CENTER CURB 1

SBC-D STA 64+91(134'LT)

SBC-D STA 65+71(134'LT)
POINT OF INTERSECTION
OF 2 TANGENTS

CURB 2 100'R
CURB 1 125'R

E-S 11+27.96 P.T.

E-S 4+12.09 P.T.

MH
IE 288.80±

L 550+21.02

SBC-D 54+31.42 P.C.=
L 550+57.47 S.C.(77' LT.)

L 550+57.47 S.C.

MATCH LINE L 549+00

SBC-D LINE

SBC-D 58+61.88 P.T.

LE LINE

NBC-D LINE

370 LF
12" SS, 20" CASING
S=0.007

MH
IE 316.48
IE 321.56

NBC-D 52+49.65 P.C.C.

170 LF 12" SS
S=0.0202

3 WAY AERIAL
CABLE

MH
IE 325.00±

LE 550+36.63 P.C.C.

NBC-D 53+55.42 P.C.C.

L 554+25.92 P.I.

LE 554+36.09 P.I.

N-E 0+00.00 P.O.T.=
NBC-D 59+24.82 P.O.C. (30'RT.)

N-E 1+20 P.C.

LE 558+29.31 P.T.

N-E 3+95.49 P.T.

MATCH LINE
N-E 4+00

MATCH LINE
E-N 6+00

NBC-D 61+65.52 P.T.=
LE 558+29.31 P.T. (57'RT.)

LE 560+75.17 P.O.T.=
L 560+82.83 ST. (32'RT.)

E-N 9+61.31 P.O.T.=
NBC-D 65+93.60 P.O.C. (14'RT.)

NBC-D 65+56.19 P.C.=
L 562+27.64 P.C.(89'RT.)

E-N 8+98.81 P.

L 562+27.64

E-N 0+00.00 P.C.=
SR 908 62+47.74 P.O.T.(29.5'RT.)

MATCH LINE
E-N 1+00

MATCH LINE L 564+85

SR 405

SR 908

6" GAS IN
30" CASING

REFER TO SHEET DR1 FOR LEGEND

0 50 100
SCALE IN FEET

DESIGNED	B.A.	5/92				REGION NO.	STATE	FED. AID PROJ. NO.	SHEET NO.	TOTAL SHEETS
DRAWN	M.L.S., M.T.F.	5/92				10	WASH			
REVIEWED	A.C.S.	6/92				JOB NUMBER 92W070		I-IM-405-3(791)		
PROJ. ENGR.	R. KINOSHITA					CONTRACT NO.				
DIST. ADM.	R.Q. ANDERSON									
		DATE	REVISION	BY	APP'D					

PROGRAM DEVELOPMENT
DIVISION

APPROVED

Washington State
Department of Transportation

HDR ENGINEERING INC.

ANNE SYMONDS & ASSOC., INC.
CONSULTING ENGINEERS

SR 405
NORTHUP TO BOTHELL
HOV AND SC&DI - STAGE 1

DRAINAGE PLAN

DR9

SHEET 67 OF 474 SHEETS

9:30AM 7/1/92 1405N-09.DWG 1"=50'

NORTHUP TO BOTHELL
HOV LANES - STAGE 1
MP16.06 to MP22.50
OL0889

T. 25N. R.5E. W.M.

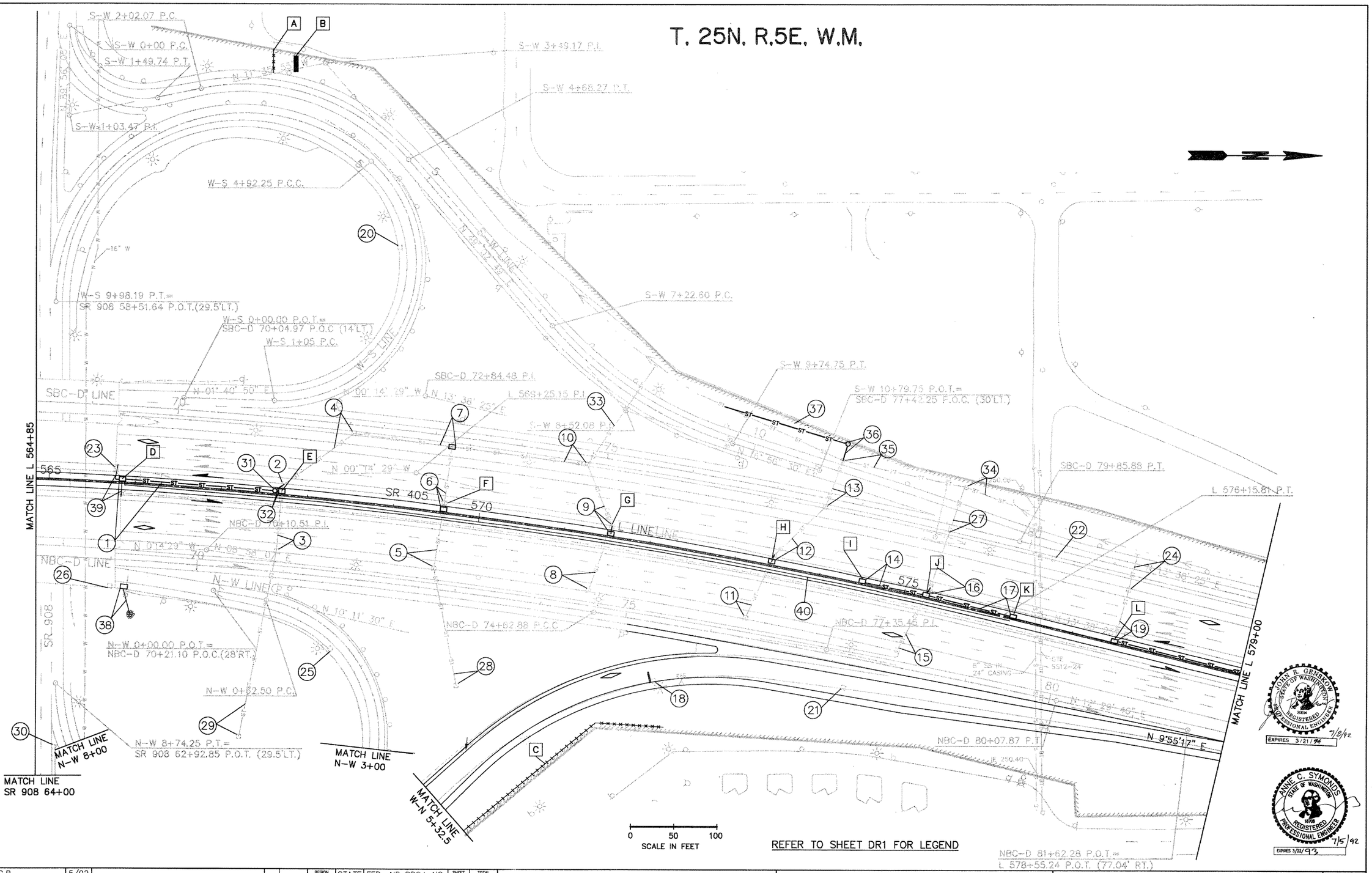

REFER TO SHEET DR1 FOR LEGEND

JOHN R. OBNSOW STATE OF WASHINGTON 10694 REGISTERED PROFESSIONAL ENGINEER 7/5/92 EXPIRES 3/21/94

ANNE C. SYMONDS STATE OF WASHINGTON 16706 REGISTERED PROFESSIONAL ENGINEER 7/5/92 EXPIRES 3/22/93

DESIGNED	B.A./C.R.	5/92				REGION NO.	STATE	FED. AID PROJ. NO.	SHEET NO.	TOTAL SHEETS
DRAWN	M.S., M.T.F.	5/92				10	WASH	I-IM-405-3(79I)		
REVIEWED	A.C.S	6/92				JOB NUMBER 92W070				
PROJ. ENGR.	R. KINOSHITA					CONTRACT NO.				
DIST. ADM.	R.Q. ANDERSON									
		DATE	REVISION	BY	APP'D					

PROGRAM DEVELOPMENT DIVISION

APPROVED

Washington State Department of Transportation

HDR ENGINEERING INC.

ANNE SYMONDS & ASSOC., INC. CONSULTING ENGINEERS

SR 405
NORTHUP TO BOTHELL
HOV AND SC&DI - STAGE 1

DRAINAGE PLAN

DR10

SHEET 68 OF 474 SHEETS

NORTHUP TO BOTHELL HOV LANES - STAGE 1 MP 16.06 to MP22.50 OL 0889

14056N-10.DWG 7/2/92 9:30AM 1"=50'

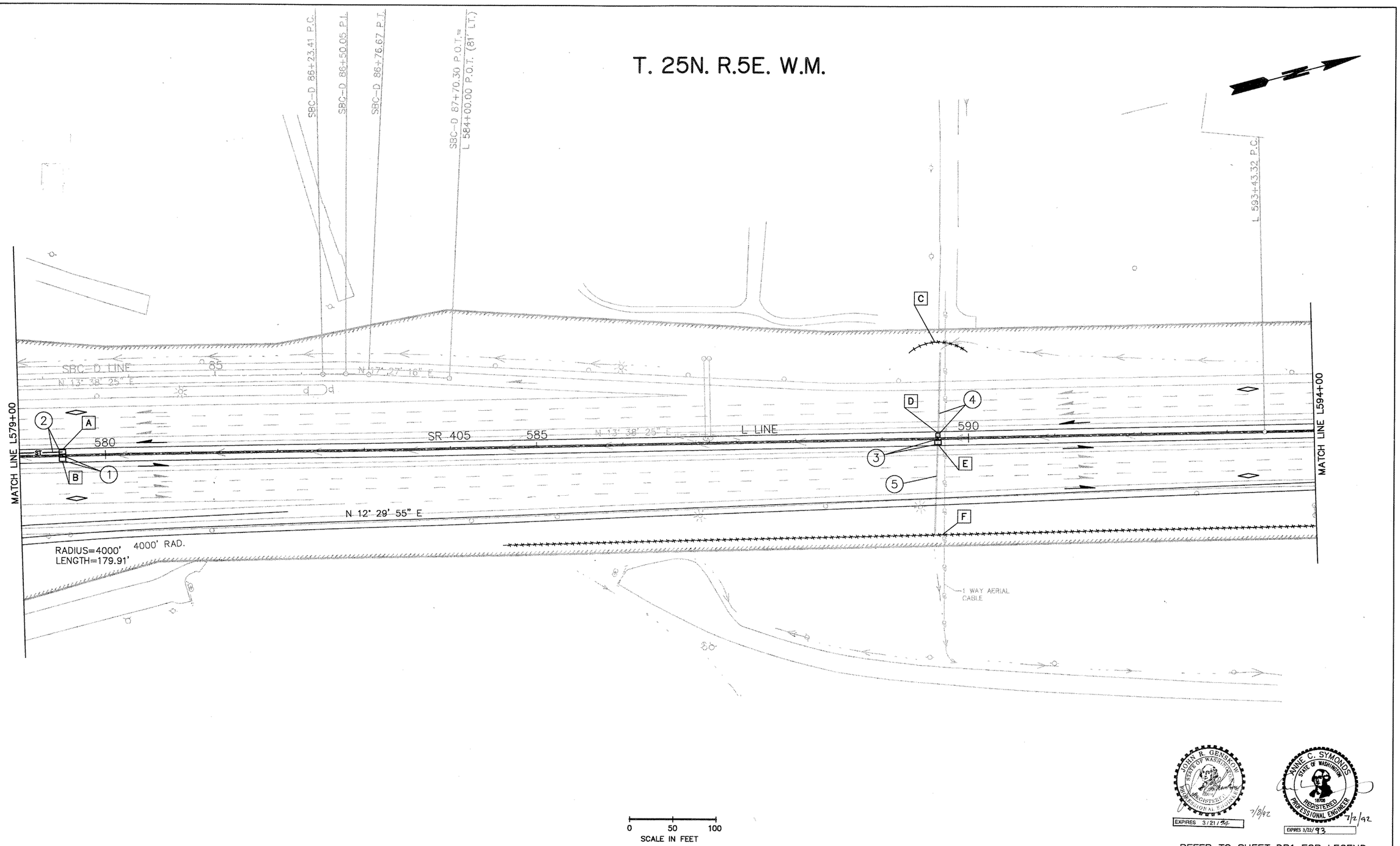

REFER TO SHEET DR1 FOR LEGEND

JOHN R. GENSKOW — STATE OF WASHINGTON — REGISTERED PROFESSIONAL ENGINEER — EXPIRES 3/21/94 — 7/2/92

ANNE C. SYMONDS — STATE OF WASHINGTON — 16706 — REGISTERED PROFESSIONAL ENGINEER — EXPIRES 3/22/93 — 7/2/92

DESIGNED	B.A./C.R.	5/92			
DRAWN	M.T.F.	5/92			
REVIEWED	A.C.S.	6/92			
PROJ. ENGR.	R. KINOSHITA				
DIST. ADM.	R.Q. ANDERSON				
		DATE	REVISION	BY	APP'D

REGION NO.	STATE	FED. AID PROJ. NO.	SHEET NO.	TOTAL SHEETS
10	WASH	I-IM-405-3(791)		
JOB NUMBER 92W070				
CONTRACT NO.				

PROGRAM DEVELOPMENT DIVISION

APPROVED

Washington State Department of Transportation

HDR ENGINEERING INC.

ANNE SYMONDS & ASSOC., INC. CONSULTING ENGINEERS

SR 405
NORTHUP TO BOTHELL
HOV AND SC&DI - STAGE 1

DRAINAGE PLAN

DR11

SHEET 69 OF 474 SHEETS

SR405 NORTHUP TO BOTHELL HOV LANES - STAGE 1 MP 16.06 to MP 22.50 (0.0882)

1405N-11.DWG 7/2/92 2:30PM 1" = 50'

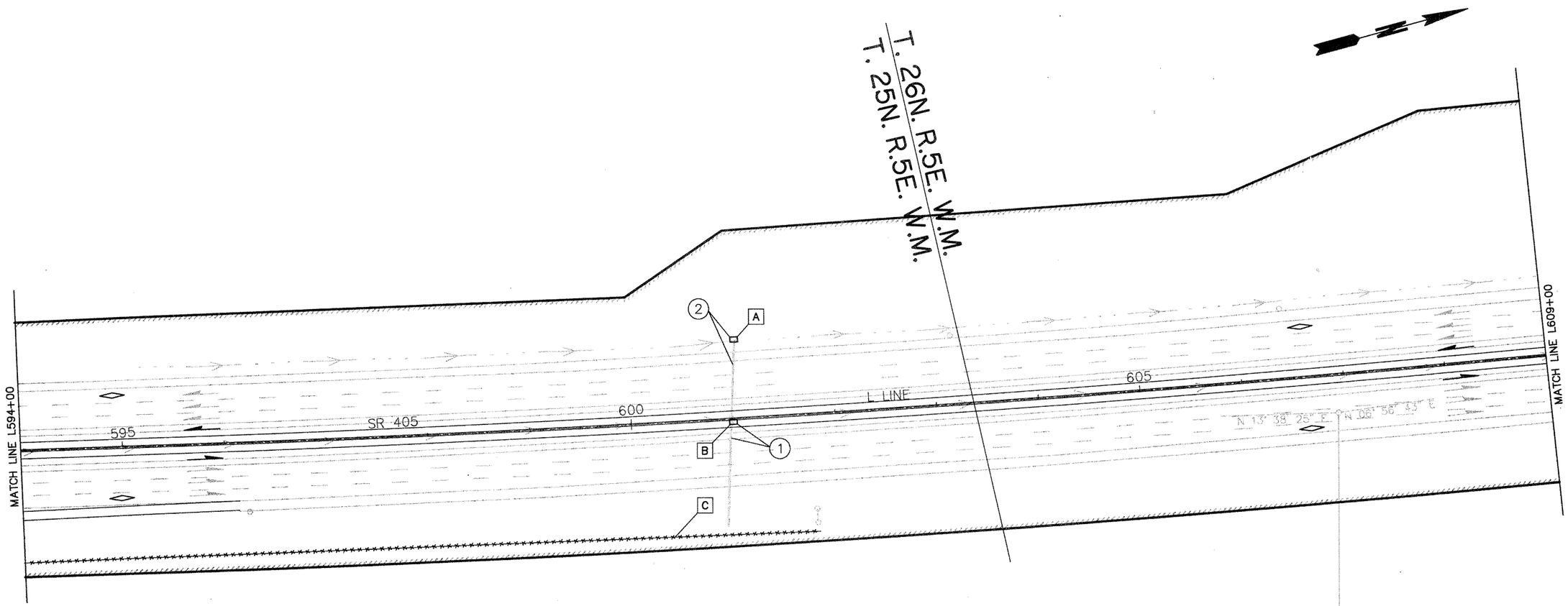

0 50 100
SCALE IN FEET

JOHN R. GENSKOW — STATE OF WASHINGTON — REGISTERED PROFESSIONAL ENGINEER — EXPIRES 3/21/94 — 7/8/92

ANNE C. SYMONDS — STATE OF WASHINGTON — 18708 — REGISTERED PROFESSIONAL ENGINEER — EXPIRES 3/22/93 — 7/5/92

REFER TO SHEET DR1 FOR LEGEND

DESIGNED B.A./C.R.	5/92				REGION NO.	STATE	FED. AID PROJ. NO.	SHEET NO.	TOTAL SHEETS
DRAWN M.T.F., M.S.	5/92				10	WASH			
REVIEWED A.C.S.	6/92				JOB NUMBER 92W070		I-IM-405-3(791)		
PROJ. ENGR. R. KINOSHITA					CONTRACT NO.				
DIST. ADM. R.Q. ANDERSON									
	DATE	REVISION	BY	APP'D					

PROGRAM DEVELOPMENT DIVISION

APPROVED

Washington State Department of Transportation

HDR ENGINEERING INC.

ANNE SYMONDS & ASSOC., INC.
CONSULTING ENGINEERS

SR 405
NORTHUP TO BOTHELL
HOV AND SC&DI - STAGE 1

DRAINAGE PLAN

DR12

SHEET 70 OF 474 SHEETS

NORTHUP TO BOTHELL
HOV LANES - STAGE 1
MP 16.06 to MP22.50
CL0887

I405N-12.DWG

7/2/92

1 PM

1"=50'

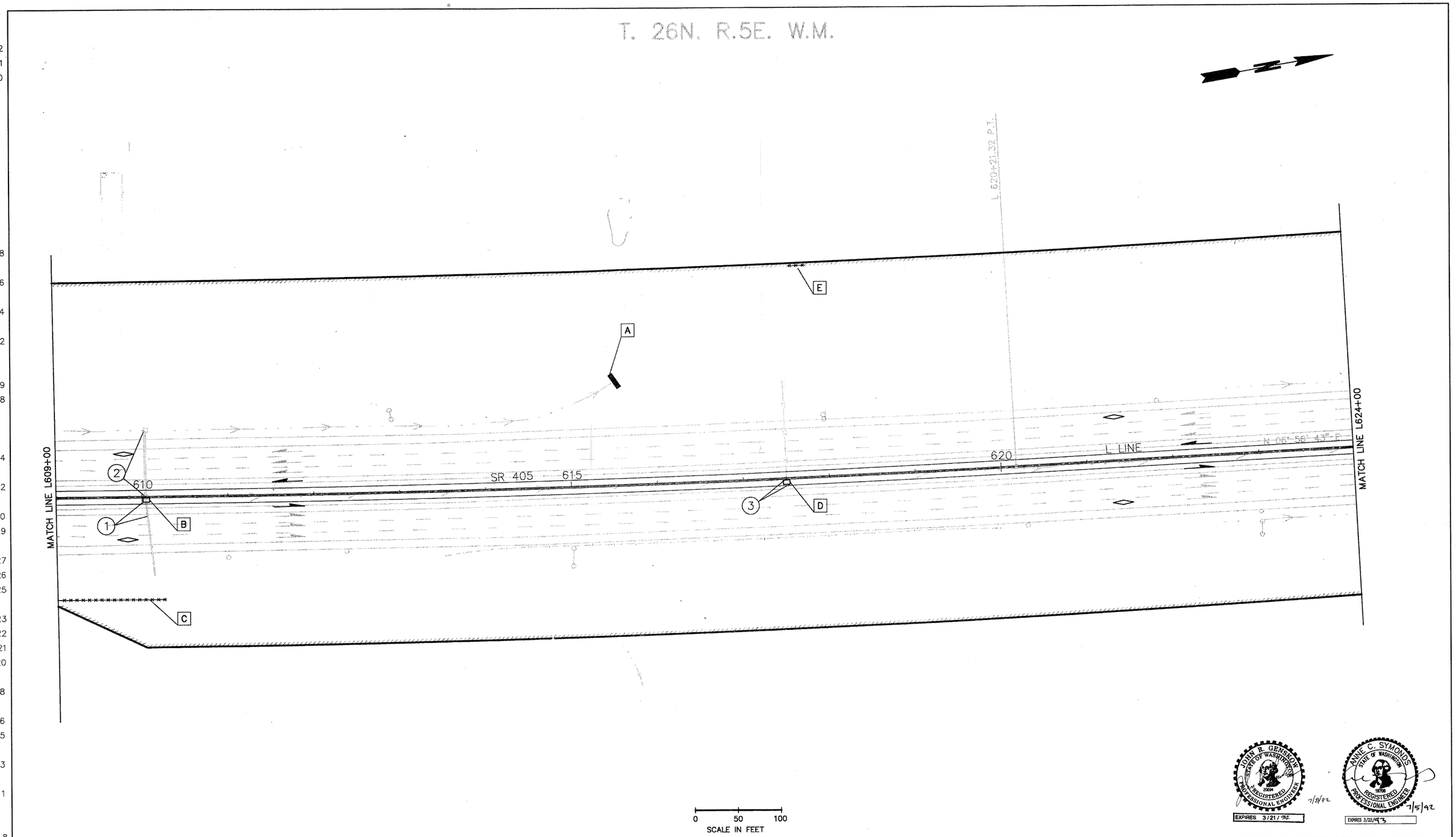

JOHN R. GENISKOW STATE OF WASHINGTON 20694 REGISTERED PROFESSIONAL ENGINEER
EXPIRES 3/21/92 7/2/92

ANNE C. SYMONDS STATE OF WASHINGTON 18706 REGISTERED PROFESSIONAL ENGINEER
EXPIRES 3/22/93 7/5/92

REFER TO SHEET DR1 FOR LEGEND

DESIGNED B.A./C.R.	5/92				REGION NO.	STATE	FED. AID PROJ. NO.	SHEET NO.	TOTAL SHEETS	PROGRAM DEVELOPMENT DIVISION
DRAWN M.T.F.	5/92				10	WASH				
REVIEWED A.C.S.	6/92				JOB NUMBER		I-IM-405-3(79)			
PROJ. ENGR. R. KINOSHITA					92W070					
DIST. ADM. R.Q. ANDERSON					CONTRACT NO.					APPROVED
	DATE	REVISION	BY	APP'D						

Washington State Department of Transportation

HDR ENGINEERING INC.

ANNE SYMONDS & ASSOC., INC. CONSULTING ENGINEERS

SR 405
NORTHUP TO BOTHELL
HOV AND SC&DI - STAGE 1

DRAINAGE PLAN

DR13

SHEET 71 OF 474 SHEETS

1 PM 7/2/92 1"=50' I405N-13.DWG

SR405 NORTHUP TO BOTHELL HOV LANES - STAGE 1 MP 16.06 to MP 22.50 OL0889

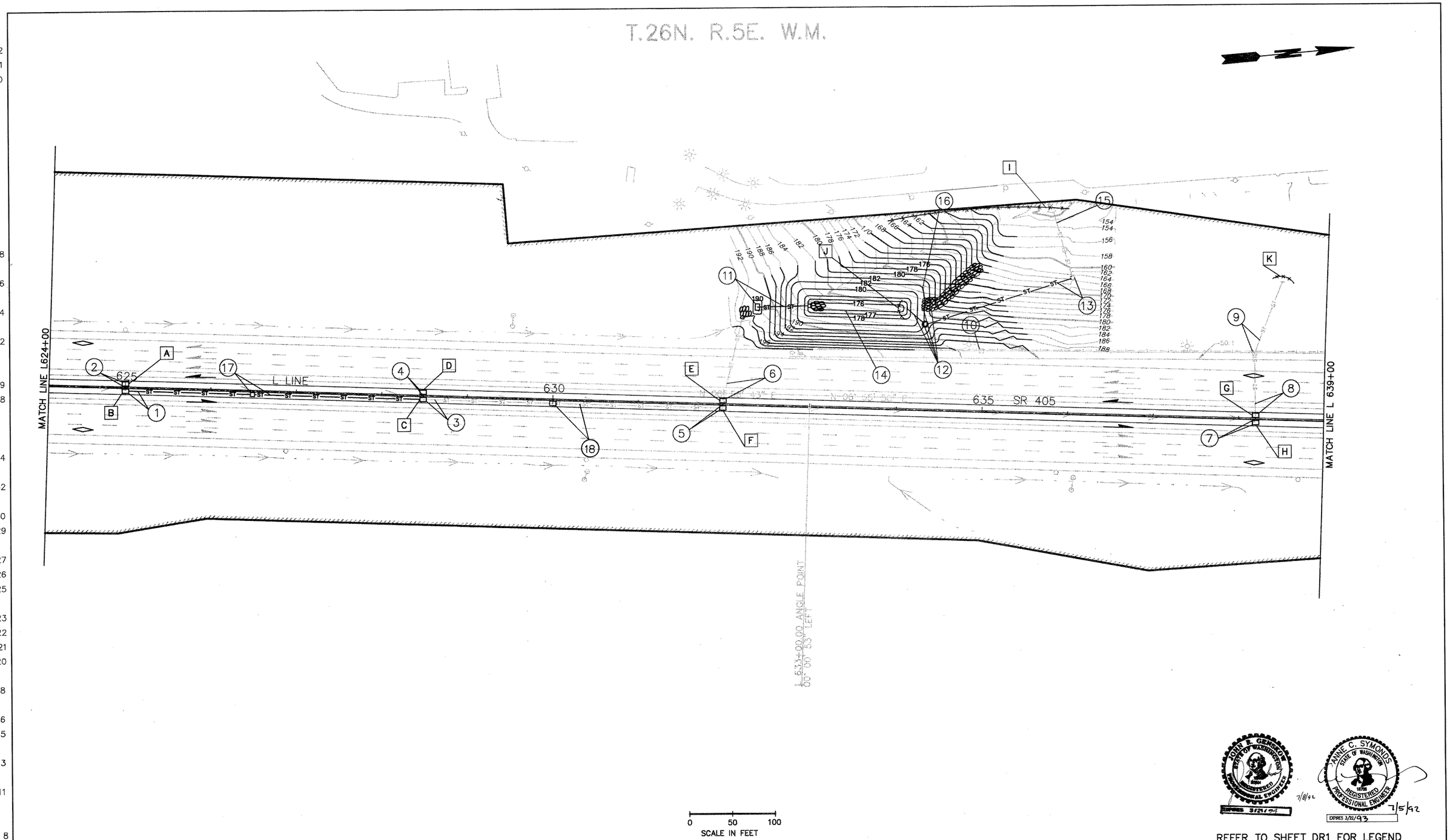

REFER TO SHEET DR1 FOR LEGEND

DESIGNED	B.A./C.R.	5/92				REGION NO.	STATE	FED. AID PROJ. NO.	SHEET NO.	TOTAL SHEETS	PROGRAM DEVELOPMENT DIVISION
DRAWN	M.L.S., M.T.F.	5/92				10	WASH	I-IM-405-3(79I)			
REVIEWED	A.C.S.	6/92				JOB NUMBER 92W070					
PROJ. ENGR.	R. KINOSHITA					CONTRACT NO.					APPROVED
DIST. ADM.	R.Q. ANDERSON										
		DATE	REVISION	BY	APP'D						

Washington State Department of Transportation

HDR ENGINEERING INC.

ANNE SYMONDS & ASSOC., INC. CONSULTING ENGINEERS

SR 405
NORTHUP TO BOTHELL
HOV AND SC&DI - STAGE 1

DRAINAGE PLAN

DR14

SHEET 72 OF 474 SHEETS

SR405 NORTHUP TO BOTHELL HOV LANES - STAGE 1 MP 16.05 to MP22.50 OL0887

9:30AM 7/2/92 1"=50' I405N-14.DWG

T.26N. R.5E. W.M.

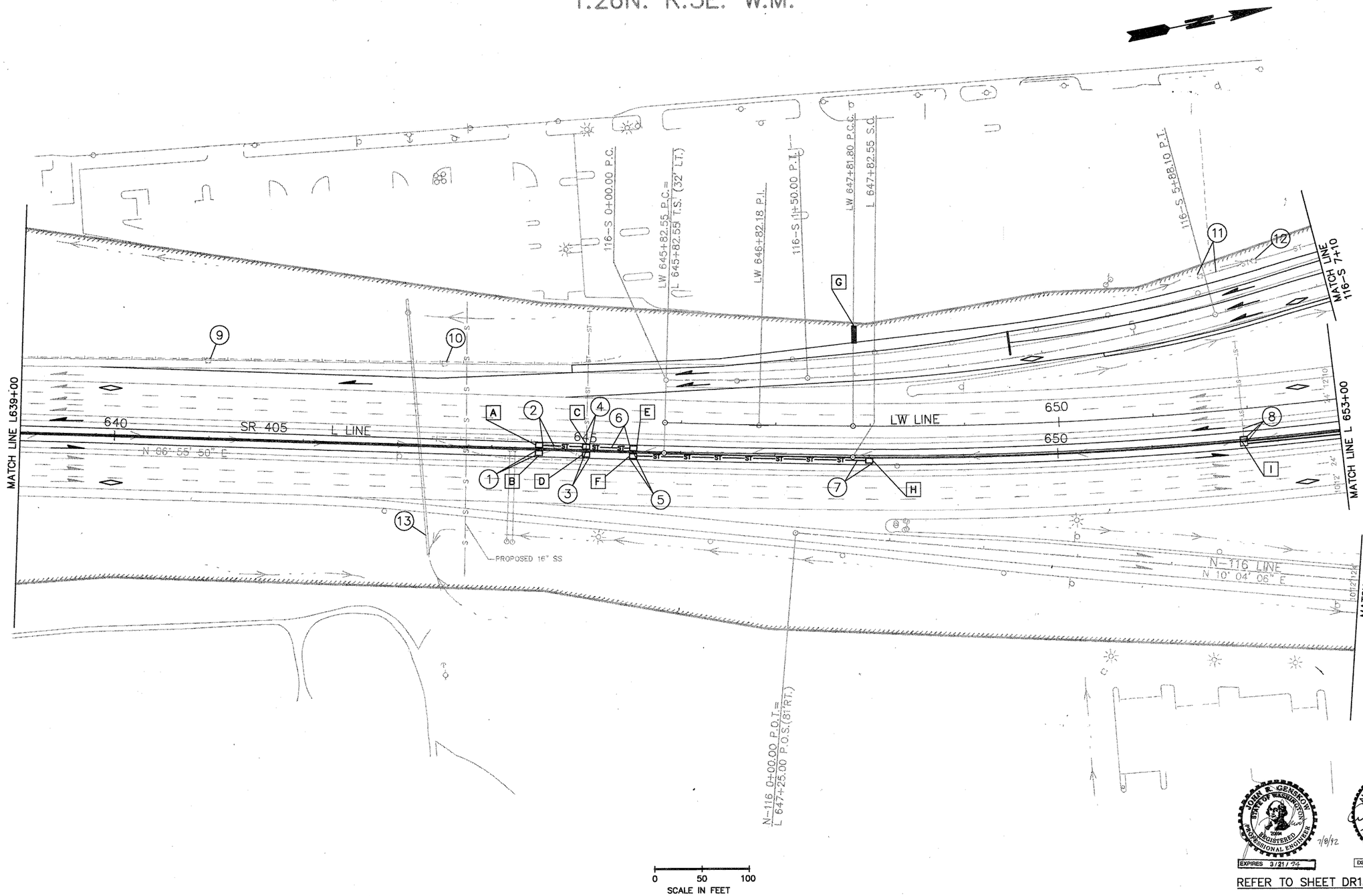

0 50 100
SCALE IN FEET

JOHN F. GENSMAN STATE OF WASHINGTON 20204 REGISTERED PROFESSIONAL ENGINEER 7/2/92 EXPIRES 3/21/94

ANNE C. SYMONDS STATE OF WASHINGTON 16708 REGISTERED PROFESSIONAL ENGINEER 7/2/92 EXPIRES 3/22/93

REFER TO SHEET DR1 FOR LEGEND

HOV LANES - STAGE 1
MP 16.06 to MP22.50 OL0889

DESIGNED B.A./C.R.	5/92				REGION NO.	STATE	FED. AID PROJ. NO.	SHEET NO.	TOTAL SHEETS	PROGRAM DEVELOPMENT DIVISION
DRAWN M.T.F.	5/92				10	WASH	I-IM-405-3(791)			
REVIEWED A.C.S.	6/92				JOB NUMBER 92W070					
PROJ. ENGR. R. KINOSHITA					CONTRACT NO.					APPROVED
DIST. ADM. R.Q. ANDERSON										
	DATE	REVISION	BY	APP'D						

Washington State Department of Transportation

HDR ENGINEERING INC.

ANNE SYMONDS & ASSOC., INC.
CONSULTING ENGINEERS

SR 405
NORTHUP TO BOTHELL
HOV AND SC&DI - STAGE 1

DRAINAGE PLAN

DR15

SHEET 73 OF 474 SHEETS

T.26N. R.5E. W.M.

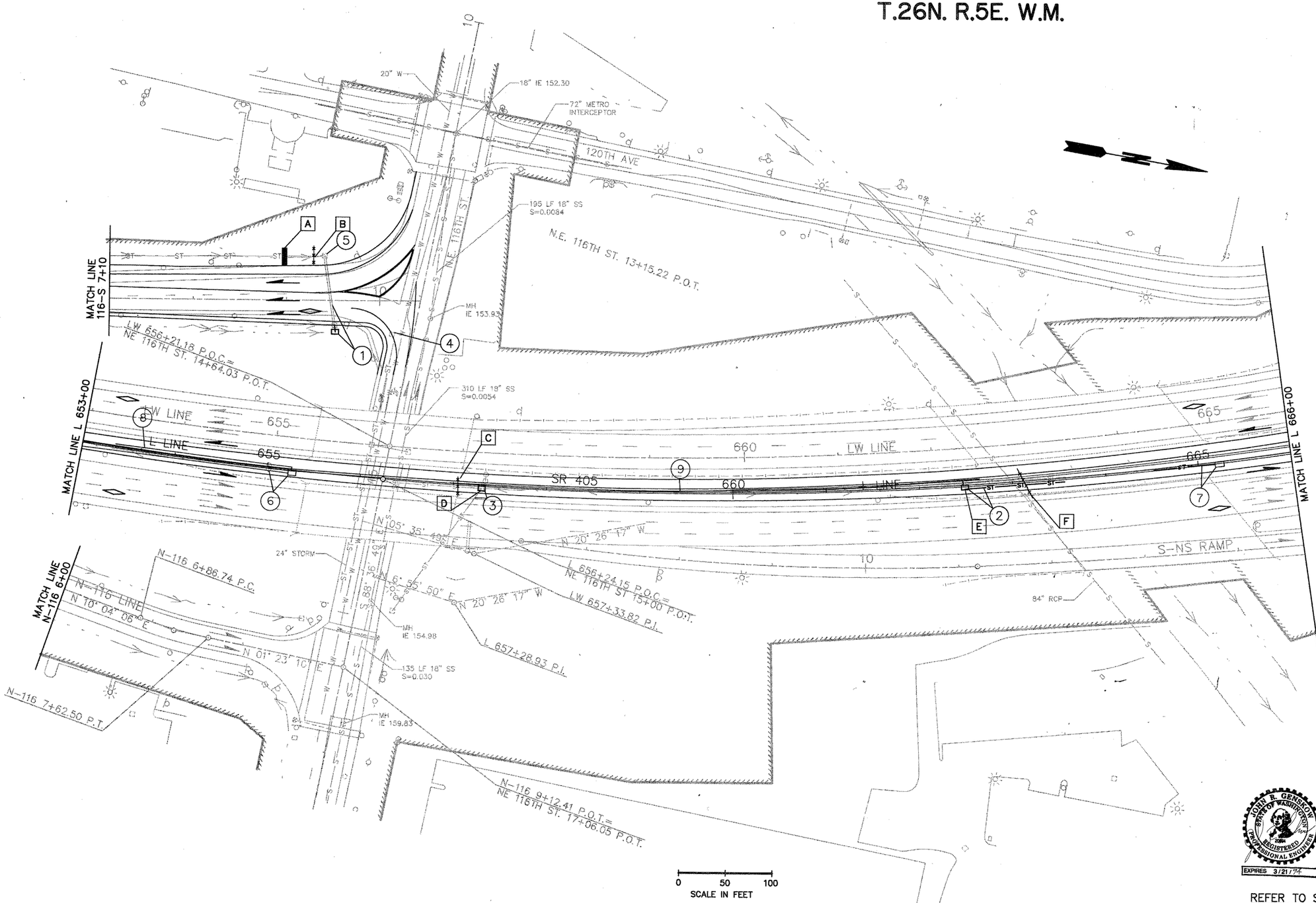

JOHN R. GENSLER STATE OF WASHINGTON 22884 REGISTERED PROFESSIONAL ENGINEER 7/9/92 EXPIRES 3/21/94

ANNE C. SYMONDS STATE OF WASHINGTON 19724 REGISTERED PROFESSIONAL ENGINEER 7/2/92 EXPIRES 3/22/93

REFER TO SHEET DR1 FOR LEGEND

DESIGNED	B.A./C.R.	5/92				REGION NO.	STATE	FED. AID PROJ. NO.	SHEET NO.	TOTAL SHEETS
DRAWN	M.L.S., M.T.F.	5/92				10	WASH	I-IM-405-3(791)		
REVIEWED	A.C.S.	6/92				JOB NUMBER 92W070				
PROJ. ENGR.	R. KINOSHITA					CONTRACT NO.				
DIST. ADM.	R.Q. ANDERSON									
		DATE	REVISION	BY	APP'D					

PROGRAM DEVELOPMENT DIVISION

APPROVED

Washington State Department of Transportation

HDR ENGINEERING INC.

ANNE SYMONDS & ASSOC., INC. CONSULTING ENGINEERS

SR 405 NORTHUP TO BOTHELL HOV AND SC&DI - STAGE 1

DRAINAGE PLAN

DR16

SHEET 74 OF 474 SHEETS

SR405 NORTHUP TO BOTHELL HOV LANES - STAGE 1 MP 16.06 to MP22.50 CL0687

1405N-16.DWG 7/1/92 9:30AM 1"=50'

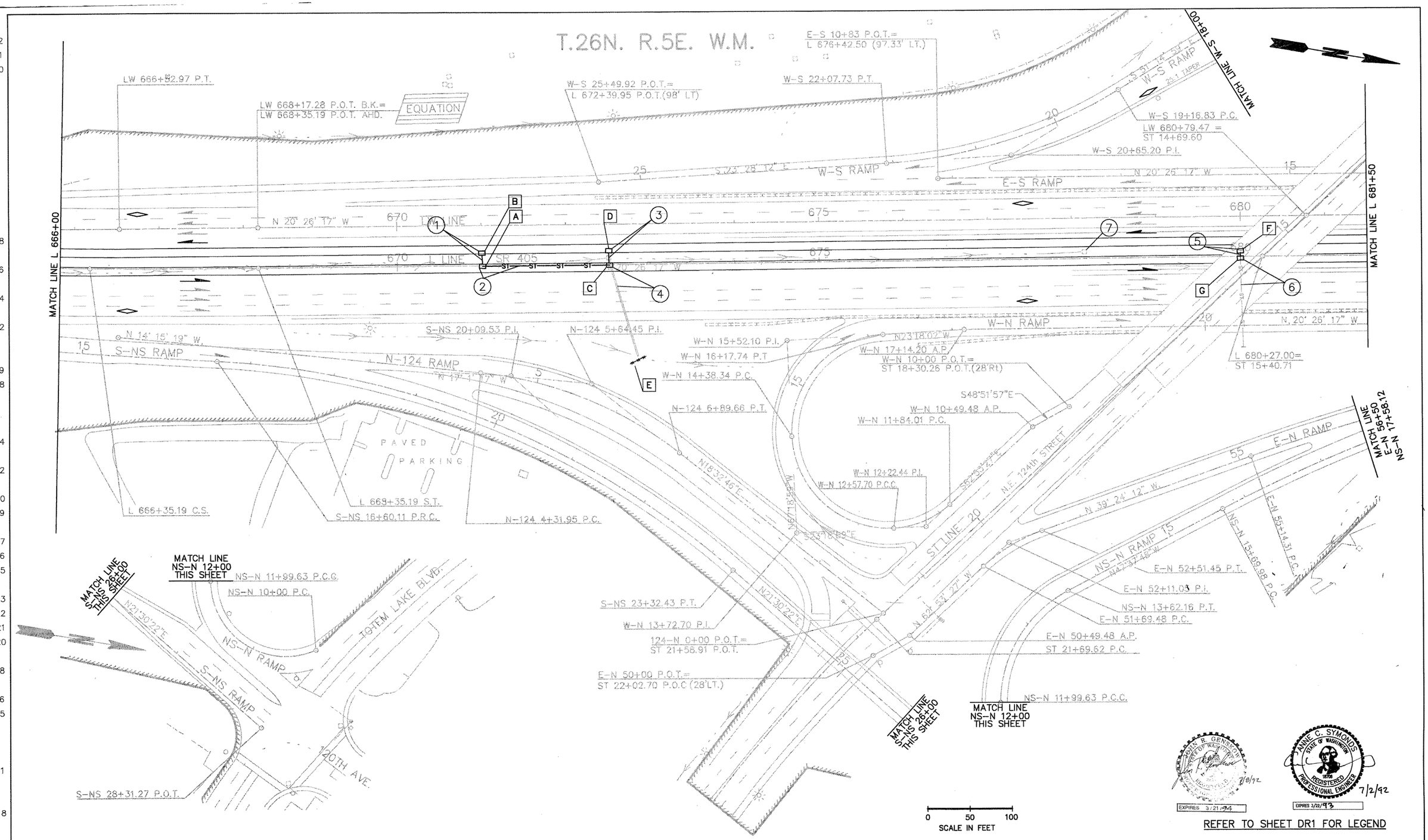

REFER TO SHEET DR1 FOR LEGEND

EXPIRES 3/21/94 — 7/2/92

EXPIRES 3/22/93 — 7/2/92

DESIGNED	B.A./C.R.	5/92				REGION NO.	STATE	FED. AID PROJ. NO.	SHEET NO.	TOTAL SHEETS
DRAWN	M.S., M.T.F.	5/92				10	WASH	I-IM-405-3(79)		
REVIEWED	A.C.S.	6/92				JOB NUMBER 92W070				
PROJ. ENGR.	R. KINOSHITA					CONTRACT NO.				
DIST. ADM.	R.Q. ANDERSON									
		DATE	REVISION	BY	APP'D					

PROGRAM DEVELOPMENT DIVISION

APPROVED

Washington State Department of Transportation

HDR ENGINEERING INC.

ANNE SYMONDS & ASSOC., INC. CONSULTING ENGINEERS

SR 405 NORTHUP TO BOTHELL HOV AND SC&DI - STAGE 1

DRAINAGE PLAN

DR17

SHEET 75 OF 474 SHEETS

S2405 NORTHUP TO BOTHELL HOV LANES - STAGE 1 MP 16.06 to MP 22.50 OL0889

1405N-17.DWG 7/2/92 2:00AM 1"=50'

T.26N. R.5E. W.M.

W-S 10+00 P.C.=
ST 6+07.20 P.O.C. (42' RT)

W-S 10+87.20 P.T.

W-S 10+44.87 P.I.

ST 7+51.23 P.I.

ST 8+09 P.O.C.=
S-124 0+00 P.O.T.

E-S 24+83.07 P.I.

S-124 4+71.62 P.C.

S 57° 14' 59" E

86.71:1 TAPER

W-S RAMP

ST 9+21.40 P.T.

N 18° 40' 33" E

S-124 RAMP

E-S 25+27.04 P.T.

E-S 24+30.96 P.C.C.

ST LINE
NE 124TH ST

S 62° 53' 27" E

E-S 27+24 AP

E-S 27+73.67 P.O.T.=
ST 11+87.44 P.O.T.(28' LT)

MATCH LINE W-S 18+00

S48°51'17"E

E-S 18+83.25 A.P.

E-S 19+98.70 P.C.

S-124 6+14.8 P.I.

N16°37'26"W

N22°43'43"W

N 20° 26' 17" W

E-S RAMP

685

690

LW LINE

SR 405

W-N RAMP

NS-N 19+67.37 P.I.

NS 23+52.22 P.T.

N 22° 43' 50" W

NS-N 28+27.12 P.O.T.=
L 692+00 P.O.T. (82' RT)

W-N 27+11.20 P.O.T.=
L-686+68 P.O.T. (82' RT.)

E-N 57+24.41 P.O.T.=
NS-N 18+33 P.O.C. (21' LT)

N 4° 37' 45" W

N 39° 24' 4" W

NS-N RAMP

E-N 58+80.77 P.I.

MATCH LINE L 681+50

MATCH LINE L 693+00

MATCH LINE
E-N 56+50
NS-N 17+58.12

TOTEM LAKE BOULEVARD

0 50 100
SCALE IN FEET

REFER TO SHEET DR1 FOR LEGEND

JOHN R. GENSON — STATE OF WASHINGTON — 22004 — REGISTERED PROFESSIONAL ENGINEER — 7/8/92 — EXPIRES 3/21/94

ANNE C. SYMONDS — STATE OF WASHINGTON — 18705 — REGISTERED PROFESSIONAL ENGINEER — 7/2/92 — EXPIRES 3/22/93

MP 16.06 to MP22.50 OL0889

DESIGNED	B.A./C.R.	5/92	
DRAWN	M.S., M.T.F.	5/92	
REVIEWED	A.C.S.	6/92	
PROJ. ENGR.	R. KINOSHITA		
DIST. ADM.	R.Q. ANDERSON		
		DATE	REVISION / BY / APP'D

REGION NO.	STATE	FED. AID PROJ. NO.	SHEET NO.	TOTAL SHEETS
10	WASH	I-IM-405-3(791)		

JOB NUMBER 92W070

CONTRACT NO.

PROGRAM DEVELOPMENT DIVISION

APPROVED

Washington State Department of Transportation

HDR ENGINEERING INC.

ANNE SYMONDS & ASSOC., INC. CONSULTING ENGINEERS

SR 405
NORTHUP TO BOTHELL
HOV AND SC&DI - STAGE 1

DRAINAGE PLAN

DR18

SHEET 76 OF 474 SHEETS

T.26N. R.5E. W.M.

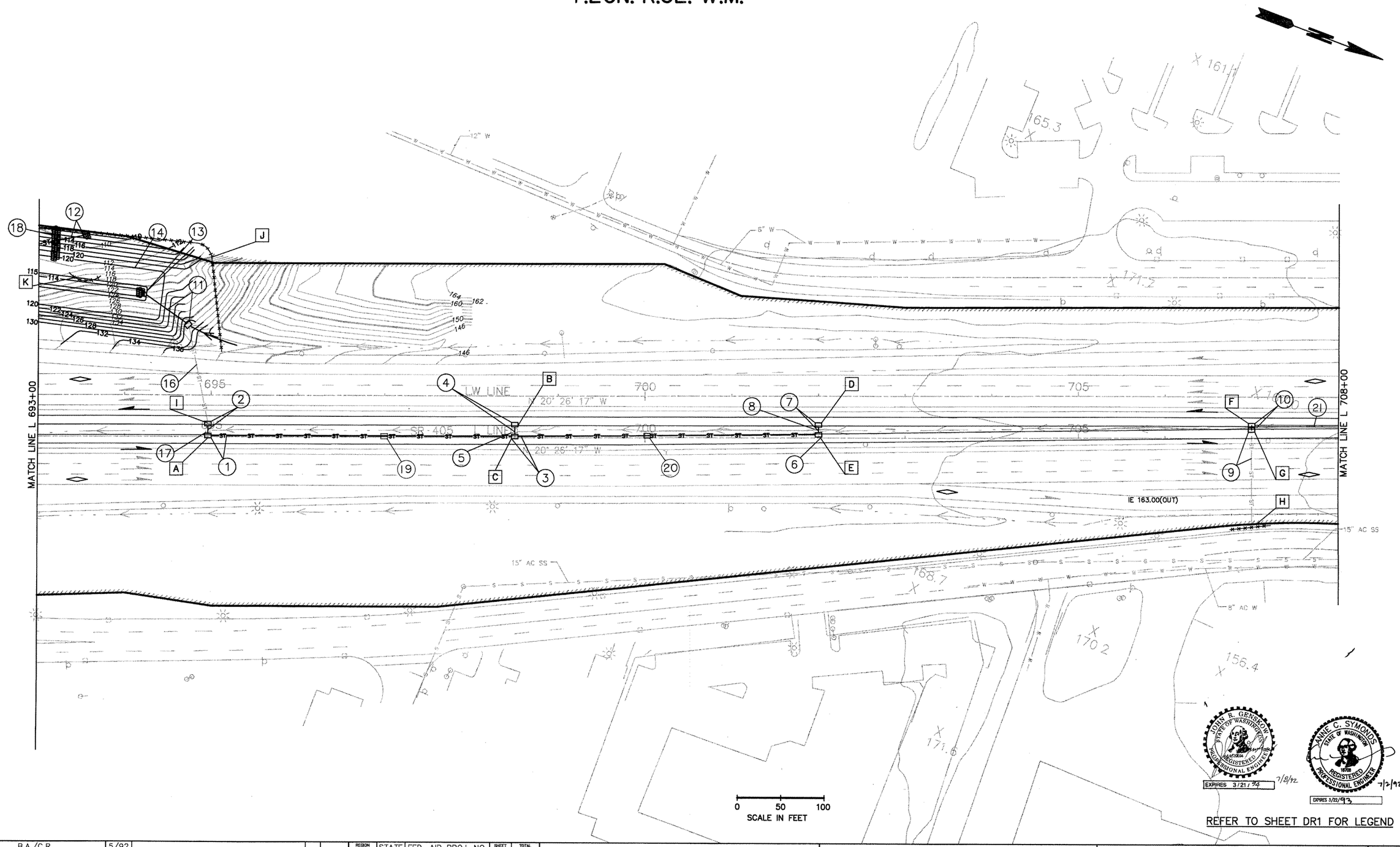

REFER TO SHEET DR1 FOR LEGEND

EXPIRES 3/21/94 7/2/92

EXPIRES 3/22/93 7/2/92

DESIGNED	B.A./C.R.	5/92				REGION NO.	STATE	FED. AID PROJ. NO.	SHEET NO.	TOTAL SHEETS
DRAWN	M.S., M.T.F.	5/92				10	WASH	I-IM-405-3(791)		
REVIEWED	A.C.S.	6/92				JOB NUMBER				
PROJ. ENGR.	R. KINOSHITA					92W070				
DIST. ADM.	R.Q. ANDERSON					CONTRACT NO.				
		DATE	REVISION	BY	APP'D					

PROGRAM DEVELOPMENT DIVISION

APPROVED

Washington State Department of Transportation

HDR ENGINEERING INC.

ANNE SYMONDS & ASSOC., INC. CONSULTING ENGINEERS

SR 405
NORTHUP TO BOTHELL
HOV AND SC&DI - STAGE 1

DRAINAGE PLAN

DR21

SHEET 7.7 OF 474 SHEETS

T.26N. R.5E. W.M.

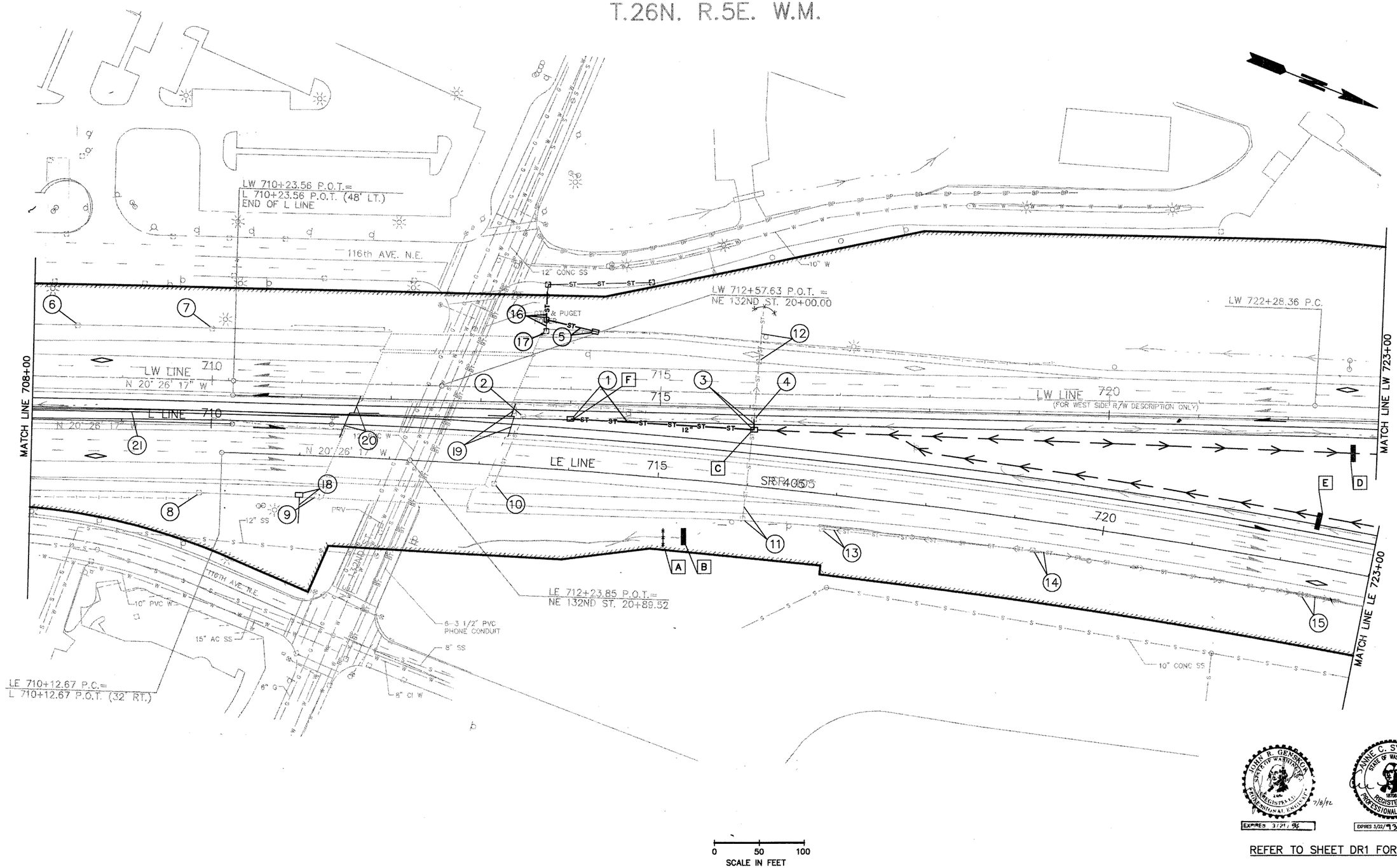

REFER TO SHEET DR1 FOR LEGEND

DESIGNED	B.A./C.R.	5/92				REGION NO.	STATE	FED. AID PROJ. NO.	SHEET NO.	TOTAL SHEETS
DRAWN	M.S., M.T.F.	5/92				10	WASH	I-IM-405-3(791)		
REVIEWED	A.C.S.	6/92				JOB NUMBER				
PROJ. ENGR.	R. KINOSHITA					92W070				
DIST. ADM.	R.Q. ANDERSON					CONTRACT NO.				
		DATE	REVISION	BY	APP'D					

PROGRAM DEVELOPMENT DIVISION

APPROVED

Washington State Department of Transportation

HDR ENGINEERING INC.

ANNE SYMONDS & ASSOC., INC.
CONSULTING ENGINEERS

SR 405
NORTHUP TO BOTHELL
HOV AND SC&DI - STAGE 1

DRAINAGE PLAN

DR22

SHEET 78 OF 474 SHEETS

2:00AM 1"=50' 7/2/92

MP16.06 to MP22.50 068890

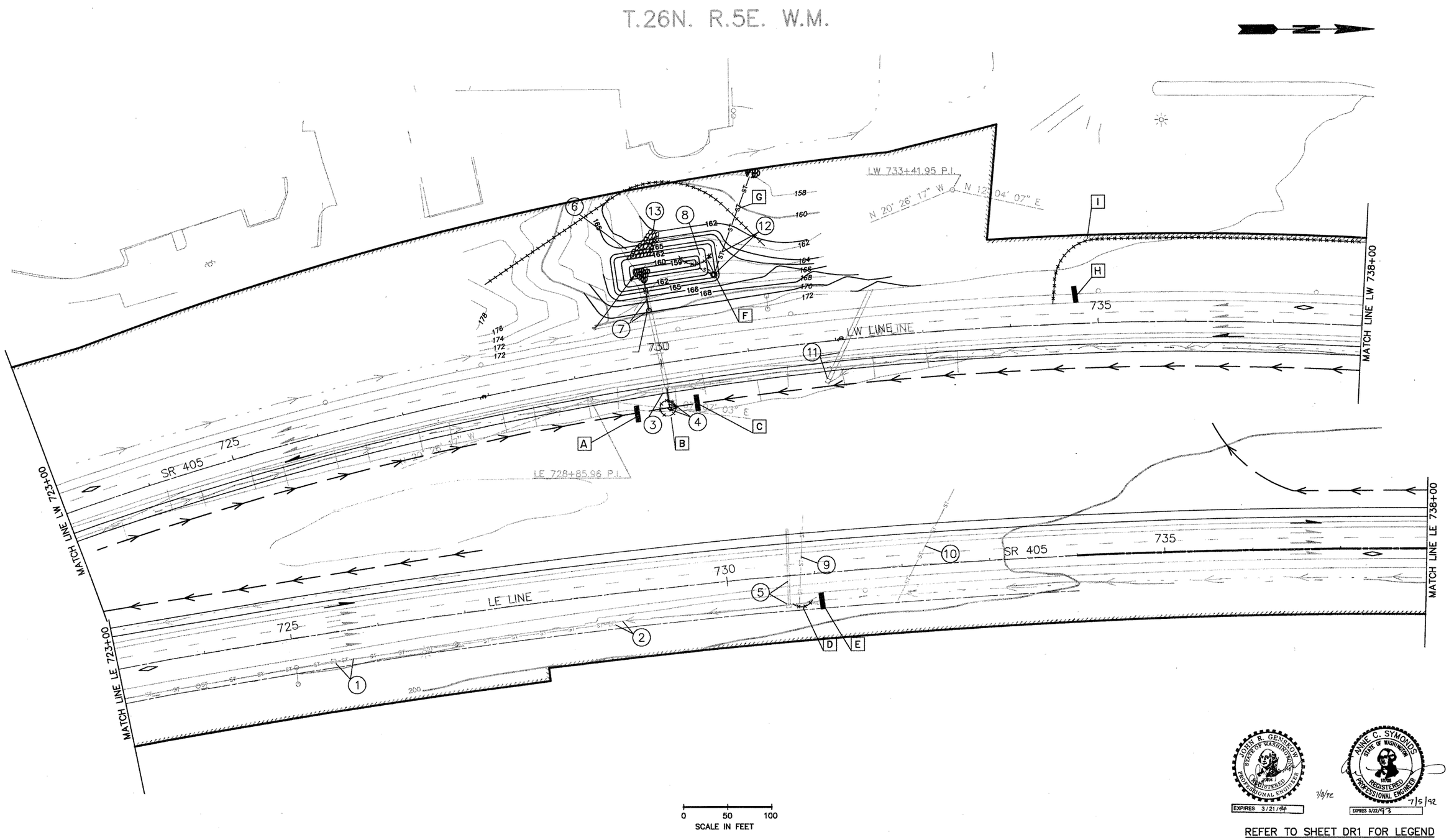

JOHN R. GENSKOW — STATE OF WASHINGTON — REGISTERED PROFESSIONAL ENGINEER — EXPIRES 3/21/94 — 7/8/92

ANNE C. SYMONDS — STATE OF WASHINGTON — REGISTERED PROFESSIONAL ENGINEER — EXPIRES 3/22/93 — 7/5/92

REFER TO SHEET DR1 FOR LEGEND

DESIGNED B.A./C.R.	5/92				
DRAWN M.S., M.T.F.	5/92				
REVIEWED A.C.S.	6/92				
PROJ. ENGR. R. KINOSHITA					
DIST. ADM. R.Q. ANDERSON					
	DATE	REVISION	BY	APP'D	

REGION NO.	STATE	FED. AID PROJ. NO.	SHEET NO.	TOTAL SHEETS
10	WASH	I-IM-405-3(791)		
JOB NUMBER 92W070				
CONTRACT NO.				

PROGRAM DEVELOPMENT DIVISION

APPROVED

Washington State Department of Transportation

HDR ENGINEERING INC.

ANNE SYMONDS & ASSOC., INC. CONSULTING ENGINEERS

SR 405
NORTHUP TO BOTHELL
HOV AND SC&DI - STAGE 1

DRAINAGE PLAN

DR23

SHEET 79 OF 474 SHEETS

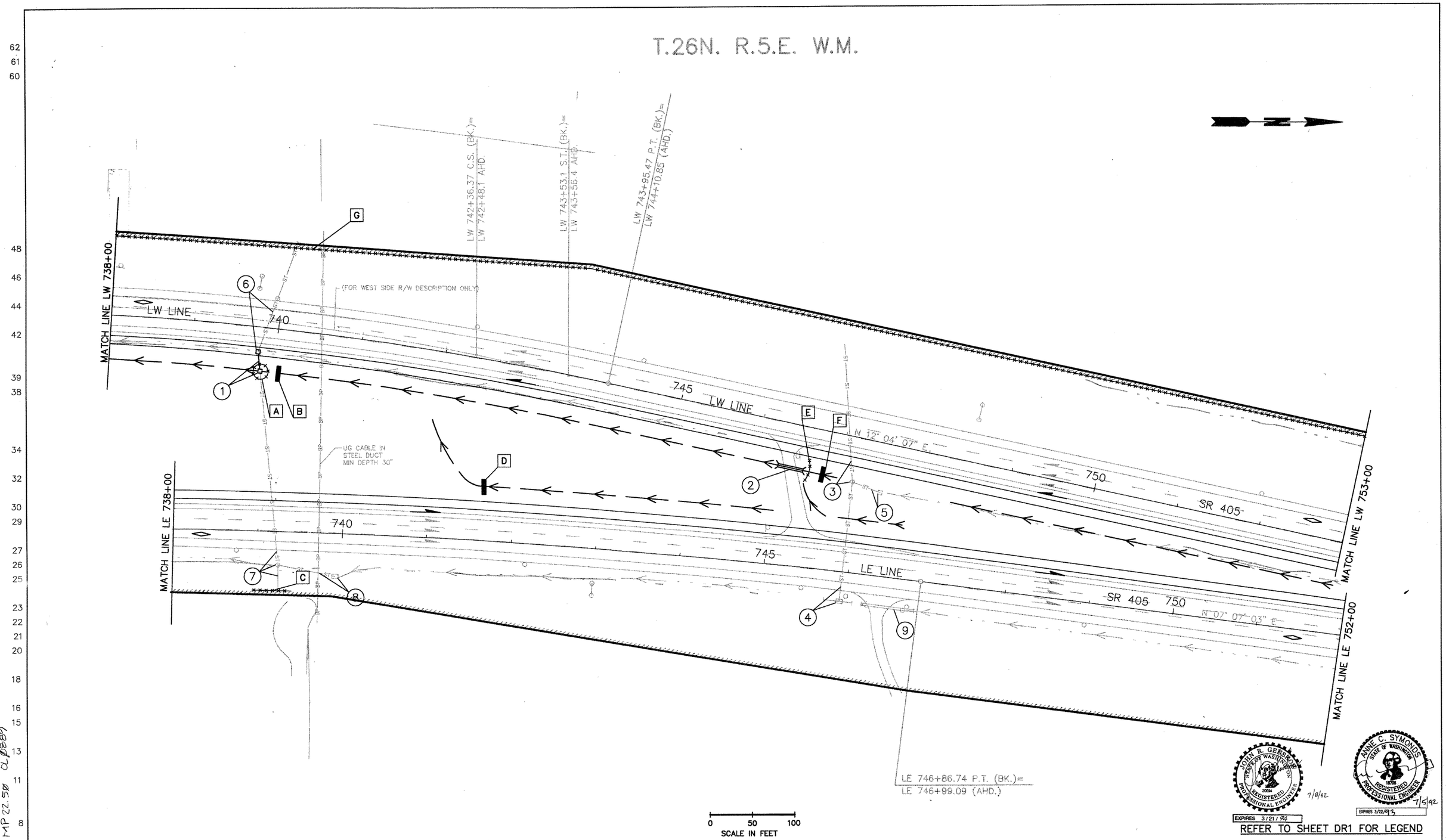

REFER TO SHEET DR1 FOR LEGEND

DESIGNED B.A./C.R.	5/92				REGION NO. 10	STATE WASH	FED. AID PROJ. NO. I-IM-405-3(791)	SHEET NO.	TOTAL SHEETS	PROGRAM DEVELOPMENT DIVISION
DRAWN M.S., M.T.F.	5/92				JOB NUMBER 92W070					
REVIEWED A.C.S.	6/92				CONTRACT NO.					APPROVED
PROJ. ENGR. R. KINOSHITA										
DIST. ADM. R.Q. ANDERSON										
	DATE	REVISION	BY	APP'D						

Washington State Department of Transportation

HDR ENGINEERING INC.

ANNE SYMONDS & ASSOC., INC. CONSULTING ENGINEERS

SR 405
NORTHUP TO BOTHELL
HOV AND SC&DI - STAGE 1

DRAINAGE PLAN

DR24

SHEET 80 OF 474 SHEETS

JOHN R. GERSKOVICH STATE OF WASHINGTON 20594 REGISTERED PROFESSIONAL ENGINEER 7/8/92 EXPIRES 3/21/93

ANNE C. SYMONDS STATE OF WASHINGTON 18706 REGISTERED PROFESSIONAL ENGINEER 7/5/92 EXPIRES 3/22/93

2:00AM 7/2/92 1405N-24.DWG 1"=50'

HOV LANES - STAGE 1 MP 16.06 to MP 22.50 ALP889

T.26N. R.5E. W.M.

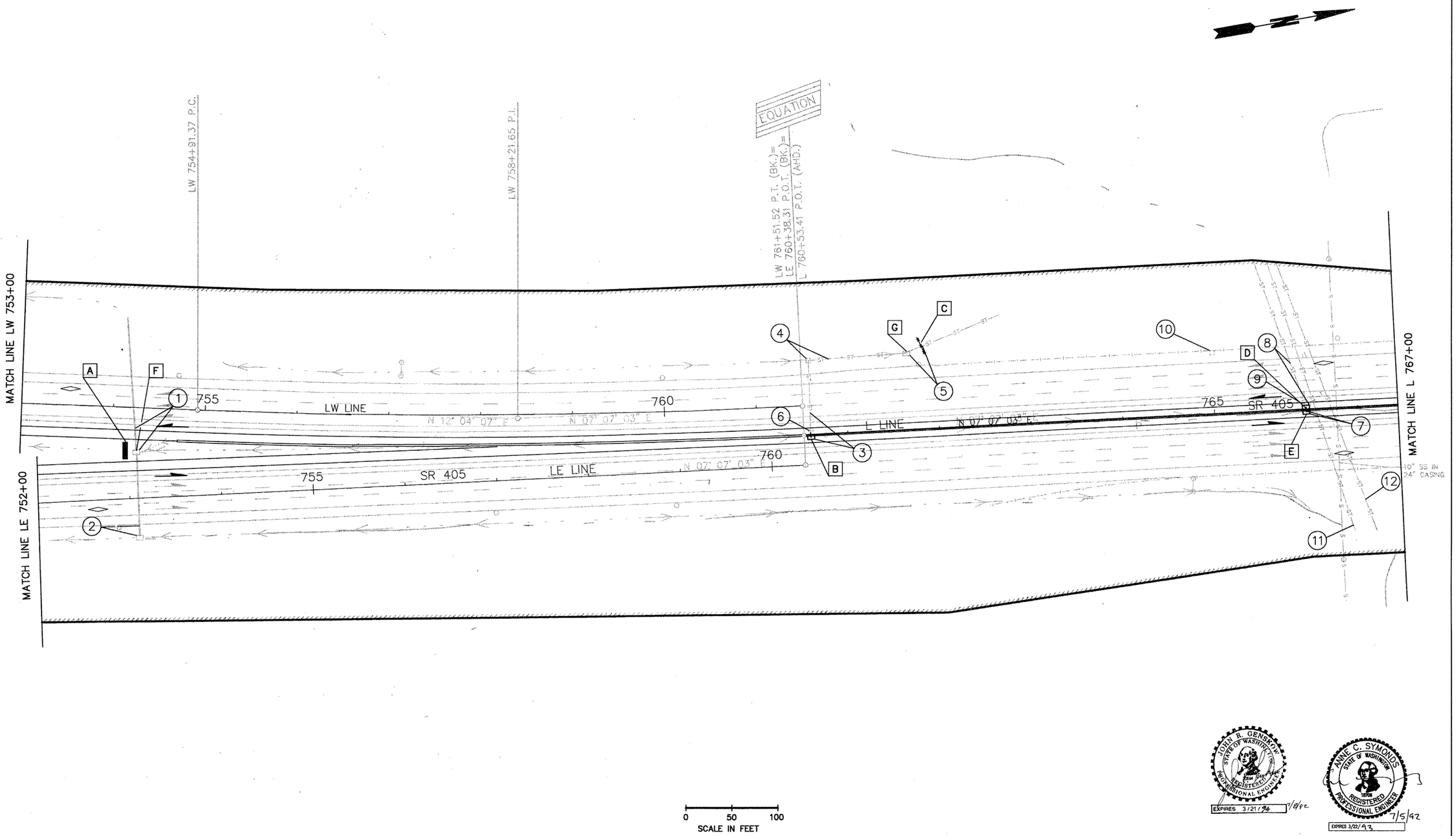

REFER TO SHEET DR1 FOR LEGEND

DESIGNED B.A./C.R.	5/92				REGION NO.	STATE	FED. AID PROJ. NO.	SHEET NO.	TOTAL SHEETS	PROGRAM DEVELOPMENT DIVISION
DRAWN M.S., M.T.F.	5/92				10	WASH	I-IM-405-3(791)			
REVIEWED A.C.S.	6/92				JOB NUMBER 92W070					
PROJ. ENGR. R. KINOSHITA					CONTRACT NO.					APPROVED
DIST. ADM. R.Q. ANDERSON										
	DATE	REVISION	BY	APP'D						

Washington State Department of Transportation

HDR ENGINEERING INC.

ANNE SYMONDS & ASSOC., INC. CONSULTING ENGINEERS

SR 405
NORTHUP TO BOTHELL
HOV AND SC&DI - STAGE 1

DRAINAGE PLAN

DR25

SHEET 81 OF 474 SHEETS

T.26N. R.5E. W.M.

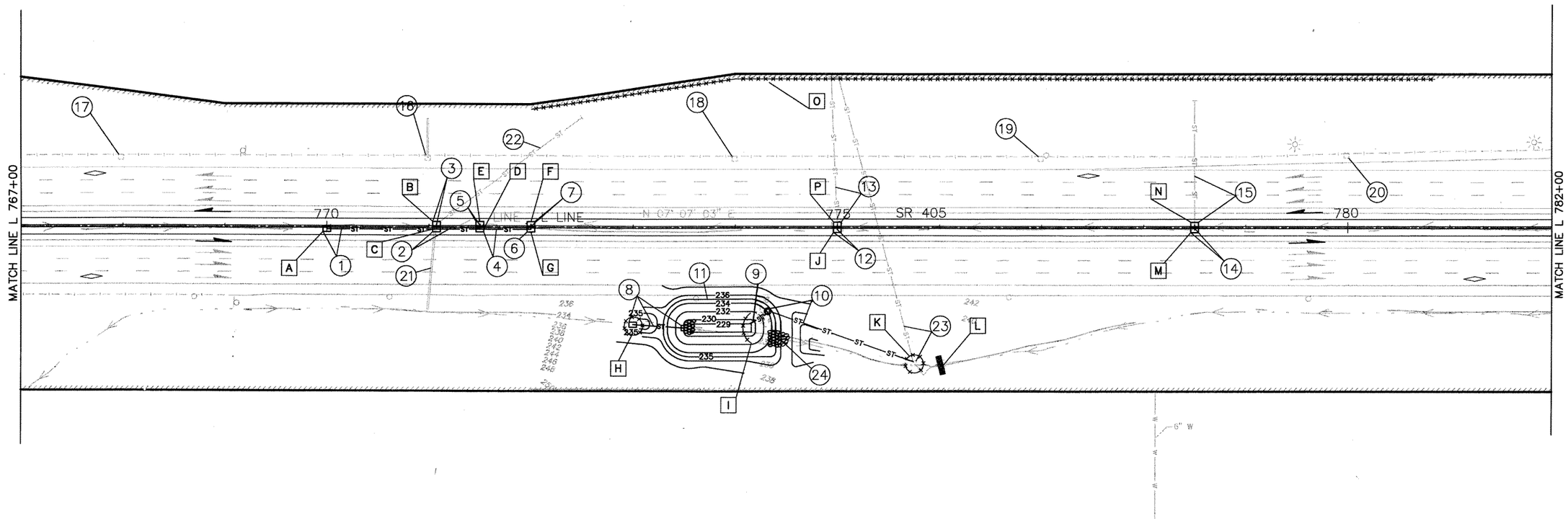

0 50 100
SCALE IN FEET

REFER TO SHEET DR1 FOR LEGEND

DESIGNED B.A./C.R.	5/92				REGION NO.	STATE	FED. AID PROJ. NO.	SHEET NO.	TOTAL SHEETS	PROGRAM DEVELOPMENT DIVISION
DRAWN M.S., M.T.F.	5/92				10	WASH				
REVIEWED A.C.S.	6/92				JOB NUMBER		I-IM-405-3(791)			
PROJ. ENGR. R. KINOSHITA					92W070					
DIST. ADM. R.Q. ANDERSON					CONTRACT NO.					APPROVED
	DATE	REVISION	BY	APP'D						

Washington State Department of Transportation

HDR ENGINEERING INC.

ANNE SYMONDS & ASSOC., INC.
CONSULTING ENGINEERS

SR 405
NORTHUP TO BOTHELL
HOV AND SC&DI - STAGE 1

DRAINAGE PLAN

DR26

SHEET 82 OF 474 SHEETS

HOV LANES - STAGE 1
MP 16.06 to MP22.50 OL0069

T.26N. R.5E. W.M.

END OF I-IM-405-3(791)
END OF PROJECT
STA. L 796+25.30 P.O.C.
M P 22.50

MATCH LINE L 782+00

SR 405 785 L LINE

L 786+52.30 P.C.

L 789+00 EXISTING LANE TRANSITION

L 792+71.30 P.I.

L 794+92.30 P.O.C.

BKYD-S LINE

N-BKYD LINE N 06°41'43" E

N 00°56'03" E

N 02°07'03"

790

795

L 795+00.00 P.O.C.(76.43' RT.) = N-BKYD 95+07.67 P.O.T.

N-BKYD 96+57.44 P.O.C.

SCALE IN FEET: 0 50 100

REFER TO SHEET DR1 FOR LEGEND

DESIGNED	B.A./C.R.	5/92				REGION NO.	STATE	FED. AID PROJ. NO.	SHEET NO.	TOTAL SHEETS	PROGRAM DEVELOPMENT DIVISION
DRAWN	M.S., M.T.F.	5/92				10	WASH	I-IM-405-3(791)			
REVIEWED	A.C.S.	6/92				JOB NUMBER 92W070					
PROJ. ENGR.	R. KINOSHITA					CONTRACT NO.					APPROVED
DIST. ADM.	R.Q. ANDERSON										
		DATE	REVISION	BY	APP'D						

Washington State Department of Transportation

HDR ENGINEERING INC.

ANNE SYMONDS & ASSOC., INC. CONSULTING ENGINEERS

SR 405
NORTHUP TO BOTHELL
HOV AND SC&DI - STAGE 1

DRAINAGE PLAN

DR27

SHEET 83 OF 474 SHEETS

JOHN R. GENSKOW, STATE OF WASHINGTON, 19842, REGISTERED PROFESSIONAL ENGINEER, 7/8/92, EXPIRES 3/21/94

ANNIE C. SYMONDS, STATE OF WASHINGTON, 18706, REGISTERED PROFESSIONAL ENGINEER, 7/5/92, EXPIRES 3/22/93

2:00AM 7/2/92 1"=50' NORTHUP-27.DWG

HOV LANES - STAGE 1 MP 16.06 to MP 22.50 OL 1689

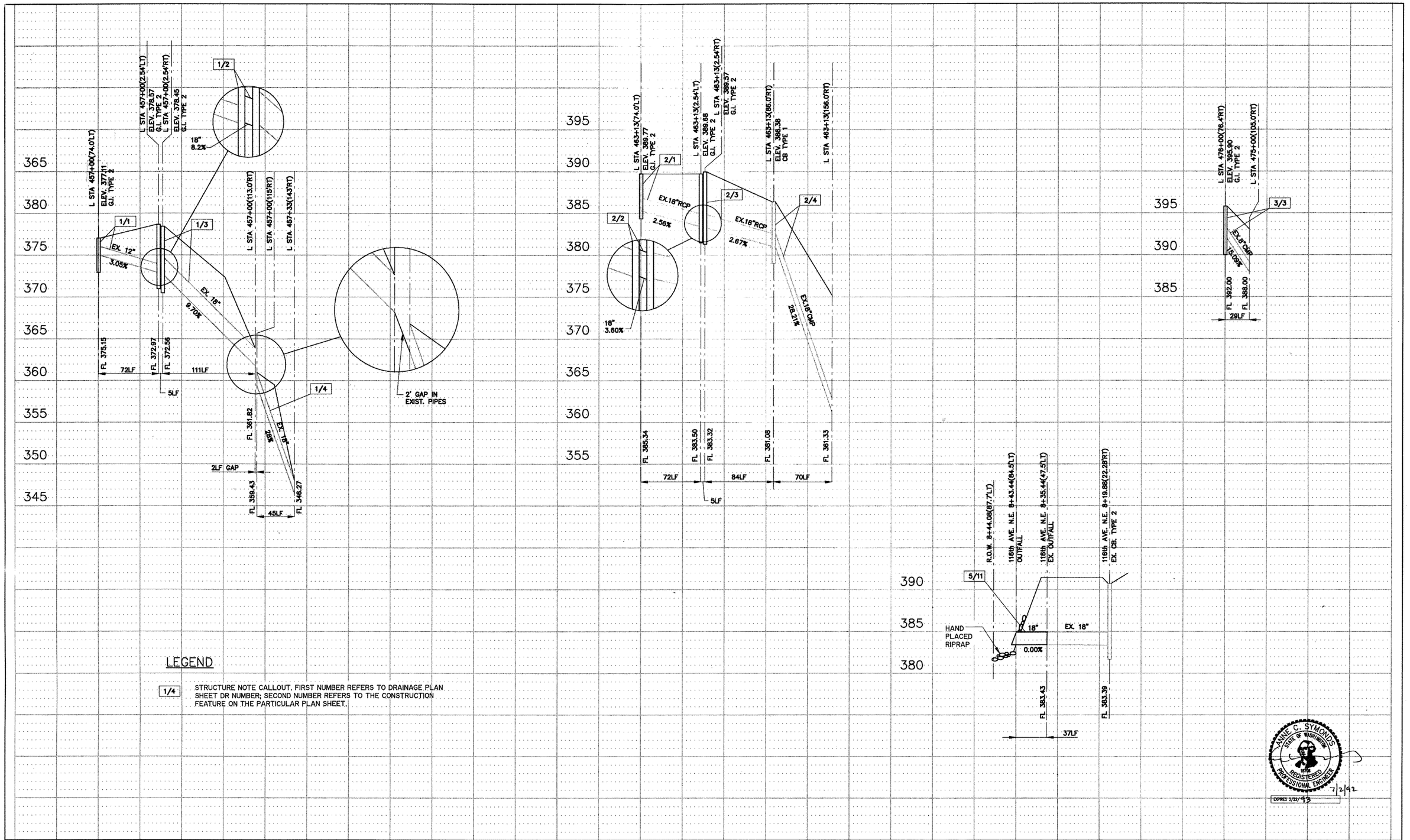

LEGEND

1/4 STRUCTURE NOTE CALLOUT. FIRST NUMBER REFERS TO DRAINAGE PLAN SHEET DR NUMBER; SECOND NUMBER REFERS TO THE CONSTRUCTION FEATURE ON THE PARTICULAR PLAN SHEET.

ANNE C. SYMONDS
STATE OF WASHINGTON
REGISTERED PROFESSIONAL ENGINEER
7/2/92
EXPIRES 3/22/93

DESIGNED	B.A./C.R.	5/92				REGION NO.	STATE	FED. AID PROJ. NO.	SHEET NO.	TOTAL SHEETS
DRAWN	G.F.M.	5/92				10	WASH			
REVIEWED	A.C.S.	6/92				JOB NUMBER 92W070		I-IM-405-3(791)		
PROJ. ENGR.	R. KINOSHITA					CONTRACT NO.				
DIST. ADM.	R.Q. ANDERSON									
		DATE	REVISION	BY	APP'D					

PROGRAM DEVELOPMENT DIVISION

APPROVED

Washington State Department of Transportation

HDR ENGINEERING INC.

ANNE SYMONDS & ASSOC., INC.
CONSULTING ENGINEERS

SR 405
NORTHUP TO BOTHELL
HOV AND SC&DI - STAGE 1

DRAINAGE PROFILE

DP1

SHEET 84 OF 474 SHEETS

HOV LANES - STAGE 1
MP 16.06 to MP 22.50 OL0087

7/2/92 9:30AM 1"=50'

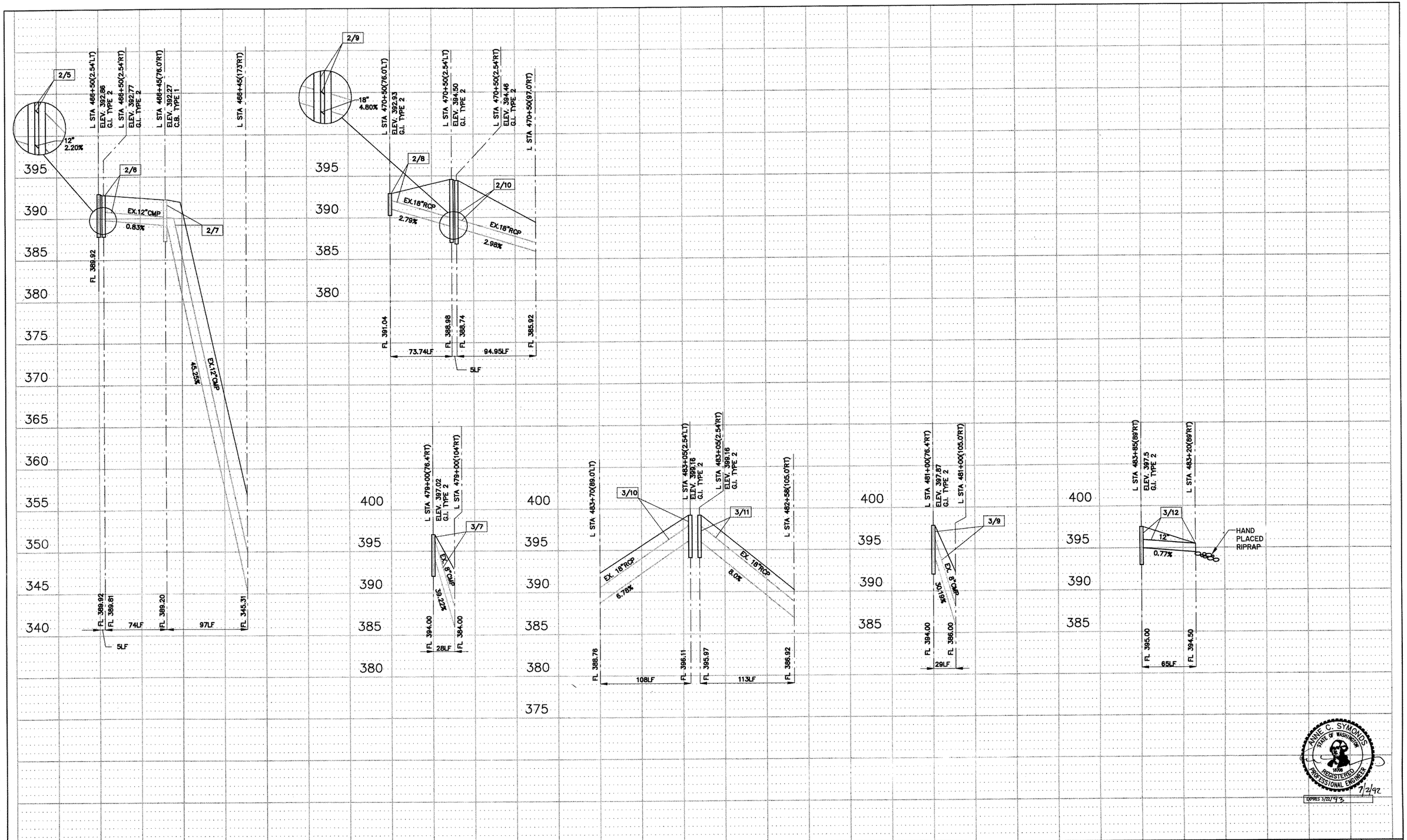

DESIGNED	B.A./C.R.	5/92	
DRAWN	G.F.M.	5/92	
REVIEWED	A.C.S.	6/92	
PROJ. ENGR.	R. KINOSHITA		
DIST. ADM.	R.Q. ANDERSON		
		DATE	REVISION / BY / APP'D

REGION NO.	STATE	FED. AID PROJ. NO.	SHEET NO.	TOTAL SHEETS
10	WASH	I-IM-405-3(791)		
JOB NUMBER 92W070				
CONTRACT NO.				

PROGRAM DEVELOPMENT DIVISION

APPROVED

Washington State Department of Transportation

HDR ENGINEERING INC.

ANNE SYMONDS & ASSOC., INC. CONSULTING ENGINEERS

SR 405
NORTHUP TO BOTHELL
HOV AND SC&DI - STAGE 1

DRAINAGE PROFILE

DP2

SHEET 85 OF 474 SHEETS

NORTHUP TO BOTHELL
HOV LANES - STAGE 1
MP 16.06 to MP 22.50 OL0889

7/1/92 9:30AM 1"=50'

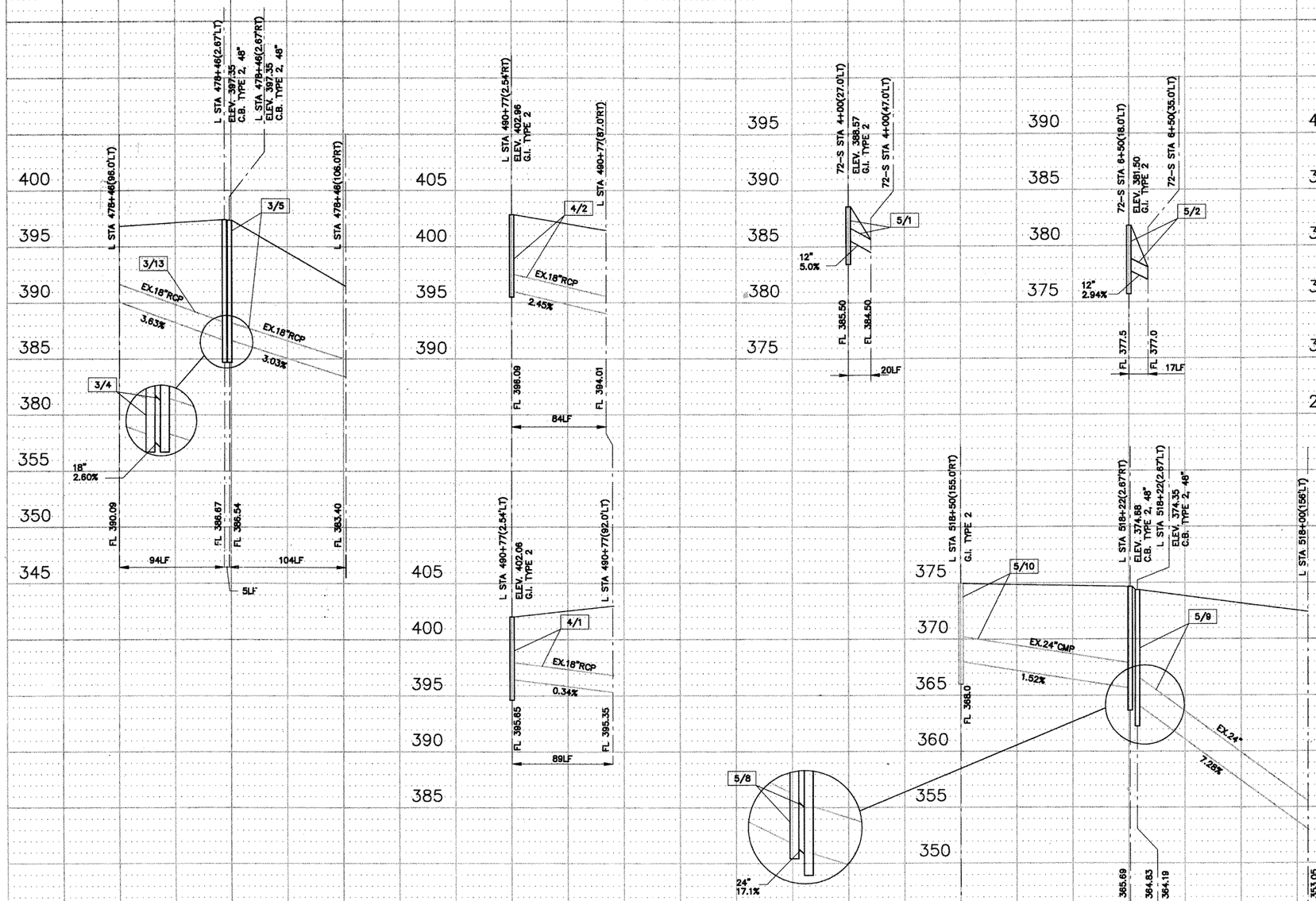

ANNE C. SYMONDS
STATE OF WASHINGTON
16708
REGISTERED
PROFESSIONAL ENGINEER
7/2/92
EXPIRES 3/22/93

DESIGNED B.A./C.R.	5/92				REGION NO.	STATE	FED. AID PROJ. NO.	SHEET NO.	TOTAL SHEETS	PROGRAM DEVELOPMENT DIVISION
DRAWN G.F.M.	5/92				10	WASH	I-IM-405-3(791)			
REVIEWED A.C.S.	6/92				JOB NUMBER 92W070					
PROJ. ENGR. R. KINOSHITA										
DIST. ADM. R.Q. ANDERSON					CONTRACT NO.					APPROVED
	DATE	REVISION	BY	APP'D						

Washington State Department of Transportation

HDR ENGINEERING INC.

ANNE SYMONDS & ASSOC., INC.
CONSULTING ENGINEERS

SR 405
NORTHUP TO BOTHELL
HOV AND SC&DI - STAGE 1

DRAINAGE PROFILE

DP3

SHEET 86 OF 474 SHEETS

HOV LANES - SOUTH
MP 16.06 to MP 22.50 STAGE 1
OL0882

7/1/92 9:30AM 1"=50'

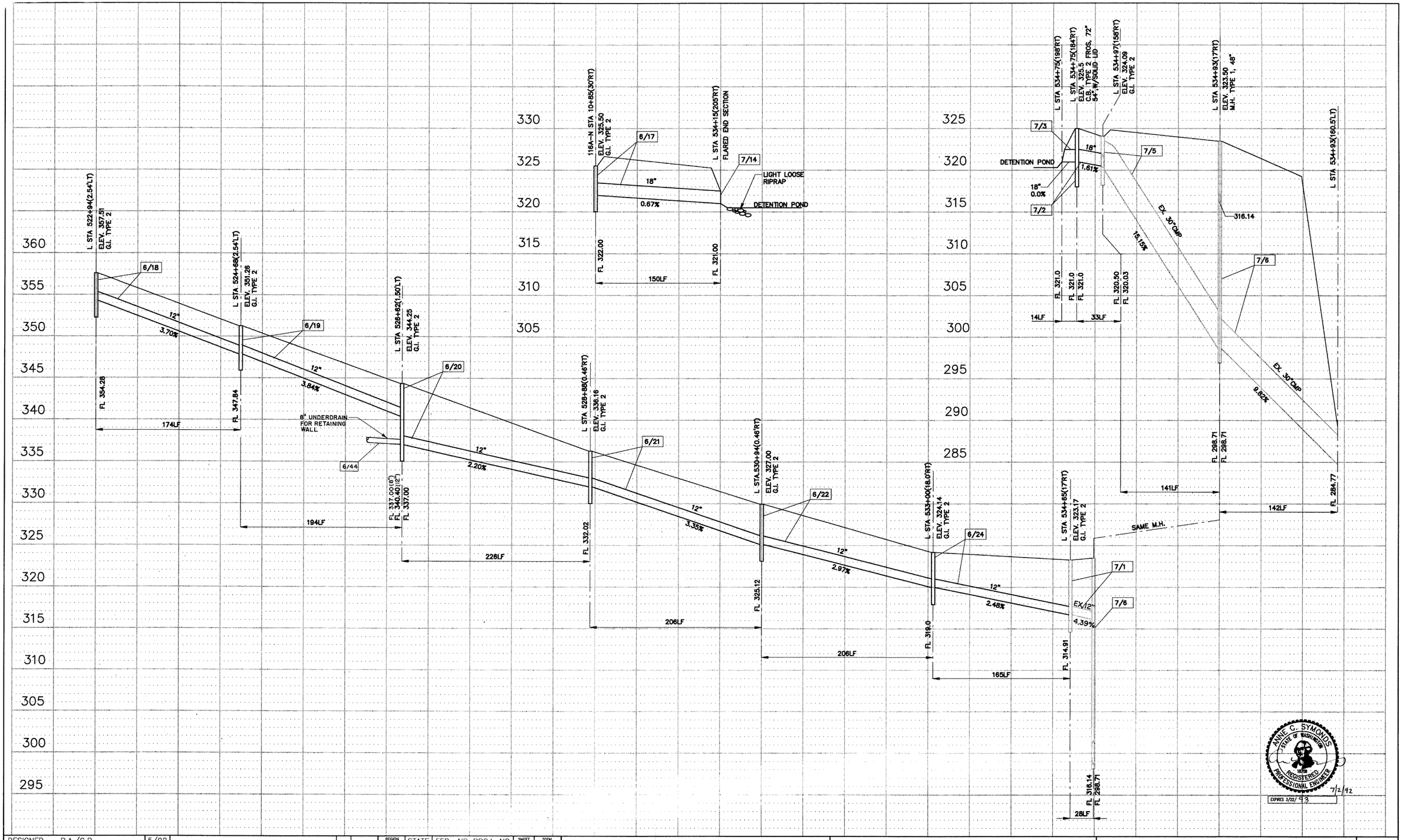

DESIGNED	B.A./C.R.	5/92				REGION NO.	STATE	FED. AID PROJ. NO.	SHEET NO.	TOTAL SHEETS
DRAWN	G.F.M.	5/92				10	WASH			
REVIEWED	A.C.S.	6/92				JOB NUMBER				
PROJ. ENGR.	R. KINOSHITA					92W070		I-IM-405-3(791)		
DIST. ADM.	R.Q. ANDERSON					CONTRACT NO.				
		DATE	REVISION	BY	APP'D					

PROGRAM DEVELOPMENT DIVISION

APPROVED

Washington State Department of Transportation

HDR ENGINEERING INC.

ANNE SYMONDS & ASSOC., INC.
CONSULTING ENGINEERS

SR 405
NORTHUP TO BOTHELL
HOV AND SC&DI - STAGE 1

DRAINAGE PROFILE

DP4

SHEET 87 OF 474 SHEETS

HOV LANES - STAGE 1
MP 16.06 to MP 22.50 OL0689

1"=50'

7/1/92

9:30AM

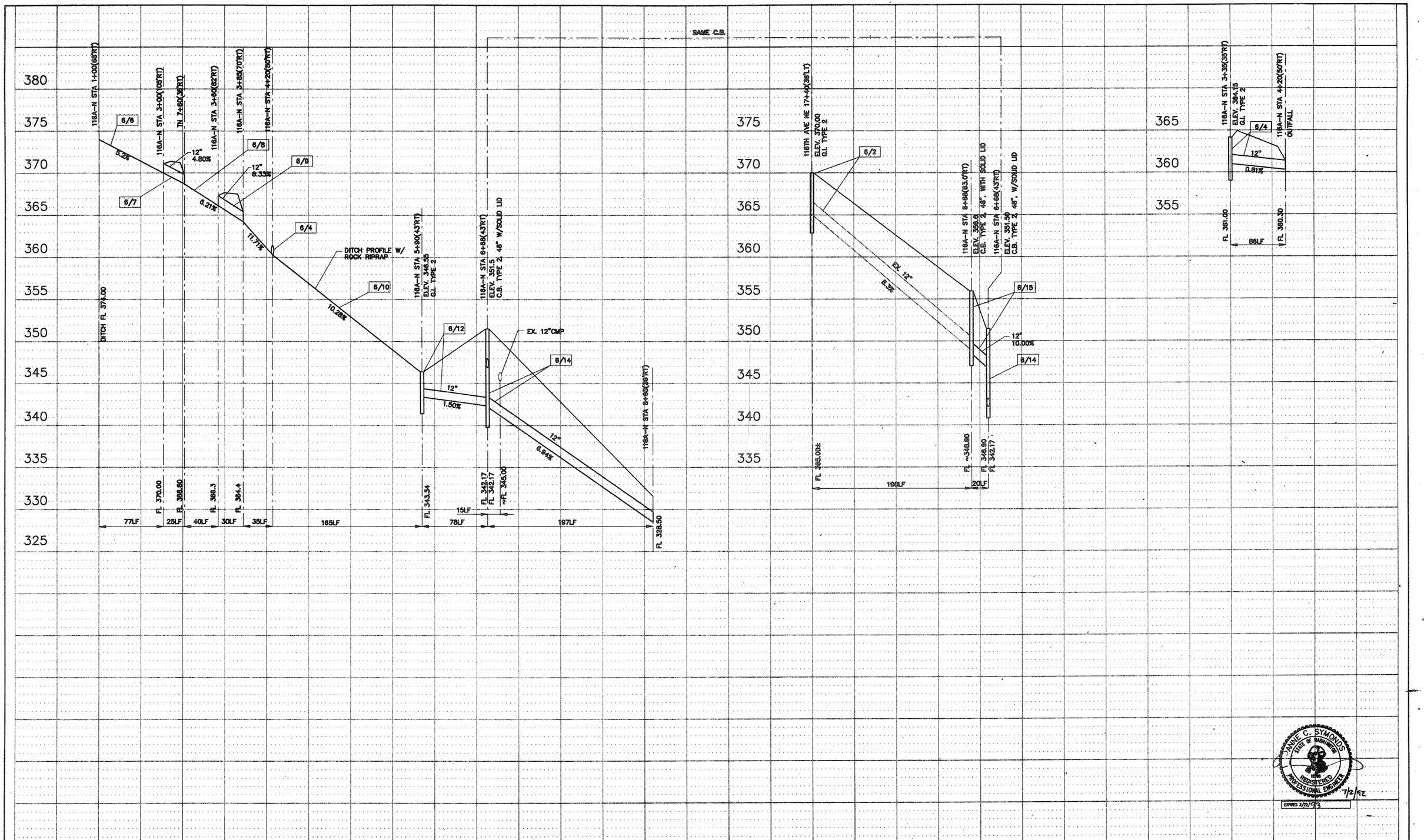

HOV LANES - STAGE 1
MP 16.06 to MP 22.50 OL0889

DESIGNED B.A./C.R.	5/92				REGION NO.	STATE	FED. AID PROJ. NO.	SHEET NO.	TOTAL SHEETS	PROGRAM DEVELOPMENT DIVISION	Washington State Department of Transportation	SR 405 NORTHUP TO BOTHELL HOV AND SC&DI - STAGE 1	DP5
DRAWN G.F.M.	5/92				10	WASH							SHEET 88 OF 474 SHEETS
REVIEWED A.C.S.	6/92				JOB NUMBER 92W070		I-IM-405-3(791)				HDR ENGINEERING INC. ANNE SYMONDS & ASSOC., INC. CONSULTING ENGINEERS	DRAINAGE PROFILE	
PROJ. ENGR. R. KINOSHITA													
DIST. ADM. R.Q. ANDERSON					CONTRACT NO.					APPROVED			
	DATE	REVISION	BY	APP'D									

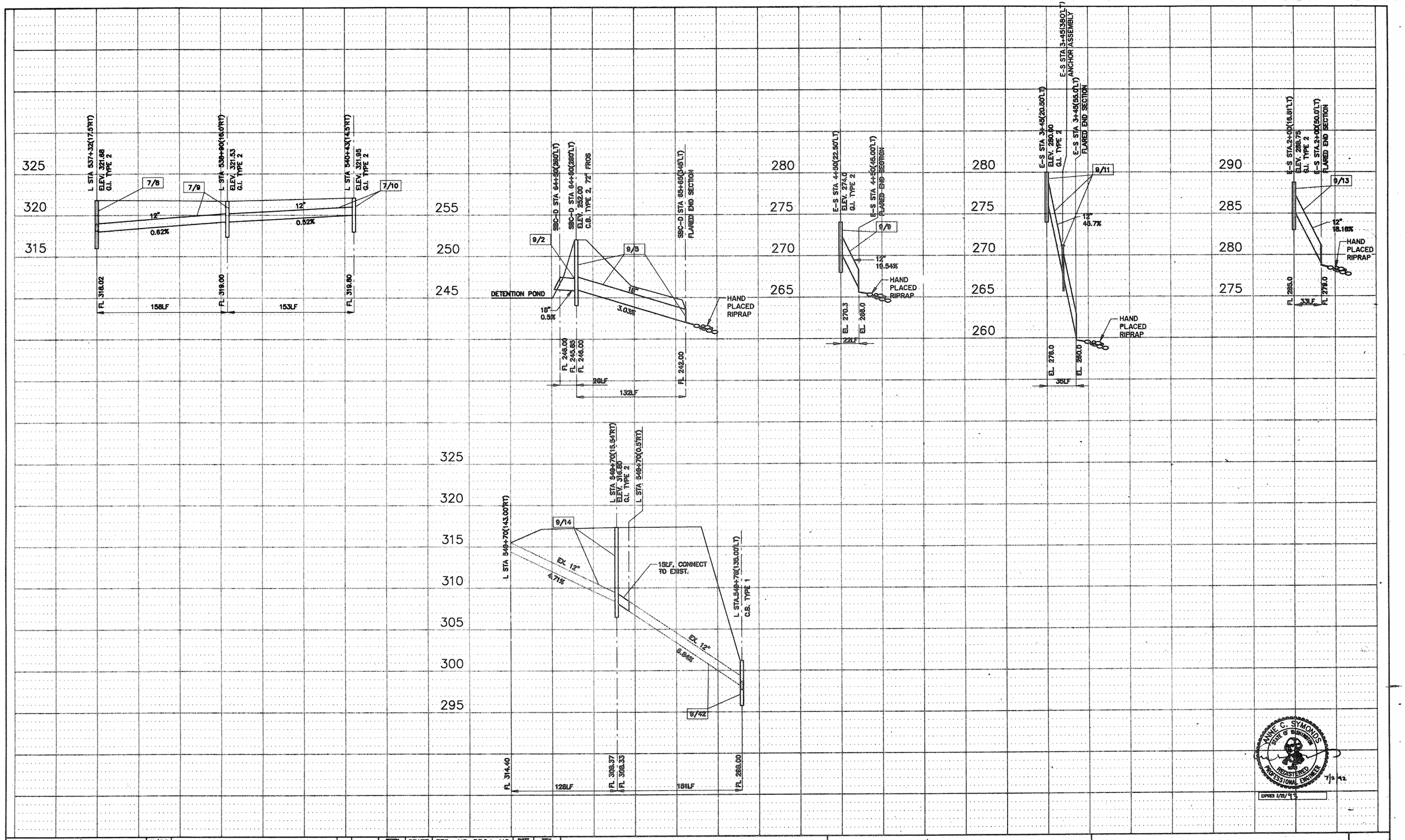

DESIGNED B.A./C.R.	5/92				REGION NO. 10	STATE WASH	FED. AID PROJ. NO. I-IM-405-3(791)	SHEET NO.	TOTAL SHEETS
DRAWN G.F.M.	5/92				JOB NUMBER 92W070				
REVIEWED A.C.S.	6/92				CONTRACT NO.				
PROJ. ENGR. R. KINOSHITA									
DIST. ADM. R.Q. ANDERSON									
	DATE	REVISION	BY	APP'D					

PROGRAM DEVELOPMENT DIVISION

APPROVED

Washington State Department of Transportation

HDR ENGINEERING INC.

ANNE SYMONDS & ASSOC., INC. CONSULTING ENGINEERS

SR 405
NORTHUP TO BOTHELL
HOV AND SC&DI - STAGE 1

DRAINAGE PROFILE

DP6

SHEET 89 OF 474 SHEETS

9:30AM 7/2/92 1"=50' 91025P06.DWG

NORTHRUP TO BOTHELL
HOV LANES - STAGE 1
MP 16.06 to MP 22.50 OL 0889

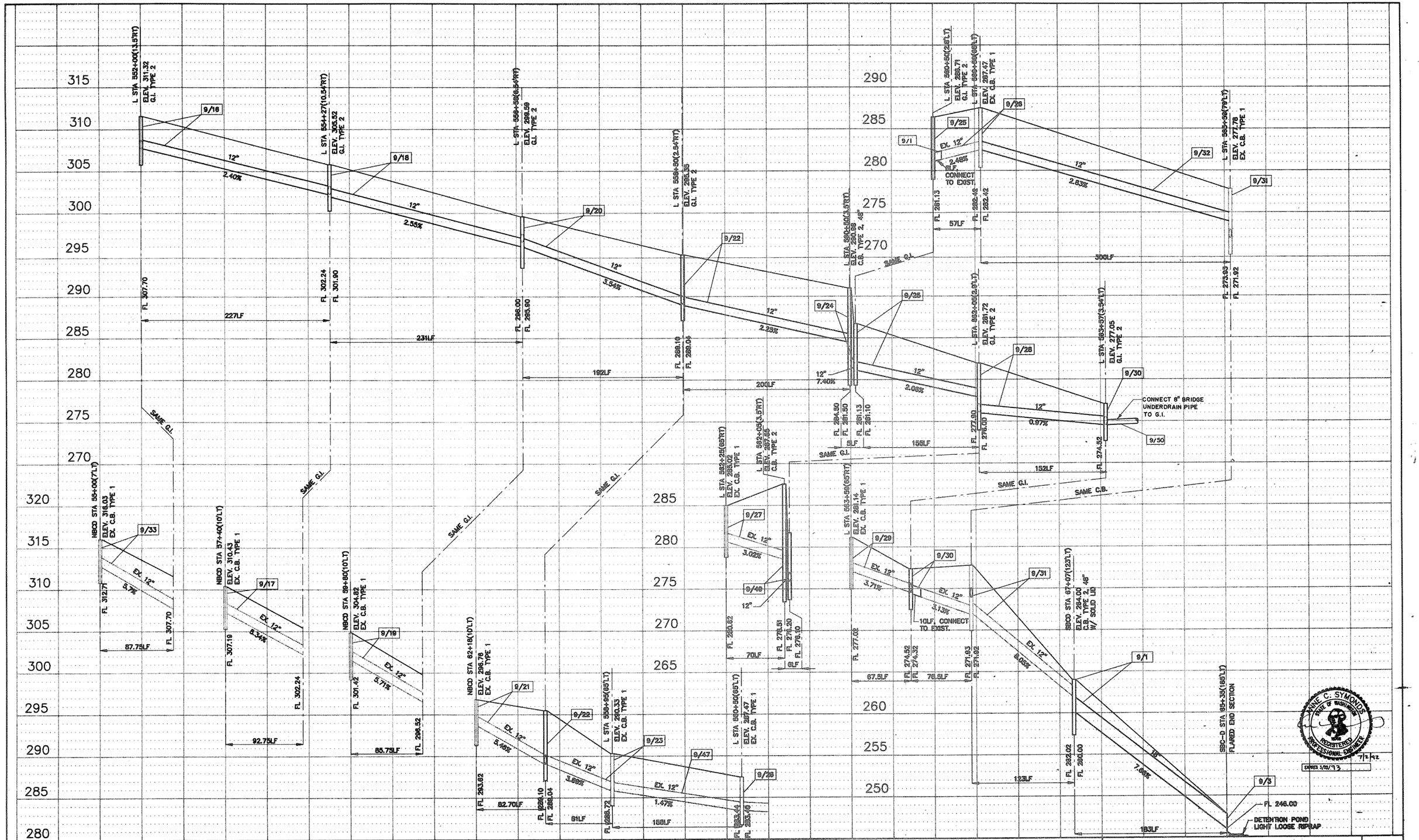

DESIGNED	B.A./C.R.	5/92				REGION NO.	STATE	FED. AID PROJ. NO.	SHEET NO.	TOTAL SHEETS
DRAWN	G.F.M.	5/92				10	WASH	I-IM-405-3(791)		
REVIEWED	A.C.S.	6/92				JOB NUMBER 92W070				
PROJ. ENGR.	R. KINOSHITA					CONTRACT NO.				
DIST. ADM.	R.Q. ANDERSON									
		DATE	REVISION	BY	APP'D					

PROGRAM DEVELOPMENT DIVISION

APPROVED

Washington State Department of Transportation

HDR ENGINEERING INC.

ANNE SYMONDS & ASSOC., INC.
CONSULTING ENGINEERS

SR 405
NORTHUP TO BOTHELL
HOV AND SC&DI - STAGE 1

DRAINAGE PROFILE

DP7

SHEET 90 OF 474 SHEETS

ANNE C. SYMONDS
STATE OF WASHINGTON
REGISTERED PROFESSIONAL ENGINEER
7/2/92
DATED 3/12/93

NORTHRUP TO BOTHELL
HOV LANES - STAGE 1
MP 16.06 to MP 22.50 CL0889

91025P07.DWG

7/1/92

9:30AM

1"=50'

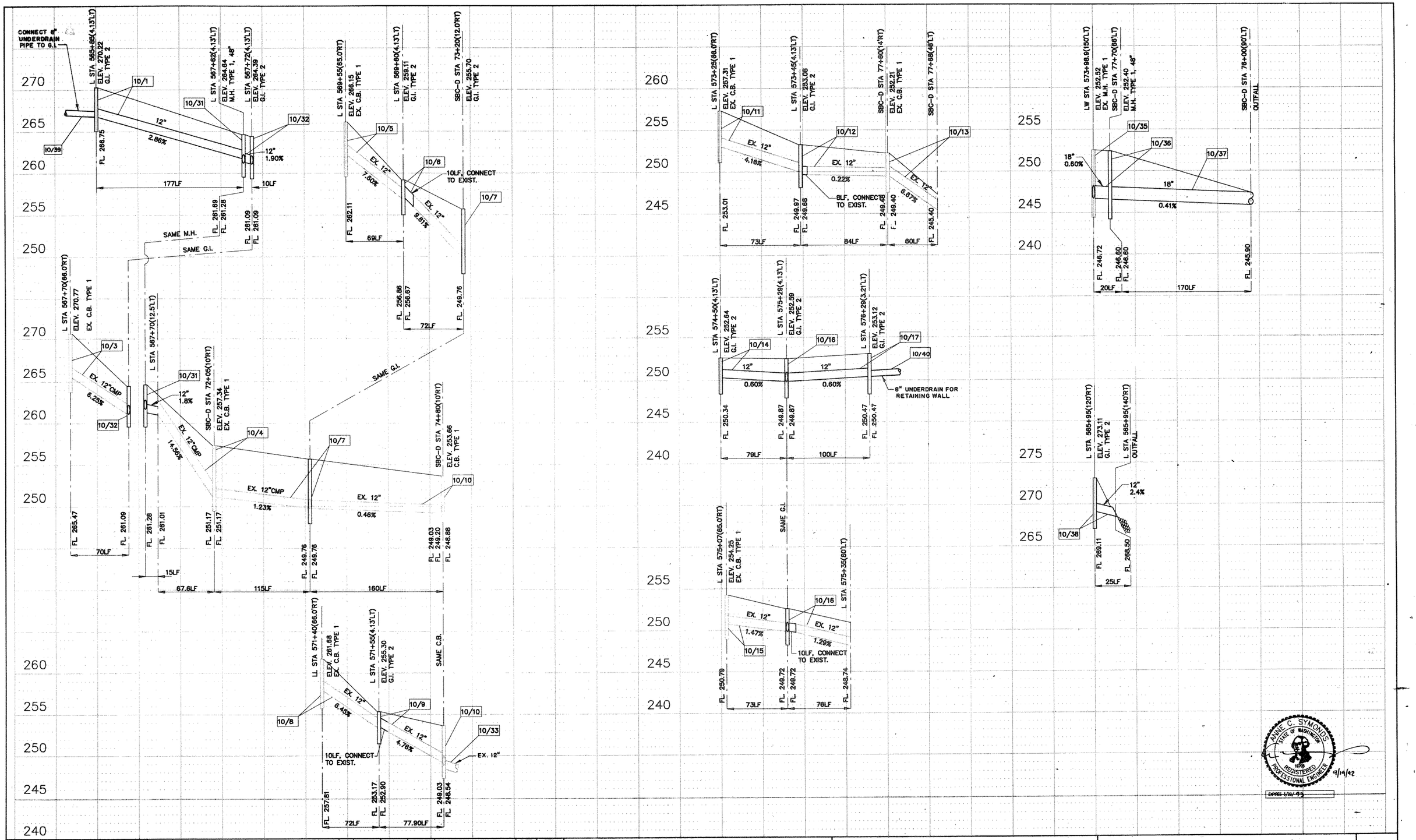

ANNE C. SYMONDS STATE OF WASHINGTON 16105 REGISTERED PROFESSIONAL ENGINEER 9/19/92
EXPIRES 1/26/93

DESIGNED B.A./C.R.	5/92				REGION NO.	STATE	FED. AID PROJ. NO.	SHEET NO.	TOTAL SHEETS	PROGRAM DEVELOPMENT DIVISION
DRAWN G.F.M.	5/92				10	WASH	I-IM-405-3(791)			
REVIEWED A.C.S.	6/92				JOB NUMBER 92W070					
PROJ. ENGR. R. KINOSHITA					CONTRACT NO.					APPROVED
DIST. ADM. R.Q. ANDERSON										
	DATE	REVISION	BY	APP'D						

Washington State Department of Transportation

HDR ENGINEERING INC. ANNE SYMONDS & ASSOC., INC. CONSULTING ENGINEERS

SR 405
NORTHRUP TO BOTHELL
HOV AND SC&DI - STAGE I

DRAINAGE PROFILE

DP8

SHEET 91 OF 474 SHEETS

91

9:30AM 9/17/92 1"=50' 91025P08.DWG

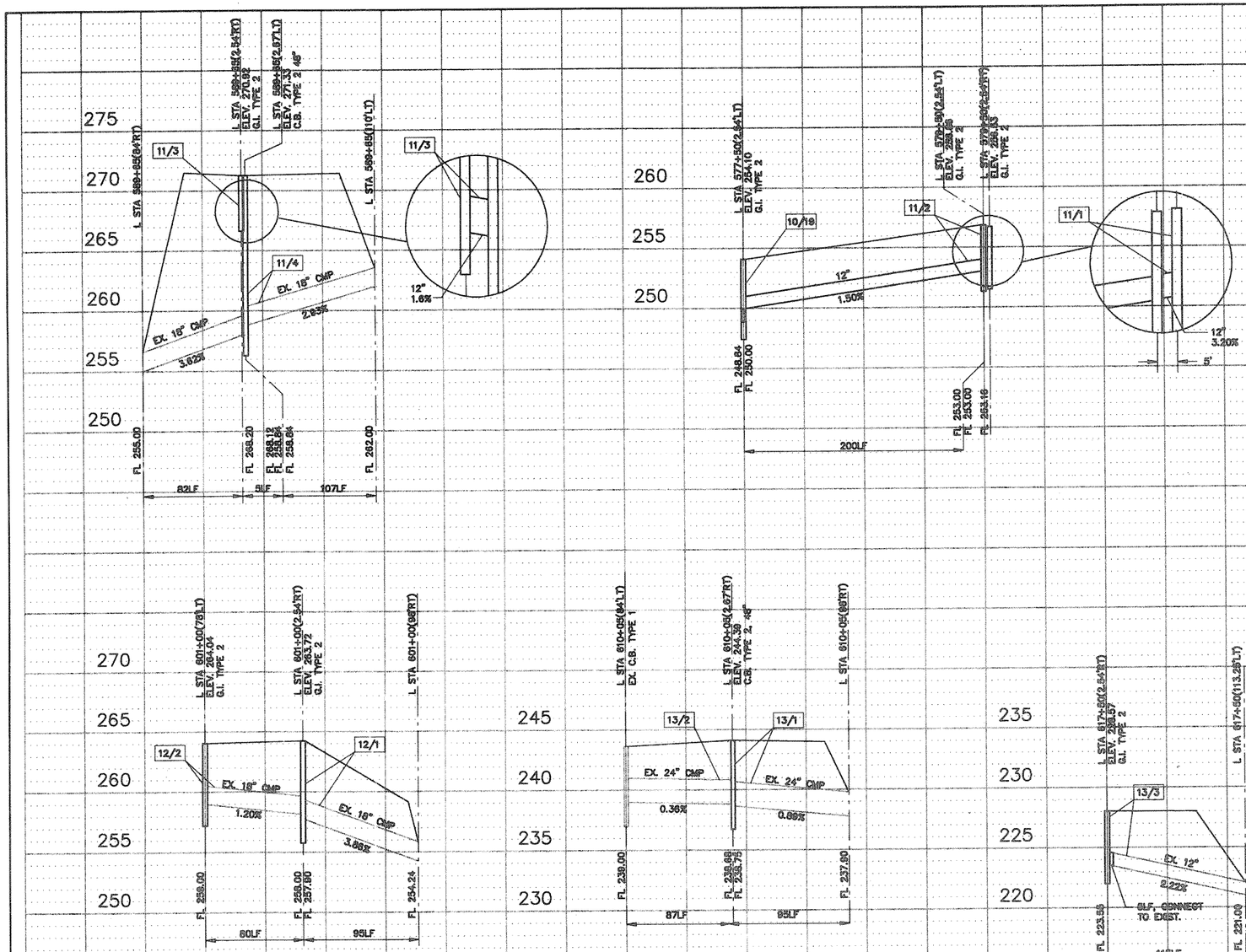

ANNE C. SYMONDS
STATE OF WASHINGTON
REGISTERED PROFESSIONAL ENGINEER
7/2/92
EXPIRES 3/12/93

NORTHRUP TO BOTHELL
HOV LANES - STAGE 1
MP 16.06 TO MP 22.50 (L0887)

9:30AM 7/2/92 1"=50' 91025P09.DWG

DESIGNED	B.A./C.R.	5/92	
DRAWN	G.F.M.	5/92	
REVIEWED	A.C.S.	6/92	
PROJ. ENGR.	R. KINOSHITA		
DIST. ADM.	R.Q. ANDERSON		
		DATE	REVISION / BY / APP'D

REGION NO.	STATE	FED. AID PROJ. NO.
10	WASH	I-IM-405-3(791)

JOB NUMBER 92W070
CONTRACT NO.

SHEET NO. / TOTAL SHEETS

PROGRAM DEVELOPMENT DIVISION

APPROVED

Washington State Department of Transportation

HDR ENGINEERING INC.

ANNE SYMONDS & ASSOC., INC.
CONSULTING ENGINEERS

SR 405
NORTHUP TO BOTHELL
HOV AND SC&DI - STAGE 1

DRAINAGE PROFILE

DP9

SHEET 92 OF 474 SHEETS

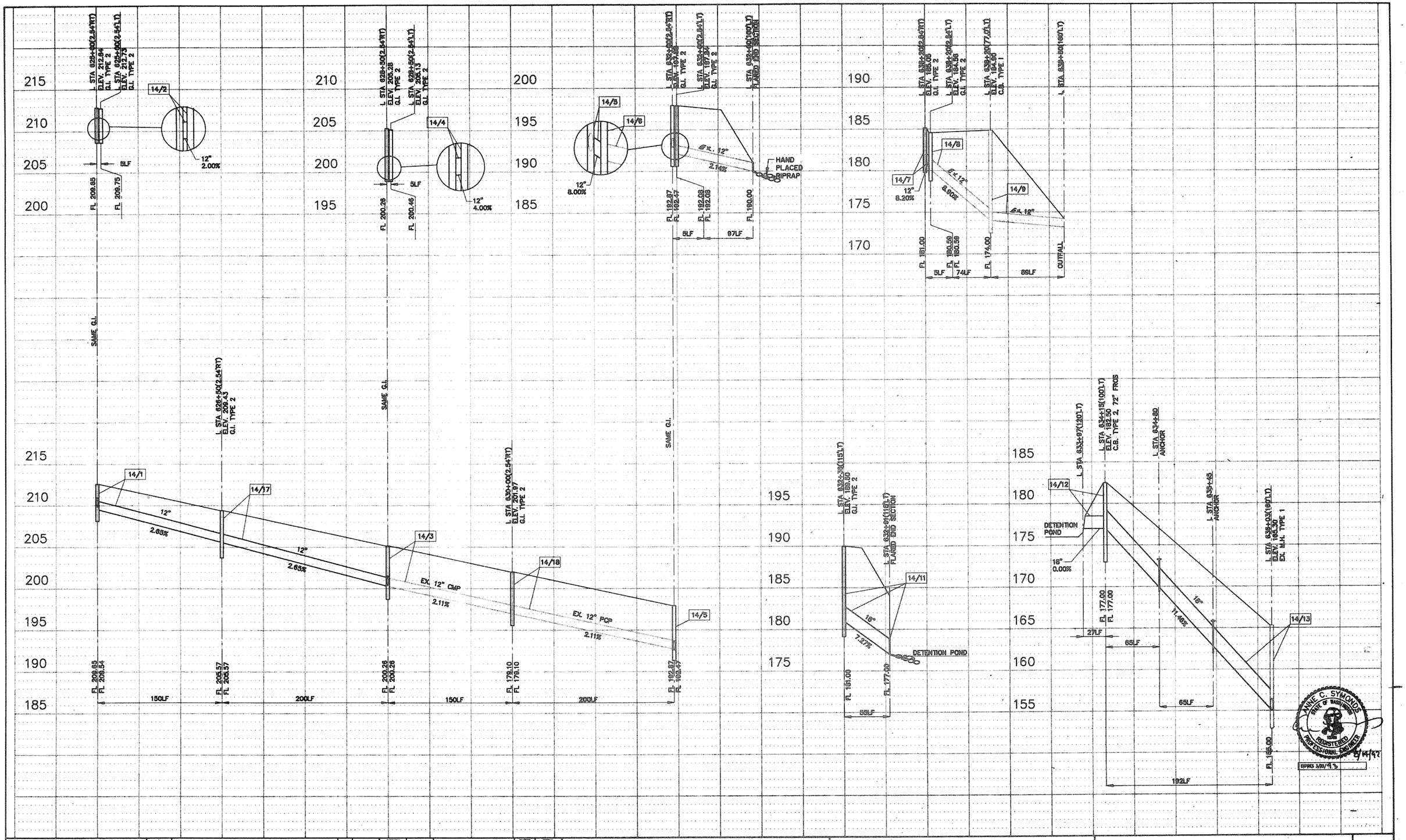

DESIGNED	B.A./C.R.	5/92				REGION NO.	STATE	FED. AID PROJ. NO.	SHEET NO.	TOTAL SHEETS
DRAWN	G.W.O.	5/92				10	WASH	I-IM-405-3(791)		
REVIEWED	A.C.S.	6/92				JOB NUMBER				
PROJ. ENGR.	R. KINOSHITA					92W070				
DIST. ADM.	R.Q. ANDERSON					CONTRACT NO.				
		DATE	REVISION	BY	APP'D					

PROGRAM DEVELOPMENT DIVISION

APPROVED

Washington State Department of Transportation

HDR ENGINEERING INC.

ANNE SYMONDS & ASSOC., INC.
CONSULTING ENGINEERS

SR 405
NORTHUP TO BOTHELL
HOV AND SC&DI - STAGE I

DRAINAGE PROFILE

DP10

SHEET 93 OF 474 SHEETS

11:45AM 8/14/92 91025P10.DWG 1"=50'

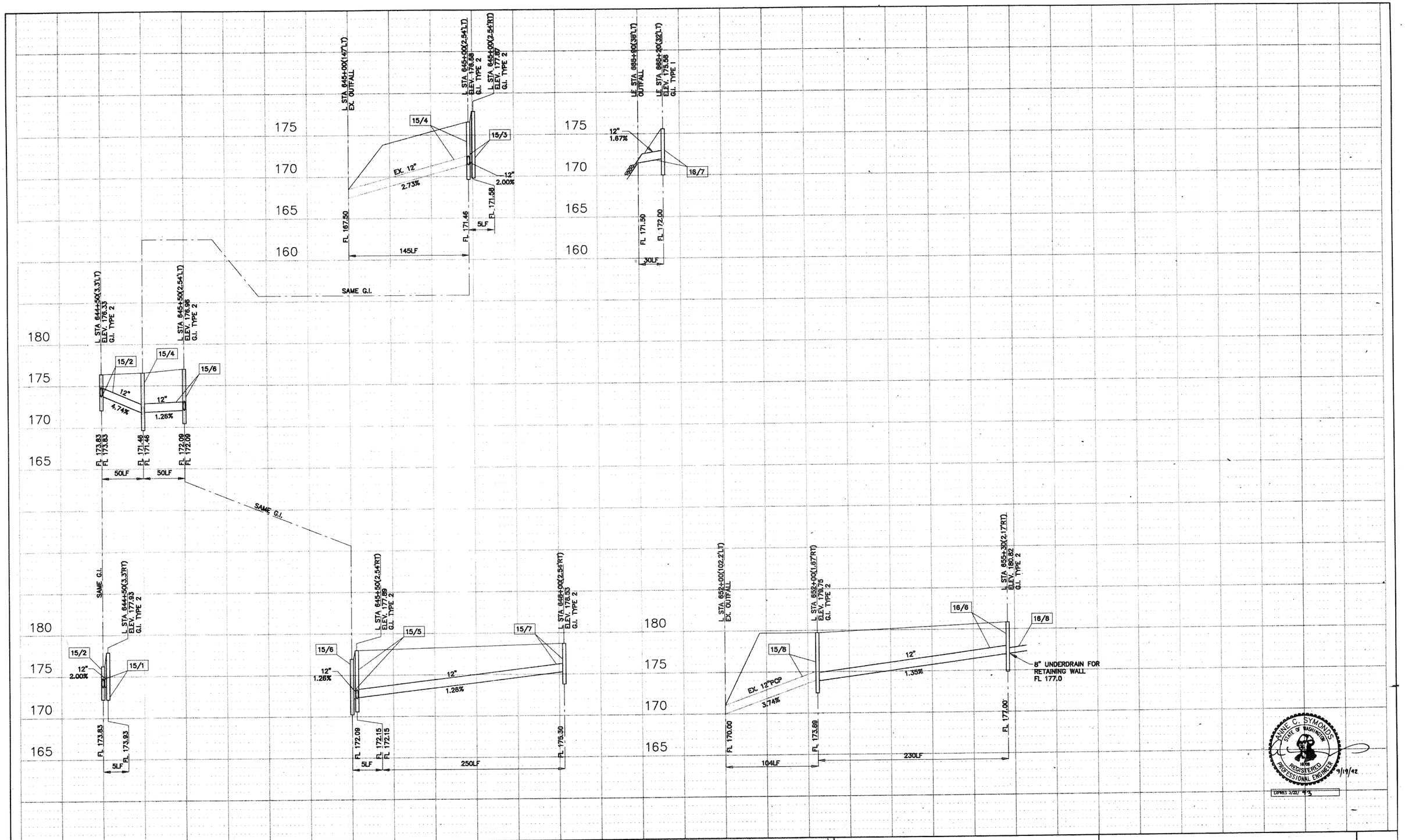

ANNE C. SYMONDS
STATE OF WASHINGTON
14700
REGISTERED
PROFESSIONAL ENGINEER
9/19/92
EXPIRES 3/22/93

DESIGNED B.A./C.R.	5/92				REGION NO.	STATE	FED. AID PROJ. NO.	SHEET NO.	TOTAL SHEETS	PROGRAM DEVELOPMENT DIVISION
DRAWN G.W.O.	5/92				10	WASH	I-IM-405-3(791)			
REVIEWED A.C.S.	6/92				JOB NUMBER 92W070					
PROJ. ENGR. R. KINOSHITA					CONTRACT NO.					APPROVED
DIST. ADM. R.Q. ANDERSON										
	DATE	REVISION	BY	APP'D						

Washington State Department of Transportation

HDR ENGINEERING INC.

ANNE SYMONDS & ASSOC., INC.
CONSULTING ENGINEERS

SR 405
NORTHRUP TO BOTHELL
HOV AND SC&DI - STAGE I

DRAINAGE PROFILE

DP11

SHEET 94 OF 474 SHEETS

9:30AM 1"=50' 9/19/92 91025P11.DWG

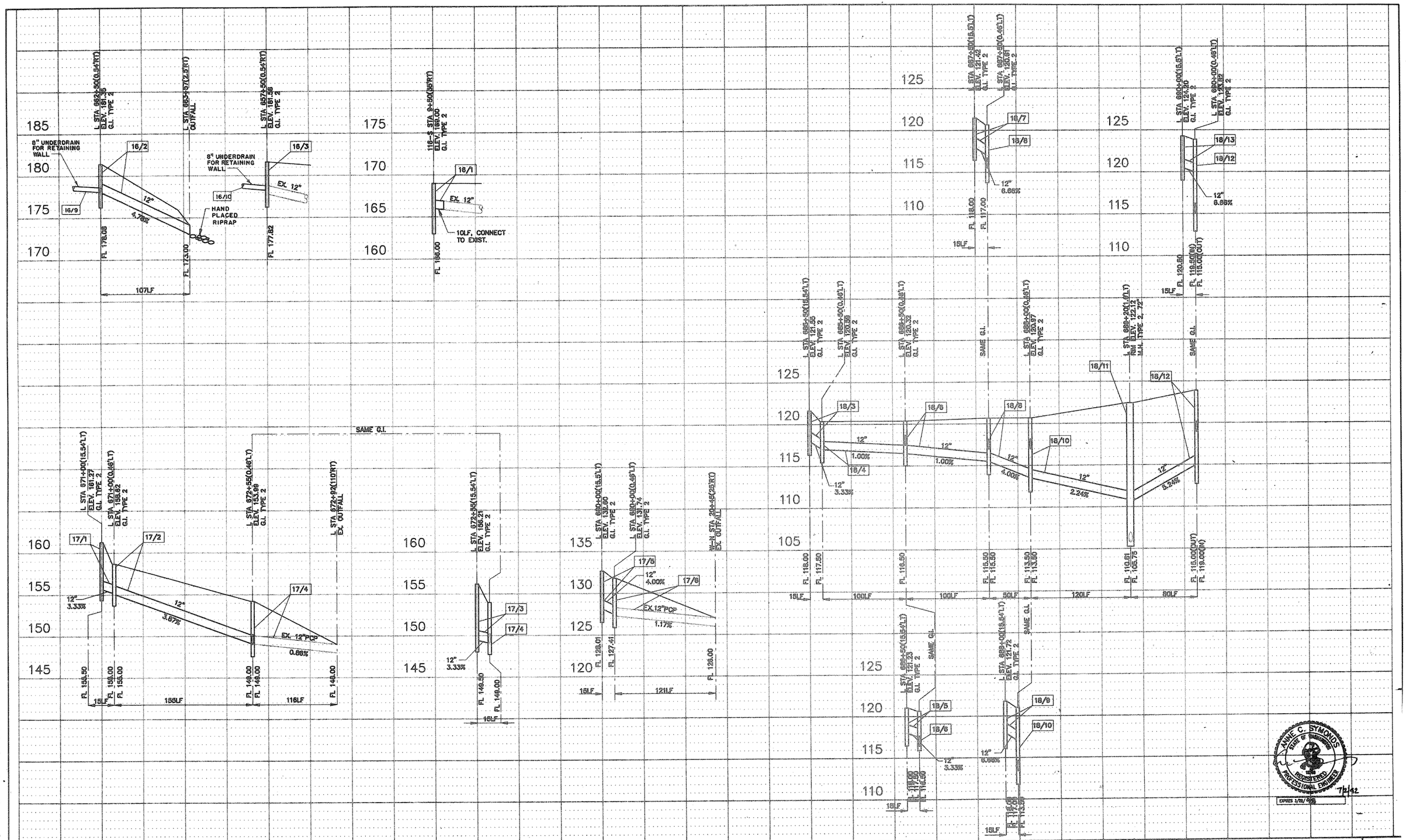

DESIGNED	B.A./C.R.	5/92				REGION NO.	STATE	FED. AID PROJ. NO.	SHEET NO.	TOTAL SHEETS
DRAWN	G.W.O.	5/92				10	WASH			
REVIEWED	A.C.S.	6/92				JOB NUMBER 92W070		I-IM-405-3(791)		
PROJ. ENGR.	R. KINOSHITA					CONTRACT NO.				
DIST. ADM.	R.Q. ANDERSON									
		DATE	REVISION	BY	APP'D					

PROGRAM DEVELOPMENT DIVISION

APPROVED

Washington State Department of Transportation

HDR ENGINEERING INC.

ANNE SYMONDS & ASSOC., INC. CONSULTING ENGINEERS

SR 405
NORTHGATE TO BOTHELL
HOV AND SCOUR - STAGE 1

DRAINAGE PROFILE

DP12

SHEET 95 OF 474 SHEETS

SR 405
NORTHGATE TO BOTHELL
HOV LANES - STAGE 1
MP 16.06 to MP 22.50

7/1/92 9:30AM 1"=50' 91025P12.DWG 0L0889

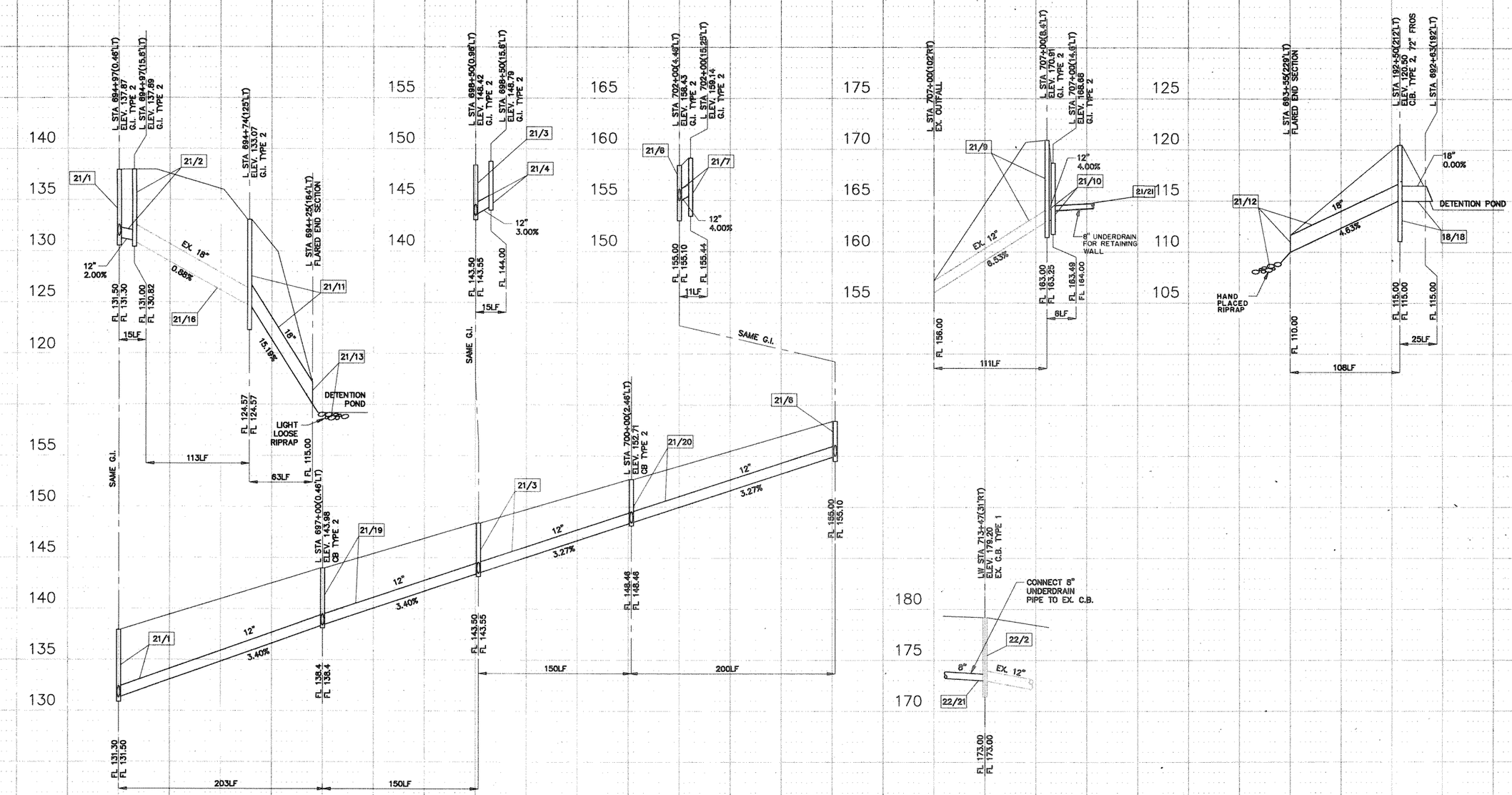

ANNE C. SYMONDS
STATE OF WASHINGTON
REGISTERED PROFESSIONAL ENGINEER
9/18/92
EXPIRES 5/22/93

DESIGNED	B.A./C.R.	5/92				REGION NO.	STATE	FED. AID PROJ. NO.	SHEET NO.	TOTAL SHEETS
DRAWN	G.W.O.	5/92				10	WASH	I-IM-405-3(79)		
REVIEWED	A.C.S.	6/92				JOB NUMBER 92W070				
PROJ. ENGR.	R. KINOSHITA									
DIST. ADM.	R.Q. ANDERSON					CONTRACT NO.				
		DATE	REVISION	BY	APP'D					

PROGRAM DEVELOPMENT DIVISION

APPROVED

Washington State Department of Transportation

HDR ENGINEERING INC.

ANNE SYMONDS & ASSOC., INC.
CONSULTING ENGINEERS

SR 405
NORTHRUP TO BOTHELL
HOV AND SC&DI - STAGE I

DRAINAGE PROFILE

DP13

SHEET 96 OF 474 SHEETS

9/18/92

9102SP13.DWG

1" = 50'

9:30AM

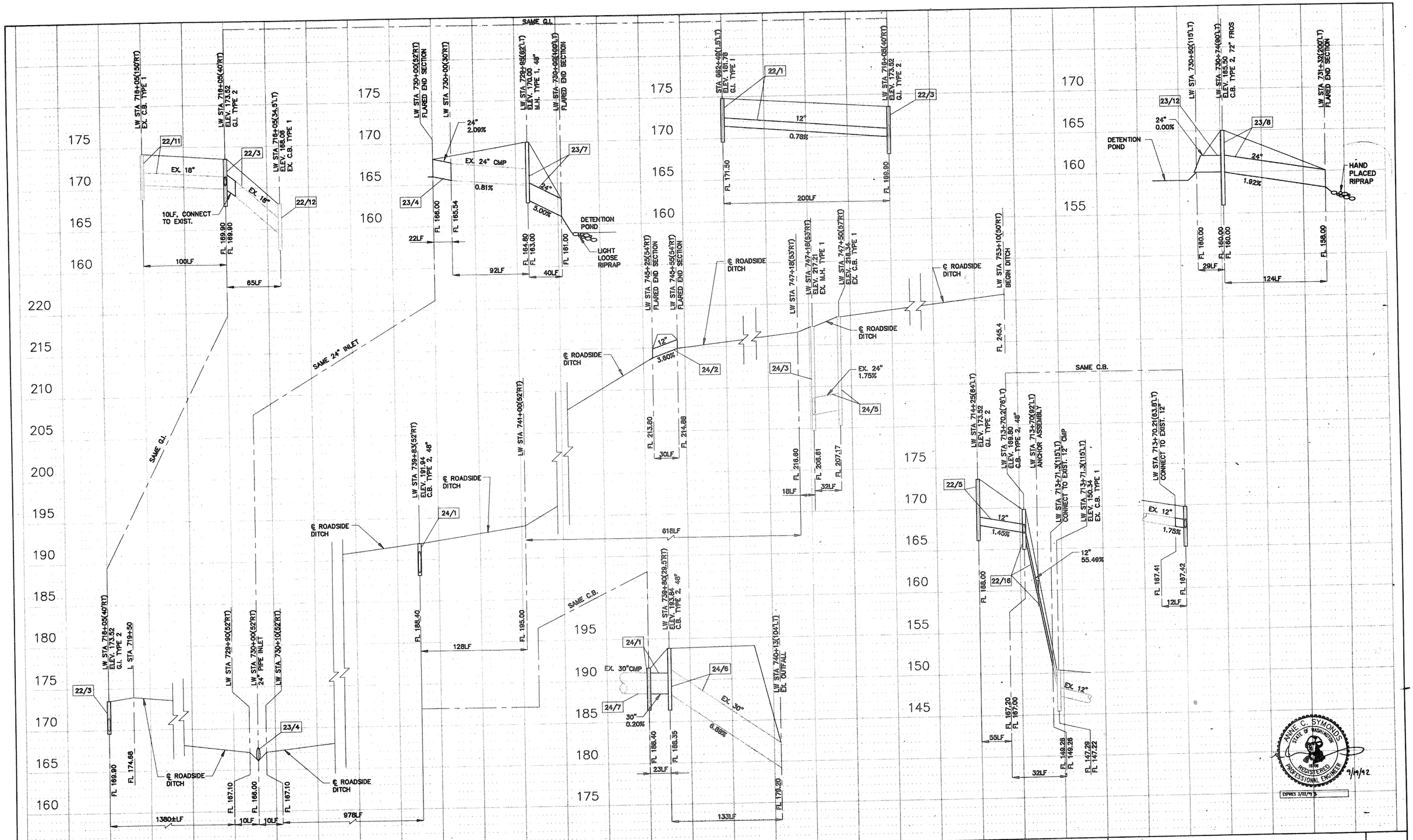

DESIGNED	B.A./C.R.	5/92			REGION NO. 10	STATE WASH	FED. AID PROJ. NO. I-IM-405-3(791)	SHEET NO.	TOTAL SHEETS	PROGRAM DEVELOPMENT DIVISION
DRAWN	G.W.O.	5/92			JOB NUMBER 92W070					
REVIEWED	A.C.S.	6/92			CONTRACT NO.					APPROVED
PROJ. ENGR.	R. KINOSHITA									
DIST. ADM.	R.Q. ANDERSON									
		DATE	REVISION	BY	APP'D					

Washington State Department of Transportation

HDR ENGINEERING INC.

ANNE SYMONDS & ASSOC., INC. CONSULTING ENGINEERS

SR 405
NORTHRUP TO BOTHELL
HOV AND SC&DI - STAGE I

DRAINAGE PROFILE

DP14

SHEET 97 OF 474 SHEETS

97

10:00AM 8/19/92 1" =50' 91025P14.DWG

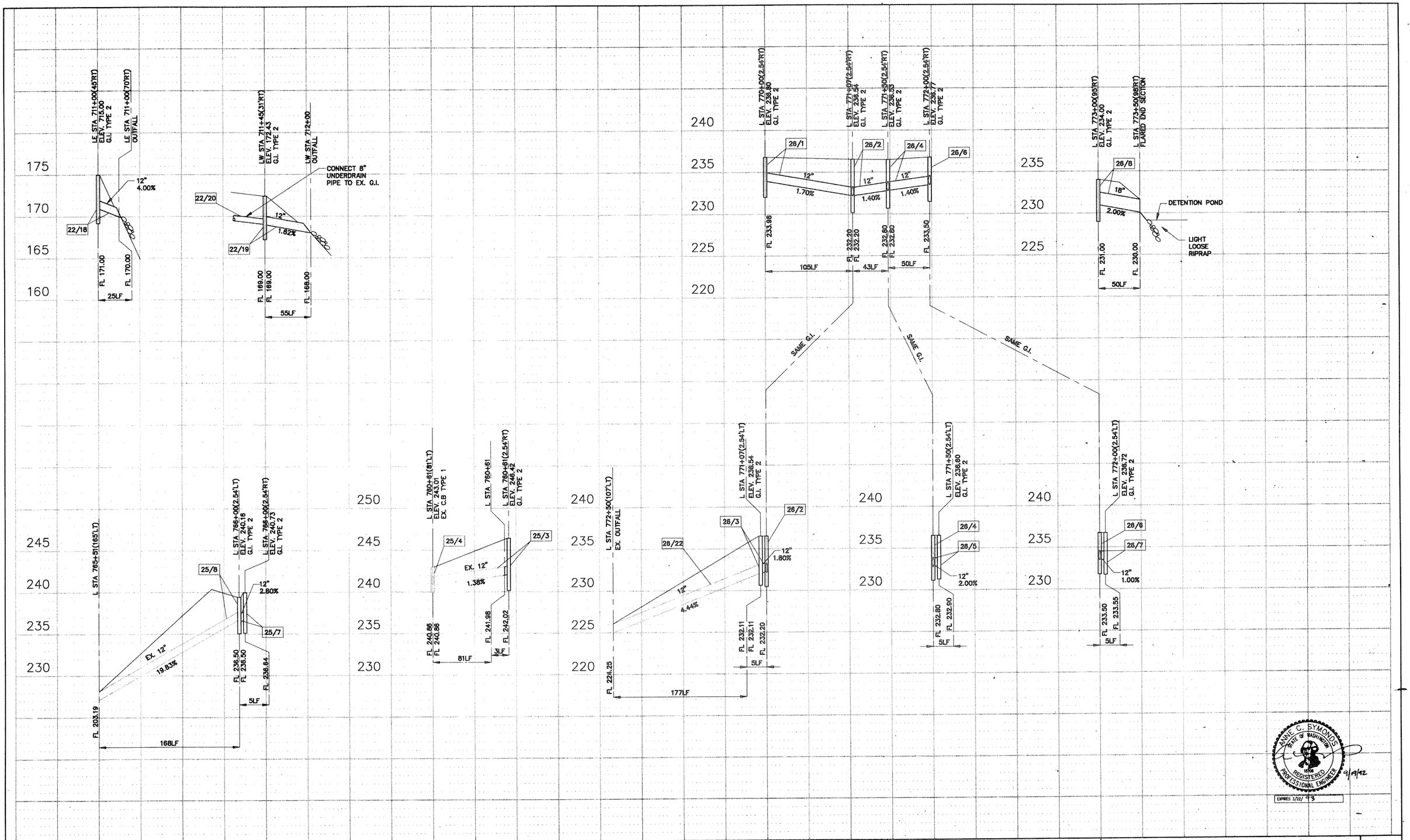

DESIGNED B.A./C.R.	5/92				
DRAWN G.W.O.	5/92				
REVIEWED A.C.S.	6/92				
PROJ. ENGR. R. KINOSHITA					
DIST. ADM. R.Q. ANDERSON					
	DATE	REVISION	BY	APP'D	

REGION NO.	STATE	FED. AID PROJ. NO.	SHEET NO.	TOTAL SHEETS
10	WASH	I-IM-405-3(791)		

JOB NUMBER 92W070

CONTRACT NO.

PROGRAM DEVELOPMENT DIVISION

APPROVED

Washington State Department of Transportation

HDR ENGINEERING INC.

ANNE SYMONDS & ASSOC., INC.
CONSULTING ENGINEERS

SR 405
NORTHRUP TO BOTHELL
HOV AND SC&DI - STAGE I

DRAINAGE PROFILE

DP15

SHEET 98 OF 474 SHEETS

9/19/92

91025P15.DWG

1"=50'

9:30AM

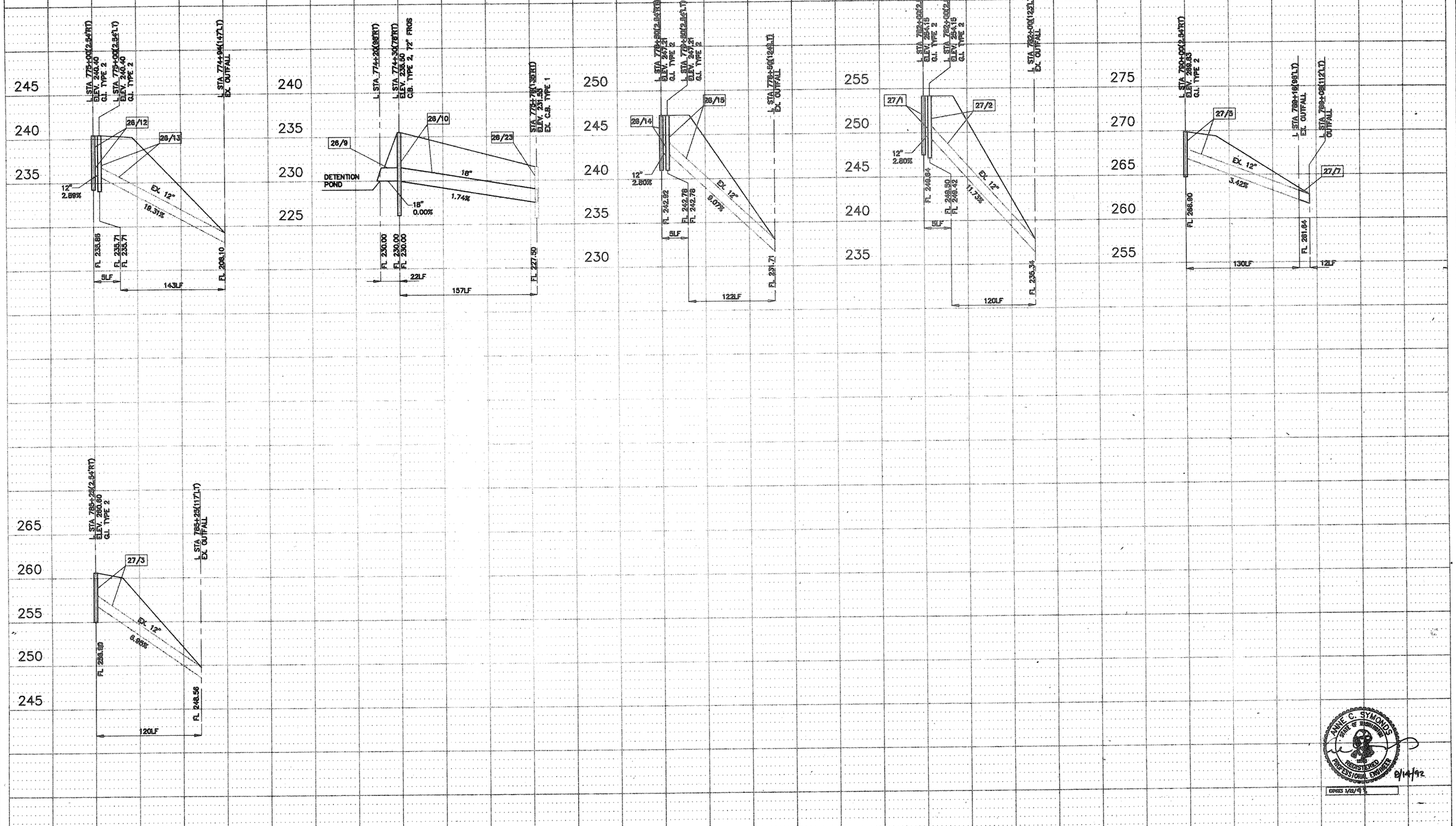

ANNIE C. SYMONDS
STATE OF WASHINGTON
REGISTERED PROFESSIONAL ENGINEER
8/14/92
EXPIRES 3/22/93

DESIGNED	B.A./C.R.	5/92				REGION NO.	STATE	FED. AID PROJ. NO.	SHEET NO.	TOTAL SHEETS
DRAWN	G.W.O.	5/92				10	WASH	I-IM-405-3(79)		
REVIEWED	A.C.S.	5/92				JOB NUMBER 92W070				
PROJ. ENGR.	R. KINOSHITA					CONTRACT NO.				
DIST. ADM.	R.Q. ANDERSON									
		DATE	REVISION	BY	APP'D					

PROGRAM DEVELOPMENT DIVISION

APPROVED

Washington State Department of Transportation

HDR ENGINEERING INC.

ANNE SYMONDS & ASSOC., INC.
CONSULTING ENGINEERS

SR 405
NORTHUP TO BOTHELL
HOV AND SC&DI - STAGE I

DRAINAGE PROFILE

DP16

SHEET 99 OF 474 SHEETS

11:00AM 8/14/92 91025P16.DWG 1"=50'

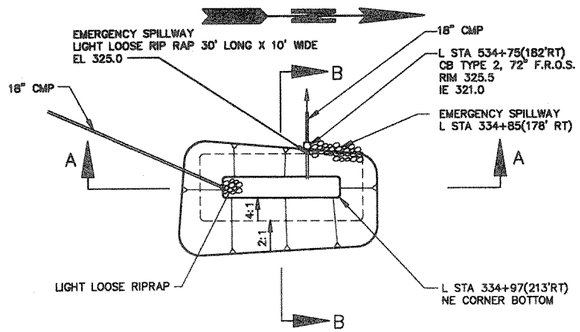

PLAN
DETENTION POND AT L STA 534+75(182'RT)
SCALE: 1"=50'

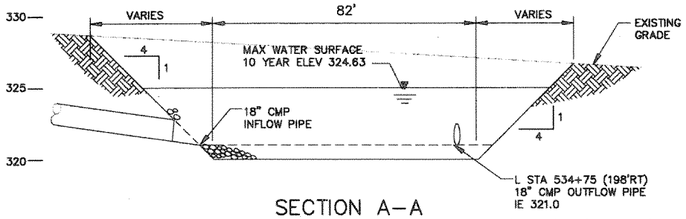

SECTION A–A
DETENTION POND AT L STA 534+75(182'RT)
SCALE: 1"=20' HORIZ
1"=5' VERT

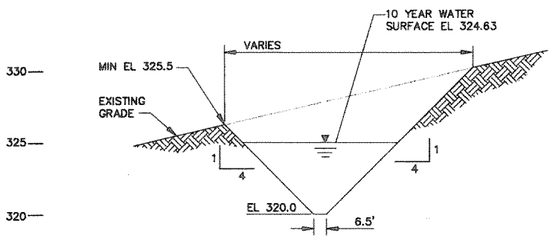

SECTION B–B
DETENTION POND AT L STA 534+75(182'RT)
SCALE: 1"=20' HORIZ
1"=5' VERT

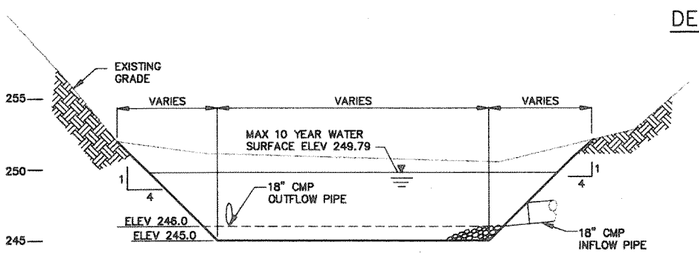

SECTION A–A
DETENTION POND AT SBCD STA 64+50(280'LT)
SCALE: 1"=20' HORIZ
1"=5' VERT

1. THE FIRST ANCHOR SHALL BE INSTALLED ON THE FIRST SECTION OF THE LOWER END OF THE PIPE AND REMAINING ANCHORS EVENLY SPACED THROUGHOUT THE INSTALLATION.
2. IF THE PIPE BEING INSTALLED HAS A MANHOLE OR CATCH BASIN ON THE LOWER END OF THE PIPE, THE FIRST PIPE ANCHOR MAY BE ELIMINATED.
3. WHEN C.M.P. IS USED, THE ANCHORS MAY BE ATTACHED TO THE COUPLING BANDS USED TO JOIN THE PIPES AS LONG AS THE SPECIFIED SPACING IS NOT EXCEEDED.
4. ALL PIPE ANCHORS SHALL BE SECURELY INSTALLED BEFORE BACKFILLING AROUND THE PIPE.

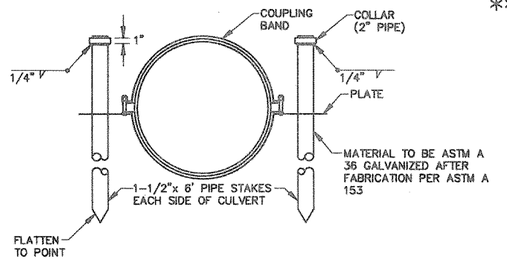

ANCHOR ASSEMBLY – CORRUGATED METAL PIPE
N.T.S.

ANCHOR SPACING SCHEDULE

PIPE DIA.	MAXIMUM ANCHOR SPACING 4:1 SLOPE CONC.	4:1 SLOPE C.M.P.	3:1 SLOPE CONC.	3:1 SLOPE C.M.P.	2:1 SLOPE CONC.	2:1 SLOPE C.M.P.
8"	125'	250'	95'	190'	65'	135'
12"	55'	130'	40'	100'	30'	70'
18"	25'	65'	20'	50'	15'	35'

FOR GRADES 10% TO 20% USE SPACING FOR 4:1 SLOPE
FOR GRADES 21% TO 30% USE SPACING FOR 4:1 SLOPE
FOR GRADES 31% TO 40% USE SPACING FOR 3:1 SLOPE
FOR GRADES 41% TO 55% USE SPACING FOR 2:1 SLOPE

THE NUMBER OF PIPE ANCHORS PER RUN OF PIPE SHALL BE DETERMINED BY THE FOLLOWING FORMULA:

$$**\text{NUMBER OF ANCHORS} = \frac{\text{LENGTH OF PIPE}}{\text{SPACING FROM SCHEDULE}}$$

** 1. FRACTIONS 0.3 OR LARGER SHALL BE ROUNDED TO THE NEXT HIGHER NUMBER.
2. FRACTIONS BELOW 0.3 SHALL BE DROPPED EXCEPT THE MINIMUM NUMBER OF ANCHORS SHALL BE ONE (1) WHEN MORE THAN ONE SECTION OF PIPE IS USED.

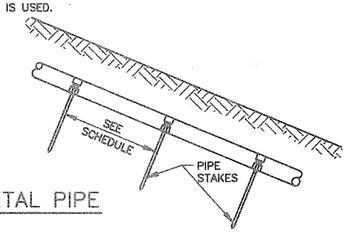

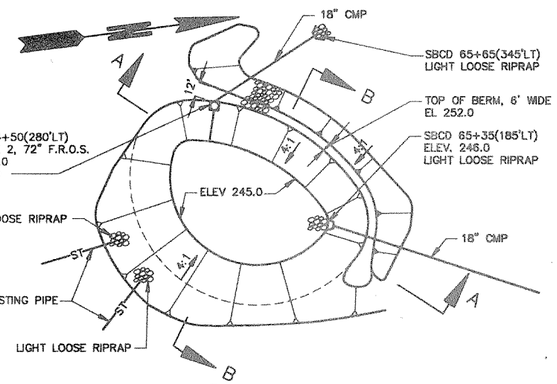

PLAN
DETENTION POND AT SBCD STA 64+50(280'LT)
SCALE: 1"=50'

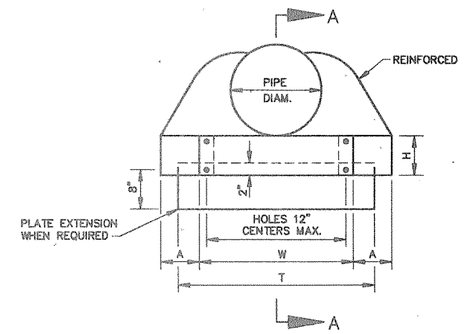

ELEVATION PIPE
N.T.S.

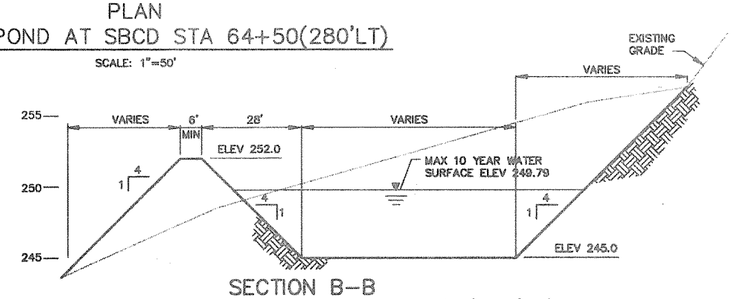

SECTION B–B
DETENTION POND AT SBCD STA 64+50(280'LT)
SCALE: 1"=20' HORIZ
1"=5' VERT

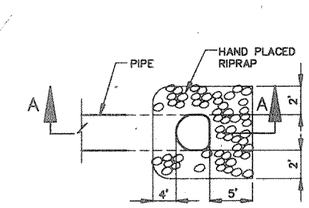

PLAN
NTS

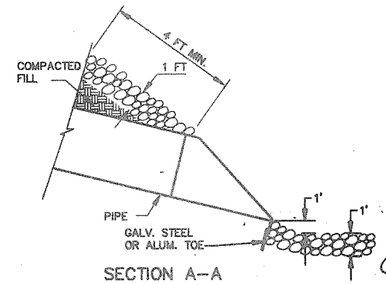

SECTION A–A

FLARED OR BEVELED END DETAIL
WITH RIPRAP PLACEMENT
NTS

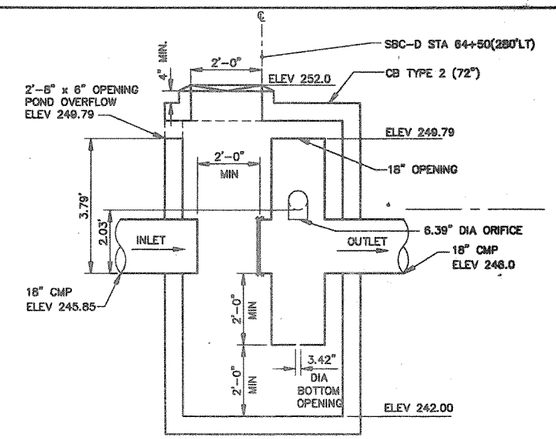

OUTFLOW CONTROL SYSTEM DETAIL
DETENTION POND AT SBCD STA 64+50(280'LT)
CATCH BASIN TYPE 2, 72" WITH FLOW RESTRICTOR OIL SEPARATOR
SCALE: NTS

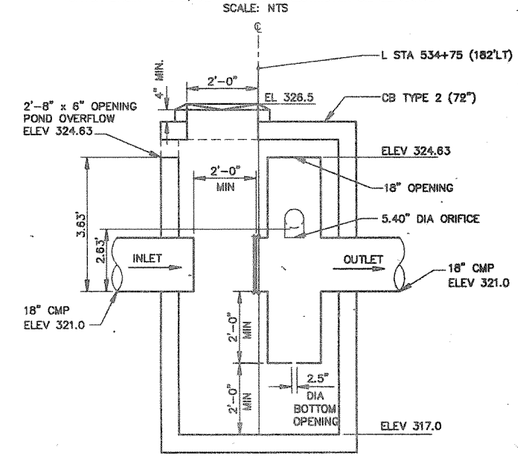

OUTFLOW CONTROL SYSTEM DETAIL
DETENTION POND AT L STA 534+75(182'RT)
CATCH BASIN TYPE 2, 72" WITH FLOW RESTRICTOR OIL SEPARATOR
SCALE: NTS

ANNE C. SYMONDS STATE OF WASHINGTON REGISTERED PROFESSIONAL ENGINEER
EXPIRES 1/22/93

DESIGNED	B.A./C.R.	5/92				REGION NO. 10	STATE WASH	FED. AID PROJ. NO. I-IM-405-3(79)	SHEET NO.	TOTAL SHEETS
DRAWN	M.L.S., M.T.F.	5/92				JOB NUMBER 92W070				
REVIEWED	A.C.S.	6/92				CONTRACT NO.				
PROJ. ENGR.	R. KINOSHITA									
DIST. ADM.	R.Q. ANDERSON									
		DATE	REVISION	BY	APP'D					

PROGRAM DEVELOPMENT DIVISION
APPROVED

Washington State Department of Transportation

HDR ENGINEERING INC.
ANNE SYMONDS & ASSOC., INC.
CONSULTING ENGINEERS

SR 405
NORTHUP TO BOTHELL
HOV AND SC&DI - STAGE I

DRAINAGE DETAILS

DD1

SHEET 100 OF 474 SHEETS

91025001.DWG 8/14/92 5:00PM 1"=50'

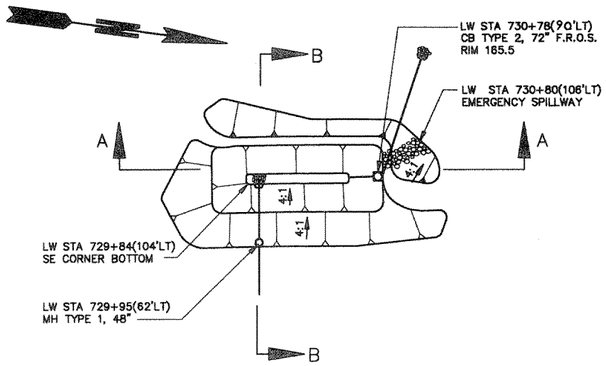

PLAN
DETENTION POND AT LW STA 730+78(115'LT)
SCALE: 1"=50'

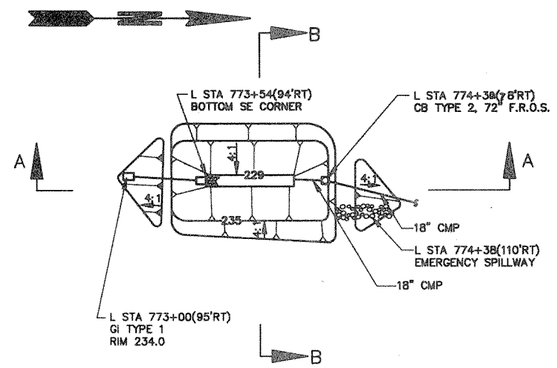

PLAN
DETENTION POND AT L STA 774+38(98'RT)
SCALE: 1"=50'

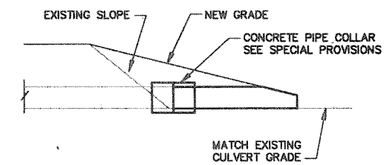

CULVERT EXTENSION DETAIL
FOR CONCRETE PIPE
N.T.S.

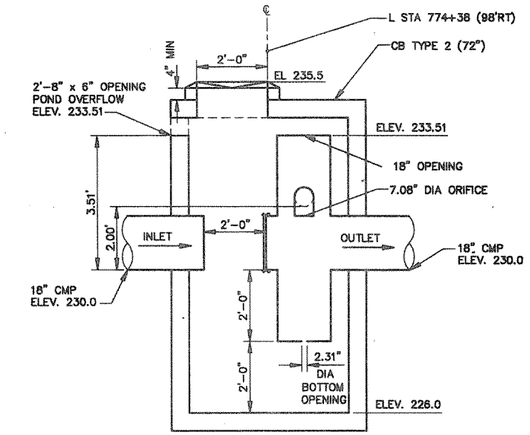

OUTFLOW CONTROL SYSTEM DETAIL
DETENTION POND AT L STA 774+38(98'RT)
CATCH BASIN TYPE 2, 72" WITH FLOW RESTRICTOR OIL SEPARATOR
NTS

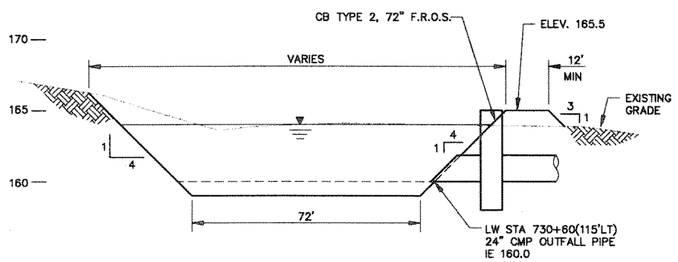

SECTION A–A
DETENTION POND AT LW STA 730+78(115'LT)
SCALE: 1"=20' HORIZ
1"=5' VERT

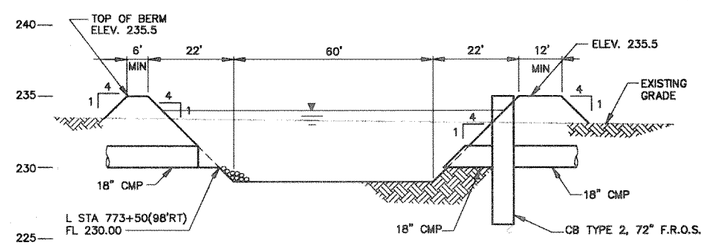

SECTION A–A
DETENTION POND AT L STA 774+38(98'RT)
SCALE: 1"=20' HORIZ
1"=5' VERT

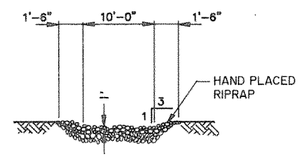

EMERGENCY SPILLWAY DETAIL
N.T.S.

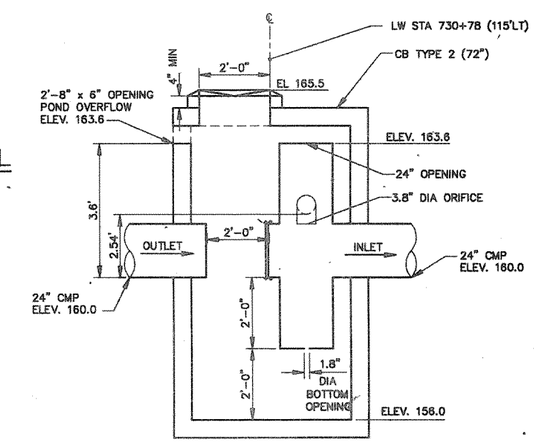

OUTFLOW CONTROL SYSTEM DETAIL
DETENTION POND AT LW STA 730+78(115'LT)
CATCH BASIN TYPE 2, 72" WITH FLOW RESTRICTOR OIL SEPARATOR
NTS

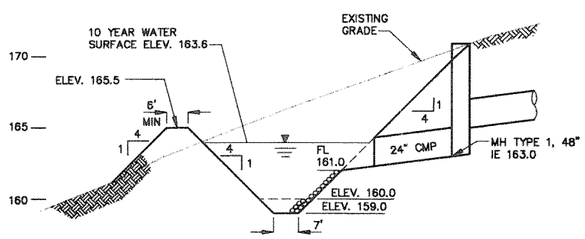

SECTION B–B
DETENTION POND AT LW STA 730+78(115'LT)
SCALE: 1"=20' HORIZ
1"=5' VERT

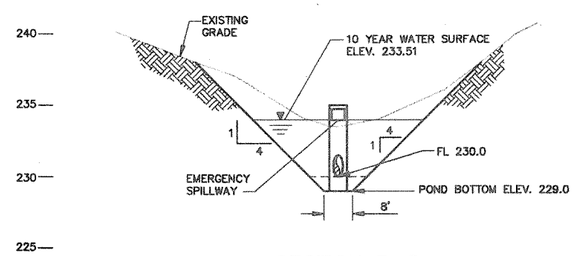

SECTION B–B
DETENTION POND AT L STA 774+38(98'RT)
SCALE: 1"=20' HORIZ
1"=5' VERT

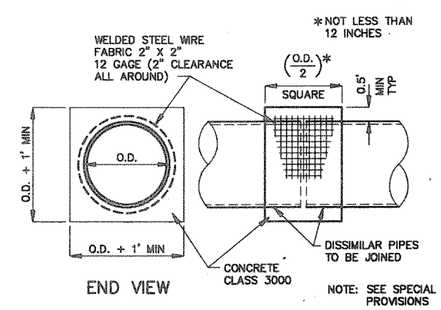

CONCRETE PIPE COLLAR DETAIL
N.T.S.

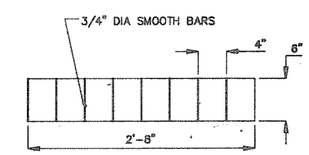

POND OVERFLOW
NTS

ANNE C. SYMONDS
STATE OF WASHINGTON
REGISTERED
PROFESSIONAL ENGINEER
8/14/92
EXPIRES 3/22/93

DESIGNED	B.A./C.R.	5/92				REGION NO.	STATE	FED. AID PROJ. NO.	SHEET NO.	TOTAL SHEETS	PROGRAM DEVELOPMENT DIVISION
DRAWN	M.L.S., M.T.F.	5/92				10	WASH	I-IM-405-3(791)			
REVIEWED	A.C.S.	6/92				JOB NUMBER					
PROJ. ENGR.	R. KINOSHITA					92W070					
DIST. ADM.	R.Q. ANDERSON					CONTRACT NO.					APPROVED
		DATE	REVISION	BY	APP'D						

Washington State Department of Transportation

HDR ENGINEERING INC.

ANNE SYMONDS & ASSOC., INC.
CONSULTING ENGINEERS

SR 405
NORTHUP TO BOTHELL
HOV AND SC&DI - STAGE I

DRAINAGE DETAILS

DD2

SHEET 101 OF 474 SHEETS

9:30AM 8/14/92 1"=50' 91025D02.DWG

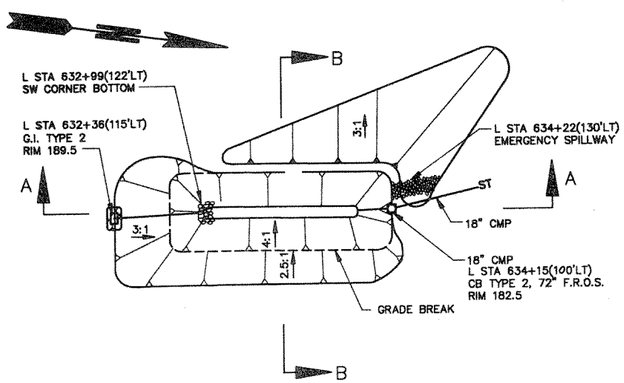

PLAN
DETENTION POND AT L STA 634+15(120'LT)
SCALE: 1"=50'

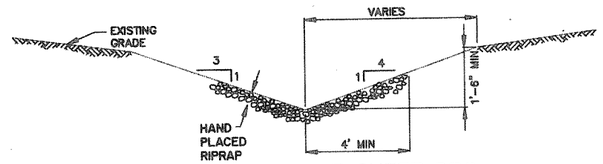

DITCH SECTION AT SHEET DR6
N.T.S.

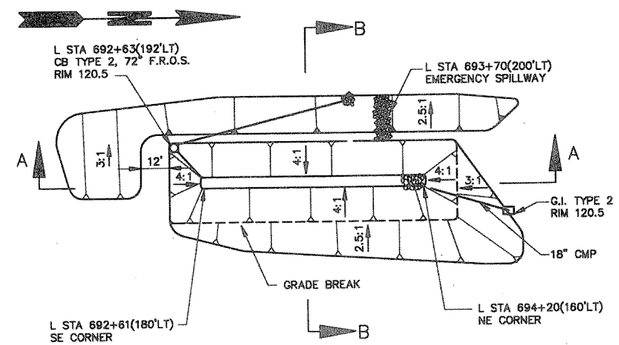

PLAN
DETENTION POND AT L STA 692+63(192'LT)
SCALE: 1"=50'

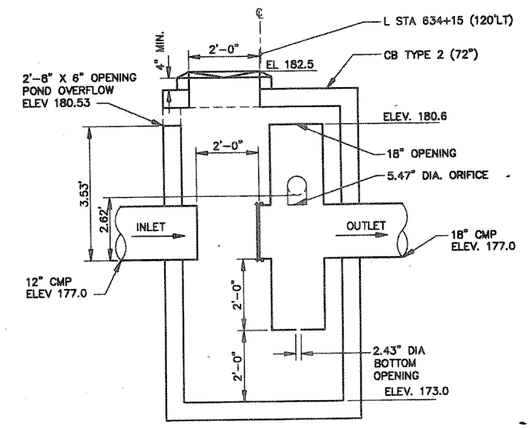

OUTFLOW CONTROL SYSTEM DETAIL
DETENTION POND AT L STA 634+15(120'LT)
CATCH BASIN TYPE 2, 72" WITH FLOW RESTRICTOR OIL SEPARATOR
NTS

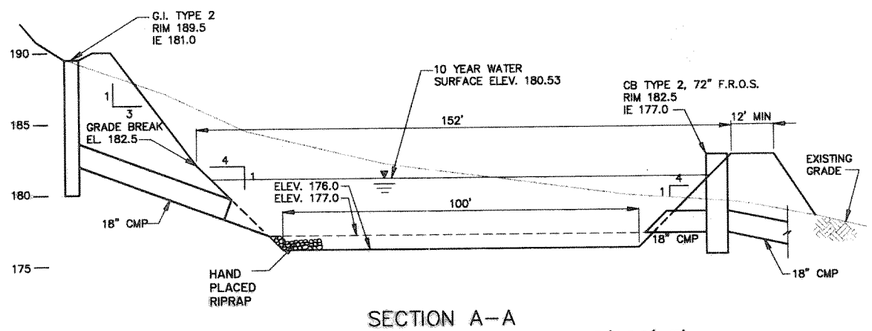

SECTION A–A
DETENTION POND AT L STA 634+15(120'LT)
SCALE: 1"=20' HORIZ
1"=5' VERT

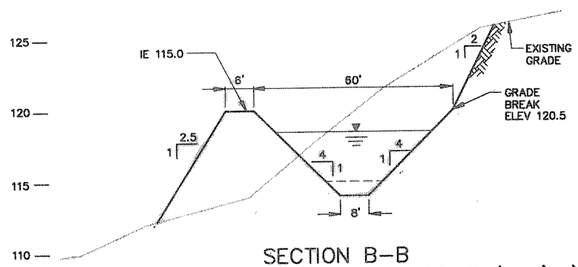

SECTION B–B
DETENTION POND AT L STA 692+63(192'LT)
SCALE: 1"=20' HORIZ
1"=5' VERT

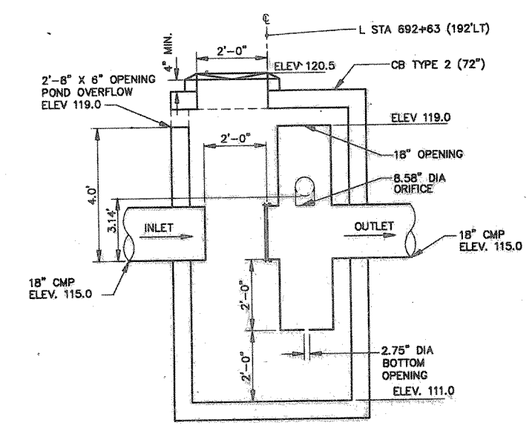

OUTFLOW CONTROL SYSTEM DETAIL
DETENTION POND AT L STA 692+63(192'LT)
CATCH BASIN TYPE 2, 72" WITH FLOW RESTRICTOR OIL SEPARATOR
NTS

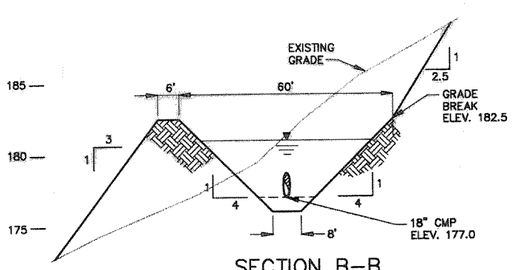

SECTION B–B
DETENTION POND AT L STA 634+15(120'LT)
SCALE: 1"=20' HORIZ
1"=5' VERT

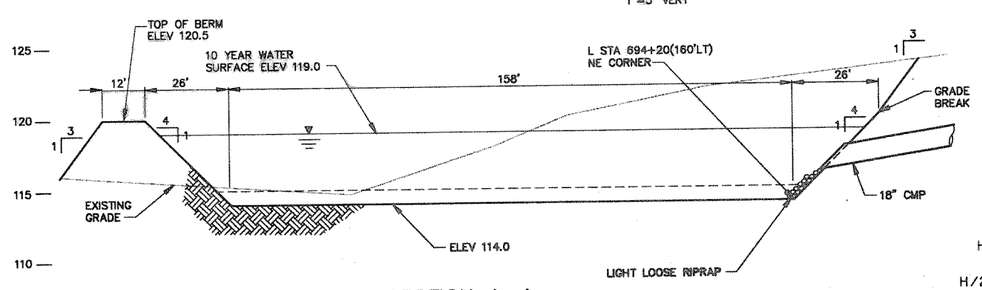

SECTION A–A
DETENTION POND AT L STA 692+63(192'LT)
SCALE: 1"=20' HORIZ
1"=5' VERT

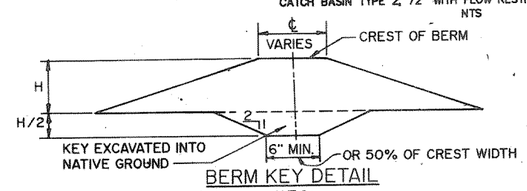

BERM KEY DETAIL
N.T.S.

ANNE C. SYMONDS
STATE OF WASHINGTON
REGISTERED PROFESSIONAL ENGINEER
8/14/92
EXPIRES 3/22/93

DESIGNED	B.A./C.R.	5/92				REGION NO.	STATE	FED. AID PROJ. NO.	SHEET NO.	TOTAL SHEETS
DRAWN	M.L.S., M.T.F.	5/92				10	WASH	I-IM-405-3(791)		
REVIEWED	A.C.S.	6/92				JOB NUMBER 92W070				
PROJ. ENGR.	R. KINOSHITA					CONTRACT NO.				
DIST. ADM.	R.Q. ANDERSON									
		DATE	REVISION	BY	APP'D					

PROGRAM DEVELOPMENT DIVISION

APPROVED

Washington State Department of Transportation

HDR ENGINEERING INC.

ANNE SYMONDS & ASSOC., INC.
CONSULTING ENGINEERS

SR 405
NORTHUP TO BOTHELL
HOV AND SC&DI - STAGE I

DRAINAGE DETAILS

DD3

SHEET 102 OF 474 SHEETS

9:30AM 8/10/92 91025003.DWG 1"=50'

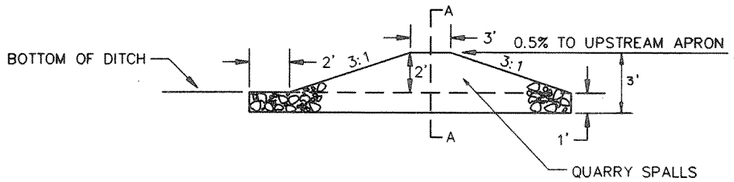

ELEVATION VIEW

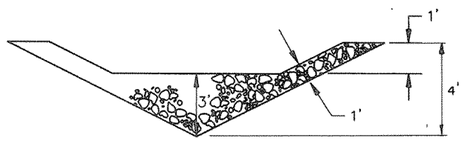

SECTION A–A

N.T.S.

ROCK CHECK DAM

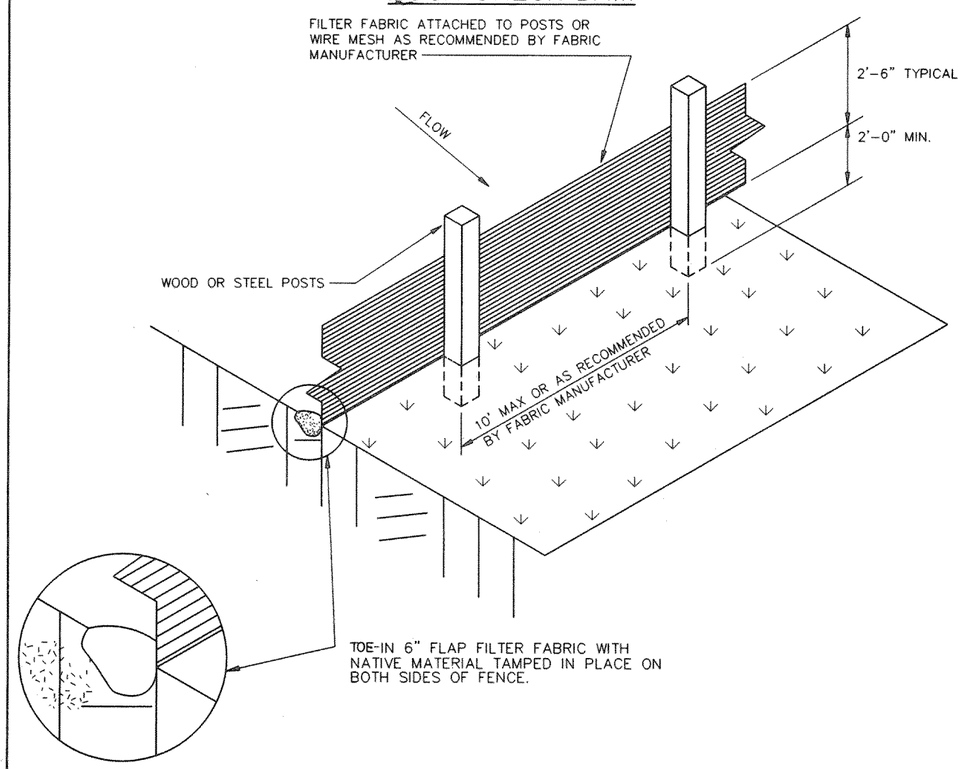

GEOTEXTILE SILT FENCE CONSTRUCTION DETAIL

N.T.S.

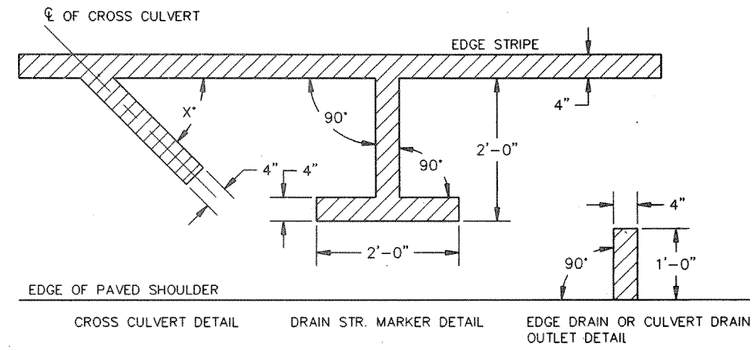

X = ANGLE OF CROSS CULVERT

SPECIAL PLASTIC DRAINAGE MARKINGS

N.T.S.

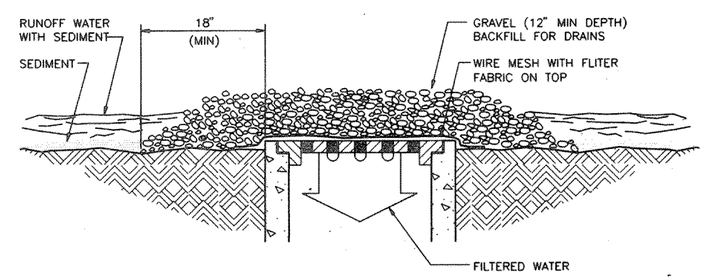

GRAVEL & WIRE MESH FILTER DETAIL

N.T.S.

JOHN R. GENSMER, STATE OF WASHINGTON, REGISTERED PROFESSIONAL ENGINEER
EXPIRES 3/21/94
7/9/92

DESIGNED R.G.O.					REGION NO.	STATE	FED. AID PROJ. NO.	SHEET NO.	TOTAL SHEETS
DRAWN					10	WASH	I-IM-405-3(791)		
REVIEWED									
CHECKED B.N.B.					JOB NUMBER				
PROJ. ENGR. R. KINOSHITA					92W070				
DIST. ADM. R. Q. ANDERSON					CONTRACT NO.				
	DATE	DATE	REVISION	BY					

PROGRAM DEVELOPMENT DIVISION

Washington State Department of Transportation

HDR ENGINEERING INC.

SR 405
NORTHUP TO BOTHELL
HOV AND SC&DI - STAGE 1

MISCELLANEOUS DRAINAGE DETAILS

DD4

SHEET 103 OF 474 SHEETS

SR 405 NORTHUP TO BOTHELL HOV LANES - STAGE 1 MP 16.06 TO MP 22.50 OL 0889

P:\405N=DRN\DD405N04 07/07/92 10:16am 1=96