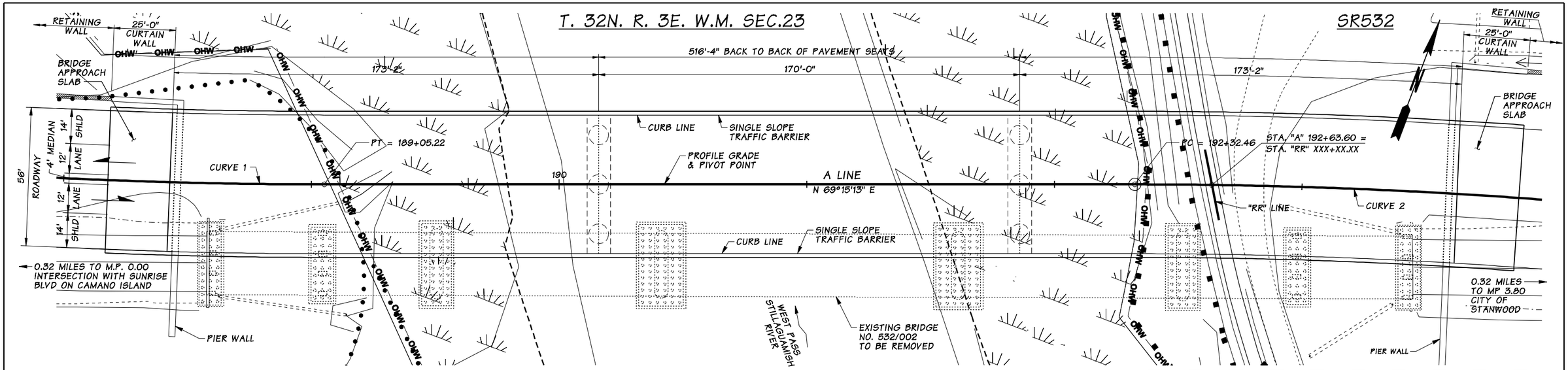

PLAN

BEARING OF PIERS 1-4 ARE NORMAL TO "A" LINE
WSDOT R/W OUTSIDE PLAN VIEW EXTENTS (XX MIN OFFSET FROM CURB LINE OF PROPOSED BRIDGE)

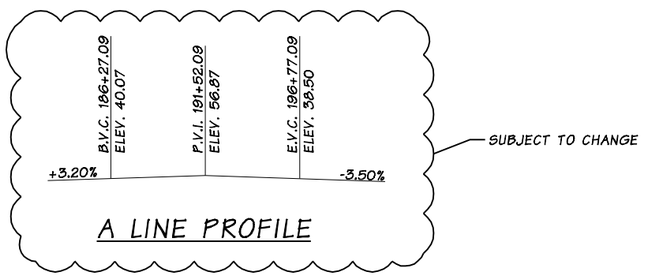

A LINE PROFILE

CURVE DATA					
CURVE	DELTA	RADIUS	TANGENT	LENGTH	S
1	23°14'54"	2200'	452.56'	892.67'	
2	20°53'42"	2200'	405.66'	802.31'	

SUBJECT TO CHANGE

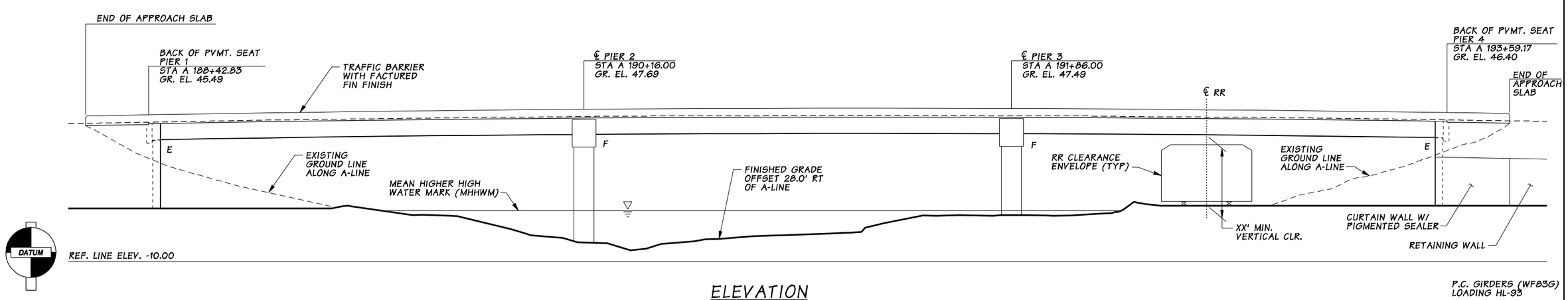

ELEVATION

P.C. GIRDERS (WF83G)
LOADING HL-93

PRELIMINARY

FILE NAME	F:\2008\SAPWT-08-193\CADD\wsdot-file set\CADD\Bridge\PS&ESheets\PS_BGBR.dgn						
TIME	2:24:21 PM				REGION NO. 10	STATE WASH	FED.AID PROJ.NO.
DATE	8/6/2008						
PLOTTED BY	childress				JOB NUMBER		
DESIGNED BY							
ENTERED BY							
CHECKED BY					CONTRACT NO.		LOCATION NO.
PROJ. ENGR.							
REGIONAL ADM.		REVISION	DATE	BY			

P.E. STAMP BOX DATE

P.E. STAMP BOX DATE

Washington State Department of Transportation

CAMANO ISLAND TO I-5 CORRIDOR IMPROVEMENTS DESIGN / BUILD

BRIDGE PLAN & ELEVATION

Plot 1

SHEET OF SHEETS

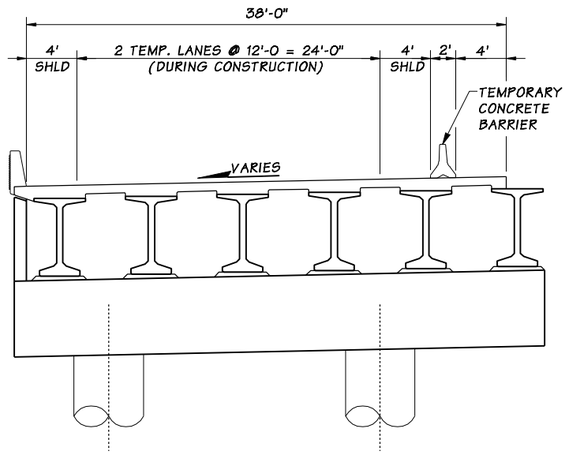

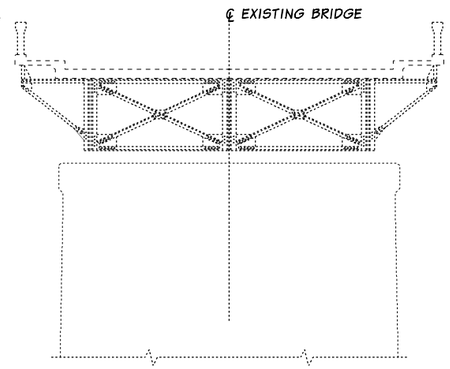

TYPICAL SECTION - STAGE 1

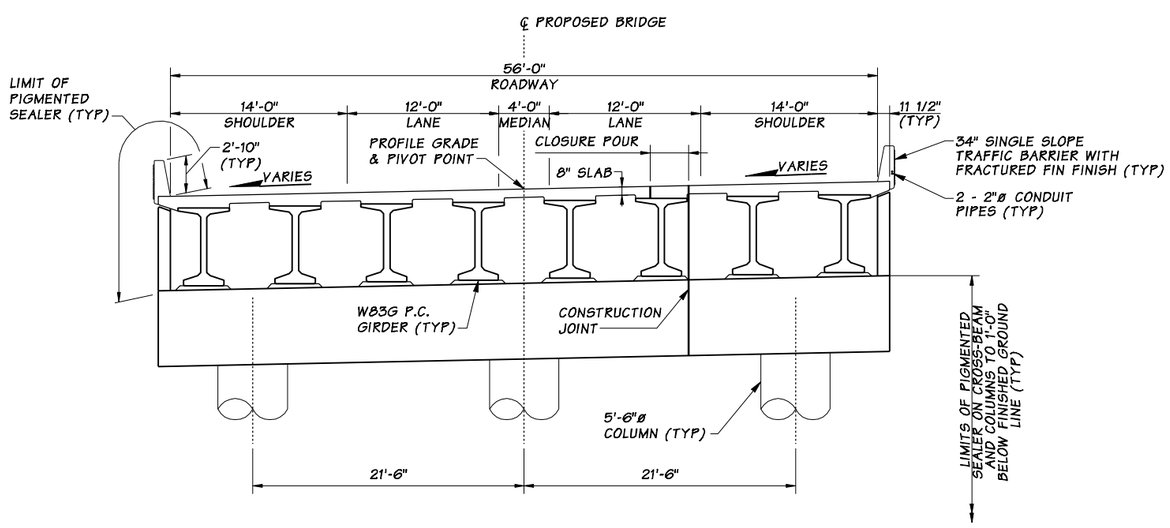

TYPICAL SECTION - STAGE 1 & 2

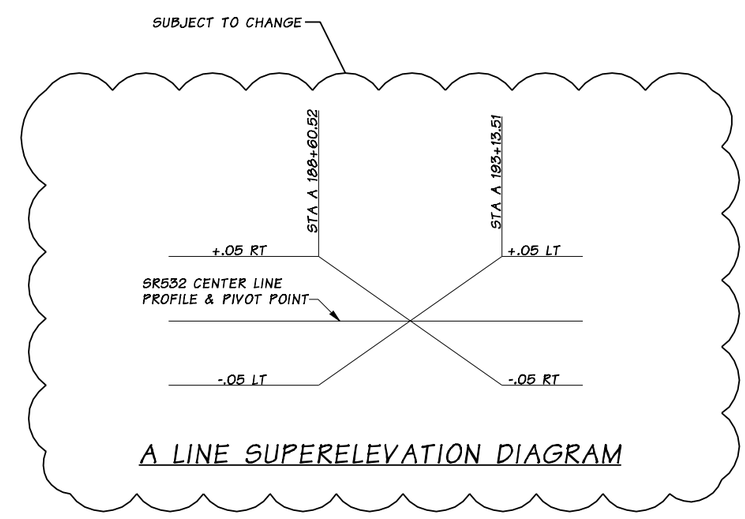

A LINE SUPERELEVATION DIAGRAM

PRELIMINARY

FILE NAME	F:\2008\SAPWT-08-193\CADD\wsdot-file set\CADD\Bridge\PS&ESheets\PS_BGRSBR.dgn				REGION NO.	STATE	FED.AID PROJ.NO.		Plot 1
TIME	2:26:05 PM				10	WASH		Washington State Department of Transportation	CAMANO ISLAND TO I-5 CORRIDOR IMPROVEMENTS DESIGN / BUILD
DATE	8/6/2008				JOB NUMBER				
PLOTTED BY	childress								SHEET
DESIGNED BY									OF
ENTERED BY									
CHECKED BY					CONTRACT NO.		LOCATION NO.		
PROJ. ENGR.									TYPICAL SECTIONS
REGIONAL ADM.		REVISION	DATE	BY					SHEETS

P.E. STAMP BOX DATE

P.E. STAMP BOX DATE