Washington State
Department of Transportation

Field Guide for Accessible Public Rights of Way

2012 Edition

CONTENTS

ACCESSIBILITY CRITERIA CHECKLISTS **1–8**
PEDESTRIAN CIRCULATION PATH (PCP) **1**
PEDESTRIAN ACCESS ROUTE (PAR) **1**
CURB RAMPS **3**
DETECTABLE WARNING SURFACE (DWS) **4**
DRIVEWAYS **4**
MEDIAN/TRAFFIC ISLAND/SPLITTER ISLAND **4**
BUS STOPS **5**
PEDESTRIAN PUSH BUTTONS – GENERAL **5**
PED PUSH BUTTONS AND ACCESSIBLE PED SIGNALS (APS) **7**
ALTERNATE PEDESTRIAN CIRCULATION PATH (APCP) WZ **8**
PED DETOUR ON EXISTING PED CIRCULATION PATHS WZ **8**

PEDESTRIAN CIRCULATION PATH (PCP)
Pedestrian circulation path **9**
Width **9**
Required clearance **9**

PROTRUDING OBJECTS/OBSTRUCTIONS
Protruding objects **10**
Protrusion limits **10**
Post-mounted objects **11**

PEDESTRIAN ACCESS ROUTE (PAR)
Pedestrian access route **12**
Continuous width **12**
Width at passing spaces **13**
Cross slope **13**
Running slope **13**

ACCESS ROUTE SURFACE ELEMENTS
Access route surface **14**
Vertical alignment **14**
Vertical discontinuities **15**
Pedestrian access route joints & gratings **15**
Grate openings **16**
Railroad crossings **17**
Flangeway gaps **17**
Light rail crossing **17**
Freight rail crossing **17**
Examples of noncompliant surfaces **17**

CONTENTS

CURB RAMPS

Perpendicular type curb ramp

Perpendicular type curb ramps **18**
Ramp running slopes **18**
Ramp cross slopes **18**
Landing **18**
Flares **18**

Parallel type curb ramp

Parallel type curb ramps **19**
Ramp running slopes **19**
Ramp cross slopes **19**
Landing **19**

Combination type curb ramp

Combination type curb ramps **20**
Ramp running slopes **20**
Ramp cross slopes **20**
Landing **20**

Single-direction parallel type curb ramp

Single-direction parallel type curb ramps **21**
Ramp running slopes **21**
Ramp cross slopes **21**
Landing **21**

Diagonally-oriented parallel type curb ramp

Ramp running slopes **22**
Ramp cross slopes **22**
Landing **22**
Continuous detectable warning surface **22**

CURB RAMP TRANSITIONS

Clear space **23**
Counter slope **23**

CONTENTS

DETECTABLE WARNING SURFACES (DWS)
Detectable warning surfaces **23**
Placement **23**
Size **23**
Color **23**

Detectable Warning Surface Detail
Single-direction curb ramp **24**
Parallel curb ramp **24**
Pedestrian railroad crossing **25**
Shared-use path connection **25**
Island pass-through **25**
Median pass-through **25**

PEDESTRIAN PUSH BUTTONS AND ACESSIBLE PEDESTRIAN SIGNALS (APS)
Pedestrian push buttons **26**
Accessible pedestrian signals (APS) **26**

CROSSWALKS
Crosswalks **27**

DRIVEWAYS
Design **28**
Option A **28**
Option B **28**
Option C **29**
Option D **29**

BUS STOPS
Bus Boarding & Alighting Areas
Surface **30**
Dimensions **30**
Connection **30**
Slope **30**

ALTERNATE PEDESRIAN CIRCULATION PATHS AND PEDESTRIAN DETOURS
Description **31**

ACCESSIBILITY CRITERIA CHECKLISTS

PEDESTRIAN CIRCULATION PATH (PCP)

- A PCP must contain a continuous pedestrian access route.
- If walkway surfaces diverge within a PCP, any resulting vertical drop-offs must be protected to prevent trips or falls.
- Vertical clearance for objects that protrude into or overhang a PCP is 80 inches minimum (84 inches minimum for signs per the *Manual on Uniform Traffic Control Devices* [MUTCD]).
  - ◇ If minimum vertical clearance cannot be provided, provide a railing or barrier with a leading edge 27 inches maximum above the surface to channelize pedestrians away from the point of reduced vertical clearance.
- Protruding objects on a PCP shall not reduce the clear width of the PAR to less than 4 feet, exclusive of the curb.
- Objects mounted on posts at a height greater than 27 inches and less than 80 inches (84 inches for signs per the MUTCD) above the surface shall not protrude more than 4 inches into a PCP.
- For objects mounted on multiple posts where the clear distance between the posts is greater than 12 inches, the lowest edge of the object shall be either 27 inches maximum or 80 inches minimum (84 inches minimum for signs per the MUTCD) above the surface.
- Objects that protrude farther than 4 inches into a PCP at a height greater than 27 inches and less than 80 inches above the surface must be equipped with a cane-detectable warning device.

PEDESTRIAN ACCESS ROUTE (PAR)

- PARs must be continuous within interconnected walkways, sidewalks, ramps, curb ramps (excluding flares), landings, crosswalks, overpasses, underpasses, elevators, or platform lifts.
- Continuous, unobstructed clear width shall be 4 feet minimum (exclusive of the curb).
- A PAR with less than 5 feet clear width (exclusive of the curb) must provide passing spaces no farther apart than 200 feet.
- Passing spaces shall be 5 feet x 5 feet minimum.
- Cross slope of a PAR shall be 2% maximum, with these exceptions:
  - ◇ Midblock crosswalks: Crosswalk and connected curb ramp cross slopes can match street or highway grade.
  - ◇ Crosswalks without stop sign control: Crosswalk cross slope can be 5% maximum.

ACCESSIBILITY CRITERIA CHECKLIST

PEDESTRIAN ACCESS ROUTE (PAR) (Continued)

- PAR running grade shall not exceed the general grade of the adjacent roadway when the PAR is contained within highway right of way, with the following exceptions:
  - ◇ The maximum running grade in a crosswalk (marked or unmarked) is 5%.
  - ◇ The maximum running grade on/in/approaching a pedestrian overpass/underpass is 5% unless the PAR is designed as a ramp (i.e., 8.3% maximum with landings, handrails, and edge protection, as required).
- PAR running grade shall not exceed 5% if the PAR is not contained within highway right of way unless the PAR is designed as a ramp (i.e., 8.3% maximum with landings, handrails, and edge protection, as required).
- Surface of the PAR shall be firm, stable, and slip resistant.
- Vertical alignment shall be planar within curb ramps, landings (including clear spaces for operable parts), and gutter areas within the PAR.
- Grade breaks shall be flush.
- Vertical surface discontinuities shall not exceed ¼ inch maximum.
- Vertical discontinuities between ¼ inch and ½ inch maximum shall be beveled at 2H:1V or flatter, with the following exceptions:
  - ◇ No vertical surface discontinuity is allowed at grade breaks (such as at the connections between a curb ramp and the gutter, or between a curb ramp and its landing), which must be flush.
  - ◇ No vertical surface discontinuity is allowed within curb ramps, landings, or clear spaces for operable parts, which must be planar.
- Sidewalk joints or gratings in the PAR shall not permit passage of a sphere more than ½ inch diameter**.**
- Gratings, access covers, utility objects, and other appurtenances shall not be located on curb ramps, landings, or gutters within the PAR.
- Elongated openings of a grate in the PAR shall be placed so that the long dimension is perpendicular to the dominant direction of travel.
- Openings for wheel flanges when a PAR crosses nonfreight rail track shall be 2½ inches maximum (3 inches maximum for freight rail track).

ACCESSIBILITY CRITERIA CHECKLISTS

CURB RAMPS

The accessibility criteria for PCPs and PARs also apply to curb ramps unless superseded by the following:

- Connecting each PAR to the street crossing.
- Entrance to the street contained within crosswalk markings at marked crossings.
- Clear width 4 feet minimum, unobstructed and excluding flares.
- Running slope 8.3% maximum (the ramp length is not required to exceed 15 feet along the sidewalk).
- Cross slope 2% maximum.
  - ◇ Exception: Cross slopes of curb ramps at midblock crossings are allowed to match the street or highway grade.
- Required landing (at top of perpendicular curb ramp, at bottom of parallel curb ramp):
  - ◇ 4 feet by 4 feet minimum.
  - ◇ Running and cross slopes 2% maximum.
    - ○ Exception: Cross slopes of curb ramp landings at midblock crossings are allowed to match the street or highway grade.
- Flare slopes 10% maximum:
  - ◇ Measured parallel to the back of curb.
  - ◇ Only required where a PCP crosses the curb ramp from the side.
- The counter slope of the gutter or street at the foot of the curb ramp slope shall be 5% maximum.
- Detectable warning surface required if the curb ramp/landing connects to a roadway.
- Surfaces shall be firm, stable, and slip resistant.
- Gratings, access covers, utility objects, and other appurtenances are not to be located on curb ramps, landings, or gutters within the PAR.
- Grade breaks at the top and bottom of curb ramps must be perpendicular to the direction of travel.
- Grade breaks must be flush.
- Clear space 4 feet by 4 feet minimum must be provided in the roadway beyond the curb face where the bottom of a curb ramp or landing meets the gutter. Clear space must be:
  - ◇ Contained within the width of the crosswalk.
  - ◇ Located outside the parallel vehicle travel lane.

ACCESSIBILITY CRITERIA CHECKLISTS

DETECTABLE WARNING SURFACE (DWS)

- ☐ Truncated dome pattern.
- ☐ Rows of truncated domes aligned perpendicular to the grade break between the curb ramp/landing and the street.
- ☐ Full width of curb ramp/landing connection to the street.
- ☐ Depth: 24-inch minimum.
- ☐ Installed at back of curb.
- ☐ Contrasts with background (light-on-dark or dark-on-light).

DRIVEWAYS

- ☐ Must provide a PAR if the driveway intersects a walkway/sidewalk.

MEDIAN/TRAFFIC ISLAND/SPLITTER ISLAND

All PCP and PAR accessibility criteria apply, in addition to the following:

- ☐ Must provide a PAR connecting to each crosswalk.
- ☐ Each PAR through the island must be 6 feet in length minimum.
- ☐ Provide a passing space at least 5 feet wide for a distance of at least 5 feet for each PAR in a raised median or on a traffic island.
  Note: It is recommended that cut-throughs be designed to have an unobstructed clear width of 5 feet minimum to ensure a passing space is provided.
- ☐ Detectable warning surface is located at each curb ramp or roadway entrance of a PAR through a raised median or traffic island.
- ☐ Detectable warning surfaces are separated by 2 feet minimum length in the direction of pedestrian travel.
- ☐ When the PAR of a shared-use path goes through a raised median or traffic island, the width shall be the same as the width of the shared-use path.

ACCESSIBILITY CRITERIA CHECKLISTS

BUS STOPS

- ☐ Boarding and alighting area provided:
  - ◇ Size: 8 feet minimum (measured perpendicular to the curb/ roadway edge) by 5 feet minimum (measured parallel to the roadway).
  - ◇ Grade: 2% maximum (measured perpendicular to the curb/ roadway edge); match street grade (measured parallel to the roadway).
  - ◇ Connected to streets, sidewalks, or pedestrian paths by a PAR.
- ☐ Bus Shelter (if provided):
  - ◇ Clear space:
    - ○ Entirely within shelter.
  - ◇ 36 inches by 48 inches minimum if constrained on three sides (otherwise, 30 inches by 48 inches minimum).
  - ◇ 2% maximum slope in all directions.
  - ◇ Connected to the boarding and alighting area by a PAR.

PEDESTRIAN PUSH BUTTONS – GENERAL

- ☐ Location (MUTCD figure 4E-3):
  - ◇ Not greater than 5 feet from the crosswalk line (extended) that is farthest from the center of the intersection.
  - ◇ Between 1½ feet and 10 feet from the edge of the curb, shoulder, or pavement.
- ☐ Mounting height:
  - ◇ 42 inches desirable.
  - ◇ 48 inches maximum, 15 inches minimum.
- ☐ Clear space for operable parts provided within reach range of the pedestrian push button:
  - ◇ Clear space is allowed to overlap other PAR elements (i.e., sidewalk/curb ramp landing).
  - ◇ Clear space must be connected to the crosswalk served by the pedestrian push button by a PAR.

PEDESTRIAN PUSH BUTTON – GENERAL (Continued)

- ◇ Dimensions: 30 inches minimum (design wheelchair user width) by 48 inches minimum (design wheelchair user length).

  Notes:

  - ○ Additional maneuvering space may be required if the clear space is constrained on three sides (see 2005 PROWAG).
  - ○ A desirable approach to accommodate the full spectrum of wheeled mobility device users approaching the pedestrian push button from multiple directions is to provide 36 inches width by 84 inches length, designed for a parallel approach with the pedestrian push button centered within the length (REF: 2010 Anthropometric study data from University of Buffalo).
- ◇ Grade: 2% maximum running and cross slopes.
- ◇ Reach ranges from clear space:
  - ○ Clear Space designed for a parallel approach:
    - Δ 10 inches maximum if pedestrian push button mounting height is between 46 inches and 48 inches.
    - Δ 10 inches or less desirable (24 inches maximum) if pedestrian push button mounting height is 46 inches or less.

    Note:

    Study data shows that fewer than one-third of wheeled mobility device users can reach sideways to an object mounted 24 inches laterally from the edge of the clear space. Design for 10 inches or less reach range whenever possible.
  - ○ Clear Space designed for a forward approach:
    - Δ Zero inches maximum.

    Note:

    Study data shows that fewer than half of wheeled mobility device users can reach forward to an object mounted at the very edge of the clear space. Design clear space for a parallel approach whenever possible.

See MUTCD section 4E.08 for further guidance.

ACCESSIBILITY CRITERIA CHECKLISTS

PEDESTRIAN PUSH BUTTONS and ACCESSIBLE PEDESTRIAN SIGNALS (APS)

All the preceding general pedestrian push button accessibility criteria apply, in addition to the following:

- APS push buttons shall have a locator tone that operates during the DON'T WALK and the flashing DON'T WALK intervals only.
- APS push buttons must have both audible and vibrotactile indications of the WALK interval.
- APS pushbutton control faces shall be installed to face the intersection and be parallel to the crosswalk served.
- An APS push button shall have a tactile arrow that indicates the crossing direction activated by the button:
  - ◇ An APS push button is aligned parallel to the direction of travel in the associated crosswalk.
  - ◇ An APS push button provides high contrast (light-on-dark or dark-on-light) against its housing.
- If extended push button press features are available, the APS push button shall be marked with three braille dots forming an equilateral triangle in the center of the push button.
- If additional crossing time is provided by an extended push button press feature, then an R10-32P (MUTCD) plaque shall be mounted adjacent to or integral with the APS pushbutton.
- If the pedestrian clearance time is sufficient only to cross from the curb or shoulder to a median to wait for the next cycle, then an additional APS push button shall be provided in the median.
- Spacing: 10 feet minimum between APS push buttons (5 feet minimum on medians and islands), if feasible.
- Effect of spacing:
  - ◇ 10 feet or greater: Audible WALK indication shall be a percussive tone.
  - ◇ Less than 10 feet: Audible WALK indication shall be a speech walk message, and a speech push button information message shall be provided.
- See MUTCD sections 4E.08, 4E.09, 4E.10, 4E.11, 4E.12, and 4E.13 for further guidance.

ACCESSIBILITY CRITERIA CHECKLISTS

ALTERNATE PEDESTRIAN CIRCULATION PATH (APCP) (WORK ZONE)

- Alternate pedestrian circulation path (APCP) requirements apply when pedestrians are diverted off the existing pedestrian circulation path network due to blockage from construction or maintenance activities.
- The APCP must contain a continuous accessible route that meets PAR requirements to the maximum extent feasible.
- The APCP shall be provided on the same side of the street as the blocked pedestrian circulation path, if feasible.
- Continuous cane-detectable pedestrian channelization in the form of barricades, longitudinal channelizing devices, and detectable edging shall be provided on both sides of the APCP from the point where pedestrian traffic is diverted from the existing pedestrian circulation path network to the point where they are returned to the existing network.
- Barricades, longitudinal channelization devices, and detectable edging shall conform to MUTCD sections 6F.63, 6F.68, 6F.70, 6F.71, 6F.73, and 6F.74.
- Sidewalk closures shall conform to MUTCD section 6D.02.
- See MUTCD sections 6D.01 and 6D.02 for further guidance.

PEDESTRIAN DETOUR ON EXISTING PEDESTRIAN CIRCULATION PATHS (WORK ZONE)

- Pedestrian detour requirements apply when an existing pedestrian circulation path is blocked by construction or maintenance activities and pedestrians are detoured around the work zone using the existing pedestrian circulation path network.
- Sidewalk closures shall conform to MUTCD section 6D.02.
- The pedestrian detour should have an equivalent level of accessibility as the route being detoured from.
  - ◇ Incorporate temporary curb ramps, detectable warning surfaces, and pedestrian push buttons into the pedestrian detour as needed to provide equivalent accessibility.
- See MUTCD sections 6D.01 and 6D.02 for further guidance.

PEDESTRIAN CIRCULATION PATH (PCP)

Pedestrian circulation path: A prepared exterior or interior way of passage provided for pedestrian travel. Includes independent walkways, shared-use paths, sidewalks, and other types of pedestrian facilities. All pedestrian circulation paths are required to contain a continuous pedestrian access route that connects to all adjacent pedestrian facilities, elements, and spaces that are required to be accessible.

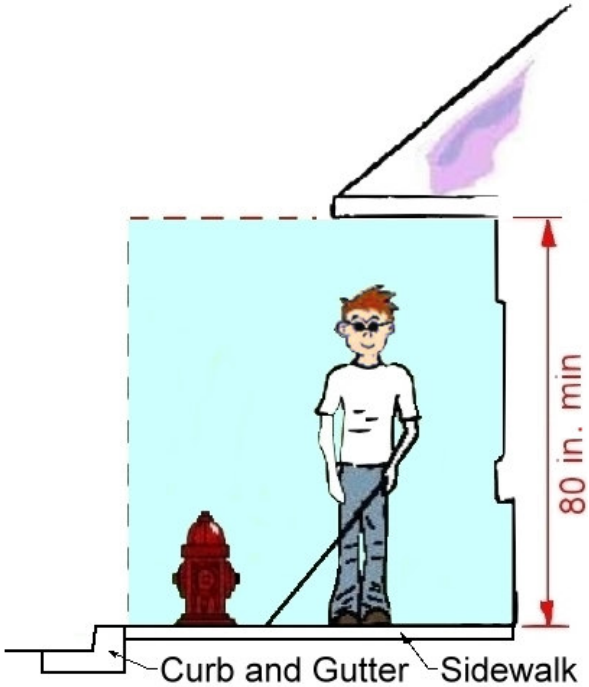

Figure 1

Width: Pedestrian circulation path (sidewalk/walkway) width is measured from the back of the curb (or continuous buffer, if present) to the outside edge of the sidewalk.

Required clearance: The minimum vertical clearance shall be 80 inches. The MUTCD requires the minimum height for the bottom of signs to be 84 inches. The required clear area must be maintained without obstruction.

PROTRUDING OBJECTS/OBSTRUCTIONS

Protruding objects: Provisions for protruding objects apply across the entire width of the pedestrian circulation path. Protruding objects on pedestrian circulation paths (sidewalks/walkways) shall not reduce the clear width required for pedestrian access routes.

Protrusions/obstructions can be permanent or temporary mounted or free-standing objects. Examples are: utility poles; sign supports; tree~~s~~ limbs; vegetation; fire hydrants; cabinets; mail boxes; phone booths; temporary stands/signs; water fountains; stairs; furniture; guy wires; signs; wall phones; and parked car overhangs.

Protrusion limits: Objects with leading edges between 27 inches and 80 inches above the finished ground surface may protrude a maximum of 4 inches horizontally into the pedestrian circulation path.

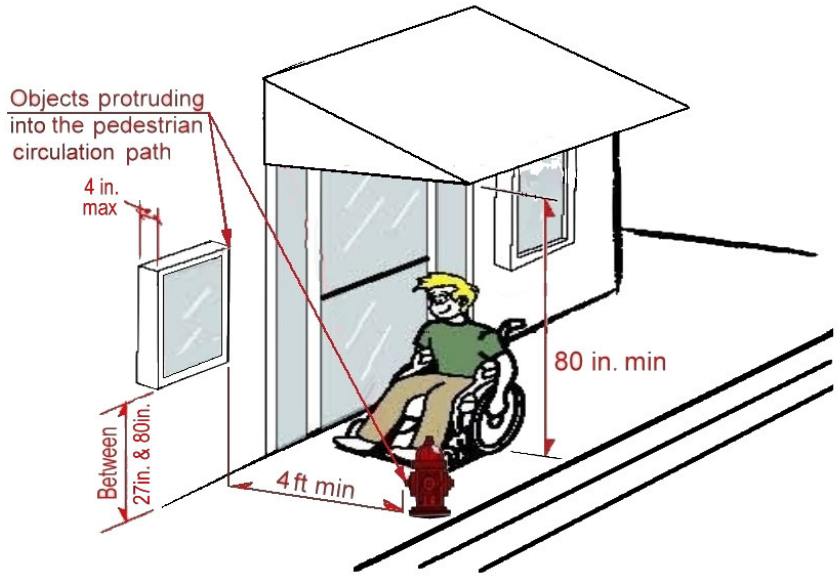

Figure 2

Post-mounted objects: Objects mounted on single posts or pylons between 27 and 80 inches (84 inches for signs) above the ground surface may overhang into the pedestrian circulation path a maximum of 4 inches beyond the post or pylon measured 6 inches above the ground surface.

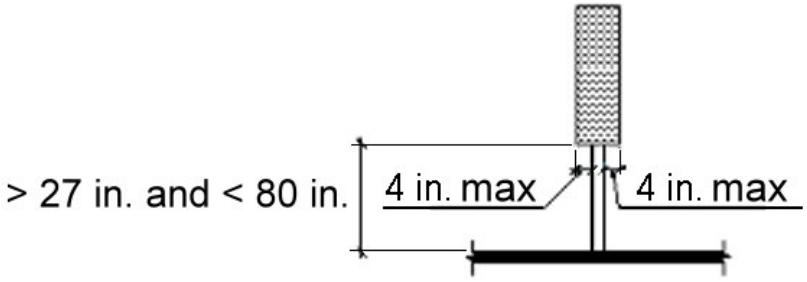

Figure 3

Where an object is mounted between posts or pylons that are spaced more than 12 inches apart, the lowest edge of the sign or object must be either 27 inches maximum or more than 80 inches minimum (84 inches for signs) above the ground line.

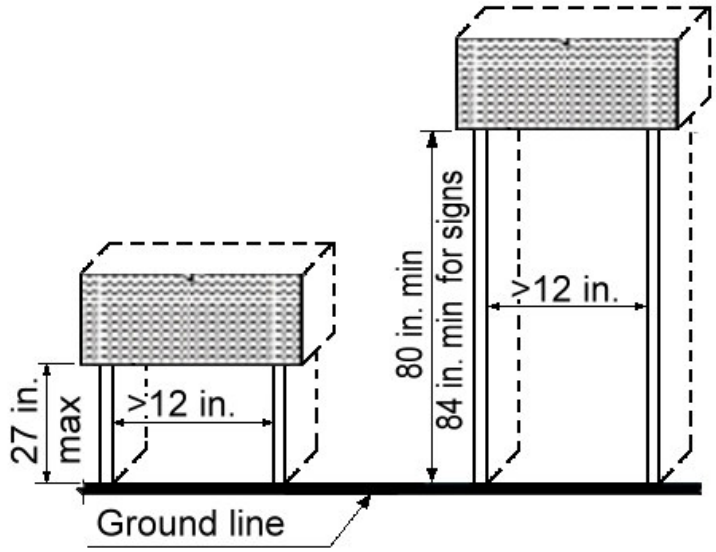

Figure 4

PEDESTRIAN ACCESS ROUTE (PAR)

Pedestrian access route: A continuous, unobstructed walkway within a pedestrian circulation path that provides accessibility.

Pedestrian access routes consist of one or more of the following pedestrian facilities: Walkways/sidewalks, curb ramps (excluding flares), landings, crosswalks, pedestrian overpasses/underpasses, access ramps, elevators, and platform lifts.

Continuous width: The minimum continuous and unobstructed clear width of a pedestrian access route shall be 4 feet, not counting the width of the curb.

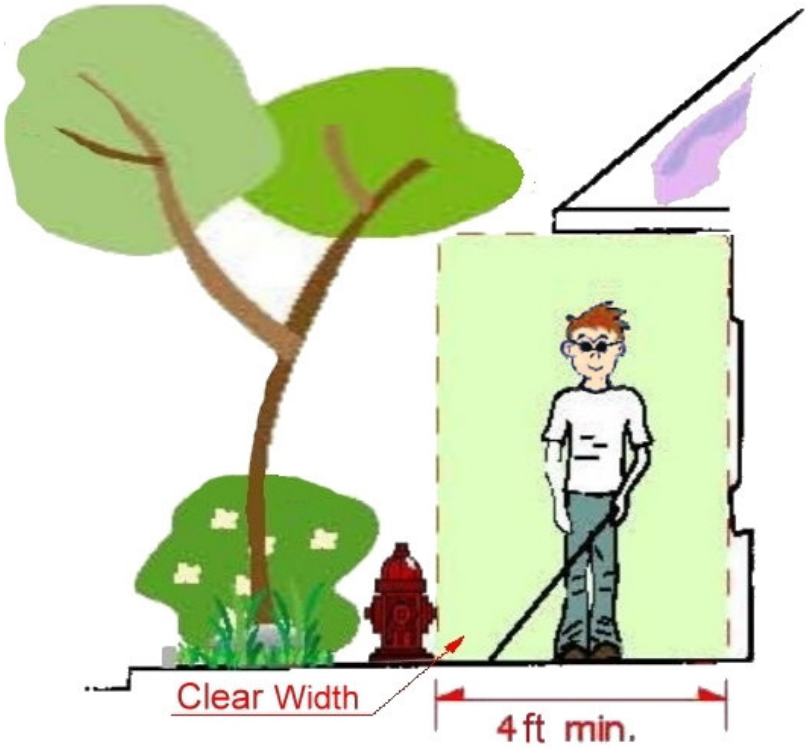

Figure 5

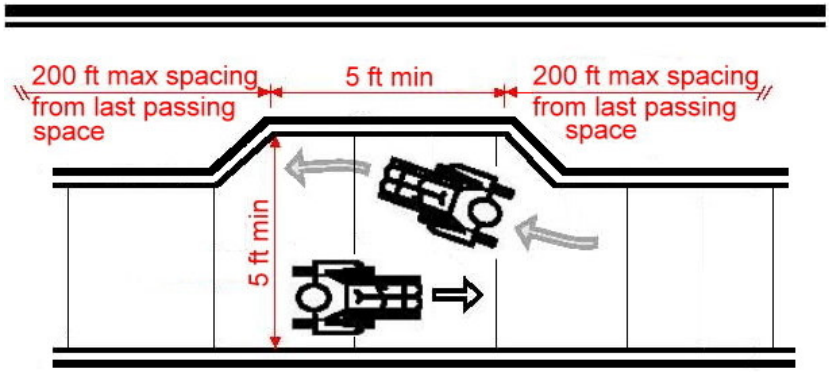

Figure 6

Width at passing spaces: Pedestrian access routes less than 5 feet clear width shall provide passing spaces at intervals of 200 feet maximum. The minimum dimension of pedestrian access routes at passing spaces shall be 5 feet wide for a distance of 5 feet.

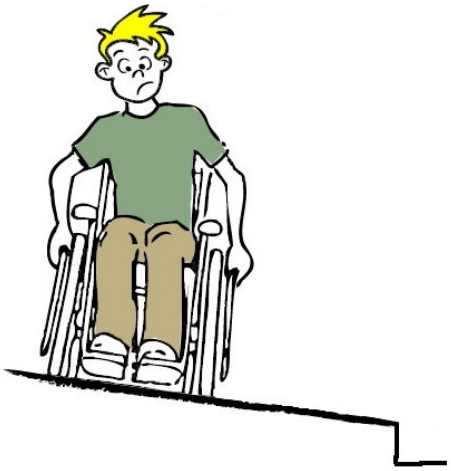

Figure 7

Cross slope: The cross slope of a pedestrian access route shall be 2.0% maximum.

Running slope: Where a pedestrian access route is within a street or highway right of way, its grade shall not exceed the general grade of the adjacent street or highway. Where a pedestrian access route is not located in a street or highway right of way, its grade shall not exceed 5.0% (unless it is designed as a ramp).

ACCESS ROUTE SURFACE ELEMENTS

Access route surface: The surface of the pedestrian access route shall be firm, stable, and slip resistant.

Figure 8

Vertical alignment: Vertical alignment of pedestrian access routes shall be planar within curb ramps, landings, and gutter areas, and within required clear spaces for operable parts. Grade breaks must be flush.

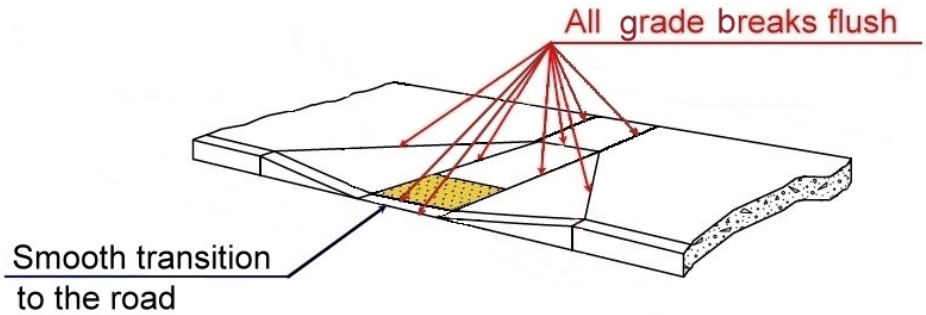

Figure 9

Vertical discontinuities: Vertical discontinuities shall not exceed ¼ inch maximum. Vertical discontinuities between ¼ inch and ½ inch maximum shall be beveled at 2H:1V or flatter. The bevel shall be constant across the entire level change. New surfaces shall not have any vertical surface discontinuities.

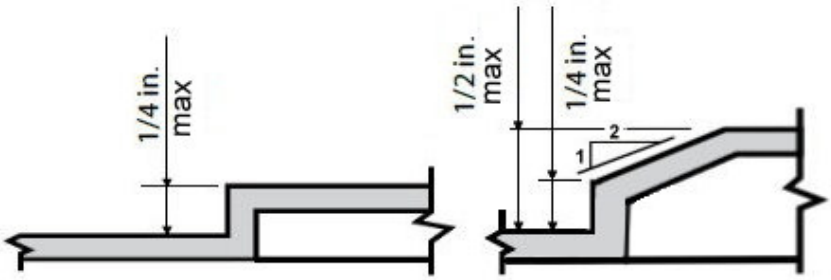

Figure 10

Pedestrian access route joints & gratings: Horizontal surface openings shall not permit passage of a sphere more than ½ inch diameter. Horizontal grate openings shall be placed so that the long dimension is perpendicular to the dominant direction of wheelchair travel.

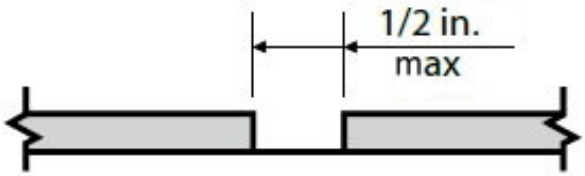

Figure 11

Note: Vertical discontinuities and horizontal surface openings are not allowed in curb ramps, landings, gutter areas within the PAR, or required clear spaces.

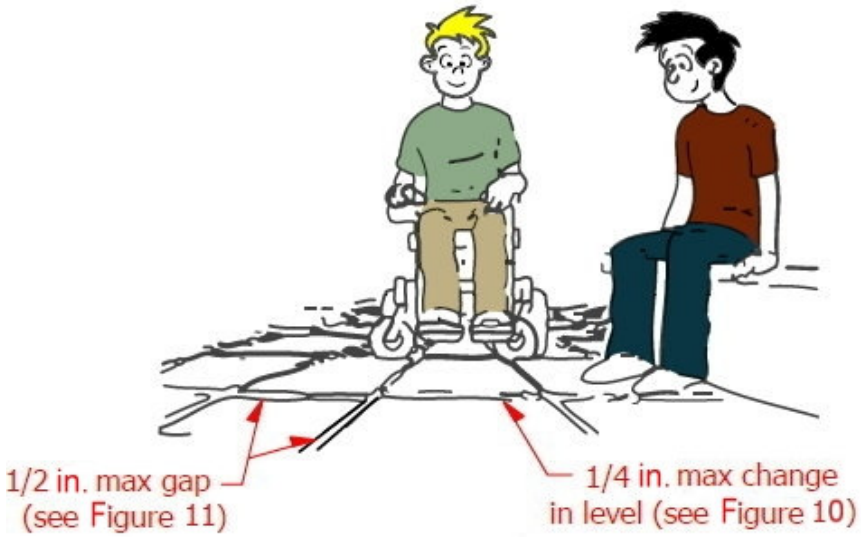

Figure 12

Grate openings:

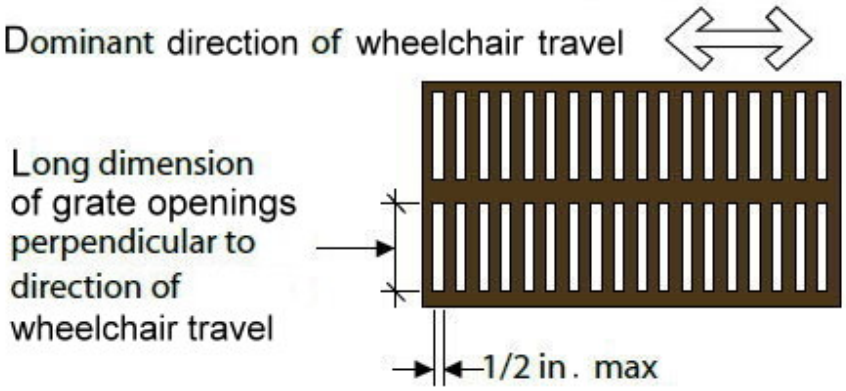

Figure 13

Railroad crossings: Railroad crossings shall be level with top of the rail.
Flangeway gaps: The space between the inner edge of a rail and the crossing surface. There are two different criteria for flangeway gaps:

- **Light rail crossing** flangeway gaps shall be 2½ inches maximum.
- **Freight rail crossing** flangeway gaps shall be 3 inches maximum.

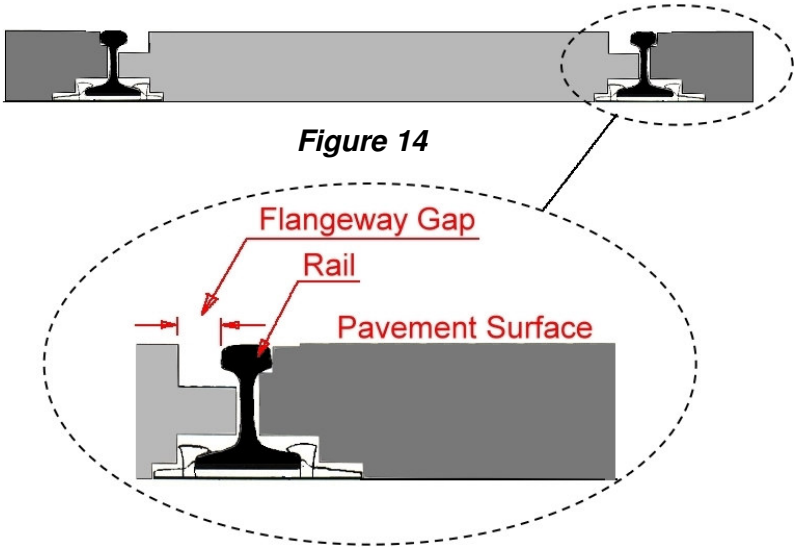

Figure 14

Examples of noncompliant surfaces: Split-face stone units, cobble-stones, loose sand, dirt, gravel, or any similar irregular surfaces.

Figure 15

CURB RAMPS

Perpendicular type curb ramp

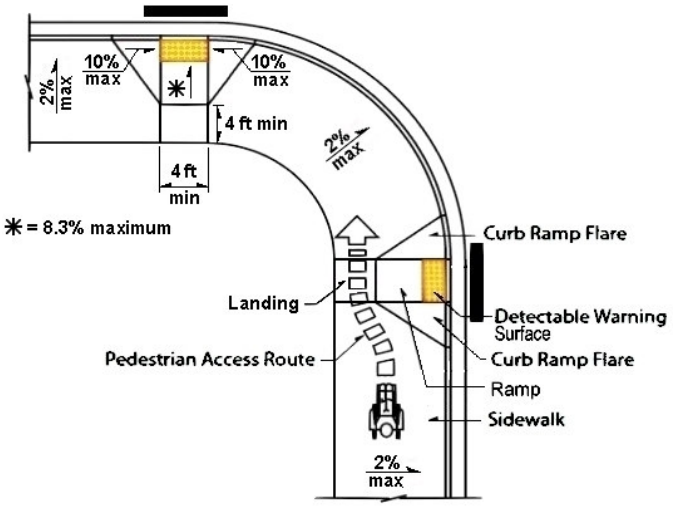

Figure 16

Perpendicular type curb ramps shall have a running slope that cuts through or is built up to the gutter grade break at right angles.

Ramp running slopes shall be 8.3% maximum.

Ramp cross slopes shall be 2.0% maximum. The cross slope at midblock crossings shall be permitted to match street or highway grade.

Landing: A landing of 4 feet by 4 feet minimum (5 feet by 5 feet desirable) shall be provided at the top of the curb ramp and shall be permitted to overlap other landings and clear space. Running slopes and cross slopes shall be 2.0% maximum. Running slopes and cross slopes at midblock crossings may match the street or highway grade.

Flares: Flared sides with a slope of 10% maximum, measured parallel to the curb line, are needed when a pedestrian circulation path crosses the curb ramp from the side.

Parallel type curb ramp

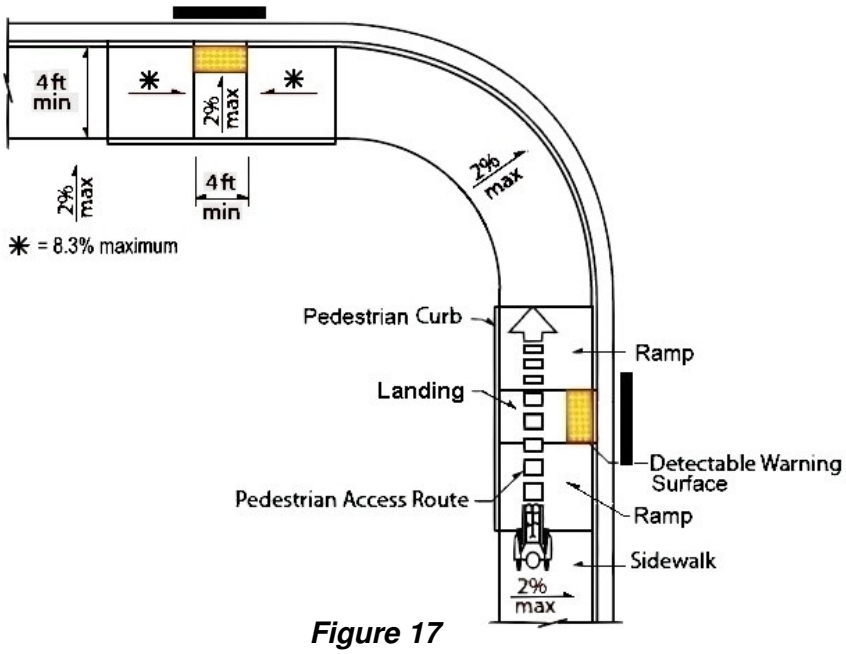

Figure 17

Parallel type curb ramps shall have ramp running slopes that are in-line with the direction of sidewalk travel.

Ramp running slopes shall be 8.3% maximum (the ramp length is not required to exceed 15 feet along the sidewalk).

Ramp cross slopes shall be 2.0% maximum.

Landing: A landing of 4 feet by 4 feet minimum (5 feet by the width of the sidewalk is desirable) shall be provided between the ramps and shall be permitted to overlap other landings and clear floor or ground space. The running slopes and cross slopes shall be 2.0% maximum. Running slopes and cross slopes at midblock crossings may match the street or highway grade.

Combination type curb ramp

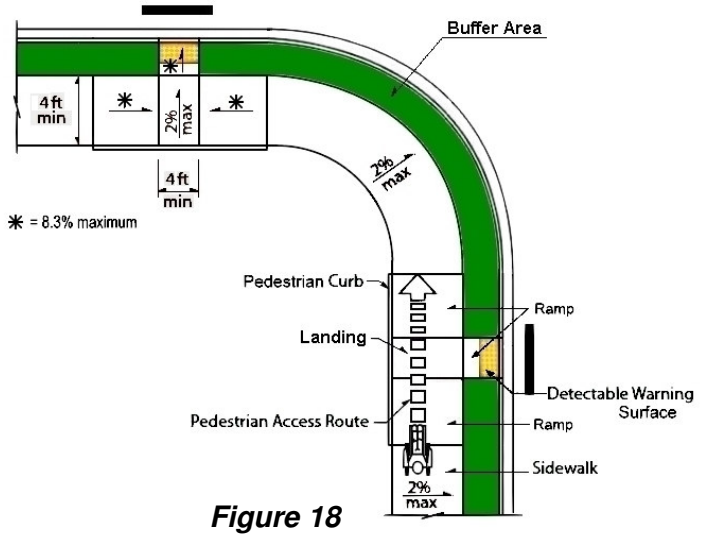

Figure 18

Combination type curb ramps can be configured with many different layouts. The example shown has a ramp running slope that connects the gutter elevation to the landing elevation perpendicular to the curb line, then ramps in both directions parallel to the curb line that connects the landing elevation to the sidewalk elevation.

Ramp running slopes shall be 8.3% maximum (the ramp length is not required to exceed 15 feet along the sidewalk).

Ramp cross slopes shall be 2.0% maximum. The ramp cross slope at midblock crossings shall be permitted to match the street or highway grade.

Landing: A landing of 4 feet by 4 feet minimum (5 feet by 5 feet desirable) shall be provided at the top of each perpendicular ramp and at the bottom of each parallel ramp (as applicable based on the specific combination type curb ramp layout) and shall be permitted to overlap other landings and clear space. Running slopes and cross slopes shall be 2.0% maximum. The running slopes and cross slopes at midblock crossings may match the street or highway profile grade.

Single-direction parallel type curb ramp

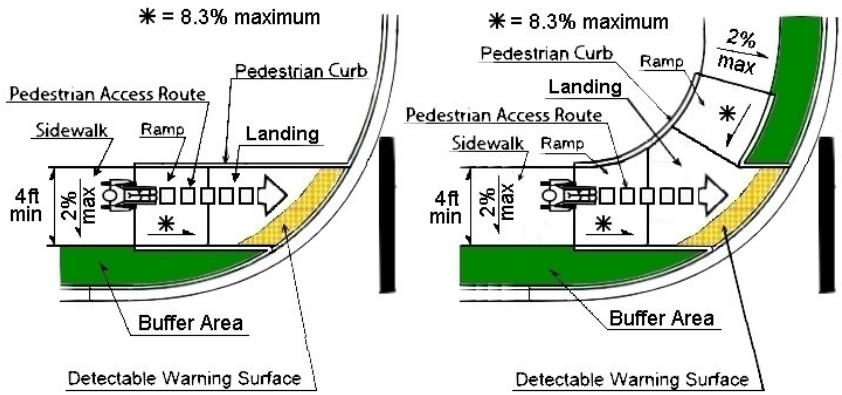

Figure 19

Single-direction parallel type curb ramps shall have a running slope that is in-line with the direction of sidewalk travel.

Ramp running slopes shall be 8.3% maximum (the ramp length is not required to exceed 15 feet along the sidewalk).

Ramp cross slopes shall be 2.0% maximum.

Landing: A landing of 4 feet by 4 feet minimum (5 feet by 5 feet or larger desirable) shall be provided at the bottom of the ramp run and shall be permitted to overlap other landings and clear space. The running slopes and cross slopes shall be 2.0% maximum.

Diagonally-oriented parallel type curb ramp

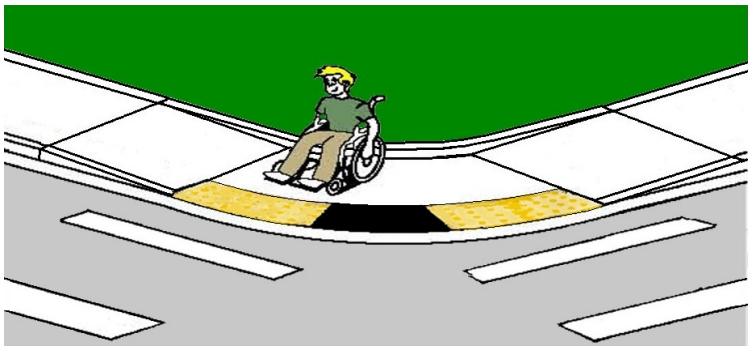

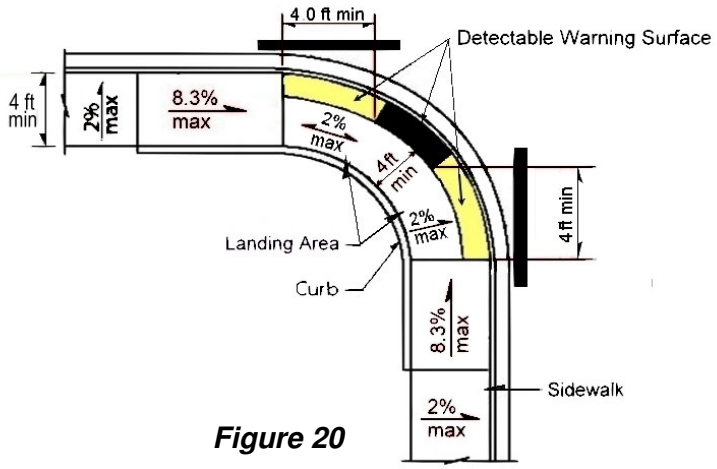

Figure 20

Ramp running slopes shall be 8.3% maximum (the ramp length is not required to exceed 15 feet along the sidewalk).

Ramp cross slopes shall be 2.0% maximum.

Landing: 4 feet by 4 feet minimum (5 feet by 5 feet or larger desirable). Running slopes and cross slopes shall be 2.0% maximum.

Continuous detectable warning surface: The central section of the detectable warning surface must not be omitted. It must be continuous across the entire connection to the street. The intent of the black central section of detectable warning surface is to provide directionality for people with vision difficulties.

CURB RAMP TRANSITIONS

Clear space: Clear space 4 feet by 4 feet minimum (contained within the width of the crosswalk and located outside the parallel vehicle travel lane) must be provided in the roadway beyond the curb face where the bottom of a curb ramp or landing meets the gutter.

Counter slope: Consider a 2-foot level strip at the grade break of the road and ramp if the algebraic difference between the pavement slope and the ramp slope is more than or equal to 11%.

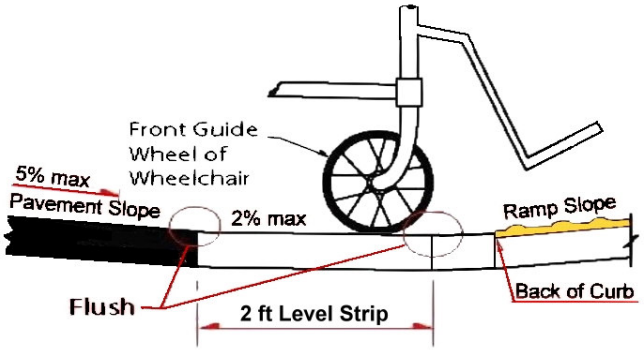

Figure 21

DETECTABLE WARNING SURFACES (DWS)

Detectable warning surfaces shall be provided where a curb ramp, landing, or shared-use path connects to a street, and where the pedestrian accessible route crosses a railroad, traffic island, or median.

Placement: Detectable warning surfaces shall be placed at the back of curb.

Size: Detectable warning surfaces extend 2 feet minimum in the direction of travel and the full width of the curb ramp (exclusive of flares) or the landing.

Color: WSDOT requires the use of federal yellow (Number 595C, #33538) as the visual contrast on its projects. Other contrasting colors may be used on projects where cities or counties have jurisdiction.

DETECTABLE WARNING SURFACE DETAIL

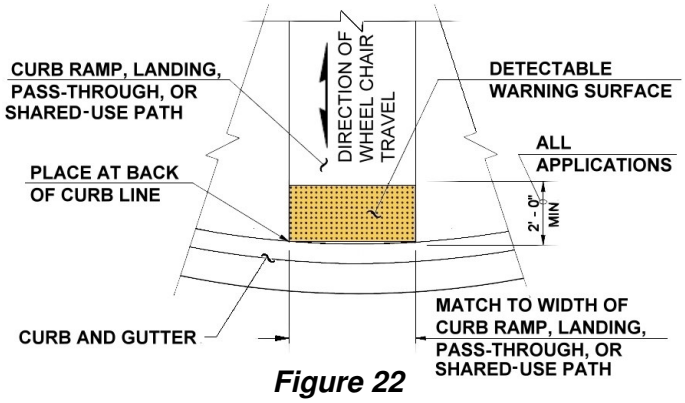

Figure 22

SINGLE-DIRECTION CURB RAMP

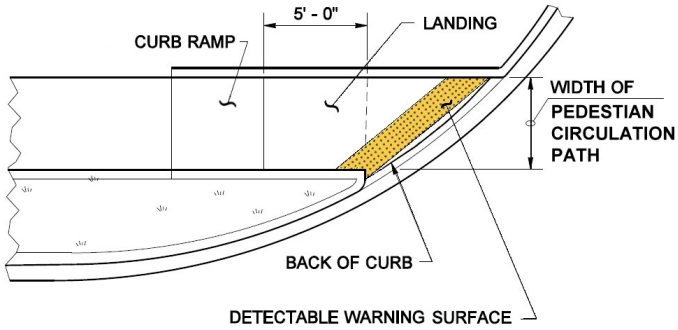

Figure 23

PARALLEL CURB RAMP

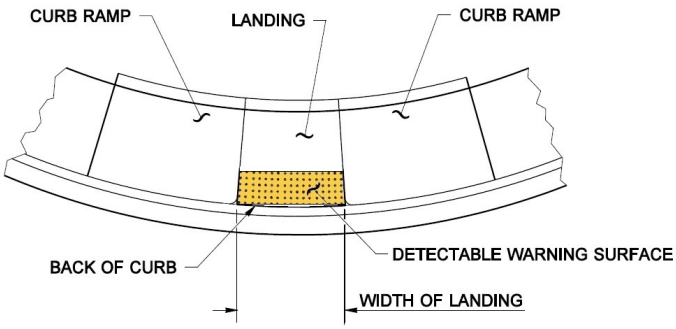

Figure 24

PEDESTRIAN RAILROAD CROSSING

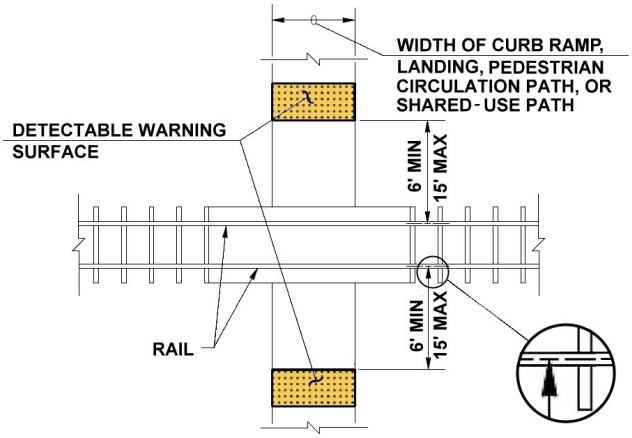

Figure 25

SHARED-USE PATH CONNECTION

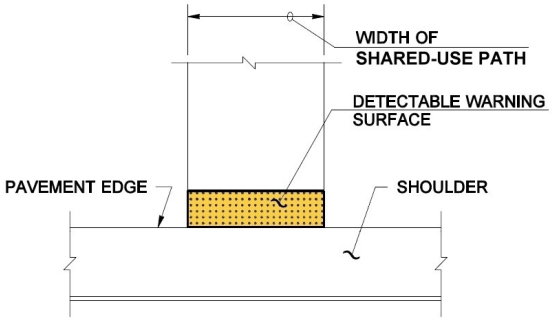

Figure 26

ISLAND PASS-THROUGH

MEDIAN PASS-THROUGH

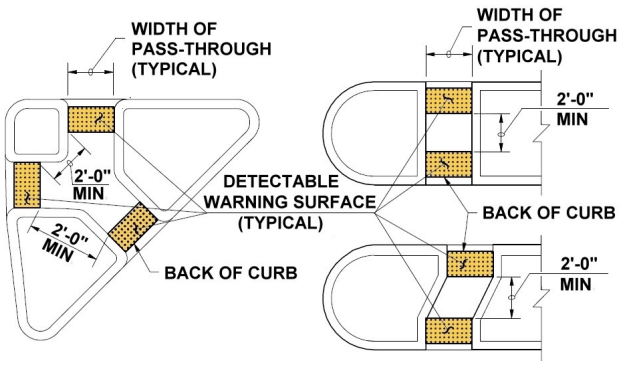

Figure 27

PEDESTRIAN PUSH BUTTONS AND ACESSIBLE PEDESTRIAN SIGNALS (APS)

Pedestrian push buttons: By the Americans with Disabilities Act (ADA) definition, pedestrian push buttons are operable parts that must be installed to be accessible to and usable by people with disabilities. As such, several accessibility criteria apply to pedestrian push button installations, including location, mounting height, provision of a level clear space for operable parts within reach range of the button, and potentially additional maneuvering space (dependent on site-specific conditions). See the accessibility criteria checklist for PEDESTRIAN PUSH BUTTONS – GENERAL at the front of this guide for specific requirements and guidance.

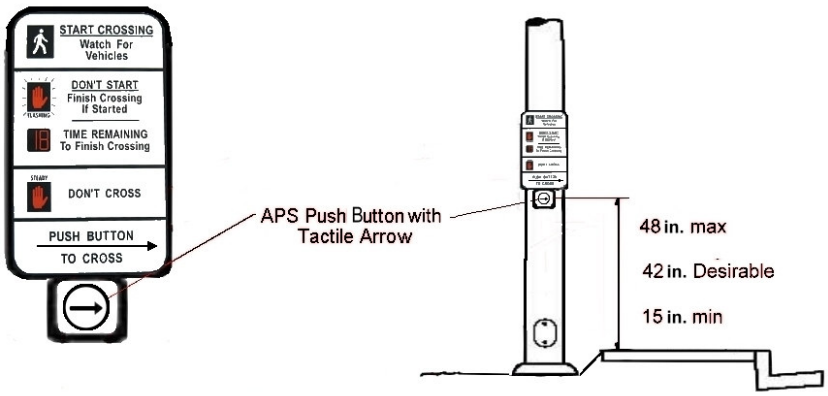

Figure 28

Accessible pedestrian signals (APS): It is current WSDOT policy that APS be installed whenever a pedestrian signal system is newly installed, replaced, or significantly modified. It is Federal Highway Administration policy that all state and local agencies under its oversight have a reasonable and consistent policy in place for providing APS. Recent litigation history indicates that state and local agencies should also take a proactive stance in addressing requests by the public for APS installations.

When the *Public Rights-of-Way Accessibility Guidelines* are finalized and incorporated into either or both of the federal regulations administered by the United States Department of Transportation (USDOT) (Section 504 of the Rehabilitation Act) and United States Department of Justice (USDOJ) (Title II of the ADA), it will become a legally enforceable requirement that APS be installed whenever a pedestrian signal system is newly constructed or altered. See the accessibility criteria checklist for PEDESTRIAN PUSH BUTTONS – ACCESSIBLE PEDESTRIAN SIGNALS (APS) at the front of this guide for specific requirements and guidance.

CROSSWALKS

Crosswalks are marked or unmarked pedestrian roadway crossings that exist at all the legs of an intersection (unless signed as a prohibited crossing). Crosswalks connect designated pedestrian access routes (such as sidewalks, shoulders, or pathways) on opposite sides of a roadway.

Crosswalks must meet the accessibility criteria for pedestrian circulation paths and pedestrian access routes. See the applicable checklists at the beginning of this guide.

DRIVEWAYS

Design: There are four basic approaches to designing driveway cuts that meet ADA requirements. The most important element of these solutions is to provide a continuous clear pedestrian access route (PAR) with a minimum width of 4 feet. The running slope may match the roadway grade.

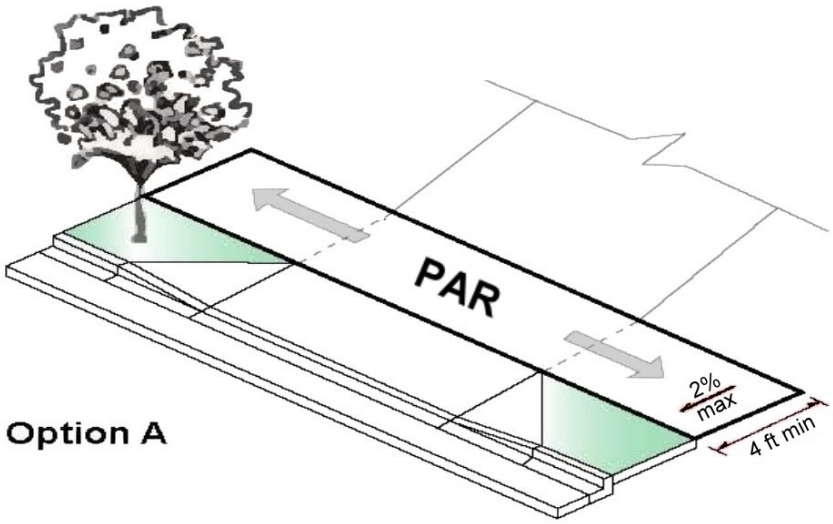

Figure 29

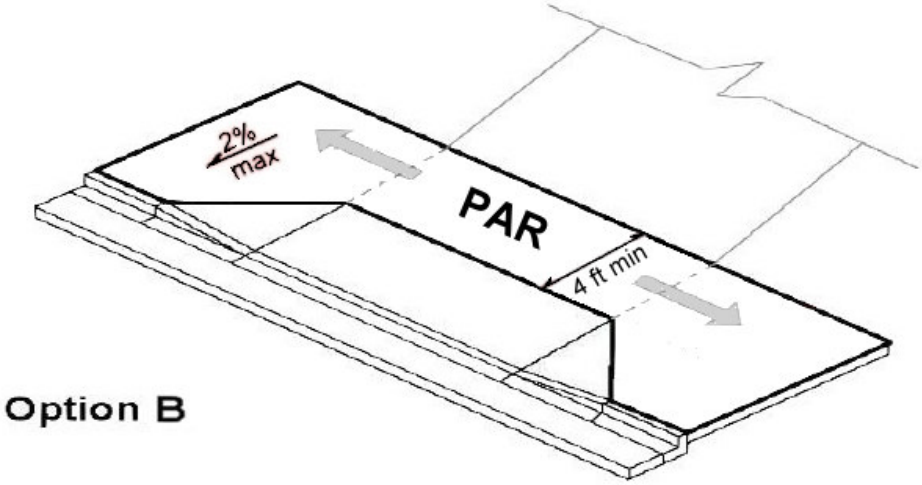

Figure 30

DRIVEWAYS

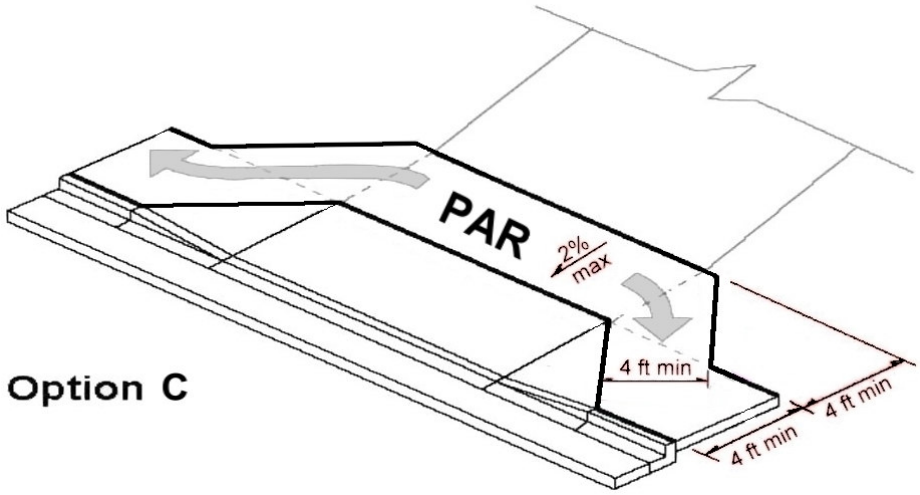

Figure 31

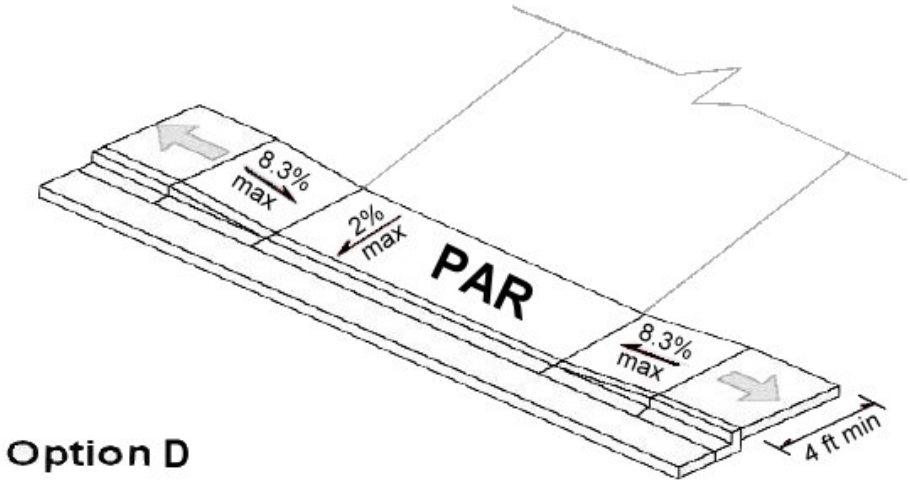

Figure 32

BUS STOPS

Bus Boarding & Alighting Areas

Surface: Bus stop boarding & alighting areas shall have a firm, stable, and slip-resistant surface.

Dimensions: Bus stop boarding & alighting areas shall provide clear minimum dimensions of 8 feet deep and 5 feet wide.

Connection: Bus stop boarding & alighting areas shall be connected to streets, sidewalks, or pedestrian paths by an accessible route.

Slope: The slope parallel to the roadway shall be the same grade as the roadway. The slope perpendicular to the roadway shall not be steeper than 2.0%.

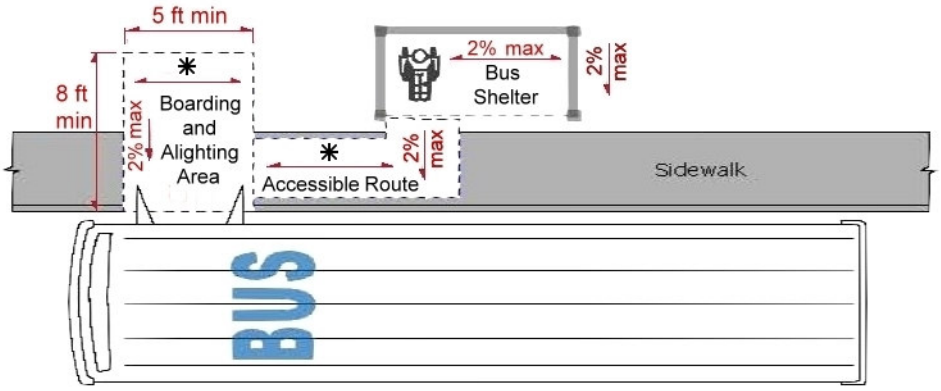

* Slope may be the same as the roadway

Figure 33

ALTERNATE PEDESRIAN CIRCULATION PATHS AND PEDESTRIAN DETOURS

Alternate pedestrian circulation paths and pedestrian detours are provided for temporary closure of pedestrian circulation paths due to maintenance or construction activities.

Alternate pedestrian circulation path requirements apply when pedestrians are diverted off the existing pedestrian circulation path network, while pedestrian detour requirements apply when pedestrians are detoured around the work zone using the existing pedestrian circulation path network.

See the applicable accessibility criteria in the work zone checklists at the front of this guide for requirements and guidance.

Figure 34

Washington State Department of Transportation

Field Guide for Accessible Public Rights of Way
Published and maintained by:
Washington State Department of Transportation

For questions, you may contact:
WSDOT Headquarters Design Office
310 Maple Park Avenue SE
PO Box 47329
Olympia, Washington 98504-7329
http://www.wsdot.wa.gov/Design/Roadside/RoadsideADA.htm

Americans with Disabilities Act (ADA) Information
Materials can be provided in alternative formats by calling the ADA Compliance Manager at 360-705-7097. Persons who are deaf or hard of hearing may contact that number via the Washington Relay Service at 7-1-1.

This publication has been adopted from and with the permission of the Nevada Department of Transportation and the Idaho Transportation Department. We thank them for their assistance.

The Field Guide is intended as a reference to be used by professionals when evaluating accessible pedestrian features in public rights of way. Also, reference the WSDOT Design Manual, Chapter 1510.

The content of this guide is based on the "Revised Draft Guidelines for Accessible Public Rights-of-Way" (U.S. Access Board, 2005), "Manual on Uniform Traffic Control Devices" (Federal Highway Administration, 2009), "Guide for the Planning, Design, and Operation of Pedestrian Facilities" (American Association of State Highway and Transportation Officials, 2004), and Washington State Department of Transportation design criteria. Users are cautioned that transportation design, with its associated safety policy, criteria, and technology, is a rapidly changing field of study and is site-specific.

November 1, 2012