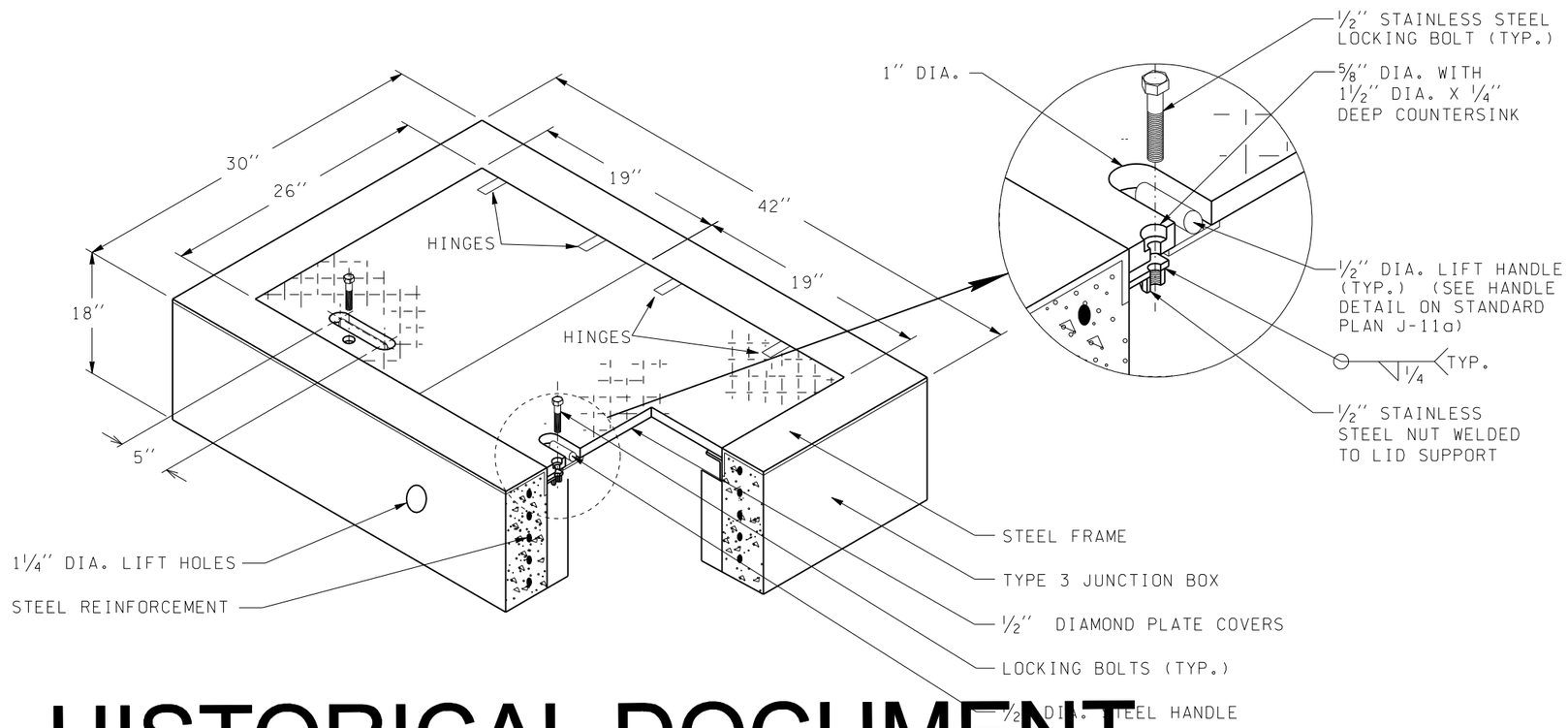

HISTORICAL DOCUMENT
FOR VIEWING PLEASURE ONLY!
FOR STANDARD DUTY, USE TYPE 8
FOR HEAVY DUTY APPLICATION, USE TYPE 6

TYPE 3 JUNCTION BOX (DUAL LID)

TYPE 3 JUNCTION BOXES SHALL MEET ALL SPECIFICATIONS ON STANDARD PLAN J-1c WITH THE EXCEPTION OF THE BOX DEPTH AND LID WHICH SHALL BE AS SHOWN ON THIS DETAIL. THE HINGES SHALL ALLOW THE LID TO OPEN 180°. WHEN CLOSED NO PARTS SHALL PROJECT ABOVE THE LID OR STEEL FRAME.

(NOT TO SCALE)

		2-26-97	DELETE WORD "MODIFIED"	BK	REGION NO.	STATE	FED.AID PROJ.NO.	ENVIRONMENTAL AND ENGINEERING SERVICE CENTER	Washington State Department of Transportation	(ENGLISH) WITH LOCKING BOLT	6.01E
		3-25-97	LOCKING BOLT DETAIL	BK	10	WASH					
DESIGNED BY WSDOT		4-29-97	TEXT	BK	JOB NUMBER						SHEET OF SHEETS
ENTERED BY WSDOT		3-12-98	TEXT	BK							
CHECKED BY WSDOT		5-12-98	TEXT	JH							
PROJ. ENGR.					CONTRACT NO.					TYPE 3 J BOX (DUAL LID)	
REGIONAL ADM.											
	DATE	DATE	REVISION	BY							

PLOT1 S:\41\0726\Electrical\MASTER_FILES\DETAILS Homepage\jb3mod.dgn