H² PRE-CAST INC.
CONCRETE PRODUCTS

4919 CONTRACTORS DRIVE
EAST WENATCHEE, WA 98802
(509) 884-6644

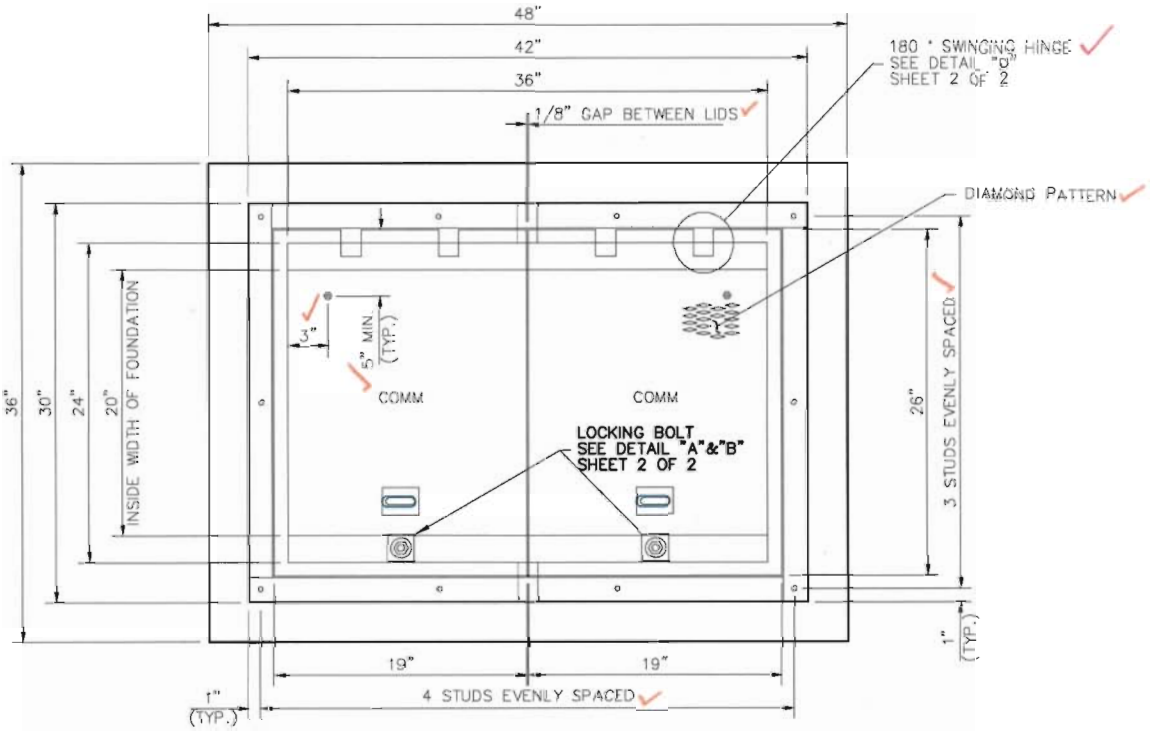

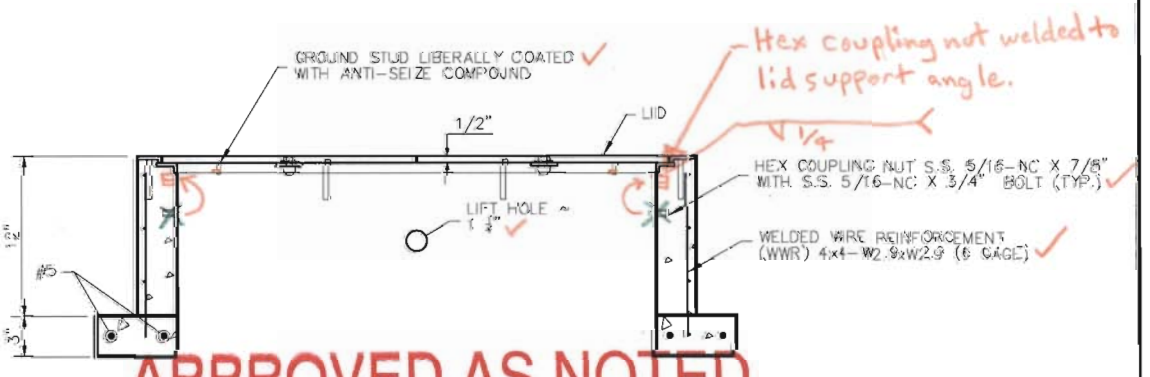

APPROVED AS NOTED
Washington State
Department of Transportation
HQ Traffic Operations Office
DATE November 15, 2006 TAT

WSDOT TYPE 7 JUNCTION BOX SHEET 1 OF 2

H2 PRE-CAST INC.
CONCRETE PRODUCTS

4919 CONTRACTORS DRIVE
EAST WENATCHEE, WA 98802
(509) 884-6644

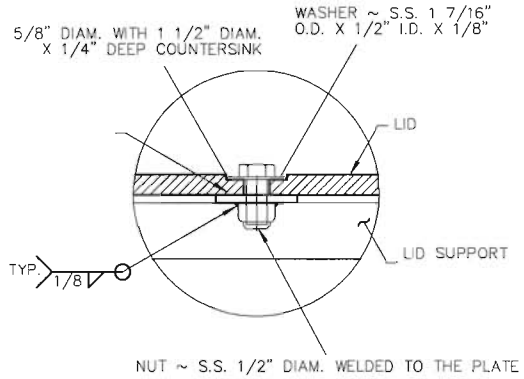

DETAIL "A"

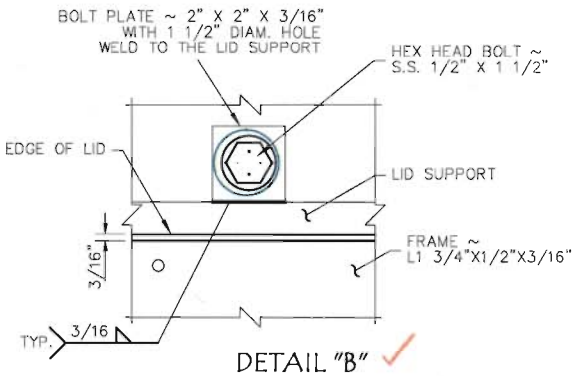

DETAIL "B"

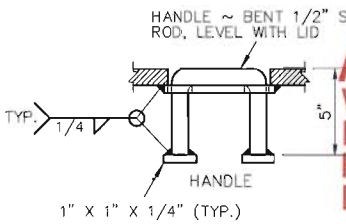

APPROVED AS NOTED
Washington State
Department of Transportation
HQ Traffic Operations Office
DATE November 15, 2006 TAT

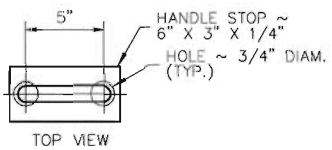

DETAIL "C"

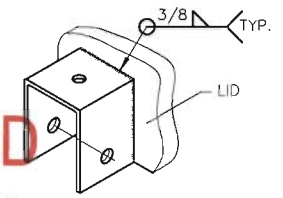

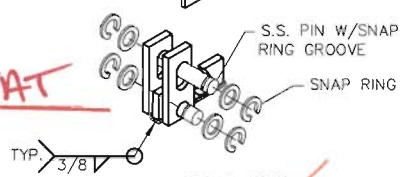

DETAIL "D"

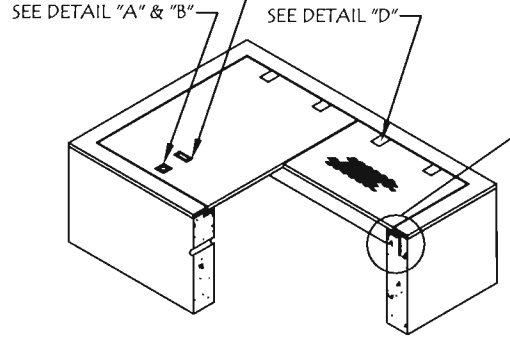

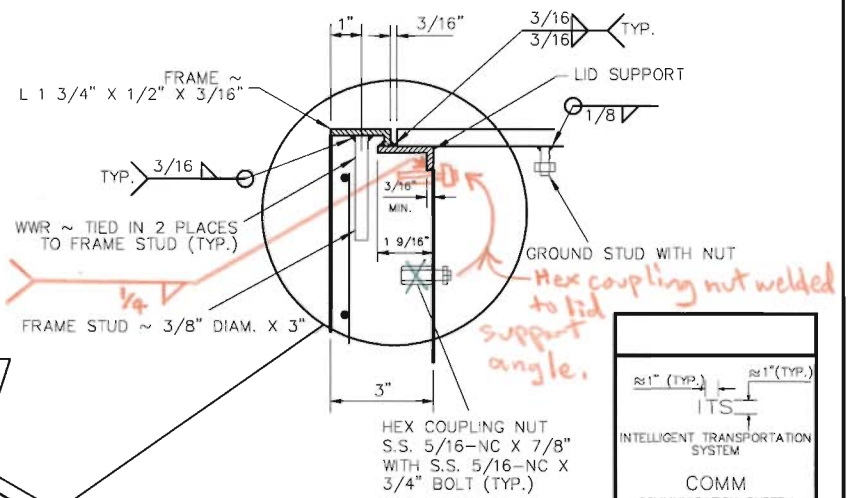

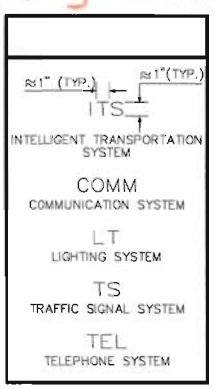

WSDOT TYPE 7 JUNCTION BOX SHEET 2 OF 2