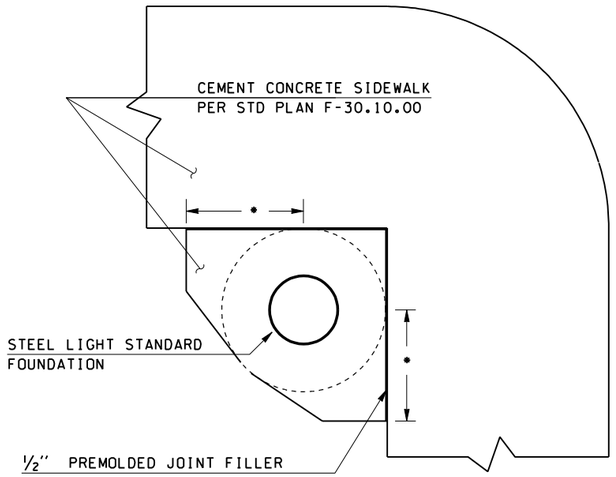

* 2' FOR 3' DIA. FOUNDATION
2'-6" FOR 4' DIA. FOUNDATION

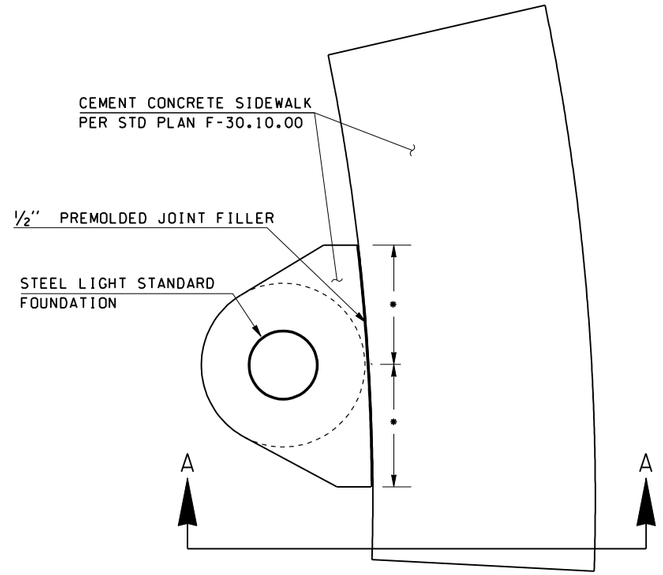

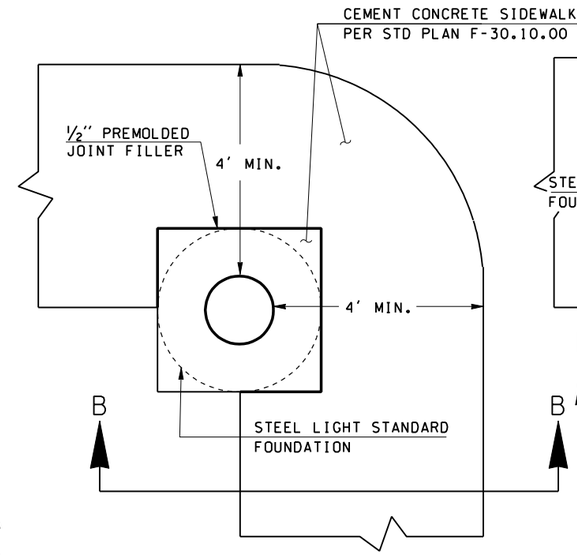

FOUNDATION PARTIALLY WITHIN SIDEWALK SECTION

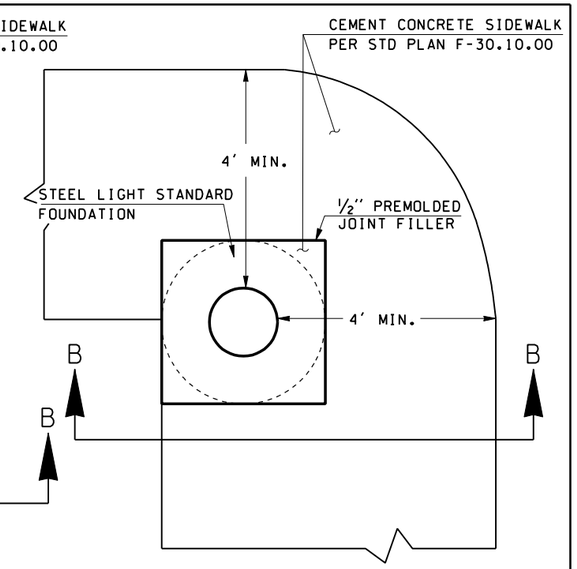

FOUNDATION WITHIN SIDEWALK SECTION

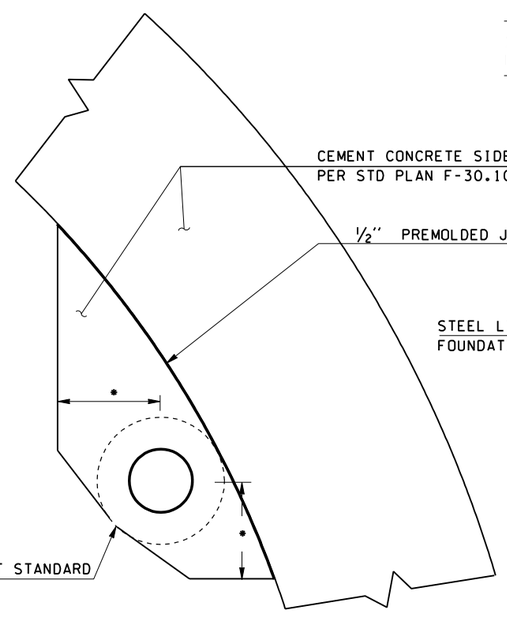

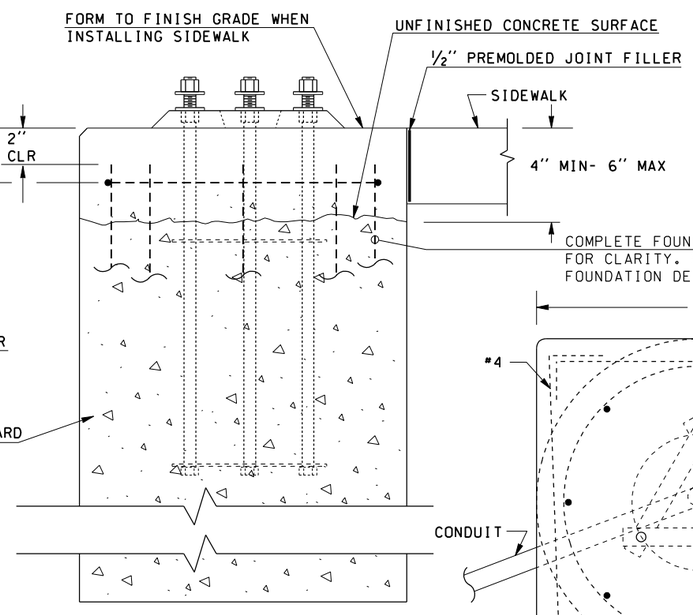

A-A
FOUNDATION OUTSIDE SIDEWALK SECTION

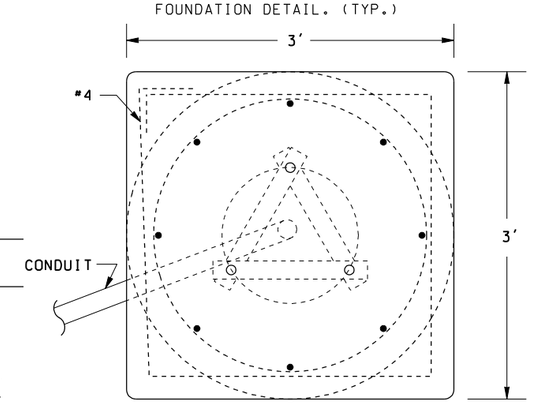

TOP VIEW
FIXED BASE SHOWN

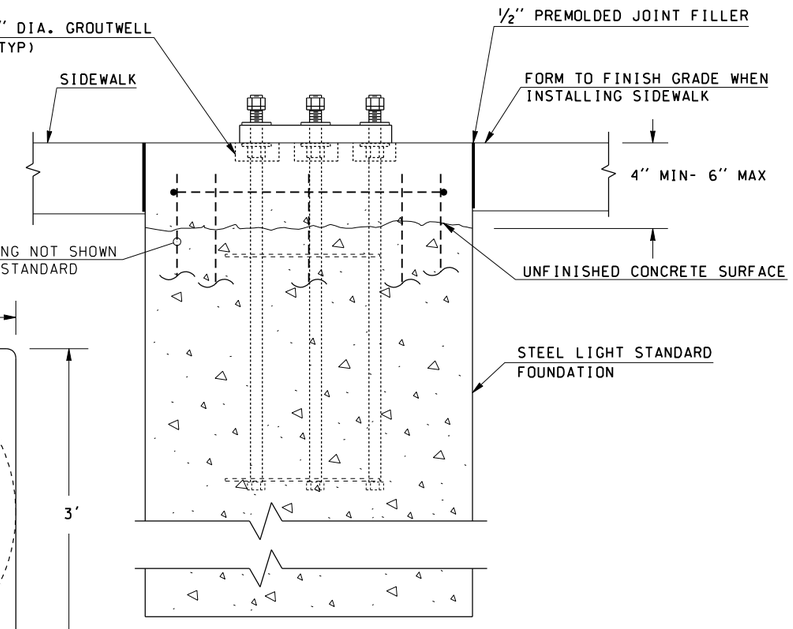

B-B
FOUNDATION PARTIALLY OR WITHIN SIDEWALK SECTION

FILE NAME	C:\JOHNNA\Master Details\ped pole\illum.dgn				REGION NO.	STATE	FED.AID PROJ.NO.
TIME	4:00:07 PM				10	WASH	
DATE	6/28/2007				JOB NUMBER		
PLOTTED BY	harveyj						
DESIGNED BY	WSDOT				CONTRACT NO.		LOCATION NO.
ENTERED BY	WSDOT						
CHECKED BY	WSDOT						
PROJ. ENGR.		NEW SHEET DESIGNATION	6/13/07	JH			
REGIONAL ADM.		REVISION	DATE	BY			

P.E. STAMP BOX DATE

P.E. STAMP BOX DATE

Washington State Department of Transportation

ENGLISH ILLUMINATION DETAILS

SIDEWALK WITH STEEL LIGHT STANDARD

PLOT11

5.10E

SHEET OF SHEETS