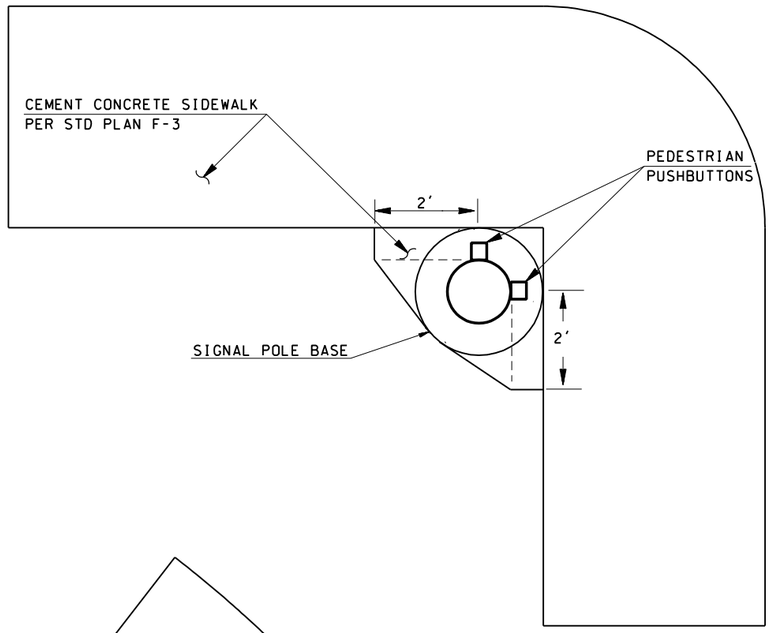

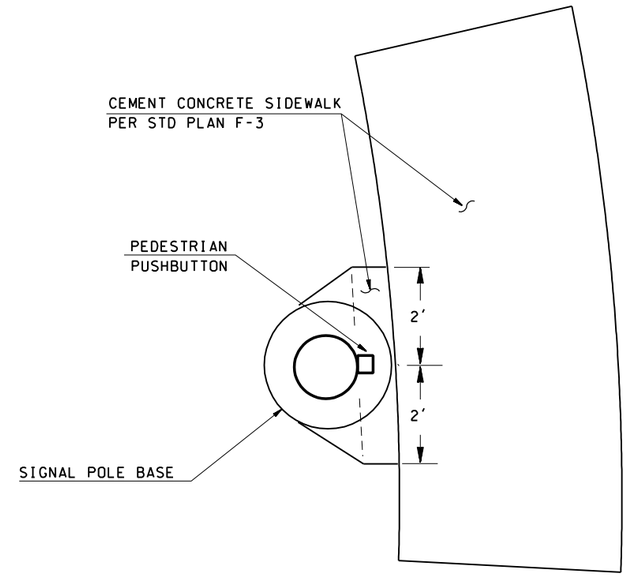

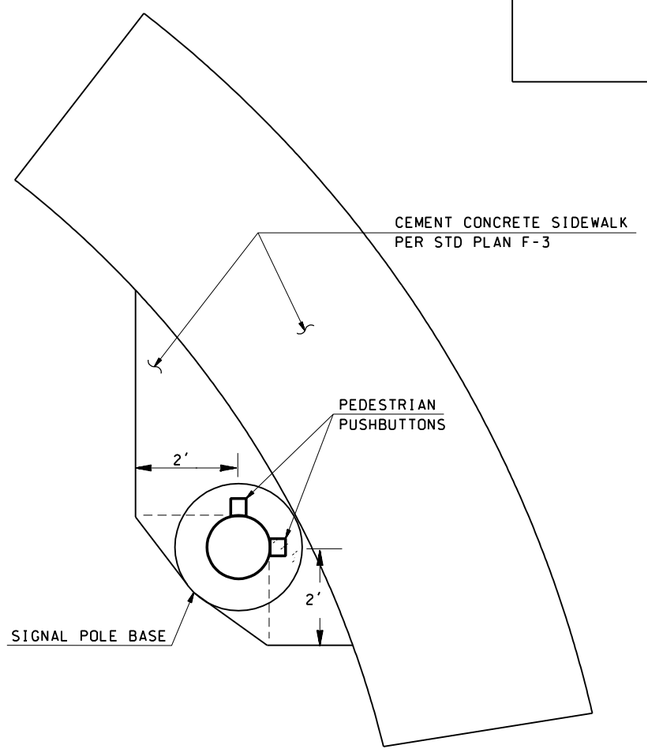

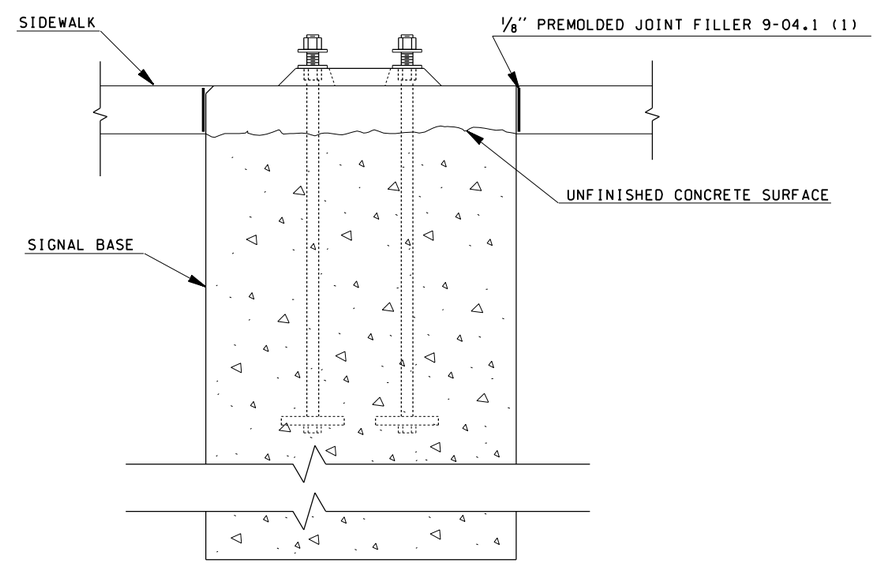

FILE NAME	S:\414126\Electrical\MASTER_FILES\DETAILS Homepage\Signal.dgn								PLOT7
TIME	02:53:20 PM				REGION NO.	STATE	FED.AID PROJ.NO.	Washington State Department of Transportation	ENGLISH	2.07E
DATE	04/07/2005				10	WASH				SHEET
					JOB NUMBER					OF
DESIGNED BY	WSDOT									SHEETS
ENTERED BY	WSDOT									
CHECKED BY	WSDOT	NEW SHEET DESIGNATION	6/24/97	TEV	CONTRACT NO.		LOCATION NO.			
PROJ. ENGR.		SIGNAL BASE DETAIL	3/19/97	TEV						
REGIONAL ADM.		REVISION	DATE	BY						

P.E. STAMP BOX DATE

P.E. STAMP BOX DATE