WATERVILLE AIRPORT
2005 PAVEMENT MANAGEMENT REPORT

Prepared By:

Applied Pavement Technology, Inc.
3001 Research Road, Suite C
Champaign, Illinois 61822
217-398-3977
www.pavementsolutions.com

providing engineering solutions to improve pavement performance

The preparation of this document may have been supported, in part, through the Airport Improvement Program financial assistance from the Federal Aviation Administration (Project Number 3-53-0000-01, 3-53-0000-03 and 3-53-0000-04) as provided under Title 49, United States Code, section 47104. The contents do not necessarily reflect the official views or policy of the FAA. Acceptance of this report by the FAA does not in any way constitute a commitment on the part of the United States to participate in any development depicted therein nor does it indicate that the proposed development is environmentally acceptable in accordance with appropriate public laws.

WATERVILLE AIRPORT
2005 PAVEMENT MANAGEMENT REPORT

Prepared By:

Applied Pavement Technology, Inc.
3001 Research Road, Suite C
Champaign, Illinois 61822
(217) 398-3977
www.pavementsolutions.com

In Association With:

CH2M HILL
1100 112th Avenue NE, Suite 400
Bellevue, WA 98004

CivilTech Engineering
10800 NE 8th Street, Suite 820
Bellevue, WA 98004

Prepared For:

WSDOT Aviation
3704 172nd Street NE, Suite K2
Arlington, WA 98223
Phone: (360) 651-6300 or (800) 552-0666
Fax: (360) 651-6319
www.wsdot.wa.gov/aviation

and

Federal Aviation Administration
Seattle Airports District Office
1601 Lind Avenue S.W., Suite 250
Renton, WA 98055

February 2006

TABLE OF CONTENTS

INTRODUCTION 1
PAVEMENT INVENTORY 3
PAVEMENT EVALUATION 6
Pavement Evaluation Procedure 6
Pavement Evaluation Results 7
PAVEMENT MAINTENANCE AND REHABILITATION PROGRAM 12
Analysis Parameters 12
Analysis Approach 13
Analysis Results 13
General Maintenance Recommendations 16

LIST OF FIGURES

Figure 1. Pavement condition versus cost of repair 1
Figure 2. Waterville Airport pavement inventory. 3
Figure 3. Waterville Airport work history map. 4
Figure 4. Waterville Airport network definition map. 5
Figure 5. Visual representation of PCI scale. 6
Figure 6. Waterville Airport overall condition. 7
Figure 7. Waterville Airport area-weighted PCI by use. 8
Figure 8. Waterville Airport PCI map. 9
Figure 9. Waterville Airport unlimited budget capital improvement program map. 15

LIST OF TABLES

Table 1. Waterville Airport pavement evaluation results 10
Table 2. Waterville Airport present and future PCI values and anticipated repair needs. 11
Table 3. Critical PCI values. 12
Table 4. Waterville Airport unlimited budget global maintenance and major rehabilitation plan. 14

APPENDICES

Appendix A. FAA AC 150/5380-6A A-1
Appendix B. Cause of Distress Tables B-1
Appendix C. Photographs C-1
Appendix D. Re-Inspection Report D-1
Appendix E. Maintenance Policies and Unit Cost Tables E-1
Appendix F. Year 2006 Localized Maintenance Details F-1

INTRODUCTION

Applied Pavement Technology, Inc. (APTech), with assistance from CH2M HILL and CivilTech Engineering, recently updated the Washington Airport Pavement Management System (APMS) for the Washington State Department of Transportation (WSDOT) Aviation. The principal objective for the APMS is to assess the relative condition of pavements for selected Washington airports in the Washington State Airport System Plan (WSASP). The APMS can be used as a tool to identify system needs, make programming decisions for funding, provide information for legislative decision making, and assist local jurisdictions with planning decisions.

As part of this project, pavement conditions at Waterville Airport were assessed in 2005 using the Pavement Condition Index (PCI) procedure. During a PCI inspection, the types, severities, and amounts of distress present in a pavement are quantified. This information is then used to develop a composite index that represents the overall condition of the pavement in numerical terms, ranging from 0 (failed) to 100 (excellent). The PCI number is a measure of overall condition and is indicative of the level of work that will be required to maintain or repair a pavement. Further, the distress information provides insight into what is causing the pavement to deteriorate, which is the first step in selecting the appropriate repair action.

Programmed into an APMS, PCI information is used to determine when preventive maintenance actions (such as crack sealing) are advisable and also to identify the most cost-effective time to perform major rehabilitation (such as an overlay). The importance of identifying not only the type of repair but also the optimal time of repair is illustrated in Figure 1. This figure shows that there is a point in a pavement's life cycle where the rate of deterioration increases. The financial impact of delaying repairs beyond this point can be severe.

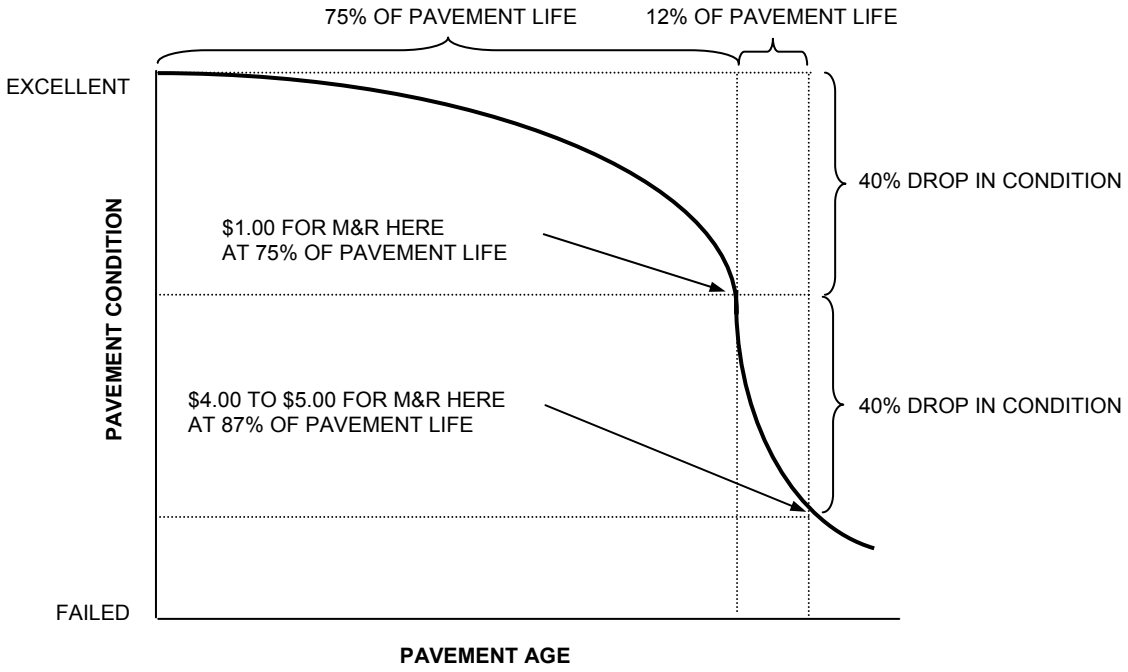

Figure 1. Pavement condition versus cost of repair.

This report presents the pavement evaluation results for Waterville Airport, which can be used by the Airport and WSDOT to prioritize and schedule pavement maintenance and rehabilitation actions at the Airport.

PAVEMENT INVENTORY

The first step in the pavement evaluation process was determining the extent of the pavement infrastructure at the Airport and its characteristics. To gather this information, CH2M HILL conducted a records review to determine when and how the Airport's pavements were constructed and subsequently rehabilitated.

The review concluded that approximately 254,534 square feet of runway, taxiway, and apron pavements exist at Waterville Airport, as shown in Figure 2. This figure also shows the average age of the pavements.

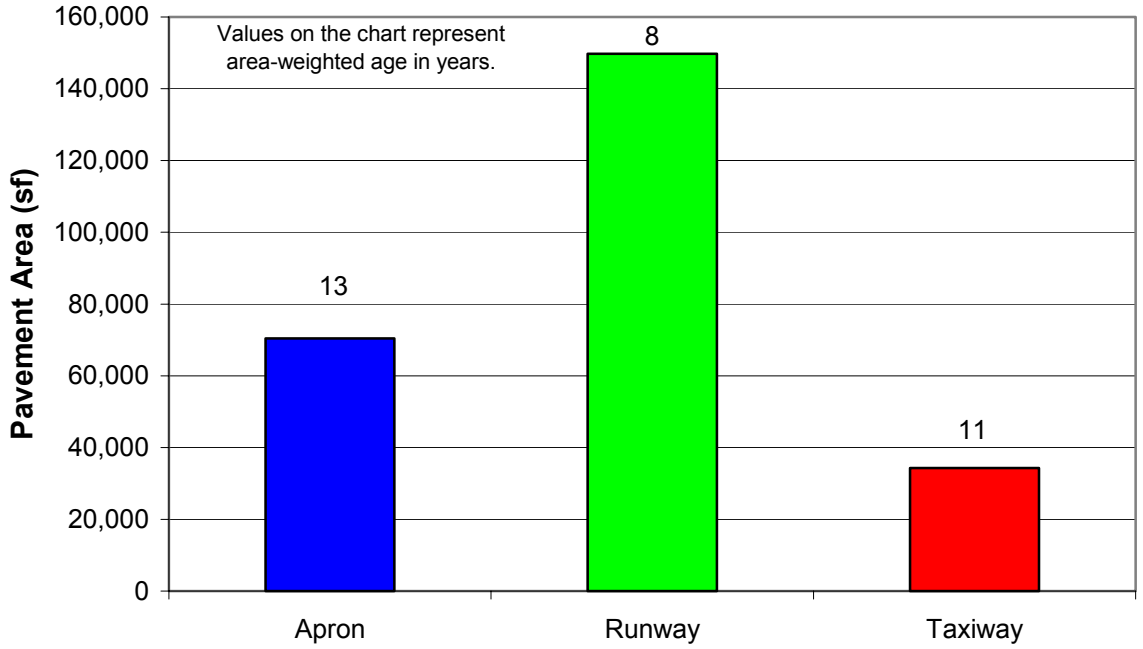

Figure 2. Waterville Airport pavement inventory.

Figure 3 presents the records review results in the form of a work history map. The Micro PAVER database (see the inside back cover of this report) contains detailed inventory information about the pavement system at the airport.

Using the records review information, the pavements were divided into branches, sections, and sample units in accordance with the FAA Advisory Circular (AC) 150/5380-6A and American Society for Testing and Materials (ASTM) Standard D5430. A branch is a part of the pavement system that serves a single function (i.e., runway, taxiway, or apron). A section is a portion of a branch with common characteristics (cross-section, age, traffic level, and overall condition). Sections are divided into sample units for the purpose of pavement inspection.

Figure 4 shows how the pavement network was divided into these units and it also shows the nomenclature used in the Micro PAVER pavement management database to identify the different pavement areas.

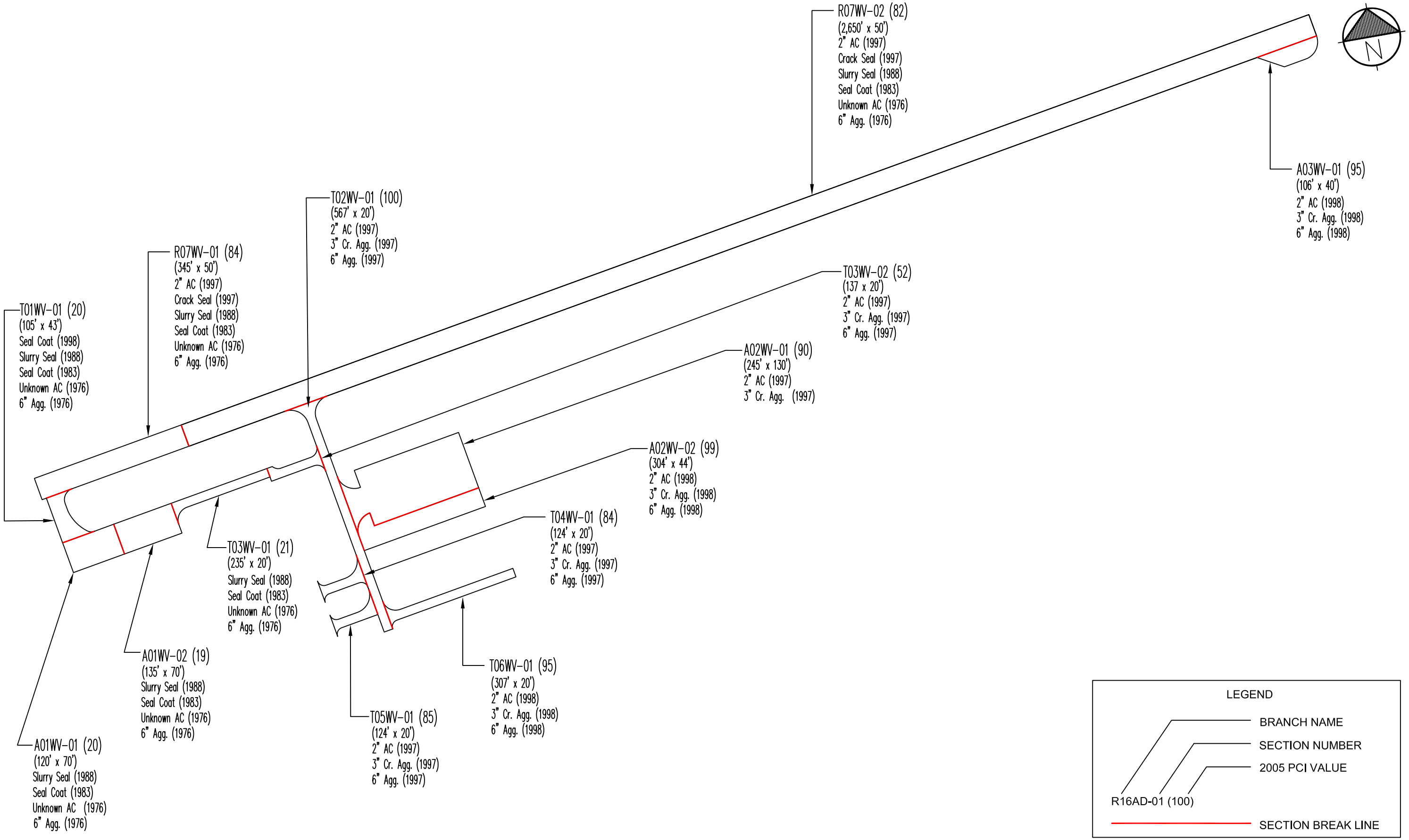

CH2MHILL

CIVILTECH ENGINEERING

Washington State Department of Transportation

Applied Pavement Technology, Inc.
3010 Woodcreek Drive, Suite J
Downers Grove, IL 60515
Tel: (630) 434-9210
Fax: (630) 434-9213

LOCATION: Waterville Airport, Waterville, Washington			
PAGE TITLE: 2005 Work History Map			
DRAWING SCALE: 1" = 200'	DATE: February 2006	REVISED BY: TJS	DRAWN BY: JR
FILENAME: Waterville.dwg	AIRPORT ID: 2S5	LAYOUT NAME/NUMBER: Waterville (WH)	PAGE NUMBER: 4

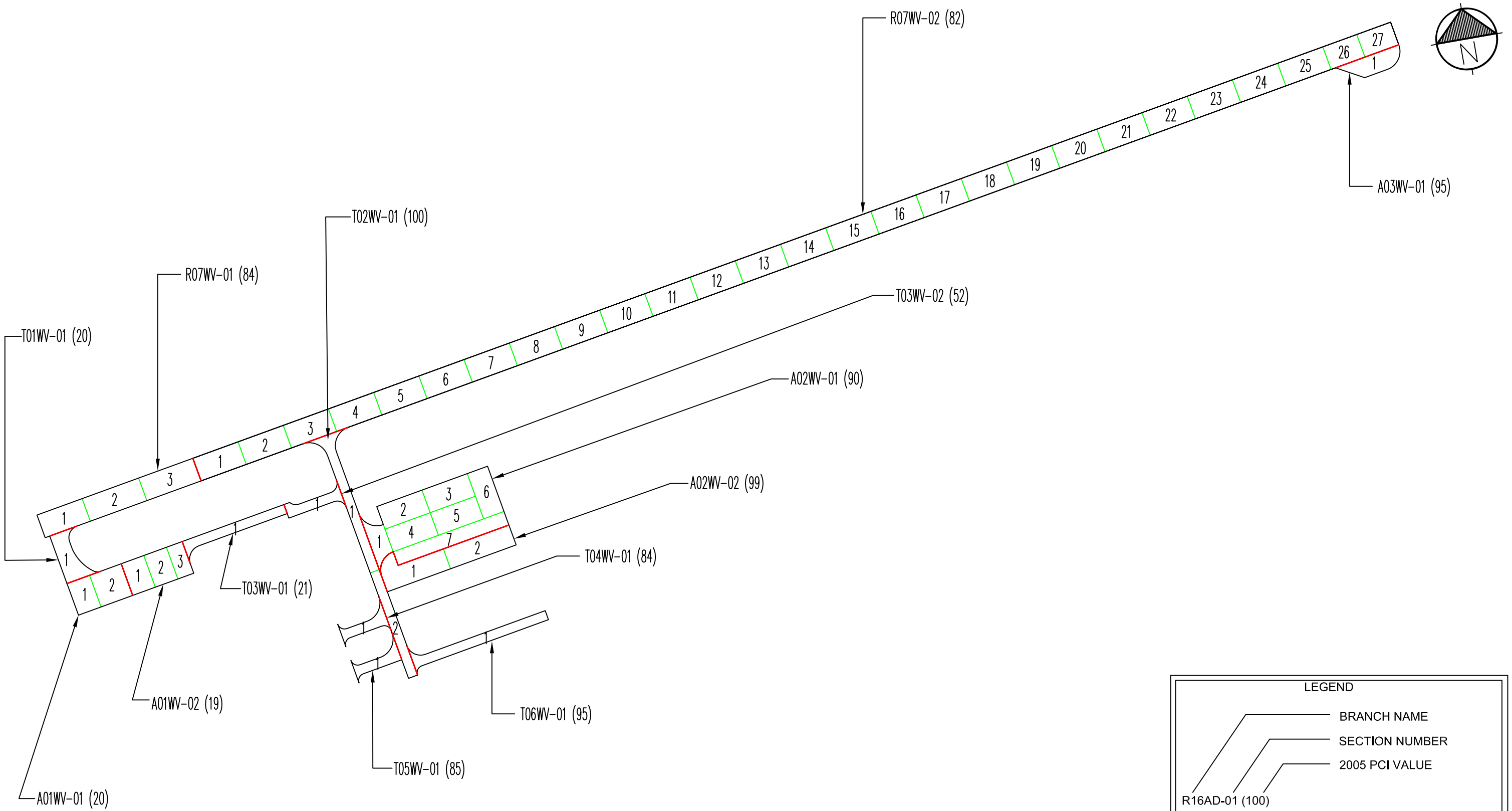

LEGEND

BRANCH NAME

SECTION NUMBER

2005 PCI VALUE

R16AD-01 (100)

SECTION BREAK LINE

SAMPLE UNIT BREAK LINE

03 SAMPLE UNIT NUMBER

0 100 200 400

SCALE: 1 inch = 200 ft.

CH2MHILL

CIVILTECH ENGINEERING

Washington State Department of Transportation

Applied Pavement Technology, Inc.
3010 Woodcreek Drive, Suite J
Downers Grove, IL 60515
Tel: (630) 434-9210
Fax: (630) 434-9213

LOCATION: Waterville Airport, Waterville, Washington			
PAGE TITLE: 2005 Network Definition Map			
DRAWING SCALE: 1" = 200'	DATE: February 2006	REVISED BY: TJS	DRAWN BY: JR
FILENAME: Waterville.dwg	AIRPORT ID: 2S5	LAYOUT NAME/NUMBER: Waterville (ND)	PAGE NUMBER: 5

PAVEMENT EVALUATION

Pavement Evaluation Procedure

APTech inspected the pavements at Waterville Airport using the PCI procedure. This procedure is described in FAA AC 150/5380-6A, which is presented in Appendix A, and in ASTM Standard D5340. The PCI provides a numerical indication of overall pavement condition, as illustrated in Figure 5. The types and amounts of deterioration are used to calculate the PCI value of the section. The PCI ranges from 0 to 100, with 100 representing a pavement in excellent condition.

Representative Pavement Surface[1]	PCI
	100
	60
	5

[1]Photographs shown are not specific to the Airport.

Figure 5. Visual representation of PCI scale.

It should be noted that a PCI value is based on visual signs of pavement deterioration and does not provide a measure of structural capacity.

The types of distress identified during the PCI inspection provide insight into the cause of pavement deterioration. PCI distress types are characterized as load-related (such as alligator cracking on asphalt cement concrete [AC] pavements or corner breaks on portland cement concrete [PCC] pavements), climate/durability-related (such as weathering [climate-related on AC pavements] and D-cracking [durability-related on PCC pavements]), and other (distress types that cannot be attributed solely to load or climate/durability). Understanding the cause of distress helps in selecting a rehabilitation alternative that corrects the cause and thus eliminates its recurrence.

Appendix B identifies the distress types considered during a PCI inspection and the likely cause of each distress type.

Pavement Evaluation Results

The pavements at Waterville Airport were inspected on June 2, 2005. The 2005 area-weighted condition of Waterville Airport is 79, with conditions ranging from 19 to 100 (on a scale of 0 [failed] to 100 [excellent]). During the previous inspection in 1999, the area-weighted condition was 89.

Figures 6 and 7 summarize the overall condition of the pavements at the Waterville Airport. Figure 8 displays the condition of the pavements evaluated. Table 1 summarizes the results of the pavement evaluation. Appendix C presents photographs taken during the PCI inspection and Appendix D details the distresses observed during the visual survey.

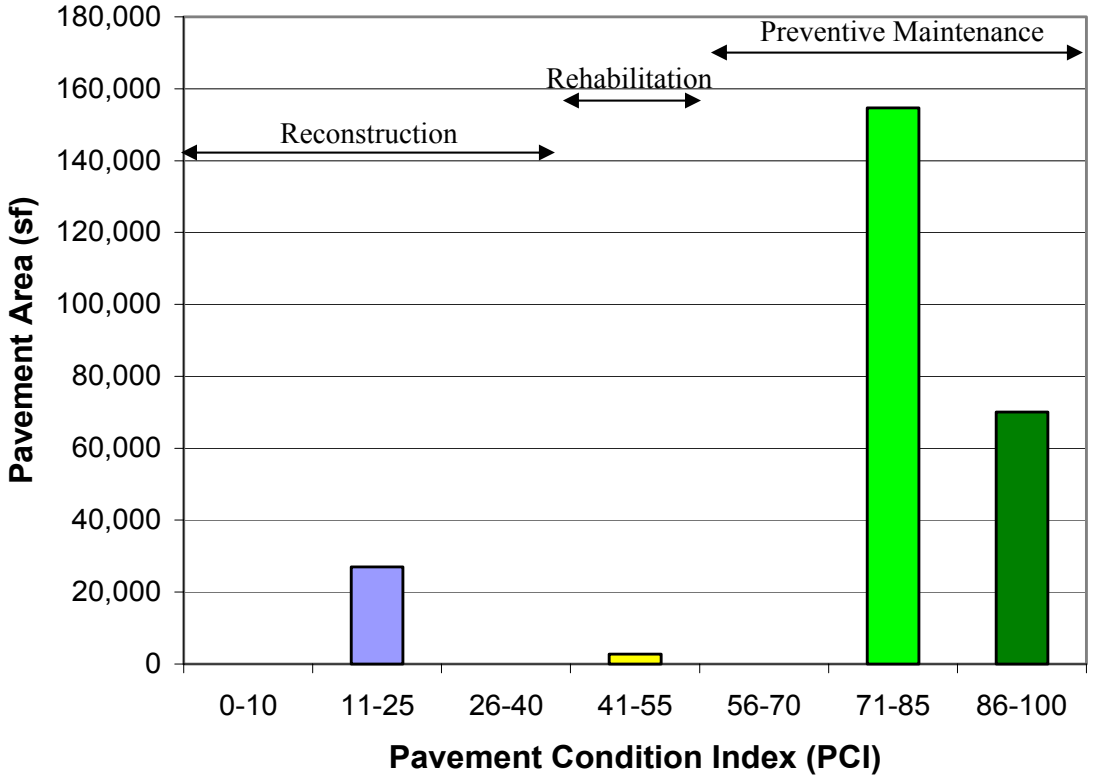

Figure 6. Waterville Airport overall condition.

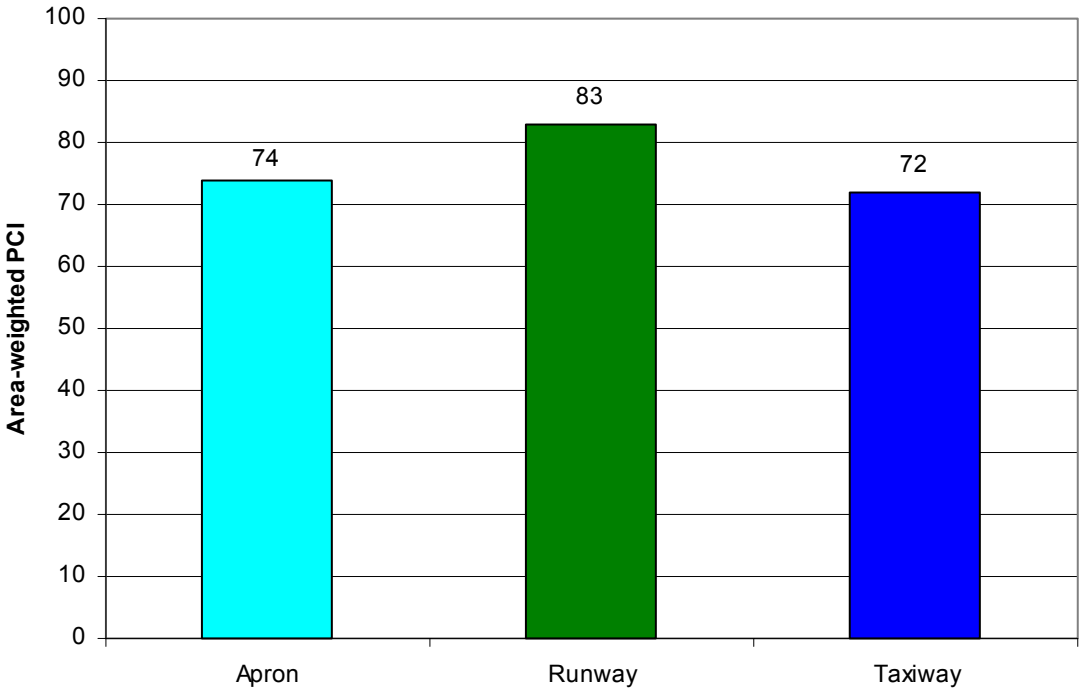

Figure 7. Waterville Airport area-weighted PCI by use.

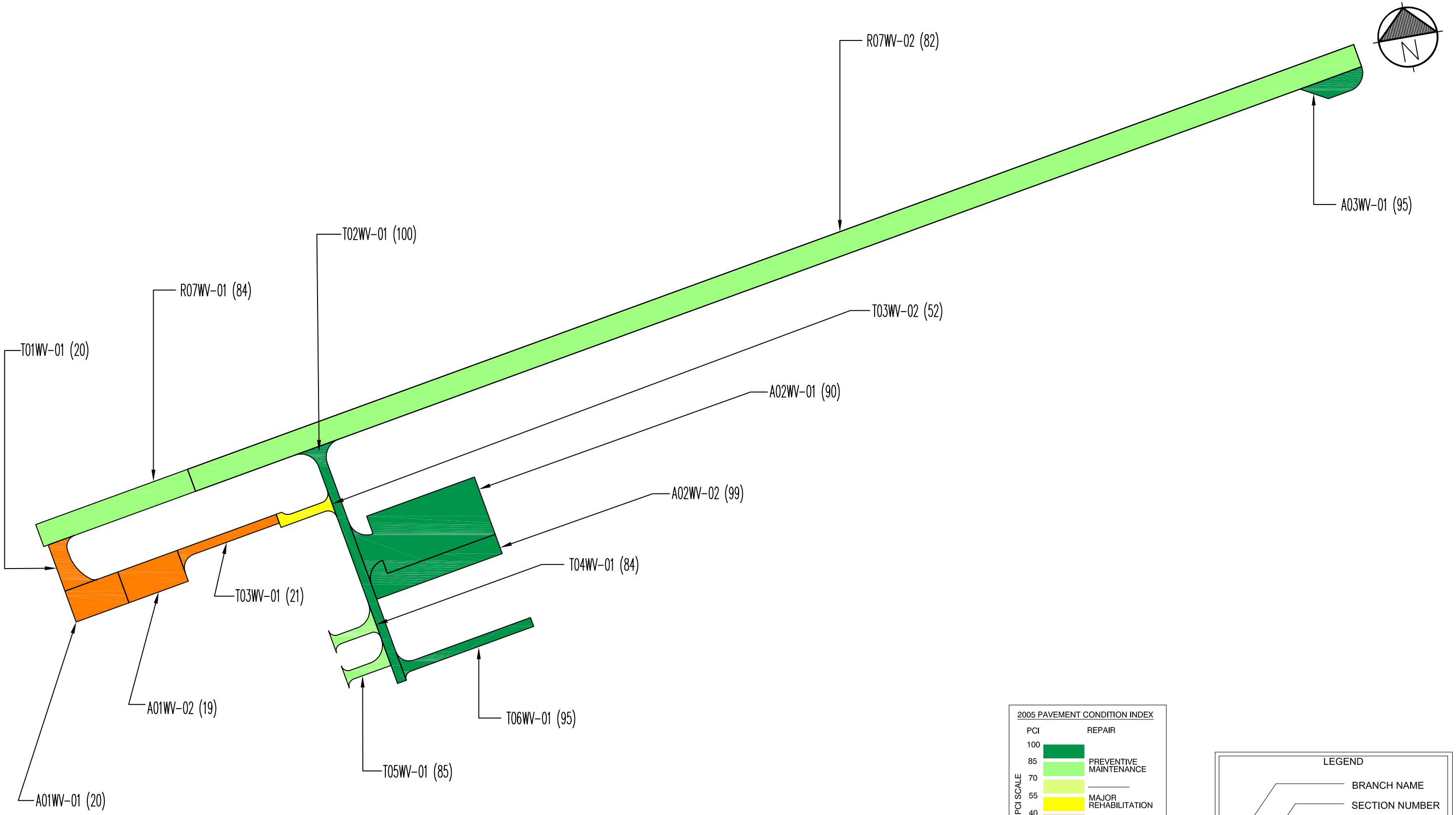

0 100 200 400

SCALE: 1 inch = 200 ft.

2005 PAVEMENT CONDITION INDEX

PCI	REPAIR
100	
85	PREVENTIVE MAINTENANCE
70	
55	MAJOR REHABILITATION
40	
25	RECONSTRUCTION
10	
0	

PCI SCALE

LEGEND

BRANCH NAME

SECTION NUMBER

2005 PCI VALUE

R16AD-01 (100)

CH2MHILL

CIVILTECH ENGINEERING

Washington State Department of Transportation

Applied Pavement Technology, Inc.
3010 Woodcreek Drive, Suite J
Downers Grove, IL 60515
Tel: (630) 434-9210
Fax: (630) 434-9213

LOCATION: Waterville Airport, Waterville, Washington			
PAGE TITLE: 2005 Pavement Condition Index Map			
DRAWING SCALE: 1" = 200'	DATE: February 2006	REVISED BY: TJS	DRAWN BY: JR
FILENAME: Waterville.dwg	AIRPORT ID: 2S5	LAYOUT NAME/NUMBER: Waterville (PCI)	PAGE NUMBER: 9

Table 1. Waterville Airport pavement evaluation results.

Waterville Airport								
Branch[1]	Section	Surface Type[2]	Section Area, sf	LCD[3]	2005 PCI	% Distress Due to:		Distress Types
						Load[4]	Climate or Durability[5]	
A01WV	01	AC	8,400	9/2/1976	20	36	42	Alligator cracking, depression, longitudinal and transverse cracking, patching, rutting, raveling and weathering
A01WV	02	AC	9,450	9/2/1976	19	36	45	Alligator cracking, depression, longitudinal and transverse cracking, patching, rutting, raveling and weathering
A02WV	01	AC	34,937	9/2/1997	90	0	100	Longitudinal and transverse cracking
A02WV	02	AC	13,397	9/3/1998	99	0	100	Longitudinal and transverse cracking
A03WV	01	AC	4,257	9/3/1998	95	0	100	Longitudinal and transverse cracking
R07WV	01	AC	17,250	9/2/1997	84	0	100	Longitudinal and transverse cracking
R07WV	02	AC	132,500	9/2/1997	83	0	100	Longitudinal and transverse cracking, patching, raveling and weathering
T01WV	01	AC	4,485	9/1/1976	20	30	57	Alligator cracking, depression, longitudinal and transverse cracking, patching, raveling and weathering
T02WV	01	AC	11,347	9/3/1997	100	0	0	Depression
T03WV	01	AC	4,693	9/2/1976	21	34	44	Alligator cracking, depression, longitudinal and transverse cracking, raveling and weathering
T03WV	02	AC	2,749	9/3/1997	52	77	23	Alligator cracking, patching, raveling and weathering
T04WV	01	AC	2,488	9/3/1997	84	0	100	Patching
T05WV	01	AC	2,440	9/3/1997	85	0	100	Patching
T06WV	01	AC	6,141	9/3/1998	95	0	100	Patching

[1]See Figure 3 for the location of the branch and section.

[2] AC = asphalt cement concrete; AAC = asphalt overlay on AC; PCC = portland cement concrete; APC = asphalt overlay on PCC.

[3] LCD = last construction date (date of construction or last major rehabilitation).

[4] Distress due to load includes those distresses attributed to a structural deficiency in the pavement, such as alligator (fatigue) cracking, rutting, or shattered concrete slabs.

[5]Distress due to climate or durability includes those distresses attributed to either the aging of the pavement and the effects of the environment (such as weathering and raveling or block cracking in asphalt pavements) or to a materials-related problem (such as durability cracking in a concrete pavement).

Table 2 shows the 2005 PCI value as well as the predicted condition in 2010 and 2015 if no major rehabilitation is performed. These predictions were made using pavement performance models developed during the project and represent estimated conditions if only routine maintenance is performed during the next 10 years.

Table 2. Waterville Airport present and future PCI values and anticipated repair needs.

Branch[1]	Section	2005		2010		2015	
		PCI	Repair Level	PCI	Repair Level[2]	PCI	Repair Level
A01WV	01	20	Reconstruction	9	Reconstruction	0	Reconstruction
A01WV	02	19	Reconstruction	16	Reconstruction	14	Reconstruction
A02WV	01	90	Prev. Mnt.	82	Prev. Mnt.	73	Prev. Mnt.
A02WV	02	99	Prev. Mnt.	92	Prev. Mnt.	83	Prev. Mnt.
A03WV	01	95	Prev. Mnt.	87	Prev. Mnt.	79	Prev. Mnt.
R07WV	01	84	Prev. Mnt.	78	Prev. Mnt.	71	Prev. Mnt.
R07WV	02	83	Prev. Mnt.	77	Prev. Mnt.	70	Prev. Mnt.
T01WV	01	20	Reconstruction	11	Reconstruction	1	Reconstruction
T02WV	01	100	Prev. Mnt.	91	Prev. Mnt.	81	Prev. Mnt.
T03WV	01	21	Reconstruction	17	Reconstruction	14	Reconstruction
T03WV	02	52	Rehabilitation	43	Rehabilitation	33	Reconstruction
T04WV	01	84	Prev. Mnt.	75	Prev. Mnt.	65	Prev. Mnt.
T05WV	01	85	Prev. Mnt.	76	Prev. Mnt.	66	Prev. Mnt.
T06WV	01	95	Prev. Mnt.	86	Prev. Mnt.	76	Prev. Mnt.

[1]See Figure 3 for the location of the branch and section.
[2]Prev. Mnt. = preventive maintenance.

PAVEMENT MAINTENANCE AND REHABILITATION PROGRAM

Using the information collected during the pavement inspection, a rehabilitation program for 2006 through 2012 was developed for Waterville Airport. In addition, a 1-year plan for 2006 for localized preventive maintenance (such as crack sealing and patching) was prepared. The Micro PAVER pavement management software was used to perform this analysis.

Analysis Parameters

Critical PCI Values

Micro PAVER uses critical PCI values to determine whether preventive maintenance or major rehabilitation is the appropriate repair action. Above the critical PCI, localized (such as crack sealing) and global (such as a slurry seal) preventive maintenance activities are recommended. Below the critical PCI, major rehabilitation (such as an overlay or reconstruction) is recommended. WSDOT established the critical PCI values shown in Table 3.

Table 3. Critical PCI values.

Surface Type	Load Classification	Runway	Taxiway	Apron
AC	<60,000#	65	60	60
	≥60,000#	70	65	60
PCC	<60,000#	55	50	50
	≥60,000#	60	55	50

Budget and Inflation Rate

An unlimited budget and an inflation rate of 3 percent were used during the analysis.

Maintenance Policies and Unit Costs

Localized preventive maintenance policies were developed for AC and PCC pavements. These policies, shown in Appendix E, identify the localized maintenance actions that WSDOT considers appropriate to correct different distress types when the PCI of the pavement is above the critical PCI level.

Global maintenance policies were also developed. These are maintenance actions that are applied over an entire section, rather than just to distressed areas. Global maintenance treatments of fog seals and slurry seals were considered during the analysis for non-NPIAS airports only.

CH2M HILL estimated unit costs at the state level for each of the repair types in the localized and global maintenance policies, and these costs are provided in Appendix E. Please note that the maintenance policies and unit costs may require adjustment to reflect specific conditions at Waterville Airport.

Major Rehabilitation Unit Costs

Micro PAVER estimates the cost of major rehabilitation based upon the PCI of the pavement. CH2M HILL developed the unit costs used during the analysis, and they are presented in Appendix E. If major rehabilitation is recommended in the program, further engineering investigation will be needed to identify the most appropriate rehabilitation action and to more accurately estimate the cost of such work.

Analysis Approach

The goal of the rehabilitation program is to maintain the pavements above established critical PCI values. Major rehabilitation was recommended for pavements in the year they dropped below their critical PCI value for 2007 through 2012. However, no major rehabilitation was recommended for 2006 unless the project is already programmed in WSDOT Aviation's Local Airport Aid Program. In situations where major rehabilitation was recommended for 2006 but the project is not in WSDOT Aviation's Aid Program, the major rehabilitation was shifted to 2007. With the assistance of WSDOT, some work activities were grouped into single project years and work types for economic and operational reasons. For example, if one section of a runway was triggered for work in one year and another for a different year, or if different repair types were triggered, the plan was adjusted to a single treatment year and treatment type for the runway.

For 2006, a localized preventive maintenance plan was developed for those pavement sections that were above their critical PCI value. If major rehabilitation was triggered for a section in 2006 or 2007, then localized maintenance was not recommended for 2006. While localized preventive maintenance should be an annual undertaking at Waterville Airport, it is not possible to accurately predict the propagation of cracking and so on. The airport should budget for maintenance every year and can use the 2006 maintenance plan as a baseline for that work. As the pavements age, it can be assumed that the amount of localized maintenance required will increase.

Analysis Results

A summary of the pavement repair program for Waterville Airport is presented in Table 4 and in Figure 9. Detailed information on the localized maintenance plan for 2006 is contained in Appendix F.

The recommendations presented in this report are based upon a broad network-level analysis and are meant to provide Waterville Airport with an indication of the type of pavement-related work required during the next seven years. Further engineering investigation may be needed to identify which repair action is most appropriate. In addition, the cost estimates provided are based on a statewide policy, and Waterville Airport should adjust the plan to reflect local costs.

Because an unlimited budget was used in the analysis, it is probable that the pavement repair program will need to be adjusted to take into account economic and/or operational constraints. The identification of the need for a global maintenance or major rehabilitation project does NOT mean that state funding will be available to complete the work in the year shown. It is important to remember that regardless of the recommendations presented within this

report, Waterville Airport is responsible for repairing pavements where existing conditions pose a hazard to safe operations.

Table 4. Waterville Airport unlimited budget global maintenance and major rehabilitation plan.

Year	Branch[1]	Section	Action	Estimated Cost[2]
2008	A01WV	01	2" AC Construction	$52,320
		02	2" AC Construction	$58,860
	A02WV	01	Slurry Seal	$44,478
	A03WV	01	Slurry Seal	$5,420
	R07WV	01	Slurry Seal	$21,961
		02	Slurry Seal	$168,683
	T01WV	01	2" AC Construction	$27,935
	T03WV	01	2" AC Construction	$29,231
		02	2" AC Construction	$17,122
	T04WV	01	Slurry Seal	$3,167
	T05WV	01	Slurry Seal	$3,106
	T06WV	01	Slurry Seal	$7,818
			Total	**$440,101**
2012	A02WV	01	Slurry Seal	$51,562
	A03WV	01	Slurry Seal	$6,283
	R07WV	01	Slurry Seal	$25,458
		02	Slurry Seal	$195,550
	T04WV	01	Slurry Seal	$3,672
	T05WV	01	Slurry Seal	$3,601
	T06WV	01	Slurry Seal	$9,063
			Total	**$295,189**

[1]See Figure 3 for the location of the branch and section.

[2]Cost estimates are based on broad statewide numbers and should be adjusted to reflect local costs.

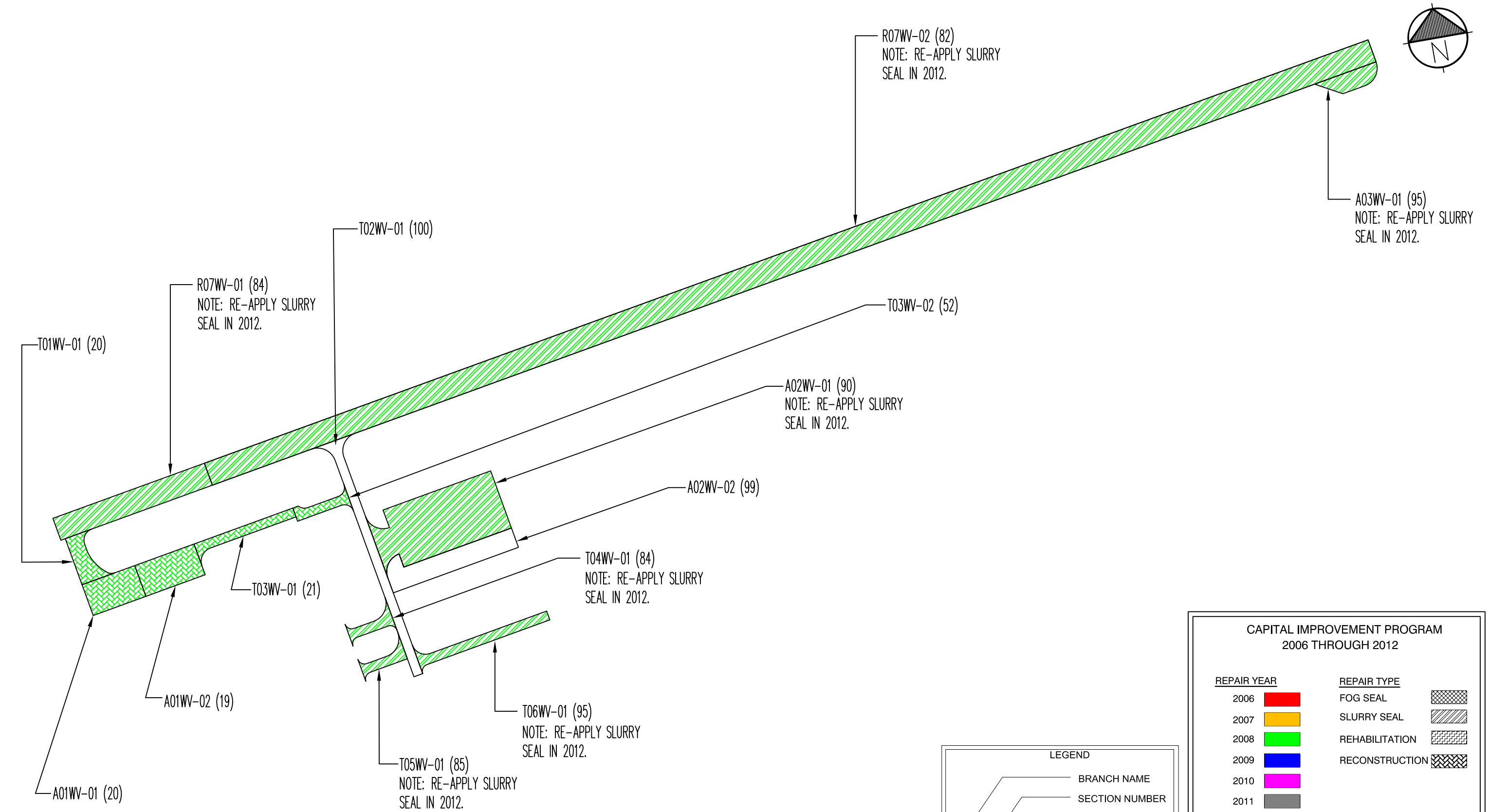

SCALE: 1 inch = 200 ft.

Note: Projects are subject to the availability of federal and state funds

CH2MHILL

CIVILTECH ENGINEERING

Washington State Department of Transportation

Applied Pavement Technology, Inc.
3010 Woodcreek Drive, Suite J
Downers Grove, IL 60515
Tel: (630) 434-9210
Fax: (630) 434-9213

LOCATION: Waterville Airport, Waterville, Washington			
PAGE TITLE: Capital Improvement Program Map			
DRAWING SCALE: 1" = 200'	DATE: February 2006	REVISED BY: TJS	DRAWN BY: JR
FILENAME: Waterville.dwg	AIRPORT ID: 2S5	LAYOUT NAME/NUMBER: Waterville (CIP	PAGE NUMBER: 15

General Maintenance Recommendations

In addition to the specific maintenance actions presented in Appendix F, the following strategies are recommended to prolong pavement life:

1. Conduct an aggressive campaign against weed growth through timely herbicide applications. Vegetation growing in pavement cracks is very destructive and significantly increases the rate of pavement deterioration.

2. Implement a periodic crack sealing program. Sealing cracks is a proven method for cost-effectively keeping water and debris out of the pavement system and extending its life.

3. Ensure that dirt does not build up along the edges of the pavements. This can create a "bathtub" effect—reducing the ability of water to drain away from the pavement system.

4. Closely monitor heavy equipment movement, such as construction equipment, emergency equipment, and fueling equipment, to make sure that it is only operating on pavement designed to accommodate the heavy loads this type of equipment often applies. Failure to restrict heavy equipment to appropriate areas may result in the premature failure of airport pavements.

APPENDIX A

FAA AC 150/5380-6A

U.S. Department
of Transportation

**Federal Aviation
Administration**

Advisory Circular

Subject: GUIDELINES AND PROCEDURES FOR MAINTENANCE OF AIRPORT PAVEMENTS	**Date:** 7/14/03 **Initiated by:** AAS-100	**AC No:** 150/5380-6A **Change:**

1. PURPOSE. This Advisory Circular (AC) provides guidelines and procedures for maintaining rigid and flexible airport pavements.

2. CANCELLATION. This AC cancels AC 150/5380-6, *Guidelines and Procedures for Maintenance of Airport Pavements,* dated 12/3/82.

3. APPLICATION. The Federal Aviation Administration (FAA) recommends these guidelines for airport pavements, as appropriate.

4. RELATED READING MATERIAL. The publications in Appendix 2, Bibliography, provide further guidance and technical information.

David L. Bennett
Director of Airport Safety and Standards

CONTENTS

Paragraph Page

CHAPTER 1. INTRODUCTION TO AIRPORT PAVEMENT MAINTENANCE..... 1

1-1. PURPOSE OF ADVISORY CIRCULAR 1
1-2. BACKGROUND OF ADVISORY CIRCULAR 1

CHAPTER 2. AIRPORT PAVEMENTS: COMPOSITION AND FUNCTION 3

2-1. INTRODUCTION TO AIRPORT PAVEMENTS 3
2-2. CLASSIFICATION OF AIRFIELD PAVEMENTS 3
2-3. RIGID PAVEMENT COMPOSITION AND STRUCTURE 3
FIGURE 2-1. TYPICAL RIGID PAVEMENTS STRUCTURE 3
FIGURE 2-2. TRANSFER OF WHEEL LOAD TO FOUNDATION IN RIGID PAVEMENT 4
FIGURE 2-3. FORMATION OF ICE CRYSTALS IN FROST SUSCEPTIBLE SOIL 4
2-4. FLEXIBLE PAVEMENT COMPOSITION AND STRUCTURE 5
FIGURE 2-4. TYPICAL FLEXIBLE PAVEMENT STRUCTURE 6
FIGURE 2-5. DISTRIBUTION OF LOAD STRESS IN FLEXIBLE PAVEMENT 6
2-5. AIRPORT PAVEMENT OVERLAYS 6
2-6. RECYCLED PAVEMENT STRUCTURES 6

CHAPTER 3. PAVEMENT DISTRESS 7

3-1. GENERAL 7
3-2. TYPES OF PAVEMENT DISTRESS 7
3-3. CONCRETE PAVEMENT DISTRESSES 7
3-4. BITUMINOUS PAVEMENT DISTRESSES 9
3-5. DRAINAGE OF AIRPORT PAVEMENTS 10

CHAPTER 4. GUIDELINES FOR INSPECTION OF PAVEMENTS 12

4-1. INTRODUCTION TO PAVEMENT INSPECTION 12
4-2. INSPECTION PROCEDURES 12
4-3. FRICTION SURVEYS 12
4-4. NONDESTRUCTIVE TESTING 13
4-5. DRAINAGE SURVEYS 13
4-6. PAVEMENT MANAGEMENT SYSTEMS 13
4-7. PAVEMENT PERFORMANCE 14
4-8. PAVEMENT MAINTENANCE MANAGEMENT PROGRAM 14

CHAPTER 5. MATERIALS AND EQUIPMENT 15

5-1. GENERAL 15
5-2. COMMON MATERIALS FOR MAINTENANCE AND REPAIR 15
5-3. EQUIPMENT USED FOR PAVEMENT MAINTENANCE 16

CHAPTER 6. METHODS OF REPAIR 19

6-1. GENERAL 19
6-2. REPAIR METHODS FOR PORTLAND CEMENT CONCRETE PAVEMENTS 19
6-3. TEMPORARY PATCHING OF CONCRETE PAVEMENTS 22
6-4. REPAIR METHODS FOR BITUMINOUS CONCRETE PAVEMENTS 23
6-5. ADDITIONAL REPAIR METHODS 25

TABLE 1. MAINTENANCE AND REPAIR OF PAVEMENT SURFACES 26

APPENDIX 1. PAVEMENT MAINTENANCE MANAGEMENT PROGRAM..... A1-1

APPENDIX 2. BIBLIOGRAPHY..... A2-1

CHAPTER 1. INTRODUCTION TO AIRPORT PAVEMENT MAINTENANCE.

1-1. PURPOSE OF ADVISORY CIRCULAR. Airport managers and technical/maintenance personnel responsible for the operation and maintenance of airports continually face problems with pavement distress and deterioration. This advisory circular (AC) provides information on the types of pavement distress that occur and recommends corrective actions to undertake during preventive and remedial maintenance. The FAA recommends that airports follow ASTM D 5340, *Standard Test Method for Airport Pavement Condition Index Surveys,* when conducting preventive maintenance inspections. This standard employs the visual distress identification and rating system known as the Pavement Condition Index (PCI).

1-2. BACKGROUND OF ADVISORY CIRCULAR. The aviation community has a large investment in airport pavements. The major objective in the design and construction of these pavements is to provide adequate load-carrying capacity and good ride quality necessary for the safe operation of aircraft under all weather conditions. Immediately after completion, airport pavements begin a gradual deterioration that is attributable to several factors. Traffic loads in excess of those forecast during pavement design can shorten pavement life considerably. Normal distresses in the pavement structure result from surface weathering, fatigue effects, and differential movement in the underlying subbase over a period of years. In addition, faulty construction techniques, substandard materials, or poor workmanship can accelerate the pavement deterioration process. Consequently, airport pavements require continual routine maintenance, rehabilitation, and upgrading.

a. Many pavements were not designed for servicing today's aircraft, which impose loads much greater than those initially considered. Also, the frequency of takeoffs and landings at many airports has increased considerably. Both factors result in accelerated deterioration of the pavement structure. To assure safe operations, airports must make special efforts to upgrade and maintain pavement serviceability.

b. The most effective means of preserving airport runways, taxiways, and apron pavement areas is to implement a comprehensive maintenance program. To be effective, such a program must take a coordinated, budgeted, and systematic approach to both preventive and remedial maintenance. Many airports using this approach have experienced tangible benefits. The comprehensive maintenance program should be updated annually and feature a schedule of inspections and a listing of required equipment and products. The airport should systematically make repairs and take preventive measures, when necessary, on an annual basis. A systematic approach assures continual vigilance and permits the stockpiling of maintenance materials, which assures their availability for routine and emergency maintenance.

Special Airport Improvement Program grant conditions now require many airports to develop and maintain an effective airport pavement maintenance management program. The FAA, however, also encourages airports that are not specifically required to develop maintenance programs to do so as a means of preserving their facilities. An effective pavement maintenance program can take many forms but must include several basic items, which are listed in Appendix 1. These items must be present in maintenance programs required by the FAA. They provide the core for an effective program, which can then be tailored and customized for the specific needs of the facility.

c. Two major elements contribute to pavement deterioration: the gradual effects of weathering and the action of aircraft traffic. Early detection and repair of pavement defects is the most important preventive maintenance procedure. Failure to perform routine maintenance during the early stages of deterioration may eventually result in serious pavement distresses that require extensive repairs that will be costly in terms of dollars and closure time. In all cases of pavement distress manifestations, the causes of the problem should first be determined. If the causes are known, an airport can select a repair method that will not only correct the present damage, but also prevent or retard its progression.

d. The selection of a specific rehabilitation method involves considering both economic and engineering impacts. Airports should prioritize long-term effects rather than focusing on immediate short-term remedies. They should compare the cost of rehabilitation alternatives over some finite period of time (life cycle) and consider the future economic consequences of a repair method as well as the initial rehabilitating maintenance costs.

e. The present or immediate costs of a pavement rehabilitation/maintenance project include actual costs of the repairs and the estimated costs that airport users will incur because of the project. Airport user costs include those experienced by airlines, fixed base operators, concession operators, and others due to traffic delays, re-routings, etc.

Future costs include those incurred later in the life cycle (depending on the life expectancy of the repair) plus the routine maintenance costs expected over the same period. A comparative analysis of these costs for the various alternatives will suggest the most economical rehabilitation scheme.

CHAPTER 2. AIRPORT PAVEMENTS: COMPOSITION AND FUNCTION.

2-1. INTRODUCTION TO AIRPORT PAVEMENTS. Airport pavements are designed, constructed, and maintained to support the critical loads imposed on them and to produce a smooth, skid-resistant, and safe-riding surface. The pavement must be of such quality and thickness to ensure it will not fail under the loads imposed and be durable enough to withstand the abrasive action of traffic, adverse weather conditions, and other deteriorating influences. To ensure the necessary strength of the pavement and to prevent unmanageable distresses from developing, the airport should consider various design, construction, and material-related parameters. This chapter helps airports assess these parameters by providing information on the composition of pavement sections and the functional aspects of flexible and rigid pavement components.

2-2. CLASSIFICATION OF AIRPORT PAVEMENTS. Generally, pavements fall into two classes:

a. Rigid pavements

b. Flexible pavements

Combinations of different pavement types and stabilized layers form complex pavements that can be classified as variations of the normal rigid and flexible types. Overlay pavements—existing pavement structures that are overlaid by either of the pavement types—are also common.

2-3. RIGID PAVEMENT COMPOSITION AND STRUCTURE. Rigid pavements normally use Portland cement concrete as the prime structural element. Depending on conditions, engineers may design the pavement slab with plain, lightly reinforced, continuously reinforced, prestressed, or fibrous concrete. The concrete slab usually lies on a compacted granular or treated subbase, which is supported, in turn, by a compacted subgrade. The subbase provides uniform stable support and may provide subsurface drainage. The concrete slab has considerable flexural strength and spreads the applied loads over a large area. Figure 2-1 illustrates a typical rigid pavement structure. Rigid pavements have a high degree of rigidity. Figure 2-2 show how this rigidity and the resulting beam action enable rigid pavements to distribute loads over large areas of the subgrade. Better pavement performance requires that support for the concrete slab be uniform. Rigid pavement strength is most economically built into the concrete slab itself with optimum use of low-cost materials under the slab.

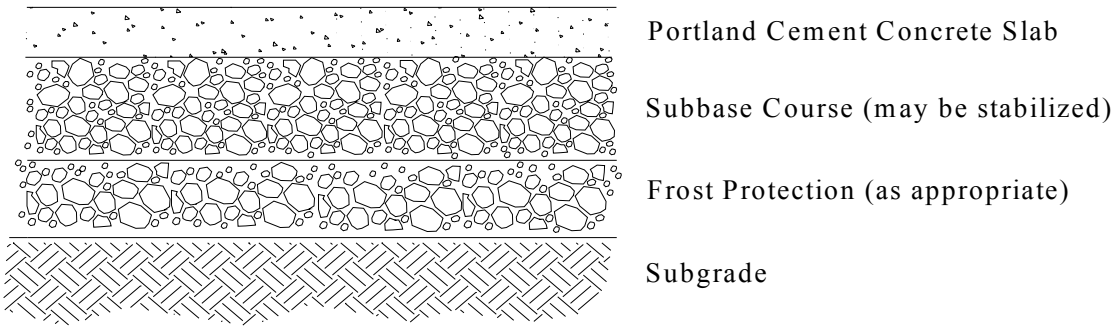

FIGURE 2-1. TYPICAL RIGID PAVEMENT STRUCTURE.

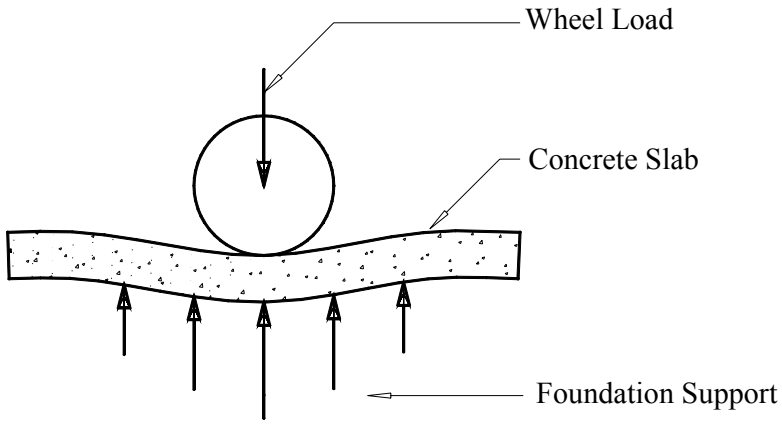

FIGURE 2-2. TRANSFER OF WHEEL LOAD TO FOUNDATION IN RIGID PAVEMENT STRUCTURE.

a. Concrete Slab (Surface Layer). The concrete slab provides structural support to the aircraft, provides a skid-resistant surface, and prevents the infiltration of excess surface water into the subbase.

b. Subbase. The subbase provides uniform stable support for the pavement slab. The subbase also serves to control frost action, provide subsurface drainage, control swelling of subgrade soils, provide a stable construction platform for rigid pavement construction, and prevent mud pumping of fine-grained soils. Rigid pavements generally require a minimum subbase thickness of 4 inches (100 mm).

c. Stabilized Subbase. All new rigid pavements designed to accommodate aircraft weighing 100,000 pounds (45,000 kg) or more must have a stabilized subbase. The structural benefit imparted to a pavement section by a stabilized subbase is reflected in the modulus of subgrade reaction assigned to the foundation.

d. Frost Protection Layer. In areas where freezing temperatures occur and where frost-susceptible soil with a high ground water table exists, engineers must consider frost action when designing pavements. Frost action includes both frost heave and loss of subgrade support during the frost-melt period. Frost heave may cause a portion of the pavement to rise because of the nonuniform formation of ice crystals in a frost-susceptible material (see Figure 2-3). Thawing of the frozen soil and ice crystals may cause pavement damage under loads. The frost protection layer functions as a barrier against frost action and frost penetration into the lower frost-susceptible layers.

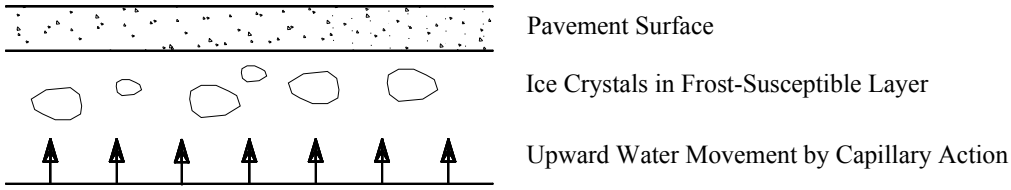

FIGURE 2-3. FORMATION OF ICE CRYSTALS IN FROST-SUSCEPTIBLE SOIL.

e. Subgrade. The subgrade is the compacted soil layer that forms the foundation of the pavement system. Subgrade soils are subjected to lower stresses than the surface and subbase courses. These stresses decrease with depth, and the controlling subgrade stress is usually at the top of the subgrade unless unusual conditions exist. Unusual conditions, such as a layered subgrade or sharply varying water content or densities, may change the locations of the controlling stress. The soils investigation should check for these conditions. The pavement above the subgrade must be capable of reducing stresses imposed on the subgrade to values that are low enough to prevent excessive distortion or displacement of the subgrade soil layer.

Since subgrade soils vary considerably, the interrelationship of texture, density, moisture content, and strength of subgrade material is complex. The ability of a particular soil to resist shear and deformation will vary with its density and moisture content. In this regard, the soil profile of the subgrade requires careful examination. The soil profile is the vertical arrangement of layers of soils, each of which may possess different properties and conditions. Soil conditions are related to the ground water level, presence of water-bearing strata, and the properties of the soil, including soil density, particle size, moisture content, and frost penetration. Since the subgrade soil supports the pavement and the loads imposed on the pavement surface, it is critical to examine soil conditions to determine their effect on grading and paving operations and the need for underdrains.

2-4. FLEXIBLE PAVEMENT COMPOSITION AND STRUCTURE. Flexible pavements support loads through bearing rather than flexural action. They comprise several layers of carefully selected materials designed to gradually distribute loads from the pavement surface to the layers underneath. The design ensures the load transmitted to each successive layer does not exceed the layer's load-bearing capacity. A typical flexible pavement section is shown in Figure 2-4. Figure 2-5 depicts the distribution of the imposed load to the subgrade. The various layers composing a flexible pavement and the functions they perform are described below:

a. Bituminous Surface (Wearing Course). The bituminous surface, or wearing course, is made up of a mixture of various selected aggregates bound together with asphalt cement or other bituminous binders. This surface prevents the penetration of surface water to the base course; provides a smooth, well-bonded surface free from loose particles, which might endanger aircraft or people; resists the stresses caused by aircraft loads; and supplies a skid-resistant surface without causing undue wear on tires.

b. Base Course. The base course serves as the principal structural component of the flexible pavement. It distributes the imposed wheel load to the pavement foundation, the subbase, and/or the subgrade. The base course must have sufficient quality and thickness to prevent failure in the subgrade and/or subbase, withstand the stresses produced in the base itself, resist vertical pressures that tend to produce consolidation and result in distortion of the surface course, and resist volume changes caused by fluctuations in its moisture content. The materials composing the base course are select hard and durable aggregates, which generally fall into two main classes: stabilized and granular. The stabilized bases normally consist of crushed or uncrushed aggregate bound with a stabilizer, such as Portland cement or bitumen. The quality of the base course is a function of its composition, physical properties, and compaction of the material.

c. Subbase. This layer is used in areas where frost action is severe or the subgrade soil is extremely weak. The subbase course functions like the base course. The material requirements for the subbase are not as strict as those for the base course since the subbase is subjected to lower load stresses. The subbase consists of stabilized or properly compacted granular material.

d. Frost Protection Layer. Some flexible pavements require a frost protection layer. This layer functions the same way in either a flexible or a rigid pavement. (See paragraph 2-3d.)

e. Subgrade. The subgrade is the compacted soil layer that forms the foundation of the pavement system. Subgrade soils are subjected to lower stresses than the surface, base, and subbase courses. Since load stresses decrease with depth, the controlling subgrade stress usually lies at the top of the subgrade. The combined thickness of subbase, base, and wearing surface must be great enough to reduce the stresses occurring in the subgrade to values that will not cause excessive distortion or displacement of the subgrade soil layer. (See paragraph 2-3e for factors affecting subgrade behavior.)

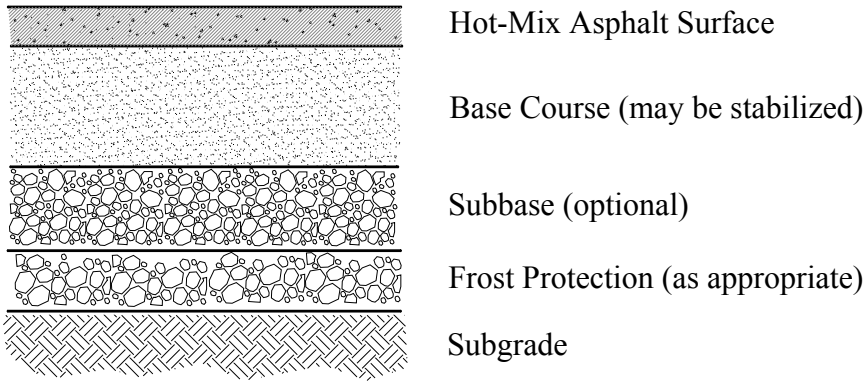

FIGURE 2-4. TYPICAL FLEXIBLE PAVEMENT STRUCTURE.

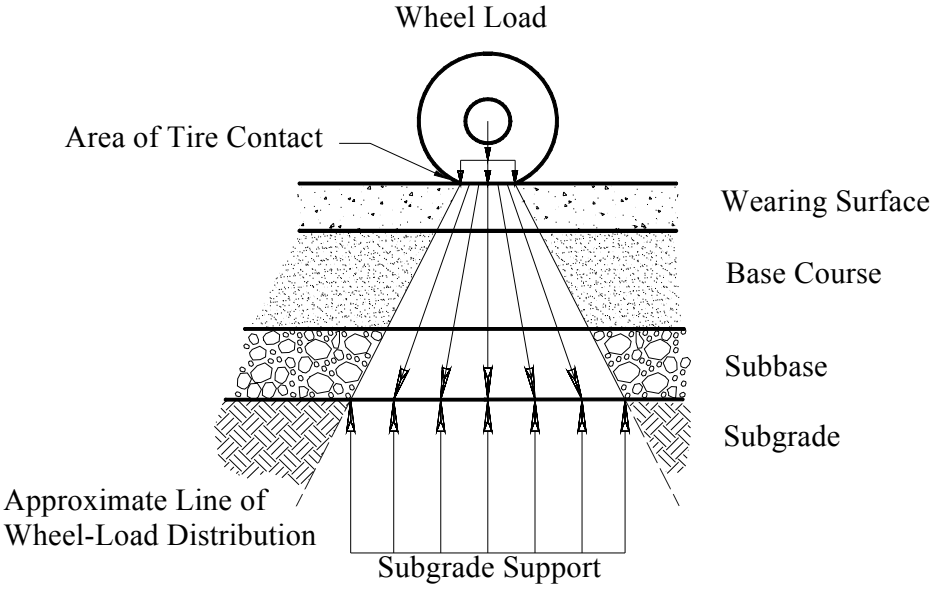

FIGURE 2-5. DISTRIBUTION OF LOAD STRESS IN FLEXIBLE PAVEMENT.

2-5. AIRPORT PAVEMENT OVERLAYS. Airport pavement overlays may correct deteriorating pavement surfaces, improve ride quality or surface drainage, maintain structural integrity, or increase pavement strength. Overlays are used when a pavement is damaged by overloading, requires strengthening to serve heavier aircraft, shows severe ponding because of uneven settling, or has simply served its design life and is worn out. Airport pavement overlays generally consist of either Portland cement concrete or bituminous concrete, and the resulting pavement system may be classified as either rigid or flexible for load-support purposes.

2-6. RECYCLED PAVEMENT STRUCTURES. The pavement elements discussed in paragraphs 2-4 and 2-5 also apply to pavements composed of recycled layers except that in-situ materials are recycled and used in place of importing selected materials. In-situ materials may be crushed, blended, rehandled, and/or treated to produce a controlled pavement layer. Recycled layers may make up the entire pavement structure or be used in combination with existing and/or new pavement layers.

CHAPTER 3. PAVEMENT DISTRESS.

3-1. GENERAL. Various external signs or indicators make the deterioration of a pavement apparent, and often reveal the probable causes of the failure. This chapter provides a detailed discussion and description of the types of pavement distress and relates them to likely causal factors.

3-2. TYPES OF PAVEMENT DISTRESS. The discussions of problems related to pavement distress are generally based on whether the pavement has a concrete or bituminous surface type. However, while different distresses possess their own particular characteristics, the various types generally fall into one of the following broad categories:

a. Cracking

b. Distortion

c. Disintegration

d. Loss of skid resistance

ASTM D 5340, *Test Method for Airport Pavement Condition Surveys,* provides detailed examples of each distress. The Pavement-Transportation Computer Assisted Structural Engineering (PCASE) software package and the Department of Defense Unified Facilities Guide include similar examples. The PCASE software is available from the U.S. Army Corp of Engineers at **http://www.pcase.com**. The Unified Facilities Guide is available from several sources, including **http://www.ccb.org/ufgs/ufgs.htm** and **http://65.204.17.188/report/doc_ufc.html**.

3-3. CONCRETE PAVEMENT DISTRESSES.

a. Cracking. Cracks in concrete pavements often result from stresses caused by expansion and contraction or warping of the pavement. Overloading, loss of subgrade support, and insufficient and/or improperly cut joints acting singly or in combination are also possible causes. Several different types of cracking can occur:

(1) Longitudinal, Transverse, and Diagonal Cracks. A combination of repeated loads and shrinkage stresses usually causes this type of distress. It is characterized by cracks that divide the slab into two or three pieces. These types of cracks can indicate poor construction techniques or weak underlying pavement layers.

(2) Corner Breaks. Load repetition, combined with loss of support and curling stresses, usually causes cracks at the slab corner. The lack of support may be caused by pumping or loss of load transfer at the joint. This type of break is characterized by a crack that intersects the joints at a distance less than or equal to one-half of the slab length on both sides, measured from the corner of the slab. A corner crack differs from a corner spall in that the crack extends vertically through the entire slab thickness; a corner spall intersects the joint at an angle.

(3) Durability "D" Cracking. "D" cracking usually appears as a pattern of cracks running in the vicinity of and parallel to a joint or linear crack. It is caused by the concrete's inability to withstand environmental factors such as freeze-thaw cycles because of variable expansive aggregates. This type of cracking may eventually lead to disintegration of the concrete within 1 to 2 feet (30 to 60 cm) of the joint or crack.

(4) Joint Seal Damage. Joint seal damage is any condition that enables soil or rocks to accumulate in the joints or that allows infiltration of water. Accumulation of materials prevents the slabs from expanding and may result in buckling, shattering, or spalling. Water infiltration through joint seal damage can cause pumping or deterioration of the subbase. Typical types of joint seal damage include stripping of joint sealant, extrusion of joint sealant, hardening of the filler (oxidation), loss of bond to the slab edges, and absence of sealant in the joint. Joint seal damage is caused by improper joint width, use of the wrong type of sealant, incorrect application, and/or not properly cleaning the joint before sealing.

(5) Shattered Slab. A shattered slab is defined as a slab where intersecting cracks break up the slab into four or more pieces. This is caused by overloading and/or inadequate foundation support.

b. Disintegration. Disintegration is the breaking up of a pavement into small, loose particles and includes the dislodging of aggregate particles. Improper curing and finishing of the concrete, unsuitable aggregates, and improper mixing of the concrete can cause this distress. Disintegration falls into four categories:

(1) Scaling, Map Cracking, and Crazing. Scaling is the disintegration and loss of the wearing surface. A surface weakened by improper curing or finishing and freeze-thaw cycles can lead to scaling. Map cracking or crazing refers to a network of shallow hairline cracks that extend only through the upper surface of the concrete. Crazing usually results from improper curing and/or finishing of the concrete and may lead to scaling of the surface. Alkali-Silica Reactivity (ASR) is another source of distress associated with map cracking. ASR is caused by an expansive reaction between aggregates containing silica and alkaline pore solutions of the cement paste.

(2) Joint Spalling. Joint spalling is the breakdown of the slab edges within 2 feet (60 cm) of the side of the joint. A joint spall usually does not extend vertically through the slab but intersects the joint at an angle. Joint spalling often results from excessive stresses at the joint or crack caused by infiltration of incompressible materials or weak concrete at the joint (caused by overworking) combined with traffic loads. Joint spalling also results when dowels, which can prevent slab movement, become misaligned either through improper placement or improper slippage preparation.

(3) Corner Spalling. Corner spalling is the raveling or breakdown of the slab within approximately 2 feet (60 cm) of the corner. It differs from a corner break in that the spall usually angles downward to intersect the joint, while a break extends vertically through the slab. The same mechanisms that causes joint spalling often causes corner spalling, but this type of distress may appear sooner because of increased exposure.

(4) Blowups. Blowups usually occur at a transverse crack or joint that is not wide enough to permit expansion of the concrete slabs. . Insufficient width may result from infiltration of incompressible materials into the joint space or by gradual closure of the joint caused by expansion of the concrete due to ASR. When expansive pressure cannot be relieved, a localized upward movement of the slab edges (buckling) or shattering will occur in the vicinity of the joint. Blowups normally occur only in thin pavement sections, although blowups can also appear at drainage structures (manholes, inlets, etc.). The frequency and severity of blowups may increase with an asphalt overlay due to the additional heat absorbed by the dark asphalt surface. They generally occur during hot weather because of the additional thermal expansion of the concrete.

c. Distortion. Distortion refers to a change in the pavement surface's original position, and it results from foundation settlement, expansive soils, frost-susceptible soils, or loss of fines through improperly designed subdrains or drainage systems. Two types of distortion generally occur:

(1) Pumping. The deflection of the slab when loaded may cause pumping, which is characterized by the ejection of water and subgrade (or subbase) material through the joints or cracks in a pavement. As the water is ejected, it carries particles of gravel, sand, clay, or silt with it, resulting in a progressive loss of pavement support that can lead to cracking. Evidence of pumping includes surface staining and base or subgrade material on the pavement close to joints or cracks. Pumping near joints indicates poor joint-load transfer, a poor joint seal, and/or the presence of ground water.

(2) Settlement or Faulting. Settlement or faulting is a difference in elevation at a joint or crack caused by upheaval or nonuniform consolidation of the subgrade or subbase material. This condition may result from loss of fines, frost heave, loss of load transfer device (key, dowel, etc.), or swelling soils.

d. Skid Resistance. Skid resistance refers to the ability of a pavement to provide a surface with the desired friction characteristics under all weather conditions. It is a function of the surface texture or the buildup of contaminants.

(1) Polished Aggregates. Some aggregates become polished quickly under traffic. Naturally polished aggregates create skid hazards if used in the pavement without crushing. Crushing the naturally polished aggregates creates rough angular faces which provide good skid resistance.

(2) Contaminants. Rubber deposits building up over a period of time will reduce the surface friction characteristics of a pavement. Oil spills and other contaminants will also reduce the surface friction characteristics.

3-4. BITUMINOUS PAVEMENT DISTRESSES.

a. Cracking. Cracks in bituminous pavements are caused by deflection of the surface over an unstable foundation, shrinkage of the surface, thermal expansion and contraction of the surface, poorly constructed lane joints, or reflection cracking. Five types of cracks commonly occur in these types of pavements:

(1) Longitudinal and Transverse Cracks. Longitudinal and transverse cracks often result from shrinkage or contraction of the bituminous concrete surface. Shrinkage of the surface material is caused by oxidation and age hardening of the asphalt material. Contraction is caused by thermal fluctuations. Poorly constructed lane joints may accelerate the development of longitudinal cracks.

(2) Alligator or Fatigue Cracking. Alligator cracks refer to interconnected cracks that form a series of small blocks resembling alligator skin. They may be caused by fatigue failure of the bituminous surface under repeated loading or by excessive deflection of the asphalt surface over a weakened or under-designed foundation. The weakened support is usually the result of water saturation of the bases or subgrade.

(3) Block Cracking. Shrinkage of the asphalt concrete and daily temperature cycling, which results in daily stress/strain cycling, causes block cracking. These are interconnected cracks that divide the pavement into approximately rectangular pieces. This type of distress usually indicates that the asphalt has hardened significantly. Block cracking generally occurs over a large portion of the pavement area and may sometimes occur only in nontraffic areas.

(4) Slippage Cracks. Slippage cracks appear when braking or turning wheels cause the pavement surface to slide and deform. This usually occurs when there is a low-strength surface mix or poor bond between the surface and the next layer of the pavement structure. These cracks are crescent or half-moon-shaped with the two ends pointing away from the direction of traffic.

(5) Reflection Cracking. Vertical or horizontal movements in the pavement beneath an overlay cause this type of distress. These movements may be due to expansion and contraction caused by temperature and moisture changes or traffic loads. The cracks in asphalt overlays reflect the crack pattern in the underlying pavement. They occur most frequently in asphalt overlays on Portland cement concrete pavements. However, they may also occur on overlays of asphalt pavements wherever cracks in the old pavement have not been properly repaired.

b. Disintegration. Disintegration in a bituminous pavement is caused by insufficient compaction of the surface, insufficient asphalt in the mix, loss of adhesion between the asphalt coating and aggregate particles, or overheating of the mix. The most common type of disintegration in bituminous pavements is raveling. Raveling is the wearing away of the pavement surface caused by the dislodging of aggregate particles and the loss of asphalt binder. As the raveling continues, larger pieces are broken free, and the pavement takes on a rough and jagged appearance.

c. Distortion. Distortion in bituminous pavements is caused by foundation settlement, insufficient compaction of the pavement courses, lack of stability in the bituminous mix, poor bond between the surface and the underlying layer of the pavement structure, and swelling soils or frost action in the subgrade. Four types of distortion commonly occur:

(1) Rutting. A rut is characterized by a surface depression in the wheel path. In many instances, ruts become noticeable only after a rainfall when the wheel paths fill with water. This type of distress is caused by a permanent deformation in any one of the pavement layers or subgrade, resulting from the consolidation or displacement of the materials due to traffic loads.

(2) Corrugation and Shoving. Corrugation results from a form of plastic surface movement typified by ripples across the surface. Shoving is a form of plastic movement resulting in localized bulging of the pavement surface. Corrugation and shoving can be caused by a lack of stability in the mix and a poor bond between material layers.

(3) Depression. Depressions are localized low areas of limited size. In many instances, light depressions become noticeable only after a rain, when ponding creates "birdbath" areas. Depressions may result from traffic

heavier than that for which the pavement was designed, localized settlement of the underlying pavement layers, or poor construction methods.

(4) Swelling. An upward bulge in the pavement's surface characterizes swelling. It may occur sharply over a small area or as a longer gradual wave. Both types of swell may be accompanied by surface cracking. A swell is usually caused by frost action in the subgrade or by swelling soil.

d. Loss of Skid Resistance. Factors that decrease the skid resistance of a pavement surface and can lead to hydroplaning include too much asphalt in the bituminous mix, too heavy a tack coat, poor aggregate subject to wear, and buildup of contaminants. In bituminous pavements, a loss of skid resistance may result from the following:

(1) Bleeding. Bleeding is characterized by a film of bituminous material on the pavement surface that resembles a shiny, glass-like, reflecting surface that usually becomes quite sticky. It is caused by excessive amounts of asphalt cement or tars in the mix and/or low air-void content and occurs when asphalt fills the voids in the mix during hot weather and then expands out onto the surface of the pavement. Bleeding may also result when an excessive tack coat is applied prior to placement of the asphalt surface material. Since the bleeding process is not reversible during cold weather, asphalt or tar will accumulate on the surface. Extensive bleeding may cause a severe reduction in skid resistance.

(2) Polished Aggregate. Aggregate polishing is caused by repeated traffic applications. It occurs when the aggregate extending above the asphalt is either very small, of poor quality, or contains no rough or angular particles to provide good skid resistance.

(3) Fuel Spillage. Continuous fuel spillage on a bituminous surface will soften the asphalt. Areas subject to only minor fuel spillage will usually heal without repair, and only minor damage will result.

(4) Contaminants. Accumulation of rubber on the pavement surface will reduce the skid resistance of a pavement. Buildup of rubber deposits in pavement grooves will reduce the effectiveness of the grooves and increase the likelihood of hydroplaning

3-5. DRAINAGE OF AIRPORT PAVEMENTS.

a. A proper drainage system is essential to preventive maintenance. Probably no other factor plays such an important role in determining the ability of a pavement to withstand the effects of weather and traffic. The drainage system collects and removes surface water runoff, removes excess underground water, lowers the water table, and protects all slopes from erosion. An inadequate drainage system can cause saturation of the subgrade and subbase, damage to slopes by erosion, and loss of the load-bearing capacity of the paved surfaces. Whenever pavement failure occurs, the airport should investigate the possibility of deficient drainage.

b. The damage mechanism of free water in the pavement system is related to the amount of free water in the boundaries between the structural layers of the pavement system. When water fills the voids and spaces at the boundaries between layers, heavy wheel loads applied to the surface of the pavement produce impacts on the water comparable to a water-hammer type of action. The resulting water pressure causes erosion of the pavement structure and ejection of the material out of the pavement.

c. There are two general classes of drainage systems: surface and subsurface. Classification depends on whether the water is on or below the surface of the ground at the point where it is first intercepted or collected for disposal. Where both types of drainage are required, it is generally good practice for each system to function independently.

(1) Surface Drainage. Surface drainage controls, collects, and disposes of water from rainstorms and melting snow and ice that accumulate on the surface of the pavement and nearby ground. Surface drainage of pavements is achieved by constructing the pavement surface and adjacent ground in a way that allows for adequate runoff. The water may be collected at the edges of the paved surface in ditches, gutters, and catch basins. Surface water should not be allowed to enter a subdrainage system as it often contains soil particles in suspension. As the water percolates through the granular material of the subdrain, these particles cause it to silt up. Inevitably, some water will enter the pavement structure through cracks, open joints, and other surface openings, but this penetration may be kept to a minimum by proper surface maintenance procedures.

(2) Subsurface Drainage. Subsurface drainage is provided for the pavement by a permeable layer of aggregate or permeable stabilized layers—such as cement-treated or asphalt-treated layers under the full width of the traveled way—with longitudinal pipes for collecting the water and outlet pipes for rapid removal of the water from the subsurface drainage system. Subsurface drains may also consist of perforated collection pipes or conduits in a permeable sand or gravel trench encased in geotextiles with outlet pipes. These systems remove excess water from pavement foundations to prevent weakening of the base and subgrade and to reduce damage from frost action. Subsurface drainage trenches placed at the pavement edge also prevent surface runoff moisture from entering the pavement structure from the pavement perimeter.

d. The current version of AC 150/5320-5, *Airport Drainage*, contains additional guidance and technical information.

CHAPTER 4. GUIDELINES FOR INSPECTION OF PAVEMENTS.

4-1. INTRODUCTION TO PAVEMENT INSPECTION. This chapter presents guidelines and procedures for inspection of airport pavements. Airports should prioritize the upkeep and repair of all pavement surfaces in the aircraft operating areas of the airport to ensure continued safe aircraft operations. While deterioration of the pavements from usage and exposure to the environment cannot be completely prevented, a timely and effective maintenance program can minimize this deterioration. Adequate and timely maintenance is the greatest single means of controlling pavement deterioration. Many cases exist where inadequate maintenance characterized by the absence of a vigorously followed inspection program directly attributed to failures of airport pavements and drainage features. It should be noted that maintenance, no matter how effectively carried out, cannot overcome or compensate for a major design or construction inadequacy. However, it can prevent the total and possibly disastrous failure that can result from such deficiencies. The maintenance inspection can reveal at an early stage where a problem exists and thus provide enough warning and time to permit corrective action. Postponement of minor maintenance can develop into a major pavement repair project.

Although there are numerous distress types associated with airfield pavements, a particular concern on airfield pavements is the possibility that pavement distress will generate loose material that may strike aircraft propellers or be ingested into jet engines. This loose material and the resulting damage are commonly labeled as foreign object debris/damage (FOD). FOD can cause considerable damage to an aircraft and increase the cost of maintaining the aircraft in a safe operating condition. More important, FOD can cause undetected damage to an aircraft, making it unsafe to operate. In addition to the pavement inspection procedures noted below, all pavement inspections should address the issue of FOD to minimize its potential hazard. The most recent version of AC 150/5380-5, *Debris Hazards at Civil Airports,* provides guidance on reducing FOD hazards.

4-2. INSPECTION PROCEDURES. Maintenance is an ongoing process and a critical responsibility of airport personnel. Truly effective maintenance programs require a series of scheduled, periodic inspections or surveys, conducted by experienced engineers, technicians, or maintenance personnel. These surveys must be controlled to ensure that each element or feature being inspected is thoroughly checked, potential problem areas are identified, and proper corrective measures are recommended. The maintenance program must provide for adequate followup of the inspection to ensure that the corrective work is expeditiously accomplished and recorded. Although the organization and scope of maintenance activities will vary in complexity and degree from airport to airport, the general types of maintenance required are similar, regardless of airport size or extent of development.

a. Inspection Schedules. The airport is responsible for establishing a schedule for pavement inspections. Inspection schedules should ensure that all areas, particularly those that are not observed daily, are thoroughly checked. All paved areas should be inspected at least twice a year. In temperate climates, inspections should occur once in the spring and once in the fall. Severe storms or other conditions that may adversely affect the pavement may necessitate additional thorough inspections. Airport personnel should also solicit reports from airport users and conduct daily drive-by-type inspections.

b. Record keeping. The airport should prepare and maintain complete records of all inspections and maintenance performed. These records should document the severity level of existing distress types, their locations, their probable causes, remedial actions, and results of follow up inspections and maintenance. In addition, the files should contain information on potential problem areas and preventive or corrective measures identified. Records of materials and equipment used to perform all maintenance and repair work should also be kept on file for future reference. Such records may be used later to identify materials and remedial measures that may reduce maintenance costs and improve pavement serviceability.

4-3. FRICTION SURVEYS. Airports should maintain runway pavements that provide surfaces with good friction characteristics under all weather conditions. Parameters that affect the skid resistance of wet pavement surfaces include the following:

a. Texture depth

b. Rubber deposits

c. Paint marking

d. Pavement abnormalities, such as rutting, raveling, and depression

Visual observations made during a pavement inspection are an inadequate predictor of skid resistance. The current version of AC 150/5320-12, *Measurement, Construction, and Maintenance of Skid-Resistant Airport Pavement Surfaces*, provides guidance on frequency and procedures for conducting friction surveys.

4-4. NONDESTRUCTIVE TESTING. In addition to collecting information from visual inspections of the pavement area and about runway history, airports should consider collecting data from nondestructive testing. Such data are used to evaluate the pavement load-carrying capacity. Loads are applied to the pavement through loading plates or wheels, and the pavement deflection response is recorded. The stiffness or strength of the airport pavement can be related to the magnitude of these deflections. Nondestructive testing involves a large number of readings, and a statistical average is used. Instructions for taking the measurements and evaluating the test results to determine the load-carrying capacity of the pavement structure are contained in the current version of AC 150/5370-11, *Use of Nondestructive Testing Devices in the Evaluation of Airport Pavements*.

4-5. DRAINAGE SURVEYS. The maintenance program should take into account the importance of adequate drainage of surface and ground water because water is directly or partly responsible for many pavement failures and deterioration. Sufficient drainage for collection and disposal of surface runoff and excess ground water is vital to the stability and serviceability of pavement foundations. Trained personnel should conduct periodic and complete inspections of drainage systems and record and correct defective conditions of surface and subsurface drainage systems. Runway and taxiway edge drains and catch basins should be inspected at intervals (i.e., spring, summer, fall, and winter) and monitored following unusually heavy rainfall. The personnel making the inspection should look for distress signals that may indicate impending problems. These distress signals include the following:

a. Ponding of water

b. Soil buildup at pavement edge preventing runoff

c. Eroded ditches and spill basins

d. Broken or displaced inlet grates or manhole covers

e. Clogged or silted inlet grates and manhole covers

f. Blocked subsurface drainage outlets

g. Broken or deformed pipes

h. Backfill settlement over pipes

i. Erosion around inlets

j. Generally poor shoulder shaping and random erosion

k. Discoloration of pavement at joints or cracks

4-6. PAVEMENT MANAGEMENT SYSTEMS. Pavement management systems (PMSs) provide airports with one method of establishing an effective maintenance and repair system. A PMS is a systematic and consistent procedure for scheduling maintenance and rehabilitation based on maximizing benefits and minimizing costs. A pavement management system not only evaluates the present condition of a pavement, but also can predict its future condition with a pavement condition indicator. By projecting the rate of deterioration, a PMS can facilitate a life-cycle cost analysis for various alternatives and help determine when to apply the best alternative.

a. The primary component of any PMS is the ability to track a pavement's deterioration and determine the cause of the deterioration. This requires an evaluation process that is objective, systematic, and repeatable. One such process is the Pavement Condition Index (PCI). The PCI is a rating of the surface condition of a pavement and measures functional performance but will also provide some indication of structural performance. Periodic PCI determinations on the same pavement will show the change in performance level over time. The PCI is determined

in accordance with procedures contained in ASTM D 5340, *Standard Test Method for Airport Pavement Condition Index Surveys*.

b. The current version of AC 150/5380-7, *Pavement Management System,* outlines the basic concepts of a PMS.

4-7. PAVEMENT PERFORMANCE. Airports can use the pavement condition survey in conjunction with the PCI to develop pavement performance data. Distress intensity recorded over time helps determine how the pavement is performing. The rate at which the distress intensity increases is a good indicator of the pavement performance.

4-8. PAVEMENT MAINTENANCE MANAGEMENT PROGRAM. Any airport requesting Federal funds for a project to replace or reconstruct a pavement under the airport grant assistance program must have implemented a pavement maintenance program. Appendix 1 contains the minimum requirements for such a program.

CHAPTER 5. MATERIALS AND EQUIPMENT.

5-1. GENERAL. Normal day-to-day pavement maintenance requires only hand tools, but some maintenance necessitates specialized equipment. For example, cleaning out joints in PCC pavements is best accomplished with hand-operated, motor-driven machines especially designed for the task. Specialized sawing equipment may be required to establish the proper joint sealant shape dimension when sealing cracks in asphalt pavement. Equipment to apply nontoxic herbicides may be necessary to prevent weeds from growing until sealant materials can be applied. Expedient plow-type devices also aid in removing old joint material. Joint sealing can be accomplished by hand pouring from kettles with narrow spouts, but some sealing materials require pressure application with specialized equipment.

Most normal maintenance projects, however, require the following:

a. Mechanical Hammers. Mechanical hammers can be used to break concrete slabs for easy removal. These hammers can also drill slabs. When using mechanical hammers, maintenance staff should take precautions to avoid damaging adjacent slabs.

b. Trailer-Type Asphalt Kettles. The use of trailer-type asphalt kettles can expedite patching and spot sealing. Kettles equipped with a powered hand-spray bar are valuable maintenance and repair items.

c. Compaction Equipment. Compaction of asphalt patches and subbase repairs can be accomplished with hand tampers, but small vibrating compactors produce better and more-uniform results. These vibrating compactors are easy to operate, are transportable in small vehicles, work well in confined areas, and do an excellent job.

d. Distributors. A large-scale project such as seal coating an extensive area requires specialized equipment, including pressure distributors for bitumen, aggregate spreaders, and rollers. Generally, contractors or others organized for such large-scale activities should perform this type of work.

e. Work Crew. Two to six people, trained in the various techniques of repairing and familiar with the tools available to them, can perform the routine maintenance required by pavement surfaces. If the work requires more staff, it will probably be a major repair and require methods, materials, and equipment beyond those used for normal maintenance.

5-2. COMMON MATERIALS FOR MAINTENANCE AND REPAIR. The materials listed below are commonly used for maintenance and repair of pavements.

a. Bituminous Concrete. Bituminous concrete is a blend of asphalt cement and well-graded, high-quality aggregates. The materials are mixed in a plant and placed and compacted while hot. Bituminous concrete is used for patching and overlay of airfield pavements.

b. Tack Coat. A tack coat, usually a light application of emulsified asphalt, is applied to an existing pavement to provide a bond with an overlying course, such as a bituminous overlay. A tack coat is also used on the sides of an existing pavement that has been cut vertically before patching. Asphalt emulsions are manufactured in several grades and are selected by the desired setting time.

c. Prime Coat. A prime coat of emulsified or cutback asphalt is applied to a nonbituminous base course for the following purposes:

(1) To waterproof the surface of the base

(2) To plug capillary voids

(3) To promote adhesion between the base and the surface course

d. Fog Seal. A fog seal is a light application of emulsified asphalt used to rejuvenate the surface of a bituminous pavement.

e. Aggregate Seal. Used to seal the surface of weathered pavements, aggregate seals consist of sprayed asphalts that are immediately covered with aggregate and rolled. The FAA does not recommend aggregate seals for airfield pavements because of the potential for propeller and engine damage caused by loose aggregates.

f. Slurry Seal. A slurry seal is a mixture of asphalt emulsion, fine aggregate, mineral filler, and water. The mixture is prepared in slurry form and applied in a film approximately 1/8 inch (3 mm) thick. Slurry seals are used to seal small cracks, correct surface conditions, and improve the skid resistance of pavement surfaces.

g. Coal-Tar Sealer. Coal-tar sealer is a coal-tar-base product designed to coat the surface and protect the pavement against fuel spill damage and the intrusion of air and water. It is cold applied and should be periodically reapplied and maintained.

h. Crack and Joint Sealing Material for Bituminous Pavement. Material for sealing cracks should meet ASTM standards for the type of pavement and service for which the pavement is intended.

(1) ASTM D 3405, *Joint Sealants, Hot-Poured, for Concrete and Asphalt Pavements*.

(2) ASTM D 3581, *Joint Sealants, Hot-Poured, Jet-Fuel Resistant Type, for Portland Cement Concrete and Tar-Concrete Pavements*, is satisfactory for areas subject to fuel spillage.

(3) Some airports have used silicone sealants to seal cracks and joints in bituminous pavements. Proper use of silicone sealants requires that the material modulus be matched to the application.

i. Crack and Joint Sealing Material for Concrete Pavement. Material for sealing joints in Portland cement concrete pavement may be hot- or cold-applied compounds, as long as they meet the following standards:

(1) ASTM D 1854, *Jet Fuel-Resistant Concrete Joint Sealer, Hot-Poured Elastic Type*.

(2) ASTM D 3405, *Joint Sealants, Hot-Poured, for Concrete and Asphalt Pavements*.

(3) ASTM D 3406, *Joint Sealants, Hot-Poured, Elastomeric Type for Portland Cement Concrete Pavements.*

(4) ASTM D 3569, *Joint Sealant, Hot-Poured, Elastomeric, Jet-Fuel Resistant Type for Portland Cement Concrete Pavements*.

(5) Federal Specification SS-S-200, *Sealing Compounds, Two Component, Elastomeric, Polymer Type, Jet-Fuel Resistant, Cold Applied.*

(6) ASTM D 5893, *Standard Specification for Cold Applied, Single Component, Chemically Curing Silicone Joint Sealant for Portland Cement Concrete Pavements.*

j. Concrete. Concrete is a blend of Portland cement, fine and coarse aggregate, and water, with or without additives. Concrete is used to repair a distressed Portland cement concrete pavement so it may be used at its original designed capacity.

k. Epoxy Grouts and Concretes. There are many types of epoxy resins; the type to be used depends on the intended application. Under normal conditions, mixed resins may be workable up to 1 hour after mixing. Repairs with epoxy materials are costly, so their use should be limited to small areas and their application left to experienced personnel.

5-3. EQUIPMENT USED FOR PAVEMENT MAINTENANCE. There are many different types and models of equipment airports can use for pavement maintenance. Maintenance crews commonly use the equipment listed below for the following types of projects:

a. Pavement Removal.

(1) Power Saws. A pavement power saw is usually a one-person-operated, dolly-mounted unit with an abrasive circular blade. This type of saw can cut a straight line through asphalt or concrete pavements and leave vertical sides.

(2) Cutting Disks. A cutting disk is a circular, heavy-duty steel plate with a sharpened edge. The disk is usually attached to a motor grader or other piece of equipment capable of pushing the disk through an asphalt pavement. It is limited to approximately 3 inches (8 cm) in cutting depth. Since the cutting disk is much faster than a saw, its use should be considered when larger areas must be removed.

(3) Jackhammers. Jackhammers with a chisel head are commonly used for cutting pavement surfaces.

(4) Pavement Grinders. A pavement grinder may be a one-person-operated, dolly-mounted unit with an abrasive cylindrical head 4 inches (10 cm) or more wide, or it may be variable-width diamond grinding equipment. Diamond grinding is a common rehabilitation technique used for tasks as varied as paint removal and pavement texturing.

(5) Cold Milling Machines. Cold milling machines use a rotating mandrel with cutting bits to remove various depths of pavement material. Bits can be added or removed to vary the cutting width and roughness. Advantages of cold milling include speed of removal, precision of removal, and grade control.

(6) Hand Tools. Hand tools can be used to make vertical cuts through pavements and to break up deteriorated pavement. Chisels, sledgehammers, shovels, pry bars, and picks all into this category of equipment.

(7) Front-end Loaders and Skid-steer Loaders. Front-end loaders are useful when loading trucks with removed pavement. Skid-steer loaders are small versatile loaders that can be equipped with numerous attachments. Their small size and maneuverability make them ideal for maintenance activities.

(8) Dump Trucks. Dump trucks are used to haul removed pavement and repair materials.

b. Maintenance Equipment.

(1) Asphalt Kettle. Asphalt kettles are usually small-tractor-mounted units that have the capacity to heat and store 40 to 500 gallons (150 – 2000 liters) of bituminous material. A pump forces the liquid material through spray nozzles located on a hand-held hose. These units are used for priming and tacking on small jobs and for crack or surface sealing of bituminous surfaces.

(2) Aggregate Spreaders. Aggregate spreaders can be either truck-mounted or separate units. They are used to evenly place a controlled amount of sand or aggregate on an area.

(3) Hand Tools. Rakes, lutes, and other such hand tools are used to move and level material placed in a patch area.

c. Compaction Equipment.

(1) Vibratory Plate Compactors. Vibratory plate compactors are hand-operated units used to compact granular base or bituminous plant-mix materials.

(2) Vibratory and Non Vibratory Steel-Wheel Rollers. Steel-wheel rollers are used to compact material, including bituminous concrete in patchwork areas. Smaller rollers can be hand operated, while large rollers are self-powered.

(3) Rubber-Tired Rollers. Rubber-tired rollers are self-powered and used to compact bituminous concrete.

d. Crack and Joint Sealing Equipment.

(1) Joint Plow. A joint plow is used to remove old sealer from joints. This is usually a specially made tool attached to a skid-steer loader.

(2) Joint Router. A joint router is used to clear existing cracks or joints to be resealed. A router is usually a self-powered machine operating a rotary cutter or revolving cutting tool. A rotary routing tool with a V-shaped end can be used for cleaning out random cracks. The FAA does not recommend rotary cutting tools for Portland cement concrete pavements.

(3) Power Brush. A power-driven wire brush may be used to clean joints after all of the old joint sealer has been removed.

(4) Air Compressor and Sand Blasting. Sand blasting may be used for final removal of old joint sealant, and the FAA recommends it as the final cleaning method for concrete surfaces prior to application of new sealant. Joints and cracks should be blown out with clean compressed air immediately before applying new sealer. Air compressors should be equipped with oil and moisture traps to prevent contaminating the cleaned surface.

(5) Pavement Sweeper. A pavement sweeper can be used for cleaning the pavement surface and removing excess aggregate. Cleaning operations are necessary in preparation for seal coating and crack filling.

(6) Heating Kettle. A heating kettle is a mobile, indirect-fired double boiler used to melt hot-applied joint sealing material. It is equipped with a means to agitate and circulate the sealer to ensure uniform heating and melting of the entire charge in the kettle. Sealants may be applied to joints with a pressure base attached directly to a pump unit on the kettle.

(7) Pouring Pot. A pouring pot is hand carried and used to pour hot sealing materials into a previously prepared crack or joint.

(8) High-pressure Water Sprayer. A water sprayer can be used to clean out joints prior to resealing and to clean vertical faces of pavement to be patched.

(9) Hot Air Lance. A hot air lance enhances adhesion by drying and heating cracks in existing bituminous material while removing debris prior to crack sealing.

e. Removal of Pavement Markings.

(1) High Pressure Water Jet. A high-pressure water jet, with proper selection of spray nozzle and pressure, can be highly effective in removal of pavement markings.

(2) Abrasive Blasting. Pavement markings can be removed by the impact of edged particles accelerated by pressurized air, although care must be exercised to avoid damage to the pavement surface.

(3) Solvent Cleaning. Chemical agents can be employed to remove markings from pavement, but proper attention must be paid to environmental concerns and cleanup.

CHAPTER 6. METHODS OF REPAIR.

6-1. GENERAL. This chapter describes various methods airports can use to correct airfield pavement distress. While these repair methods apply to specific types of distress and pavements, they should all take into account the possibility of foreign object damage (FOD) to aircraft. Untidy repair activities may leave potential FOD at or near the repair sites. Improperly constructed repairs may disintegrate and cause a FOD potential. All maintenance activities must include quality control monitoring to assure that repairs are conducted properly and clean-up activities undertaken to remove this potential. The current version of AC 150/5380-5, *Debris Hazards at Civil Airports,* provides additional guidance to help eliminate debris hazards associated with maintenance activities.

a. Visible evidence of excessive stress levels or environmental distress in pavement systems may include cracks, holes, depressions, and other types of pavement distresses. The formation of distresses in airport pavements may severely affect the structural integrity, ride quality, and safety of airport pavements. To alleviate the effects of distresses and to improve the airport pavement serviceability, airports should adopt an effective and timely maintenance program and adequate repair procedures.

b. In all cases of pavement distress, the first step in rehabilitating a pavement is to determine the causes of distress. Then, the proper procedures for repair—which will not only correct the damage, but also prevent or retard its further occurrence—may be applied. Pavement repairs should be made as quickly as possible after the need for them arises to ensure continued and safe aircraft operations. Airports should perform repairs at early stages of distress, even when the distresses are considered minor. A delay in repairing pavements may allow minor distresses to progress into major failures. While deterioration of pavements due to traffic and adverse weather conditions cannot be completely prevented, maintenance and repair programs can significantly reduce the rate of deterioration and minimize the damage.

c. Weather conditions may limit repair measures undertaken to prevent further pavement damage. For example, rehabilitation by crack filling is more effective in cool and dry weather conditions, whereas pothole patches, seal coats, and other surface treatments require warm, dry weather for best results. This does not mean that resurfacing work cannot be performed under cold and damp conditions or that crack filling cannot be done in warm weather. Rather, these repairs just require much greater care when made during such periods.

d. The minimum depth of repair for Portland cement concrete should be 2 inches (5 cm). Repairs made thinner than 2 inches (5 cm) usually deteriorate quickly on an airfield pavement. (Most distresses needing repair will extend at least 2 inches (5 cm) into the pavement.) Concrete pavement repairs which are thinner than 2 inches (5 cm) may benefit from the use of epoxy materials.

6-2. REPAIR METHODS FOR PORTLAND CEMENT CONCRETE PAVEMENTS.

a. Crack Repair and Sealing. Sealing cracks prevents surface moisture from entering the pavement structure. This type of repair first requires establishing a properly shaped sealant reservoir, which should be done with a saw rather than with router equipment because routers use a mechanical impact to remove material and can cause micro-cracks in the concrete.

(1) Longitudinal, Transverse, and Diagonal Cracks. The procedures for repairing these types of cracks are as follows:

(a) Saw a groove to the width and depth recommended by the sealant manufacturer. The width needs to be sufficient to allow the material to stretch and contract with movement in the pavement. Common hot-pour materials typically require a width equal to the depth. Silicone materials typically require a width twice the dimension of the depth. The FAA does not recommend widths smaller than 3/8 inches (10 mm) because such widths are difficult to fill with sealant material.

(b) Sand blast both sides of the sealant reservoir, and clean it out with compressed air. The groove must be dry and free of dirt, dust, and other material that might prevent bonding of the sealant.

(c) Place a bond breaker at the proper depth to establish the joint sealant reservoir. Bond breakers are necessary to prevent bonding of the sealant material to the bottom of the crack. Improper bonding restricts the expansion and contraction of the sealant material and can cause premature failure. Backer rod is commonly used to

prevent bonding and to establish the proper joint reservoir dimensions. Backer rod is an extruded, chemically inert, closed-cell polyethylene "rope" designed to effectively fill in the gaps in the joint. The backer rod is sized slightly larger than the width of the joint and is simply pushed to the desired depth.

(d) Fill the joint reservoir with sealant, recessing the sealant approximately ¼ inches (6 mm) below the pavement surface. Excess sealant on the pavement surface does not assist in sealing the crack and is prone to tracking and damage from wheels and snow removal equipment.

(2) Corner Cracks. Structural distress requires full-depth repairs. Corner cracks (cracking of the panel between two adjacent joints), cracks more than ¾-inches (19 mm) wide with spalling, cracks more than 1-1/2-inches (38 mm) wide, and/or cracks associated with loss of subgrade support typically signify the presence of structural distress. The procedures for repairing these types of cracks are as follows:

(a) Make full-depth saw cuts at constructed joints. The FAA recommends that full-depth cuts be made at a distance of at least 2 feet (60 cm) beyond the limits of the crack. Make the saw cuts so the repair area is rectangular when the repair is for wide cracks that transect a panel. For corner cracks, cut the repair area square.

(b) Use a jackhammer to remove material within the limits of the sawcuts. When using a tractor-mounted hammer or removing the concrete by lifting, make a second saw cut inside the perimeter cuts to provide expansion. Remove by hand any loose materials that remain. During the repair, try to minimize any disturbance to the subgrade soils or base materials.

(c) Restore subgrade or subbase materials to the base elevation of the panel being repaired.

(d) Use tie-bars consisting of #4 deformed bars (#5 bars for pavements more than 12-inches (30 cm) thick) in the faces of the parent panel. Install by drilling into the face and using an epoxy bonding agent. Use equidistant spacing of the bars, but do not install them more than 24-inches (60 cm) apart. When spacing bars, do not allow their ends to overlap with those of other tie-bars or dowels.

(e) Use dowel bars in the joint that parallels the direction of traffic. On aprons and areas where traffic may be oblique to joints, install dowels in both joint faces. Dowels are installed by drilling and spaced at least one bar spacing away from faces parallel to the dowel bar. Space dowel bar ends at least one bar spacing apart at corners of intersecting joints. Oil exposed dowel bar ends prior to backfilling with concrete.

(f) Install nonabsorbent board within the limits of the joint seal reservoirs along the adjacent concrete panels. When repairing multiple panels, restore the joint seal reservoirs with the nonabsorbent filler board.

(g) Backfill the repair area with concrete, being sure to consolidate the concrete along the limits of repair. Exercise caution when working adjacent to existing concrete faces during consolidation, and watch for segregation of the concrete.

(h) After the concrete cures, remove the filler board by sawing. Reinstall joint seal material.

(3) "D" Cracking. This type of distress usually requires repairing the complete slab since "D" cracking will normally reappear adjacent to the repaired areas. Temporary repairs can be made using the technique noted in paragraph 6-2a(2) or 6-2b(1).

(4) Joint Seal Damage. The sequence of operations for preparing joints for resealing is as follows:

(a) Use a joint plow or diamond saw blade to remove the joint sealing material to the full depth of the reservoir for contraction and construction joints. As a minimum, remove the joint sealant material to a depth sufficient to establish a proper shape factor for the new sealant material.

(b) When changing the material type of the joint seal, the FAA recommends removing old material from the reservoir by re-facing the side walls. Re-facing will result in a change to the reservoir shape factor (width to depth ratio). Consult the manufacturer of the replacement joint seal material about the recommended shape factor. If a saw is used to reface the joint, flush the joint with water immediately after sawing. Remove any remaining debris by sand blasting each face of the joint reservoir.

(c) If the same material will be used to replace the existing joint seal, clean the reservoir with high-pressure water or sand blasting.

(d) Immediately prior to sealing, blow out the joint with clean, oil-free compressed air to remove sand, dirt, and dust.

(e) Install new dry backer rod.

(f) Seal joints with hot or cold compounds. Sealants should be placed as noted in paragraph 6.2a(1).

b. Disintegration. If not impeded in its early stages, disintegration can progress rapidly until the pavement requires complete rebuilding.

(1) Scaling, Map Cracking, and Crazing. This distress is often noticeable with little or no surface deterioration. Severe cases of scaling, map cracking, or crazing can produce considerable FOD, which can damage propellers and jet engines. If the distress is severe and produces FOD, the repair method is to remove the immediate surface and provide a thin bonded overlay. The procedures for repairing these types of distress are as follows:

(a) Make a vertical cut with a concrete saw 2 inches (5 cm) in depth and approximately 2 inches (5 cm) back of the affected area.

(b) Remove all unsound concrete until sound, intact material has been reached. Remove the unsound concrete with air hammers, pneumatic drills, shot blasters, or grinding equipment, and blow out the area with compressed air.

(c) Clean the area to be repaired with high-pressure water. Allow the patch area to dry completely if required by the patch material specification.

(d) Treat the surface with a grout mixture to ensure a good bond between the existing pavement and the new concrete. Apply the grout immediately before placing the patch mixture and spread with a stiff broom or brush to a depth of 1/16 inch (2 mm).

(e) If the repair crosses or abuts a working joint, place a thin strip of wood or metal coated with bond-breaking material in the joint groove, and tamp the new mixture into the old surface. The mix should be air-entrained and designed to produce a no slump concrete, which will require tamping to place in the patch.

(f) After edging the patch, finish it to a texture matching the adjacent area.

(g) After a proper cure period, fill any open joints with joint sealant prior to opening to traffic.

(2) Joint Spalling and Corner Spalling. The procedure for the repair of spalls is as follows:

(a) Make a vertical cut with a concrete saw 2 inches (5 cm) in depth and approximately 2 inches (5 cm) back of the spalled area.

(b) Remove all unsound concrete until sound, intact material has been reached. Break out the unsound concrete with air hammers or pneumatic drills and blow out the area with compressed air.

(c) Clean the area to be repaired with high-pressure water. Allow patch area to dry completely if required by the patch material specification.

(d) Treat the surface with a grout mixture to ensure a good bond between the existing pavement and the new concrete. Apply the grout immediately before placing the patch mixture and spread with a stiff broom or brush to a depth of 1/16 inch (2 mm).

(e) Place a thin strip of wood or metal coated with bond-breaking material in the joint groove and tamp the new mixture into the old surface. The mix should be air-entrained and designed to produce a no slump concrete, which will require tamping to place in the patch.

(f) After edging the patch, finish it to a texture matching the adjacent area.

(g) After a proper cure period, fill the open joint with joint sealant prior to opening to traffic.

(3) Blowups. Blowups may be repaired using the following procedures:

(a) Make a full-depth vertical cut with a concrete saw approximately 6 inches (15 cm) outside of each end of the broken area.

(b) Break out the concrete with pneumatic tools, and remove concrete down to the subbase/subgrade material.

(c) Add subbase material, if necessary, and compact.

(d) In reinforced pavement construction, use joint techniques to tie the new concrete to the old reinforced material. Dowel any replacement joints, and build them to joint specifications.

(e) Dampen the subgrade and the edges of the old grout.

(f) Place concrete on the area to be patched. Ready-mixed concrete may be used if it is satisfactory and can be obtained economically. Consider using a mixture providing high early strength in order to permit the earliest possible use.

(g) Finish the concrete so the surface texture approximates that of the existing pavement.

(h) Immediately after completing finishing operations, properly cure the surface with either a moist cure or a curing compound.

(4) Shattered Slab. A shattered slab requires replacing the full slab. Follow the same procedures used for blowup repairs except remove unstable subgrade materials and replace with select material. Correct poor drainage conditions by installing drains for removal of excess water.

c. Distortion. If not too extensive, some forms of distortion, such as that caused by settlement, can be remedied by raising the slab to the original grade. Slabjacking procedures may be used to correct this type of distress. In slabjacking, a grout is pumped under pressure through holes cored in the pavement into the void under the pavement. This creates an upward pressure on the bottom of the slab in the area around the void. The upward pressure lessens as the distance from the grout hole increases. Thus, it is possible to raise one corner of a slab without raising the entire slab. Because of the special equipment and experience required, slabjacking is usually best performed by specialty contractors.

d. Loss of Skid Resistance. Rehabilitation treatment includes resurfacing, milling, diamond grinding, shot peening, and surface cleaning. Grooving may be considered when a loss of skid resistance is observed. Grooving does not impact the surface texture but does provide a channel for water that becomes trapped between a pavement and the tire to escape. Grooving thus minimizes the potential for hydroplaning during wet conditions.

(1) Polished Aggregate. Since polished aggregate distress normally occurs over an extensive area, consider milling or diamond grinding the entire pavement surface. Concrete or bituminous resurfacing may also be used to correct this condition.

(2) Contaminants. Remove rubber deposits with high-pressure water or biodegradable chemicals.

6-3. TEMPORARY PATCHING OF CONCRETE PAVEMENTS. Broken concrete areas can be patched with bituminous concrete as an interim measure. Full-depth bituminous repairs will interrupt the structural integrity of the rigid pavement and may lead to additional failures. Consequently, such full-depth repairs should be considered

temporary, and corrective long-term repairs should be scheduled. Temporary repair for corner cracks, diagonal cracks, blowups, and spalls can be made using the following procedures:

a. Make a vertical cut with a concrete saw completely through the slab.

b. Break out the concrete with pneumatic tools, and remove broken concrete down to the subbase/subgrade material.

c. Add subbase/subgrade material if required, and compact.

d. Apply a prime coat to the subbase material.

e. Apply a tack coat to the sides of the slab.

f. Place bituminous concrete in layers not exceeding 3 inches (75 mm).

g. Compact each layer with a vibratory-plate compactor, roller, or mechanical rammers.

For partial-depth repairs, make a vertical cut approximately 3 inches (75 mm) deep, apply tack coat, and place bituminous concrete in one layer. Normal traffic may be permitted on bituminous patches immediately after completion of the patch.

6-4. REPAIR METHODS FOR BITUMINOUS CONCRETE PAVEMENTS.

a. Crack Sealing. Cracking takes many forms. In some cases, simple crack filling may be the proper corrective action. Some cracks, however, require complete removal of the cracked area and the installation of drainage.

(1) Longitudinal, Transverse, Reflection, and Block Cracking. Narrow cracks, less than 1/4 inch (6 mm), are too small to seal effectively. In areas where narrow cracks are present, a seal coat, slurry seal, or fog coat may be applied. Narrow cracks can also be widened by sawing or routing. Wide cracks, greater than 1/4 inch (6 mm), should be sealed using the following procedure:

(a) Clean out the crack with compressed air to remove all loose particles. If necessary, rout to widen the crack prior to utilizing compressed air. Also, address any required weed prevention.

(b) Fill cracks with a prepared crack sealer.

(2) Alligator Cracking. Permanent repairs by patching may be carried out as follows:

(a) Remove the surface and base as deep as necessary to reach a firm foundation. In some cases, a portion of the subgrade may also have to be removed. Use a power saw to make vertical square or rectangular cuts through the pavement.

(b) Replace base material with material equal to that removed, but if the base material has proved problematic, replace it with a more appropriate material. Compact each layer placed.

(c) Apply a tack coat to the vertical faces of the existing pavement.

(d) Place bituminous concrete and compact.

(e) If necessary, saw and seal the joints around the perimeter of the patch area.

(3) Slippage Cracks. One repair method commonly used for slippage cracks involves removing the affected area and patching with plant-mixed asphalt material. Specific steps are given below:

(a) Remove the affected area and at least 1 foot (30 cm) into the surrounding pavement. Make the cut faces straight and vertical. A power pavement saw makes a fast and neat cut.

(b) Clean the surface of the exposed underlying layer with brooms and compressed air.

(c) Apply a light tack coat.

(d) Place sufficient hot plant-mixed asphalt material in the cutout area to make the compacted surface the same grade as that of the surrounding pavement.

(e) Compact the asphalt mixture with steel-wheel or rubber-tire rollers until the surface is the same elevation as the surrounding pavement.

b. Disintegration. If not impeded in its early stages, disintegration can progress rapidly until the pavement requires complete rebuilding. Sealer-rejuvenator products can be applied to retard disintegration. The products help reverse the aging process of the surface asphalt. Deterioration from raveling may also be impeded by applying a light fog seal or a slurry seal. The basic procedures for either surface treatment are as follows:

(1) Sweep the surface free of all dirt and loose aggregate material.

(2) Apply the surface treatment.

(3) Close to traffic until the seal has cured.

c. Distortion. Repair techniques for distortion range from leveling the surface by filling with new material to completely removing of the affected area and replacing with new material. Cold milling can be employed prior to overlaying for many of these distresses.

(1) Rutting. The repair procedures are as follows:

(a) Determine the severity of the rutting with a straightedge or stringline. Outline the areas to be corrected on the pavement surface.

(b) Mill or grind down the identified area to provide a vertical face around the edge. The FAA recommends a minimum patch depth of 2 inches (5 cm).

(c) Thoroughly clean the entire area.

(d) Apply a light tack coat of asphalt emulsion to the area to receive asphalt material, including the vertical face of the patch area.

(e) Spread enough dense-graded asphalt concrete in the prepared area to bring it to the original grade when compacted. Deeper patches may require multiply lifts to allow proper compaction of each lift.

(f) Thoroughly compact the asphalt patch material with a roller or vibratory plate compactor.

(2) Corrugation and Shoving. The repair procedure for this type of distress is the same as for patch repair of alligator cracking.

(3) Depressions. The repair procedures are as follows:

(a) Determine the limits of the depression with a straightedge or stringline. Outline the depression on the pavement surface.

(b) Mill or grind down the area to provide a vertical face around the edge. The FAA recommends a minimum patch depth of 2 inches (5 cm).

(c) Thoroughly clean the entire area to be repaired.

(d) Apply a light tack coat of asphalt emulsion to the area to receive asphalt material, including the vertical face of the patch area.

(e) Spread enough bituminous concrete in the depression to bring it to the original grade when compacted. Deeper patches may require multiply lifts to allow proper compaction of each lift.

(f) If the pavement was not ground down, feather the edges of the patch by careful raking and manipulation of the material. However, in raking, take care to avoid segregation of the coarse and fine particles of the mixture. With additional effort, a more suitable and longer-lasting patch can result by vertically grinding the edges down or sawing and using a light jackhammer to create a vertical edge with no feathering and little raking required.

(g) Thoroughly compact the patch with a roller or vibratory-plate compactor.

d. Swelling. The repair procedure is the same as for patch repair of alligator cracking.

e. Loss of Skid Resistance. Treatment for loss of skid resistance includes removal of excess asphalt, resurfacing, grooving to improve surface drainage, and removing of rubber deposits.

(1) Bleeding. A pavement milling or grinding machine may be used to remove the excess asphalt by milling off 1/8 inch to 1/4 inch (3 to 6 mm) of pavement. Repair procedures using hot sand or aggregate are as follows:

(a) Apply slag screenings, sand, or rock screenings to the affected area. Heat the aggregate to at least 300º F (150º C) and spread at the rate of 10 to 15 pounds per square yard (4 to 9 kg per m^2).

(b) Immediately after spreading, roll with a rubber-tired roller.

(c) When the aggregate has cooled, broom off loose particles.

(d) Repeat the process if necessary.

(2) Polished Aggregate. One means of correcting this condition is to cover the surface with an aggregate seal coat. Grooving, milling, or diamond grinding the pavement surface are also useful techniques.

(3) Fuel Spillage. Permanent repairs for areas subjected to continuous fuel spillage consist of removal of the damaged pavement and replacement with Portland cement concrete or bituminous asphalt, and application of a coal-tar emulsion seal coat or other fuel-resistant coating.

(4) Contaminants. Rubber deposits may be removed by use of high-pressure water or biodegradable chemicals.

6-5. ADDITIONAL REPAIR METHODS. The following documents describe repair procedures in greater detail:

MS-16, Asphalt in Pavement Maintenance. Asphalt Institute
Unified Facilities Criteria (UFC) O&M: Asphalt Maintenance and Repair. USCOE, NFEC, AFCESA
Unified Facilities Criteria (UFC) O&M: Concrete Repair. USCOE, NFEC, AFCESA
Unified Facilities Criteria (UFC) O&M: Concrete Crack and Partial-Depth Spall Repair. USCOE, NFEC, AFCESA

The Unified Facilities Criteria manuals can be accessed at **http://www.ccb.org/ufgs/ufgs.htm, http://www.hnd.usace.arym.mil/techinfo/index.htm, http://criteria.navfac.navy.mil/criteria,** or at **http://65.204.17.188/report/doc_ufc.html**. Table 1 summarizes maintenance and repair procedures for rigid and flexible pavements.

TABLE 1. MAINTENANCE AND REPAIR OF PAVEMENT SURFACES.

PROBLEM	PROBABLE CAUSE	REPAIR
Crack and joint sealer missing or not bonded to slabs	Faces of joints (cracks) not clean when filled; incorrect application temperature of sealer; wrong kind of seal material; improper joint width.	Remove old material sealer if extensive areas affected; sandblast joints and cracks; reseal properly.
Random cracking	Uncontrolled shrinkage (improper joint spacing); overstressed slabs; slab support lost; subgrade settlement; bitumen too hard or overheated in mix.	Seal newly formed cracks; replace subbase to establish support; if pavement being overloaded, probably will require overlay.
Surface scaling or breakup	**Rigid Pavement** - Overworked finishing operation; inadequate curing. **Flexible Pavement** - Overheated binder; poor aggregate gradation; insufficient binder; incorrect binder or aggregate; fuel spillage, stripping.	**Rigid Pavement** - Remove and replace panel; resurface with thin bonded concrete; resurface area with a bituminous concrete. **Flexible Pavement** - Apply seal coat; overlay.
Joint (1) faulting or (2) spalling	(1) Variable support for un-bonded slabs; loss of load-transfer capability. (2) Incompressible matter in joint spaces; excessive joint finishing.	(1) Remove problem slab; replace slab (dowel to existing pavement). (2) Clean joint; refill with bituminous-sand mix; reseal.
Pumping	Saturated pavement foundation; lack of subbase.	Prevent entrance of water (correct the drainage problem); pump slurry under slabs to reseal; replace slabs and slab foundation; install drainage.
Surface irregularities (rutting, washboarding, birdbaths, undulations)	**Rigid Pavement** - Poor placing control; broken slabs; poor finishing. **Flexible Pavement** – Non-uniform settlement from inadequate compaction of pavement components or fill; unstable mix (poor aggregate gradation, too rich, etc.); poor laying control.	**Rigid Pavement** - Patch local areas, or overlay if widespread. **Flexible Pavement** - Patch local areas; apply leveling course; roto-mill.
Bleeding of bituminous binder	Too much binder in mix (overly rich mix).	Scrape off excess material; blot with sand. NOTE: Bleeding is usually an indication that other surface deformities (rutting, washboarding, etc.) will occur.
Potholes	Water entering pavement structures; segregation in base course material.	Remove and replace base (and subbase if required); replace surface and seal.
Oxidation of bituminous binder	Lack of timely seal coat; binder overheated in mixing; wrong grade of asphalt for climate.	Apply seal coat; heater planer; resurface.
Map cracking, crazing, alligator cracking	**Rigid Pavement** - Excessive surface finishing; Alkali-Aggregate Reactivity. **Flexible Pavement** - Overload; oxidized binder; underdesigned surface course (too thin).	**Rigid Pavement** - If surface deforms or breaks, resurface, grind. **Flexible Pavement** - Overlay; apply seal coat.
Popouts at joints	Dowel misaligned.	Fill popout hole with bituminous concrete or bituminous sand mix (if recurring, may require replacement of slabs).
Slab blowup	Incompressible material in joints preventing slab from expanding; Alkali-Aggregate Reactivity.	Replace slab in blowup area; clean and reseal joints.
Slipperiness	**Rigid Pavement** - Improper finish (too smooth); improper type of curing membrane; excessive curing membrane; polished aggregate, rubber deposits. **Flexible Pavement** - Overly rich mix; poorly designed mix; polished aggregate; improperly applied seal coat; wrong kind of seal coat; rubber deposits.	**Rigid Pavement** - If finish too smooth, resurfacing required to provide texture; wire broom to remove curing membrane; grooving; remove rubber. **Flexible Pavement** - Apply textured seal coat; grooving; remove rubber.

APPENDIX 1. PAVEMENT MAINTENANCE MANAGEMENT PROGRAM.

An effective pavement maintenance management program specifies the procedures to be followed to assure that proper preventative and remedial pavement maintenance is performed. An airport sponsor may use any format it deems appropriate, but the program must, as a minimum, include the following:

1. Pavement Inventory. The following must be depicted in an appropriate form and level of detail:

a. Location of all runways, taxiways, and aprons
b. Dimensions
c. Type of pavement
d. Year of construction or most recent major rehabilitation
e. Whether Federal financial assistance was used to construct, reconstruct, or repair the pavement.

2. Inspection Schedule.

a. Detailed Inspection. Trained personnel must perform a detailed inspection of airfield pavements at least once a year. If a history of recorded pavement deterioration in the form of a Pavement Condition Index (PCI) survey as set forth in ASTM D5340, *Standard Test Method for Airport Pavement Condition Index Surveys*, is available, the frequency of inspections may be extended to 3 years.

b. Drive-By Inspection. A drive-by inspection must occur a minimum of once per month to detect unexpected changes in the pavement condition.

3. Record Keeping. The airport must record and keep on file for a minimum of 5 years complete information about all detailed inspections and maintenance performed. The types of distress, their locations, and remedial action, scheduled or performed, must be documented. The minimum information to be recorded is listed below:

a. Inspection date
b. Location
c. Distress types
d. Maintenance scheduled or performed

For drive-by inspections, records must include the date of inspection and any maintenance performed.

4. Information Retrieval. An airport sponsor may use any form of record keeping it deems appropriate, so long as the information and records produced by the pavement survey can be retrieved as necessary for any reports required by the FAA.

5. Program Funding. The program should identify funding and other resources available to provide remedial and preventive maintenance activities.

This Page Intentionally Left Blank.

APPENDIX 2. BIBLIOGRAPHY.

1. *Joint and Crack Sealing and Repair for Concrete Pavements*, TB012P, American Concrete Pavement Association, Skokie, IL, 1993.

2. *Diamond Grinding and Concrete Pavement Restoration,* TB008P, American Concrete Pavement Association, Skokie, IL, 2000.

3. *Slab Stabilization Guidelines for Concrete Pavements,* TB018P, American Concrete Pavement Association, Skokie, IL, 1994.

4. *Stitching Concrete Pavement Cracks and Joints,* SR903P, American Concrete Pavement Association, Skokie, IL, 2001.

5. *Guide for Load Transfer Restoration,* JP001P, American Concrete Pavement Association, Skokie, IL, 1998.

6. *The Concrete Pavement Restoration Guide,* TB020P, American Concrete Pavement Association, Skokie, IL, 1998.

7. *Concrete Pavement Repair Manual,* JP002P, American Concrete Pavement Association, Skokie, IL, June, 2003.

8. *Concrete Crack and Partial-Depth Spall Repair Manual,* JP003P, American Concrete Pavement Association, Skokie, IL, 2003.

9. *SHRP H 349 Concrete Pavement Repair Manuals of Practice, Materials and Procedures for the Repair of Joint Seals in Concrete Pavements, Materials and Procedures for Rapid Repair of Partial-Depth Spalls in Concrete Pavements,* Strategic Highway Research Program–National Research Council, Washington, DC, 1993.

10. *SHRP H 348 Asphalt Pavement Repair Manuals of Practice, Materials and Procedures for Sealing and Filling Cracks in Asphalt-Surfaced Pavements, Materials and Procedures for the Repair of Potholes in Asphalt-Surfaced Pavements,* Strategic Highway Research Program–National Research Council, Washington, DC, 1993.

11. *Maintenance of Joints and Cracks in Concrete Pavemen*t, IS188.01P, Portland Cement Association, Skokie, Illinois 60077, 1976.

12. *Asphalt in Pavement Maintenance*, MS-16, Third Edition, The Asphalt Institute, Lexington, KY 40512, 1997.

13. *The Basic Asphalt Emulsion Manual,* MS-19 Third Edition, The Asphalt Institute, Lexington, KY 40512, 1998.

14. *Asphalt Overlays for Highway and Street Rehabilitation,* MS-17, Third Edition, The Asphalt Institute, Lexington, KY 40512, 2000.

15. *Maintenance and Repair of Surface Areas*, TM 5-624, MO-1 02, AFR 85-8, Departments of the Army, Navy, and Air Force, Washington, DC, 1977.

16. *Pavement Rehabilitation Materials and Techniques*, Synthesis of Highway Practice 9, National Cooperative Highway Research Program, Washington, DC, 1972.

17. *Sealing Joints and Cracks, Thin Resurfacing, and Locating Voids Under Concrete Slabs*, Transportation Research Record 752, Transportation Research Board, Washington, DC, 1980.

18. Report No. DOT/FAA/PM-87/8, Micro-PAVER, *Concept and Development, Airport Pavement Management System. 1988*

19. Report No. CEEDO-TR-77-44-VOL-1, *Development of a Pavement Maintenance Management System, Volume I: Maintenance and Repair Guidelines for Airfield Pavements*, Construction Engineering Research Laboratory, Champaign, IL, December 1977.

20. *Report No. CEEDO-TR-77-44-VOL-2, Development of a Pavement Maintenance Management System, Volume II: Airfield Pavement Distress Identification Manual*, Construction Engineering Research Laboratory, Champaign, IL, December 1977.

21. Report No. CEEDO-TR-77-44-VOL-3, *Development of a Pavement Maintenance Management System, Volume III: Maintenance and Repair Guidelines for Airfield Pavements*, Construction Engineering Research Laboratory, Champaign, IL, September 1977.

22. Report No. CEEDO-TR-77-44-VOL-4, *Development of a Pavement Maintenance Management System, Volume IV: Appendices A through I, Maintenance and Repair Guidelines for Airfield Pavements*, Construction Engineering Research Laboratory, Champaign, IL, September 1977.

23. Report No. FAA-RD-75-110-II, *Methodology for Determining, Isolating, and Correcting Runway Roughness,* Civil Engineering Research Facility, University of New Mexico, Albuquerque, NM, June 1977

24. Document No. D6-81746, *Runway Roughness Measurement, Quantification, and Application–The Boeing Method,* Boeing Commercial Airplane Group–Airport Technology Organization, Seattle, Washington, 2002.

25. Report No. FAA-RD-80-55, *Procedures for Condition Survey of Civil Airports*, U.S. Army Engineer Waterways Experimental Station, Vicksburg, MS, May 1980.

26. AC 150/5320-5, *Airport Drainage*, current version.

27. AC 150/5380-7, *Pavement Management System*, current version.

28. AC 150/5370-11, *Use of Nondestructive Testing Devices in the Evaluation of Airport Pavements*, current version.

29. AC 150/5320-12, *Measurement, Construction, and Maintenance of Skid Resistant Airport Pavement Surfaces*, current version.

APPENDIX B

CAUSE OF DISTRESS TABLES

Table B-1. Cause of pavement distress, asphalt-surfaced pavements.

Distress Type	Probable Cause of Distress
Alligator Cracking	Fatigue failure of the asphalt concrete surface under repeated traffic loading
Bleeding	Excessive amounts of asphalt cement or tars in the mix and/or low air void content
Block Cracking	Shrinkage of the asphalt concrete and daily temperature cycling; it is not load associated
Corrugation	Traffic action combined with an unstable pavement layer
Depression	Settlement of the foundation soil or can be "built up" during construction
Jet Blast	Bituminous binder has been burned or carbonized
Joint Reflection	Movement of the concrete slab beneath the asphalt concrete surface because of thermal and moisture changes
Longitudinal and Transverse Cracking	Cracks may be caused by 1) poorly constructed paving lane joint, 2) shrinkage of the AC surface due to low temperatures or hardening of the asphalt, or 3) reflective crack caused by cracks in an underlying PCC[1] slab
Oil Spillage	Deterioration or softening of the pavement surface caused by the spilling of oil, fuel, or other solvents
Patching	N/A
Polished Aggregate	Repeated traffic applications
Raveling and Weathering	Asphalt binder may have hardened significantly
Rutting	Usually caused by consolidation or lateral movement of the materials due to traffic loads
Shoving	Where PCC pavements adjoin flexible pavements, PCC "growth" may shove the asphalt pavement
Slippage Cracking	Low strength surface mix or poor bond between the surface and next layer of pavement structure
Swelling	Usually caused by frost action or by swelling soil

[1]PCC: portland cement concrete

Table B-2. Cause of pavement distress, portland cement concrete pavements.

Distress Type	Probable Cause of Distress
Blow-Up	Incompressibles in joints
Corner Break	Load repetition combined with loss of support and curling stresses
Cracks	Combination of load repetition, curling stresses, and shrinkage stresses
Durability Cracking	Concrete's inability to withstand environmental factors such as freeze-thaw cycles
Joint Seal Damage	Stripping of joint sealant, extrusion of joint sealant, weed growth, hardening of the filler (oxidation, loss of bond to the slab edges, or absence of sealant in joint
Patching (Small and Large)	N/A
Popouts	Freeze-thaw action in combination with expansive aggregates
Pumping	Poor drainage, poor joint sealant
Scaling	Over finishing of concrete, deicing salts, improper construction, freeze-thaw cycles, poor aggregate, and alkali-silica reactivity
Settlement	Upheaval or consolidation
Shattered Slab	Load repetition
Shrinkage	Setting and curing of the concrete
Spalling (Joint and Corner)	Excessive stresses at the joint caused by infiltration of incompressible materials or traffic loads; weak concrete at joint combined with traffic loads

Appendix C

Photographs

R07WV-01. Overview.

T01WV-01. Overview.

T02WV-01. Overview.

T03WV-01. Overview.

T04WV-01. Overview.

T05WV-01. Overview.

T06WV-01. Overview.

A01WV-01. Overview.

A01WV-01. Alligator cracking.

A01WV-02. Overview.

A02WV-01. Overview.

A03WV-01. Overview.

APPENDIX D

RE-INSPECTION REPORT

Re-inspection Report

WA2005
Report Generated Date: 9/26/2006
Site Name:

Network: WATERVILLE Name: WATERVILLE AIRPORT

Branch: A01WV Name: APRON 01 WATERVILLE Use: APRON Area: 17,850.00SqFt

Section: 01 of 2 From: END To: A01WV-02 Last Const.: 9/2/1976
Surface: AC Family: ACENSAPRONNP Zone: NCNT Category: Rank: P
Area: 8,400.00SqFt Length: 120.00Ft Width: 70.00Ft
Shoulder: Street Type: Grade: 0.00 Lanes: 0
Section Comments:

Last Insp. Date6/2/2005 Total Samples: 2 Surveyed: 2
Conditions: PCI:20.00 |
Inspection Comments:

Sample Number: 01 Type: R Area: 3,500.00SqFt PCI = 22
Sample Comments:

48	L & T CR	L	113.03	Ft	Comments:
41	ALLIGATOR CR	M	120.00	SqFt	Comments:
48	L & T CR	M	56.01	Ft	Comments:
53	RUTTING	L	60.00	SqFt	Comments:
45	DEPRESSION	L	350.00	SqFt	Comments:
45	DEPRESSION	M	450.00	SqFt	Comments:
50	PATCHING	M	114.00	SqFt	Comments:

Sample Number: 02 Type: R Area: 4,900.00SqFt PCI = 19
Sample Comments:

48	L & T CR	M	32.01	Ft	Comments:
48	L & T CR	L	69.02	Ft	Comments:
41	ALLIGATOR CR	H	40.00	SqFt	Comments:
50	PATCHING	H	320.00	SqFt	Comments:
41	ALLIGATOR CR	M	440.00	SqFt	Comments:
45	DEPRESSION	M	120.00	SqFt	Comments:
45	DEPRESSION	L	220.00	SqFt	Comments:
52	WEATH/RAVEL	L	999.99	SqFt	Comments:
52	WEATH/RAVEL	M	500.00	SqFt	Comments:
50	PATCHING	M	420.00	SqFt	Comments:
50	PATCHING	L	799.99	SqFt	Comments:

Re-inspection Report

WA2005
Report Generated Date: 9/26/2006
Site Name:

Network: WATERVILLE Name: WATERVILLE AIRPORT

Branch: A01WV Name: APRON 01 WATERVILLE Use: APRON Area: 17,850.00SqFt

Section: 02 of 2 From: A01WV-01 To: T03WV-01 Last Const.: 9/2/1976
Surface: AC Family: STTWAPRONNP Zone: NCNT Category: Rank: P
Area: 9,450.00SqFt Length: 135.00Ft Width: 70.00Ft
Shoulder: Street Type: Grade: 0.00 Lanes: 0
Section Comments:

Last Insp. Date6/2/2005 Total Samples: 3 Surveyed: 3
Conditions: PCI:19.00 |
Inspection Comments:

Sample Number: 01 Type: R Area: 3,500.00SqFt PCI = 17
Sample Comments:

45	DEPRESSION	L	80.00	SqFt	Comments:
52	WEATH/RAVEL	L	1,499.99	SqFt	Comments:
45	DEPRESSION	M	120.00	SqFt	Comments:
52	WEATH/RAVEL	M	1,999.98	SqFt	Comments:
41	ALLIGATOR CR	M	96.00	SqFt	Comments:
50	PATCHING	M	749.99	SqFt	Comments:
48	L & T CR	M	26.01	Ft	Comments:
48	L & T CR	L	32.01	Ft	Comments:

Sample Number: 02 Type: R Area: 3,500.00SqFt PCI = 19
Sample Comments:

52	WEATH/RAVEL	L	1,999.98	SqFt	Comments:
48	L & T CR	L	81.02	Ft	Comments:
52	WEATH/RAVEL	M	1,499.99	SqFt	Comments:
45	DEPRESSION	M	150.00	SqFt	Comments:
45	DEPRESSION	L	120.00	SqFt	Comments:
53	RUTTING	M	100.00	SqFt	Comments:
53	RUTTING	L	100.00	SqFt	Comments:
41	ALLIGATOR CR	M	140.00	SqFt	Comments:

Sample Number: 03 Type: R Area: 2,450.00SqFt PCI = 21
Sample Comments:

48	L & T CR	L	106.03	Ft	Comments:
53	RUTTING	M	150.00	SqFt	Comments:
45	DEPRESSION	M	100.00	SqFt	Comments:
48	L & T CR	M	11.00	Ft	Comments:
45	DEPRESSION	L	100.00	SqFt	Comments:
52	WEATH/RAVEL	L	1,499.99	SqFt	Comments:
52	WEATH/RAVEL	M	1,999.98	SqFt	Comments:

Re-inspection Report

WA2005
Report Generated Date: 9/26/2006
Site Name:

Network: WATERVILLE Name: WATERVILLE AIRPORT

Branch: A02WV Name: APRON 02 WATERVILLE Use: APRON Area: 48,334.00SqFt

---

Section: 01 of 2 From: T02WV To: END Last Const.: 9/2/1997
Surface: AC Family: ACENSAPRONNP Zone: NCNT Category: Rank: P
Area: 34,937.00SqFt Length: 245.00Ft Width: 130.00Ft
Shoulder: Street Type: Grade: 0.00 Lanes: 0
Section Comments:

Last Insp. Date6/2/2005 Total Samples: 7 Surveyed: 4
Conditions: PCI:90.00 |
Inspection Comments:

Sample Number: 02 Type: R Area: 5,000.00SqFt PCI = 96
Sample Comments:

48	L & T CR	L	16.00 Ft	Comments:

Sample Number: 03 Type: R Area: 5,000.00SqFt PCI = 93
Sample Comments:

48	L & T CR	L	91.02 Ft	Comments:

Sample Number: 04 Type: R Area: 5,000.00SqFt PCI = 82
Sample Comments:

48	L & T CR	M	72.04 Ft	Comments:
48	L & T CR	L	41.02 Ft	Comments:

Sample Number: 05 Type: R Area: 5,000.00SqFt PCI = 87
Sample Comments:

48	L & T CR	L	2.00 Ft	Comments:
48	L & T CR	M	41.01 Ft	Comments:

Re-inspection Report

WA2005
Report Generated Date: 9/26/2006
Site Name:

Network: WATERVILLE Name: WATERVILLE AIRPORT

Branch: A02WV Name: APRON 02 WATERVILLE Use: APRON Area: 48,334.00SqFt

---

Section: 02 of 2 From: T02WV To: END Last Const.: 9/3/1998
Surface: AC Family: ACENSAPRONNP Zone: NCNT Category: Rank: P
Area: 13,397.00SqFt Length: 285.00Ft Width: 44.00Ft
Shoulder: Street Type: Grade: 0.00 Lanes: 0
Section Comments:

Last Insp. Date6/2/2005 Total Samples: 2 Surveyed: 2
Conditions: PCI:99.00 |
Inspection Comments:

Sample Number: 01 Type: R Area: 7,017.00SqFt PCI = 100
Sample Comments:
<NO DISTRESSES>

Sample Number: 02 Type: R Area: 6,380.00SqFt PCI = 98
Sample Comments:

48	L & T CR	L	7.00 Ft	Comments:

Re-inspection Report

WA2005
Report Generated Date: 9/26/2006
Site Name:

Network: WATERVILLE Name: WATERVILLE AIRPORT

Branch: A03WV Name: APRON 03 WATERVILLE Use: APRON Area: 4,257.00SqFt

---

Section: 01 of 1 From: END To: R25 END Last Const.: 9/3/1998
Surface: AC Family: ACENSAPRONNP Zone: NCNT Category: Rank: P
Area: 4,257.00SqFt Length: 140.00Ft Width: 40.00Ft
Shoulder: Street Type: Grade: 0.00 Lanes: 0
Section Comments:

Last Insp. Date6/2/2005 Total Samples: 1 Surveyed: 1
Conditions: PCI:95.00 |
Inspection Comments:

Sample Number: 01 Type: R Area: 4,257.00SqFt PCI = 95
Sample Comments:

```
48  L & T CR                                L        33.01 Ft        Comments:
```

Re-inspection Report

WA2005
Report Generated Date: 9/26/2006
Site Name:

Network: WATERVILLE Name: WATERVILLE AIRPORT

Branch: R07WV Name: RUNWAY 07/25 WATERVILLE Use: RUNWAY Area: 149,750.00SqFt

---

Section: 01 of 2 From: R07 END To: R07WV-02 Last Const.: 9/2/1997
Surface: AC Family: ACENSRWNP Zone: NCNT Category: Rank: P
Area: 17,250.00SqFt Length: 345.00Ft Width: 50.00Ft
Shoulder: Street Type: Grade: 0.00 Lanes: 0
Section Comments:

Last Insp. Date6/2/2005 Total Samples: 3 Surveyed: 3
Conditions: PCI:84.00 |
Inspection Comments:

Sample Number: 01 Type: R Area: 5,000.00SqFt PCI = 85
Sample Comments:

48	L & T CR	M	40.01 Ft	Comments:
48	L & T CR	L	82.02 Ft	Comments:

Sample Number: 02 Type: R Area: 6,250.00SqFt PCI = 86
Sample Comments:

48	L & T CR	L	292.07 Ft	Comments:

Sample Number: 03 Type: R Area: 6,250.00SqFt PCI = 80
Sample Comments:

48	L & T CR	M	37.01 Ft	Comments:
48	L & T CR	L	313.08 Ft	Comments:

Re-inspection Report

WA2005
Report Generated Date: 9/26/2006
Site Name:

Network: WATERVILLE Name: WATERVILLE AIRPORT

Branch: R07WV Name: RUNWAY 07/25 WATERVILLE Use: RUNWAY Area: 149,750.00SqFt

---

Section: 02 of 2 From: R07WV-01 To: R25 END Last Const.: 9/2/1997
Surface: AC Family: ACENSRWNP Zone: NCNT Category: Rank: P
Area: 132,500.00SqFt Length: 2,650.00Ft Width: 50.00Ft
Shoulder: Street Type: Grade: 0.00 Lanes: 0
Section Comments:

Last Insp. Date6/2/2005 Total Samples: 27 Surveyed: 5
Conditions: PCI:83.00 |
Inspection Comments:

Sample Number: 02 Type: R Area: 5,000.00SqFt PCI = 86
Sample Comments:

48	L & T CR	L	243.06 Ft	Comments:

Sample Number: 08 Type: R Area: 5,000.00SqFt PCI = 89
Sample Comments:

48	L & T CR	L	173.04 Ft	Comments:

Sample Number: 14 Type: R Area: 5,000.00SqFt PCI = 81
Sample Comments:

48	L & T CR	L	176.05 Ft	Comments:
52	WEATH/RAVEL	L	40.00 SqFt	Comments:
48	L & T CR	M	20.01 Ft	Comments:

Sample Number: 20 Type: R Area: 5,000.00SqFt PCI = 81
Sample Comments:

48	L & T CR	L	348.09 Ft	Comments:

Sample Number: 26 Type: R Area: 3,750.00SqFt PCI = 75
Sample Comments:

48	L & T CR	L	75.02 Ft	Comments:
50	PATCHING	L	749.99 SqFt	Comments:

Re-inspection Report

WA2005
Report Generated Date: 9/26/2006
Site Name:

Network: WATERVILLE Name: WATERVILLE AIRPORT

Branch: T01WV Name: TAXIWAY 01 WATERVILLE Use: TAXIWAY Area: 4,485.00SqFt

Section: 01 of 1 From: A01WV-01 To: R07 END Last Const.: 9/1/1998
Surface: AC Family: ACNCTWNP Zone: NCNT Category: Rank: P
Area: 4,485.00SqFt Length: 105.00Ft Width: 35.00Ft
Shoulder: Street Type: Grade: 0.00 Lanes: 0
Section Comments:

Last Insp. Date6/2/2005 Total Samples: 1 Surveyed: 1
Conditions: PCI:20.00 |
Inspection Comments:

Sample Number: 01 Type: R Area: 4,479.00SqFt PCI = 20
Sample Comments:

50	PATCHING	L	1,949.98	SqFt	Comments:
48	L & T CR	M	103.03	Ft	Comments:
41	ALLIGATOR CR	H	24.00	SqFt	Comments:
41	ALLIGATOR CR	M	84.00	SqFt	Comments:
48	L & T CR	L	31.01	Ft	Comments:
50	PATCHING	H	432.00	SqFt	Comments:
50	PATCHING	M	222.00	SqFt	Comments:
45	DEPRESSION	M	60.00	SqFt	Comments:
45	DEPRESSION	L	72.00	SqFt	Comments:
52	WEATH/RAVEL	M	110.00	SqFt	Comments:
52	WEATH/RAVEL	L	120.00	SqFt	Comments:

Re-inspection Report

WA2005
Report Generated Date: 9/26/2006
Site Name:

Network: WATERVILLE Name: WATERVILLE AIRPORT

Branch: T02WV Name: TAXIWAY 02 WATERVILLE Use: TAXIWAY Area: 11,347.00SqFt

---

Section: 01 of 1 From: R07WV-02 To: END Last Const.: 9/3/1997
Surface: AC Family: ACNCTWNP Zone: NCNT Category: Rank: P
Area: 11,347.00SqFt Length: 533.00Ft Width: 20.00Ft
Shoulder: Street Type: Grade: 0.00 Lanes: 0
Section Comments:

Last Insp. Date6/2/2005 Total Samples: 2 Surveyed: 2
Conditions: PCI:100.00 |
Inspection Comments:

Sample Number: 01 Type: R Area: 6,687.00SqFt PCI = 100
Sample Comments:

```
45  DEPRESSION                                L        8.00 SqFt     Comments:
```

Sample Number: 02 Type: R Area: 4,660.00SqFt PCI = 100
Sample Comments:

```
<NO DISTRESSES>
```

Re-inspection Report

WA2005
Report Generated Date: 9/26/2006
Site Name:

Network: WATERVILLE Name: WATERVILLE AIRPORT

Branch: T03WV Name: TAXIWAY 03 WATERVILLE Use: TAXIWAY Area: 7,442.00SqFt

Section: 01 of 2 From: A01WV-02 To: T03WV-02 Last Const.: 9/2/1976
Surface: AC Family: STTWAPRONNP Zone: NCNT Category: Rank: P
Area: 4,693.00SqFt Length: 225.00Ft Width: 20.00Ft
Shoulder: Street Type: Grade: 0.00 Lanes: 0
Section Comments: Alligator cracking on edges may

Last Insp. Date6/2/2005 Total Samples: 1 Surveyed: 1
Conditions: PCI:21.00 |
Inspection Comments:

Sample Number: 01 Type: R Area: 4,693.00SqFt PCI = 21
Sample Comments:

52	WEATH/RAVEL	M	1,999.98	SqFt	Comments:
52	WEATH/RAVEL	L	2,499.98	SqFt	Comments:
41	ALLIGATOR CR	M	550.00	SqFt	Comments:edge
45	DEPRESSION	M	120.00	SqFt	Comments:
45	DEPRESSION	L	120.00	SqFt	Comments:
52	WEATH/RAVEL	H	20.00	SqFt	Comments:
48	L & T CR	L	36.01	Ft	Comments:

Re-inspection Report

WA2005
Report Generated Date: 9/26/2006
Site Name:

Network: WATERVILLE Name: WATERVILLE AIRPORT

Branch: T03WV Name: TAXIWAY 03 WATERVILLE Use: TAXIWAY Area: 7,442.00SqFt

---

Section: 02 of 2 From: T03WV-01 To: T02WV Last Const.: 9/3/1997
Surface: AC Family: ACNCTWNP Zone: NCNT Category: Rank: P
Area: 2,749.00SqFt Length: 120.00Ft Width: 20.00Ft
Shoulder: Street Type: Grade: 0.00 Lanes: 0
Section Comments:

Last Insp. Date6/2/2005 Total Samples: 1 Surveyed: 1
Conditions: PCI:52.00 |
Inspection Comments:

Sample Number: 01 Type: R Area: 2,749.00SqFt PCI = 52
Sample Comments:

41	ALLIGATOR CR	M	26.00	SqFt	Comments:edge
41	ALLIGATOR CR	H	16.00	SqFt	Comments:edge
50	PATCHING	L	250.00	SqFt	Comments:
52	WEATH/RAVEL	L	50.00	SqFt	Comments:

Re-inspection Report

WA2005
Report Generated Date: 9/26/2006
Site Name:

Network: WATERVILLE Name: WATERVILLE AIRPORT

Branch: T04WV Name: TAXIWAY 04 WATERVILLE Use: TAXIWAY Area: 2,488.00SqFt

---

Section: 01 of 1 From: END To: T02WV Last Const.: 9/3/1997
Surface: AC Family: ACNCTWNP Zone: NCNT Category: Rank: T
Area: 2,488.00SqFt Length: 100.00Ft Width: 20.00Ft
Shoulder: Street Type: Grade: 0.00 Lanes: 0
Section Comments:

Last Insp. Date6/2/2005 Total Samples: 1 Surveyed: 1
Conditions: PCI:84.00 |
Inspection Comments:

Sample Number: 01 Type: R Area: 2,488.00SqFt PCI = 84
Sample Comments:

```
50  PATCHING                                L      300.00 SqFt     Comments:utility cut
```

Re-inspection Report

WA2005
Report Generated Date: 9/26/2006
Site Name:

Network: WATERVILLE Name: WATERVILLE AIRPORT

Branch: T05WV Name: TAXIWAY 05 WATERVILLE Use: TAXIWAY Area: 2,440.00SqFt

---

Section: 01 of 1 From: END To: T02WV Last Const.: 9/3/1997
Surface: AC Family: ACNCTWNP Zone: NCNT Category: Rank: T
Area: 2,440.00SqFt Length: 100.00Ft Width: 20.00Ft
Shoulder: Street Type: Grade: 0.00 Lanes: 0
Section Comments:

Last Insp. Date6/2/2005 Total Samples: 1 Surveyed: 1
Conditions: PCI:85.00 |
Inspection Comments:

Sample Number: 01 Type: R Area: 2,440.00SqFt PCI = 85
Sample Comments:

```
50  PATCHING                                L      275.00 SqFt     Comments:utility cut
```

Re-inspection Report

WA2005
Report Generated Date: 9/26/2006
Site Name:

Network: WATERVILLE Name: WATERVILLE AIRPORT

Branch: T06WV Name: TAXIWAY 06 WATERVILLE Use: TAXIWAY Area: 6,141.00SqFt

---

Section: 01 of 1 From: T02WV To: END Last Const.: 9/3/1998
Surface: AC Family: ACNCTWNP Zone: NCNT Category: Rank: T
Area: 6,141.00SqFt Length: 295.00Ft Width: 20.00Ft
Shoulder: Street Type: Grade: 0.00 Lanes: 0
Section Comments:

Last Insp. Date6/2/2005 Total Samples: 1 Surveyed: 1
Conditions: PCI:95.00 |
Inspection Comments:

Sample Number: 01 Type: R Area: 6,141.00SqFt PCI = 95
Sample Comments:

```
50  PATCHING                                L      100.00 SqFt     Comments:utility cut
```

APPENDIX E

MAINTENANCE POLICIES AND UNIT COST TABLES

Table E-1. Localized preventive maintenance policy, AC pavements.

Distress Type	Severity Level	Maintenance Action
Alligator Cracking	Low	Monitor
	Medium	AC Patch-Deep
	High	AC Patch-Deep
Bleeding	N/A	Monitor
Block Cracking	Low	Monitor
	Medium	Crack Seal-AC
	High	Crack Seal-AC
Corrugation	Low	Monitor
	Medium	Monitor
	High	AC Patch-Deep
Depression	Low	Monitor
	Medium	Monitor
	High	AC Patch-Deep
Jet Blast	N/A	AC Patch-Shallow
Joint Reflection Cracking	Low	Monitor
	Medium	Crack Seal-AC
	High	Crack Seal-AC
Longitudinal and Transverse Cracking	Low	Monitor
	Medium	Crack Seal-AC
	High	Crack Seal-AC
Oil Spillage	N/A	AC Patch-Shallow
Patching	Low	Monitor
	Medium	Monitor
	High	AC Patch-Deep
Polished Aggregate	N/A	Monitor
Raveling and Weathering	Low	Monitor
	Medium	Monitor
	High	AC Patch-Shallow
Rutting	Low	Monitor
	Medium	Monitor
	High	AC Patch-Deep
Shoving	Low	Monitor
	Medium	AC Patch-Deep
	High	AC Patch-Deep
Slippage Cracking	N/A	AC Patch-Deep
Swelling	Low	Monitor
	Medium	Monitor
	High	AC Patch-Deep

Table E-2. Localized preventive maintenance policy, PCC pavements.

Distress Type	Severity Level	Maintenance Action
Blow-Up	Low	Slab Replacement
	Medium	Slab Replacement
	High	Slab Replacement
Corner Break	Low	Monitor
	Medium	Crack Seal-PCC
	High	Full Depth PCC Patch
Cracks	Low	Monitor
	Medium	Crack Seal-PCC
	High	Slab Replacement
Durability Cracking	Low	Monitor
	Medium	Full Depth PCC Patch
	High	Slab Replacement
Joint Seal Damage	Low	Monitor
	Medium	Joint Seal-Bituminous
	High	Joint Seal-Bituminous
Patching - Small	Low	Monitor
	Medium	Monitor
	High	Full Depth PCC Patch
Patching - Large	Low	Monitor
	Medium	Monitor
	High	Full Depth PCC Patch
Popouts	N/A	Monitor
Pumping	N/A	Monitor
Scaling	Low	Monitor
	Medium	Slab Replacement
	High	Slab Replacement
Settlement	Low	Monitor
	Medium	Monitor
	High	Slab Replacement
Shattered Slab	Low	Monitor
	Medium	Slab Replacement
	High	Slab Replacement
Shrinkage Cracking	N/A	Monitor
Spalling (Joint and Corner)	Low	Monitor
	Medium	Partial Depth PCC Patch
	High	Partial Depth PCC Patch

Table E-3. Unit costs for preventive maintenance actions.

Maintenance Action	Unit Cost
AC Deep Patch – AC Pavement	$7.00/sf
AC Partial Patch – AC Pavement	$3.70/sf
Crack Sealing – AC Pavement	$7.00/lf
Fog Seal – AC Pavement	$0.20/sf
Slurry Seal – AC Pavement	$1.20/sf
Slab Replacement – PCC Pavement	$16.80/sf
PCC Patch – Full Depth	$15.90/sf
PCC Patch –Partial depth	$18.90/sf
Crack Sealing – PCC Pavement	$7.00/lf
Joint Resealing (Bituminous) – PCC Pavement	$7.00/lf

Table E-4. Unit costs based on PCI values.

Pavement Type	PCI Values										
	0	10	20	30	40	50	60	70	80	90	100
AC	$5.70	$5.70	$5.70	$5.70	$5.70	$2.90	$2.90	$2.90	$0.00	$0.00	$0.00
PCC	$8.90	$8.90	$8.90	$8.90	$8.90	$2.90	$2.90	$0.00	$0.00	$0.00	$0.00

APPENDIX F

YEAR 2006 LOCALIZED MAINTENANCE DETAILS

Table F-1. Waterville Airport Year 2006 localized maintenance details.

Branch[1]	Section	Distress Type	Severity	Distress Quantity	Unit	Maintenance Action	Estimated Cost
A02WV	01	Longitudinal and transverse cracking	Medium	198	LF	Crack Sealing - AC	$1,424
R07WV	01	Longitudinal and transverse cracking	Medium	76	LF	Crack Sealing - AC	$547
	02	Longitudinal and transverse cracking	Medium	112	LF	Crack Sealing - AC	$805

[1]See Figure 3 for the location of the branch and section