ALASKAN WAY VIADUCT

ADDITIONAL RETROFIT FOR GRAY'S MODIFIED PROPOSAL

Prepared for the

Washington State Department of Transportation

By

T.Y. Lin International

November 13, 2006

T·Y·LIN INTERNATIONAL

INTRODUCTION

Victor Gray et al. have proposed retrofitting the Alaskan Way Viaduct by shoring the structure with auxiliary structural steel frames and dampers. Gray's proposals include an original retrofit concept from December 2004 and a modified proposal from 2006. At the request of the Washington State Department of Transportation (WSDOT), T.Y. Lin International performed an independent evaluation of both proposals [1].

Our analysis of Gray's proposals indicated that they would not be completely effective in mitigating the structural deficiencies of the viaduct and that additional retrofit would be required beyond that shown by Gray. At the request of the WSDOT we have performed further analysis to determine the character of additional retrofit measures that would be needed for a satisfactory retrofit of the viaduct. This report summarizes our findings.

Gray's Proposal

The starting point for this study was Gray's modified proposal from 2006. Our initial evaluation of this proposal was included in Appendix C to our first report [1]. Our initial evaluation and this further study were complicated by the fact that Gray's proposal is not well defined. The sketches made available to us are attached to this report as Appendix A. Some sketches show retrofit with buckling-restrained braces while other sketches show retrofit with structural steel braces and fluid viscous dampers. Some sketches show retrofit of the columns with steel jackets while other sketches shown retrofit with fiber wrap.

For this study we have assumed retrofit with structural steel braces and fluid viscous dampers, and fiber wrap of the columns. It's likely that our recommendations for additional retrofit would be the same if we had started from Gray's later concepts. Bridge demands are similar among the variants of Gray's work, and our own concepts are themselves conceptual. Due to the limits of time and lack of clarity of specific proposals, we have not performed sufficient analysis or design to define the necessary additional retrofit measures beyond the conceptual level.

For this study, we have assumed Gray's retrofit proposal to include the following:

- Fiber wrap of all columns, both upper and lower levels.
- Longitudinal structural steel frames between the middle bents of each unit of the viaduct, consisting of horizontal, vertical and bracing members. The bracing members are connected to the horizontal members through dampers, as shown in the retrofit sketches included in Appendix B. Gray's proposals do not indicate the sizes of the members or the dampers; the sizes shown in the appendix were determined by us, by iterative analysis.
- Transverse structural steel braces at the middle bents of each unit, connected to the lower floorbeams through dampers. Similarly to the longitudinal frames, the sizes of the members and dampers were determined by us.
- Longitudinal and transverse grade beams connecting the footings of the middle bents.
- Some level of cement jet grouting of soils underneath the viaduct.

PREVIOUS WORK

In our previous work, we concluded that Gray's modified proposal would not fully eliminate the vulnerabilities of the viaduct (see Appendix C in reference [1]). Our estimate of the likely damage to the viaduct during various earthquakes is shown in Table 1 (from Table 14 in reference [1]) (the values 108, 500, and 2500 are the return periods of the various events).

Table 1, Damage Summary

Element	Earthquake Event		
	Expected (108)	**Design (500)**	**Rare (2500)**
Columns	Cracking	Repairable	*Failure*
Floorbeams	Cracking	Repairable	Significant
Joints	Cracking	Repairable	Significant
Piles	*Moderate*	*Significant*	*Severe*
Footings	*Significant*	*Severe*	*Severe*
Criteria	Minimal	Repairable	Significant

The estimated damage to the viaduct differs depending upon the severity of the earthquake considered, but in each case it exceeds an acceptable level of damage. It should be noted that our actual analysis was of Gray's original proposal, and not his modified proposal. We expect the performance of the two proposals to be similar, however. The longitudinal edge girders and upper knee joints may be an exception to this. It's possible that the modified proposal causes increased demands on the edge girders and knee joints, which could be critical for the SED designed portion of the viaduct.

The most egregious remaining vulnerability of the viaduct is of the foundations. For the design level event, we calculated a demand/capacity ratio of 3.7 for vertical loads on the piles and 2.0 for lateral loads on the foundations. For the footing themselves, the demand/capacity ratio for beam shear was 3.6; the demand/capacity ratio for flexure was 2.0. Based on splitting strength, the demand/capacity ratio for anchorage of the column reinforcing bars was 1.3. The peak principal tensile stress induced in the column/footing joints was estimated to be $4.6\sqrt{f_c^{'}}$ (psi units), which is indicative of damage.

CURRENT WORK

Analysis

Because our previous evaluation showed that extensive foundation retrofit would be required, we modified our ADINA model of the bridge by adding additional piles at each footing. The modified model is shown in Figure 1. As mentioned, the model is of Gray's original proposal; neither time nor the clarity of the subsequent proposals warranted updating the model to reflect Gray's modified proposal. We believe that our conclusions would be the same for an updated model.

The model includes twelve additional piles at each footing of each middle bent and fourteen additional piles at each combined footing of each end bent. (Other footing arrangements along the viaduct may vary – see noted on drawings.) The piles were assumed to be 21 inch diameter concrete filled steel pipe piles. The assumed pile patterns are shown on Sheet 1/3 in Appendix B. It would be necessary to enlarge the footings in order to connect the new piles to the structure and this retrofit is also shown in Appendix B. The existing piles are not connected to the footing,

which allows the structure to rock. The new piles must be connected into the enlarged composite footing in order to eliminate this problem.

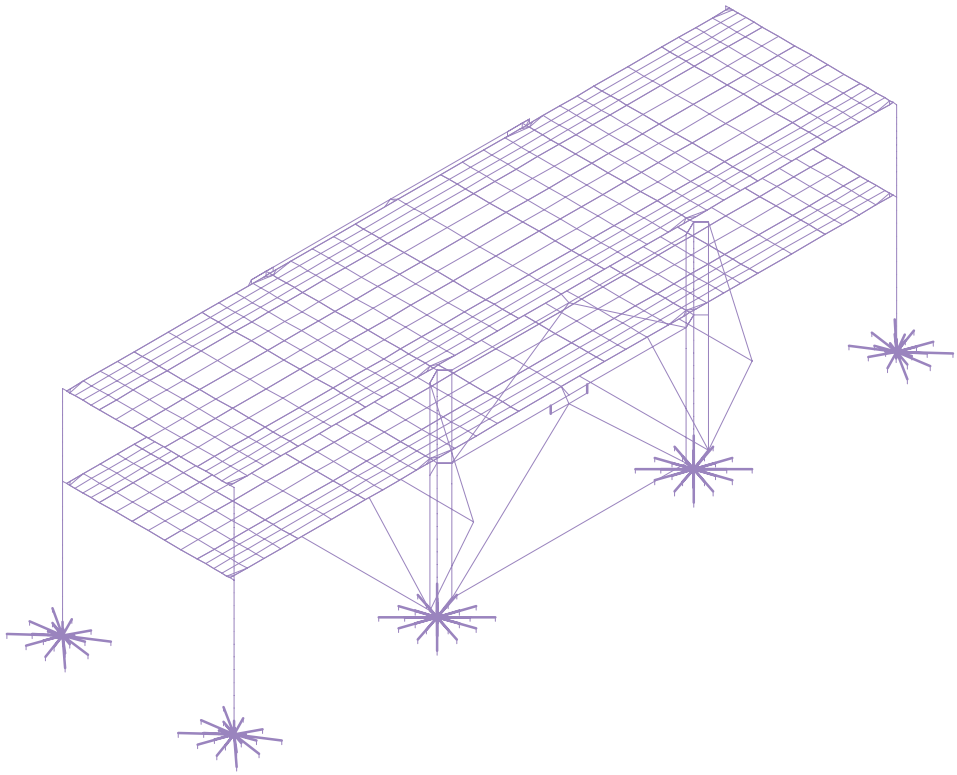

Figure 1, ADINA Model with Added Piles

The model was analyzed for a suite of ground motions corresponding to the design level (500 year) event. The expected and rare events were not considered. The ground motions used were those used in our previous work (see reference [1]).

Additional Retrofit

In addition to those retrofit measures recommended by Gray, we concluded that the footings of the viaduct require retrofit. Our conceptual retrofit consists of added piles and enlargement of the footings, as described above and as shown on Sheet 1/3 in Appendix B. These piles may require drilling instead of conventional driving, both due to the lack of headroom and to protect adjacent foundations. From our analysis, we find that the loads on the existing piles are reduced to about 140 kips in the design event, which may be satisfactory[1]. The computed peak force in the new piles was about 275 kips, which is reasonable for the assumed size of pile. For computing quantities, the new piles may be assumed to be tipped into the glacial till underlying the site.

The sizes of the new footings are shown on Sheets 1 and 3/3 for typical conditions. Footing sizes for non-typical foundations may be determined by extrapolation from the conditions shown. For

[1] As discussed in Reference [1], the existing piles were taken to have a nominal capacity of 60 tons, based on very limited information.

computing quantities, a reinforcing ratio of 275 lb/cy may be assumed, recognizing that reinforcing must be dowelled into the old footing in order to achieve composite behavior.

Another identified concern, not addressed by Gray's retrofit proposals, is the poor anchorage of the bottom bars of the lower floorbeams at the columns. Anchorage failure of the bars is not acceptable. We recommend improving the connection of the lower floorbeams to the columns by installing high-strength rods into holes cored through the columns and into the floorbeams, as shown on Sheet 2/3 in Appendix B. If the bars are prestressed, they will also significantly improve the behavior of the tee joints between the columns and floorbeams by inducing horizontal compressive stresses in the joints. This will reduce the peak tensile stresses in the joints during an earthquake and reducing cracking and degradation of the strength of the joints.

We also recommend replacement of the knee joints between the columns and the upper floorbeams. Although the calculated stresses in Bents 151-154 (the unit analyzed and shown in Figure 1) are not extreme, by reference to our 2001 work on the damage to Bent 100 it is likely that the stresses in other, less regular, units would be higher. As a matter of expediency in reviewing the Gray proposal, we analyzed a straight unit; curved or otherwise irregular units may be more vulnerable than the unit analyzed[2]. The knee joints of the SED designed portion of the viaduct are especially vulnerable. In those joints, the top floorbeam bars are bent down into the columns and lap welded to the vertical column bars. During the Nisqually earthquake the upper, east knee joint of Bent 100 was badly cracked and spalled and the reinforcement within the joint was exposed. Some of the reinforcement was fractured.

Replacement of the joints is the most reliable means to retrofit them effectively. Jacketing of the joints is problematic since one-half of the joints belong to end bents where one major face is inaccessible. Our retrofit concept is shown on Sheet 2/3 in Appendix B. Temporary support of the floorbeams would be required in order to remove the existing joint. The existing column and floorbeam reinforcement should be maintained so as to splice it into the new joints with mechanical couplers (note that these will be custom couplers, since some of the reinforcing is square), as shown in the detail. New horizontal and vertical joint reinforcement would properly confine the new joint. We propose to extend the floorbeam reinforcement into a new concrete blister extending beyond the existing column face, in order to minimize congestion of the joint. For estimating, a reinforcing ratio of 375 lb/cy may be assumed.

SUMMARY

In aggregate, the retrofit measures proposed by both Gray and ourselves are:

- Fiber wrap of all columns, both upper and lower levels.
- Longitudinal structural steel frames between the middle bents of each unit of the viaduct, consisting of horizontal, vertical and bracing members. The bracing members are connected to the horizontal members through dampers, as shown in the retrofit sketches included in Appendix B. Gray's proposals do not indicate the sizes of the members or the dampers; the sizes shown in the appendix were determined by us, by iterative analysis.

---

[2] This is borne out by the response of the structure during the Nisqually earthquake, where the greatest damage was to the curved unit comprising Bents 97-100, near S. Washington Street.

- Transverse structural steel braces at the middle bents of each unit, connected to the lower floorbeams through dampers. Similarly to the longitudinal frames, the sizes of the members and dampers were determined by us.

- Longitudinal and transverse grade beams connecting the footings of the middle bents.

- Cement jet grouting of soils underneath the viaduct.

- Addition of new piles at each footing.

- Enlargement of each footing to engage the new piles.

- Strengthening of the lower floorbeam/column tee joints.

- Replacement of the upper floorbeam/column knee joints.

These retrofit concept are conceptual, and details will vary along the length of the Viaduct. They are based on limited analysis of Gray's original retrofit proposal, with the addition of joint repairs, new piles and footings. The exact retrofit proposal outlined in the preceding list has not been re-analyzed. Nevertheless, the proposal should suffice for estimating the order of magnitude costs for retrofit of straight, regular portions of the viaduct. The premium costs for logistics related to foundation and joint construction should be considered in an estimate, which limit the applicability of normal quantity-based unit cost estimates. Sufficient contingency should be considered to cover the inevitably greater costs of retrofit of curved or otherwise irregular units.

REFERENCES

1. T.Y. Lin International, Evaluation of Gray's Retrofit Proposal, July 31, 2006.

APPENDIX A

MODIFIED PROPOSAL BY VICTOR GRAY ET AL.

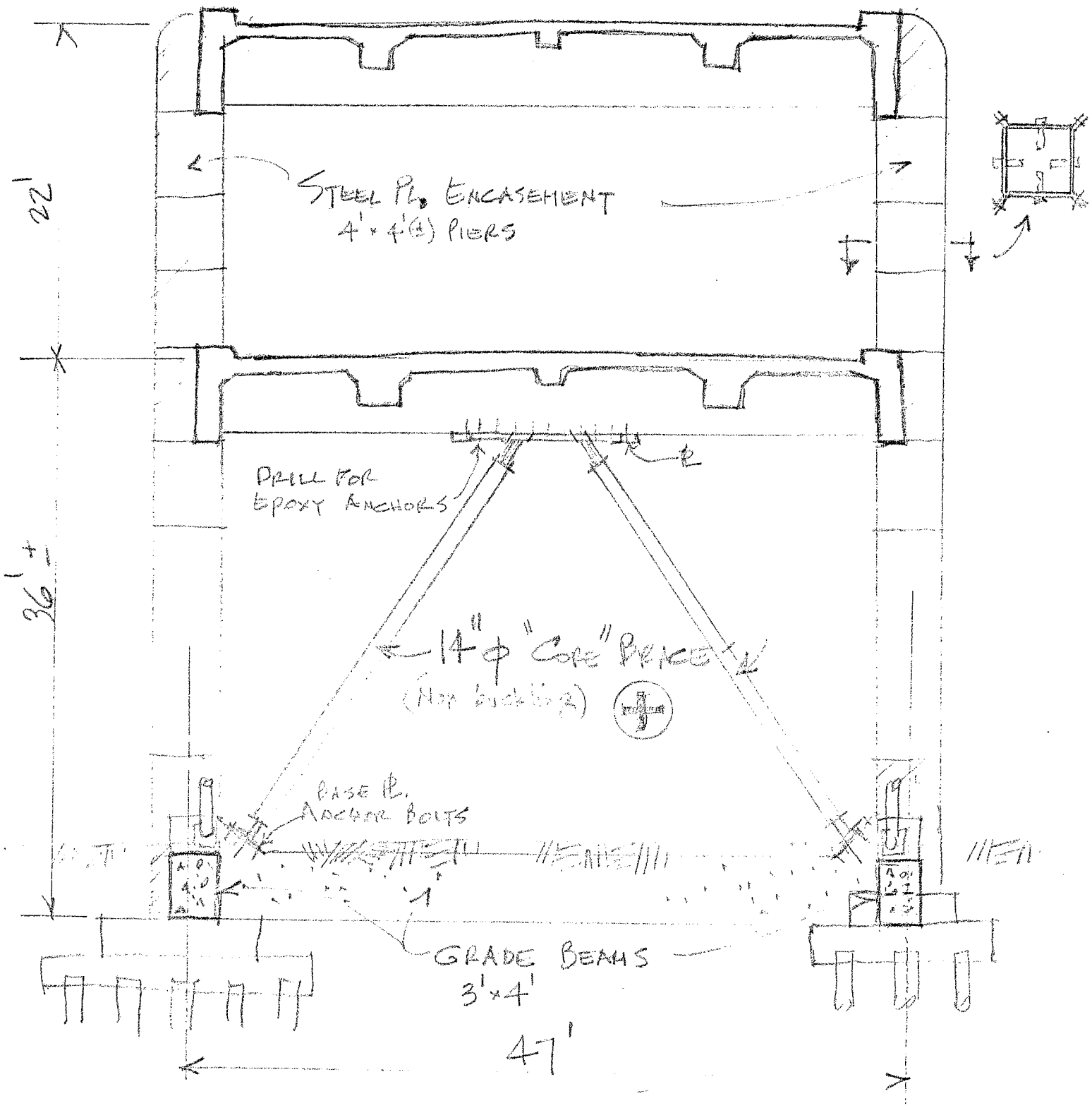

TYPICAL CROSS SECTION X

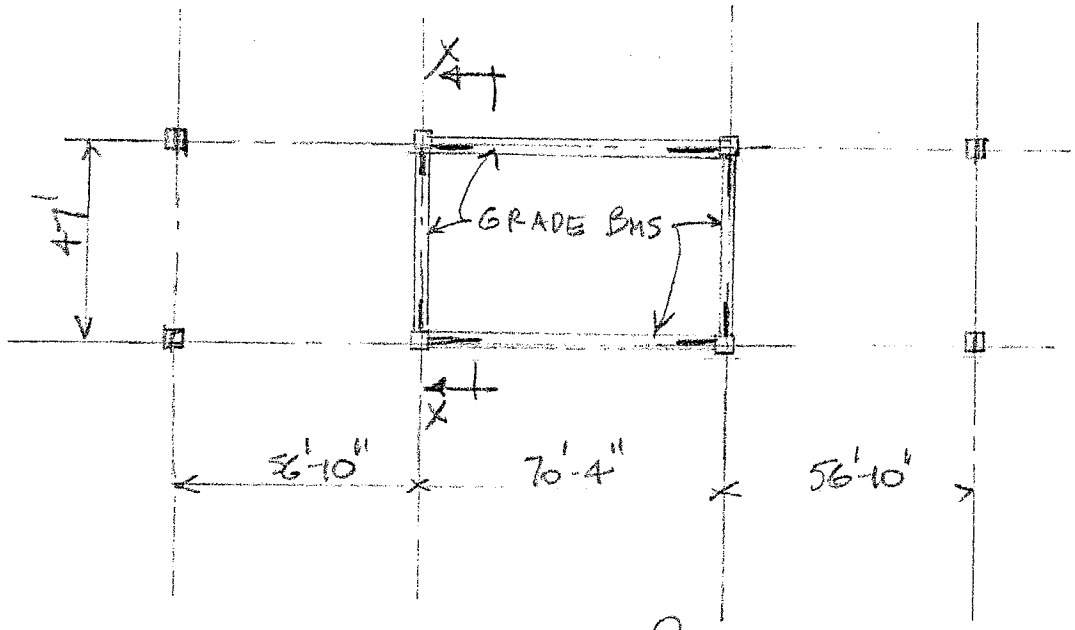

GROUND PLAN

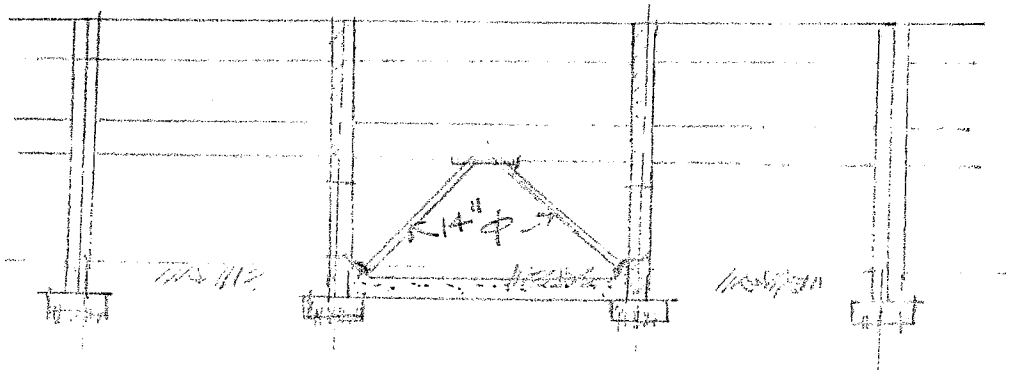

TYPICAL ELEVATION

Job. No.	VICTOR O. GRAY & COMPANY CONSULTING ENGINEERS SEATTLE. WASH.	Client	Sheet
By ____ Date ____		Project	
Chk. ____ Date ____		Subject	

ALASKAN WAY VIADUCT

ELEVATION - 3 SPAN UNIT

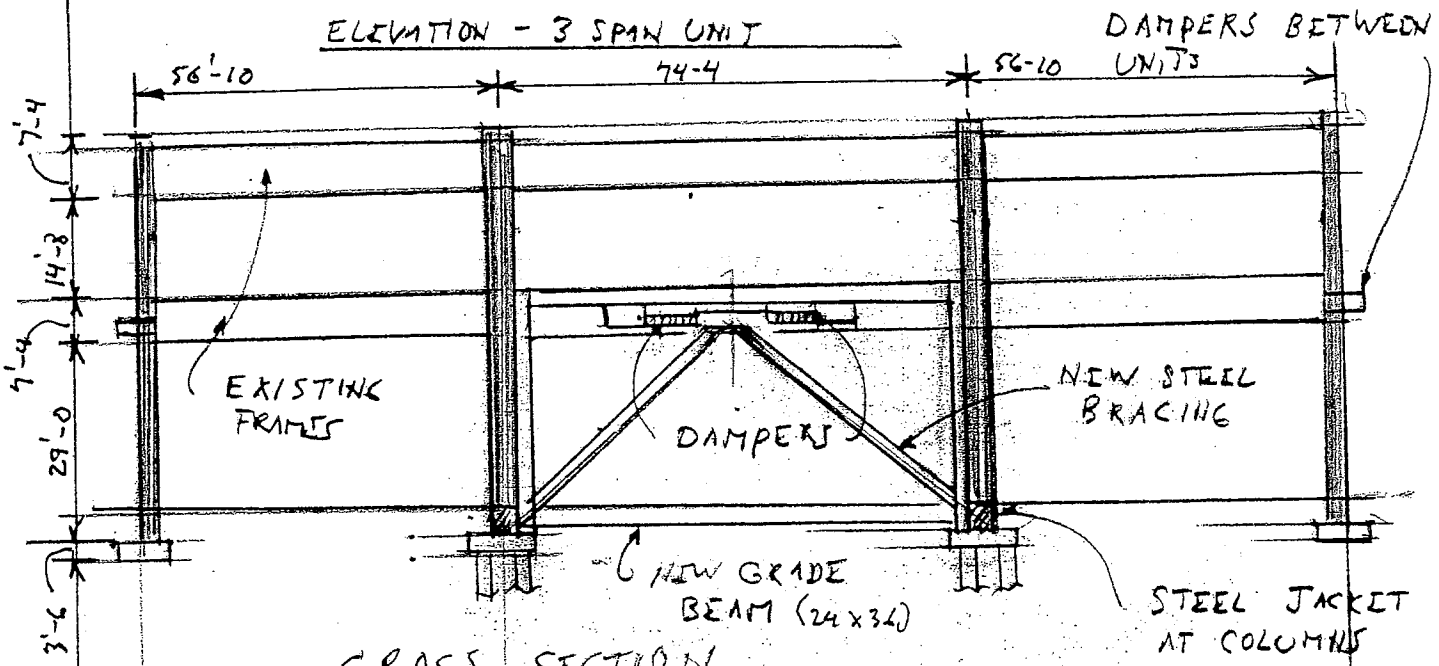

CROSS SECTION

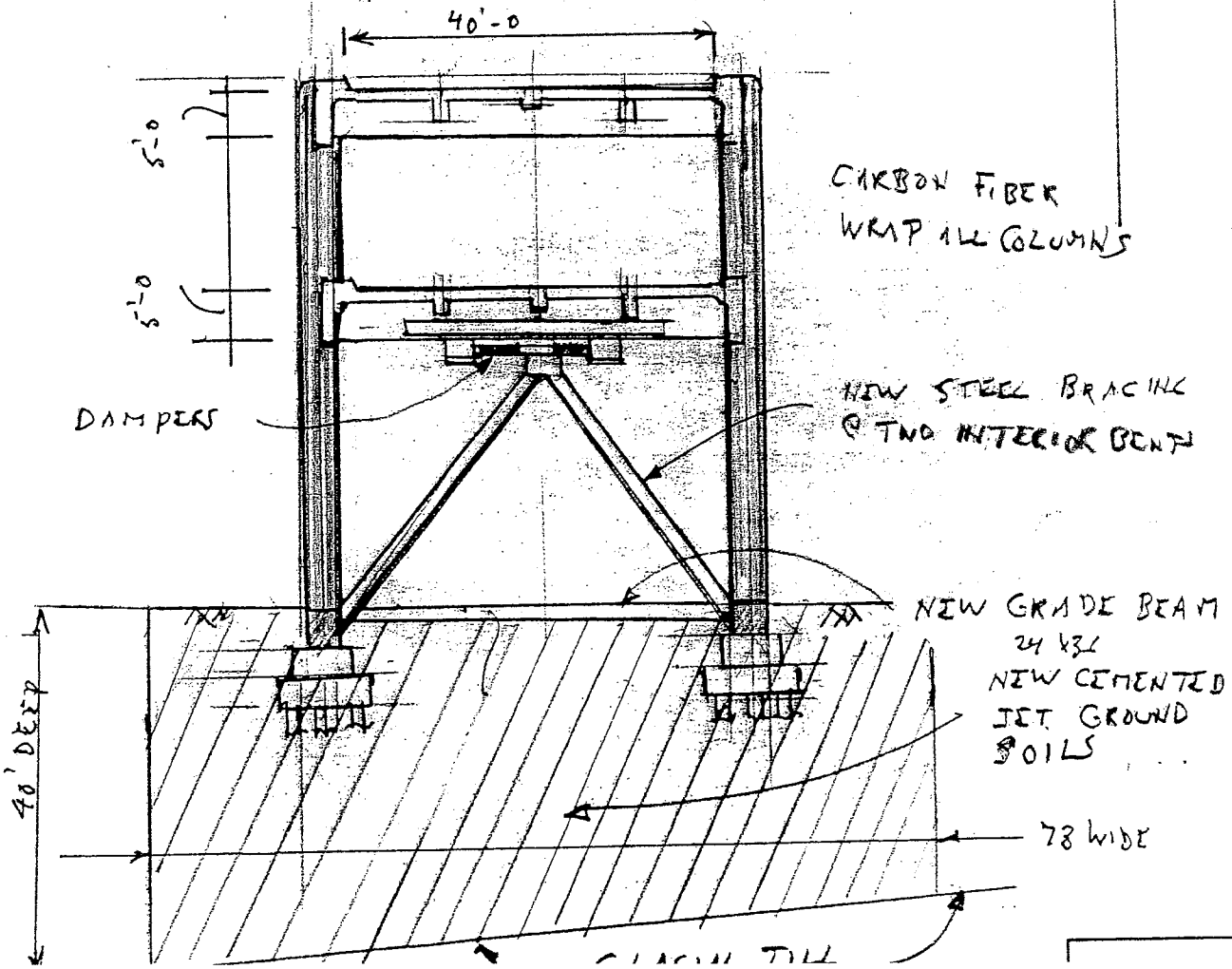

ALASKAN WAY VIADUCT

SECTION @ RELIEVING PLATFORM (NEAR SENECA) BENT 75

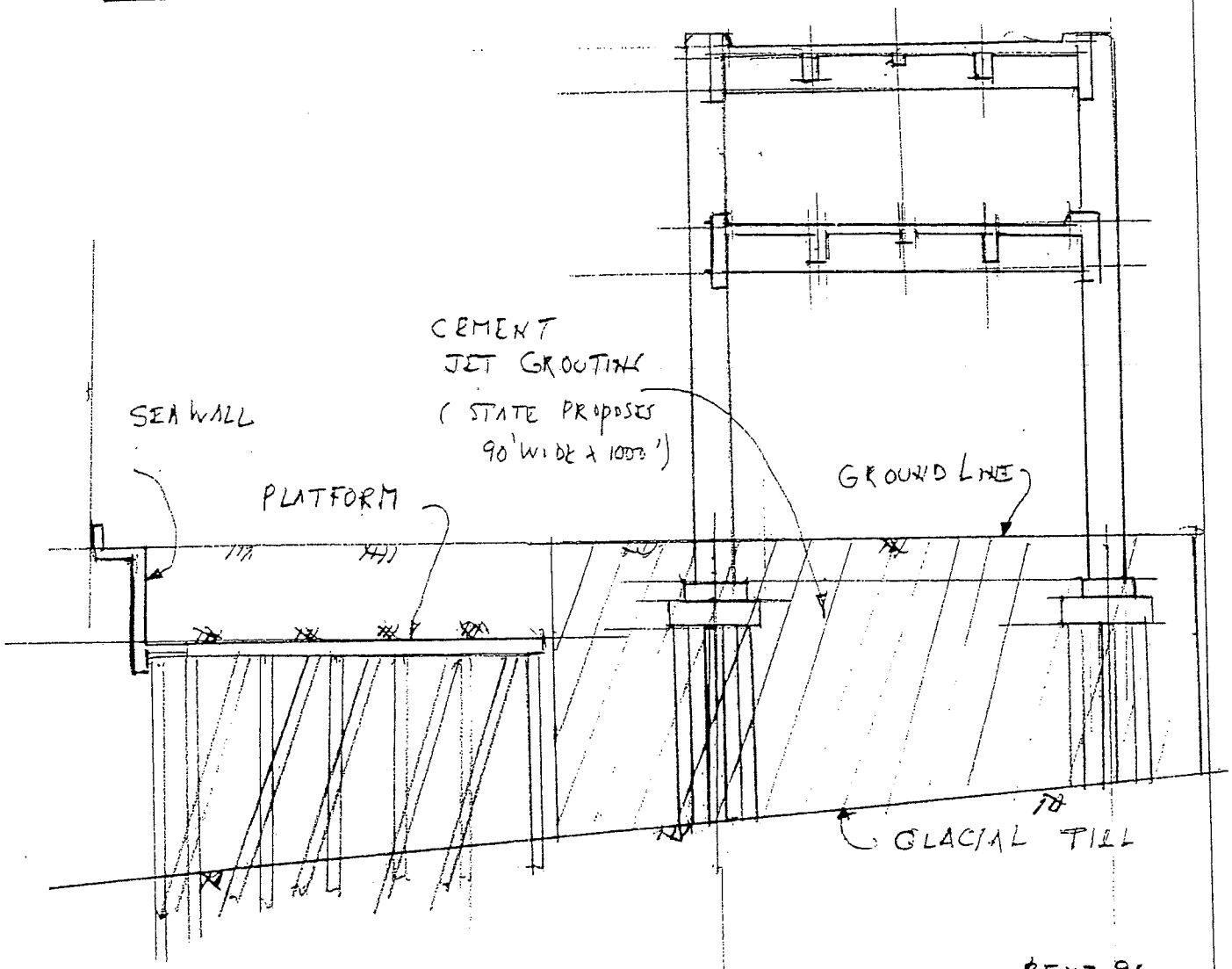

SECTION @ GRAVITY SEA WALL (NEAR YESLER) BENT 96

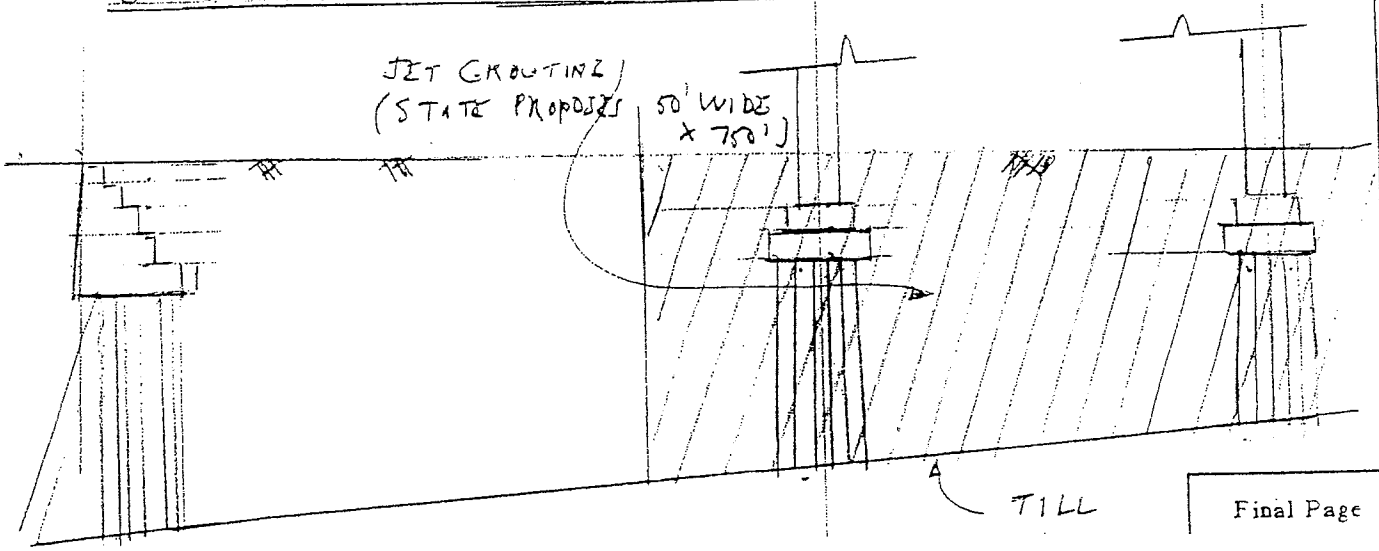

Final Page

ALASKAN WAY VIADUCT

CROSS SECTION @ SINGLE DECKS @ BENT 36

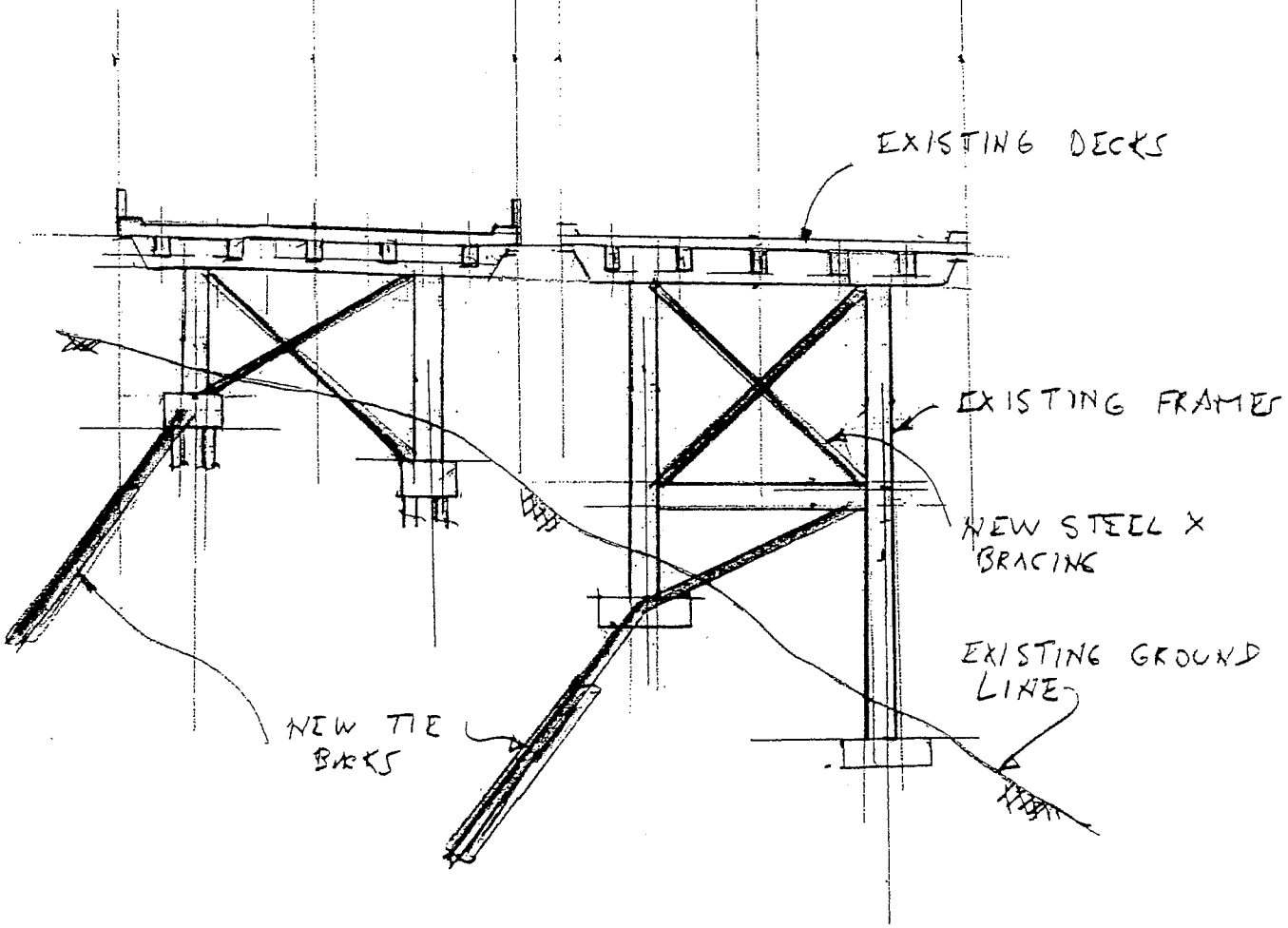

BENT 36

Final Page

APPENDIX B

RETROFIT DRAWINGS

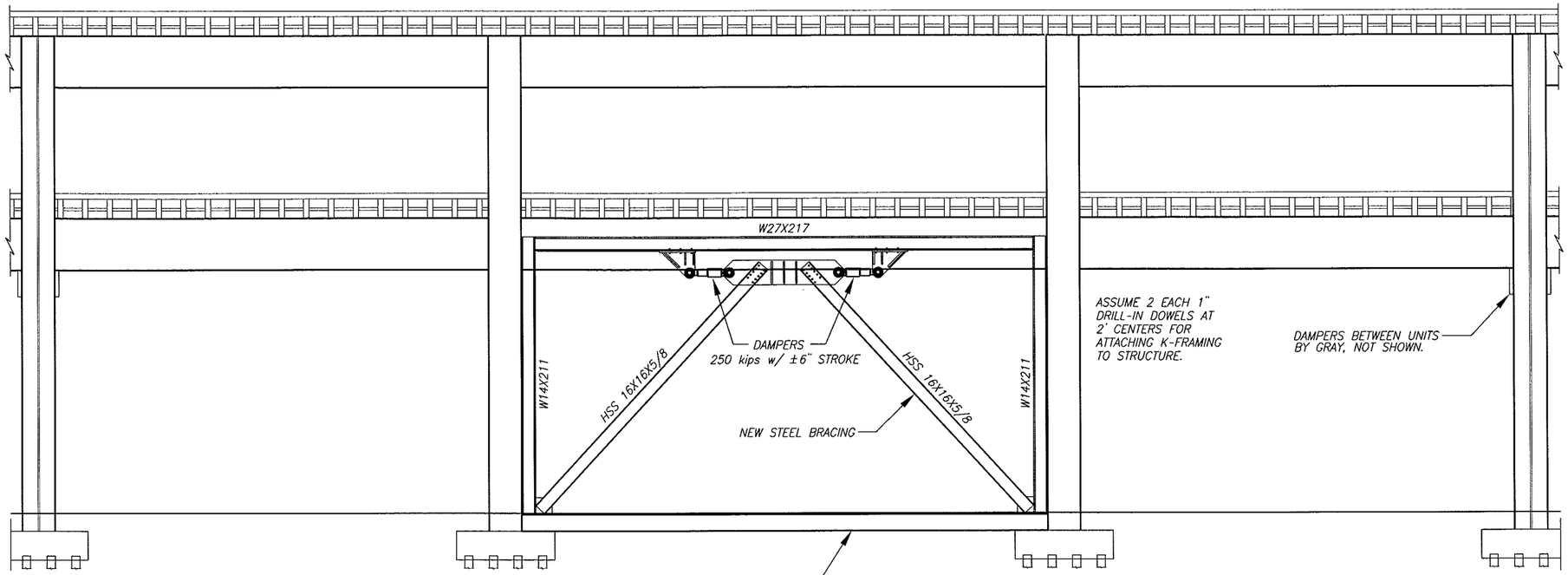

ELEVATION

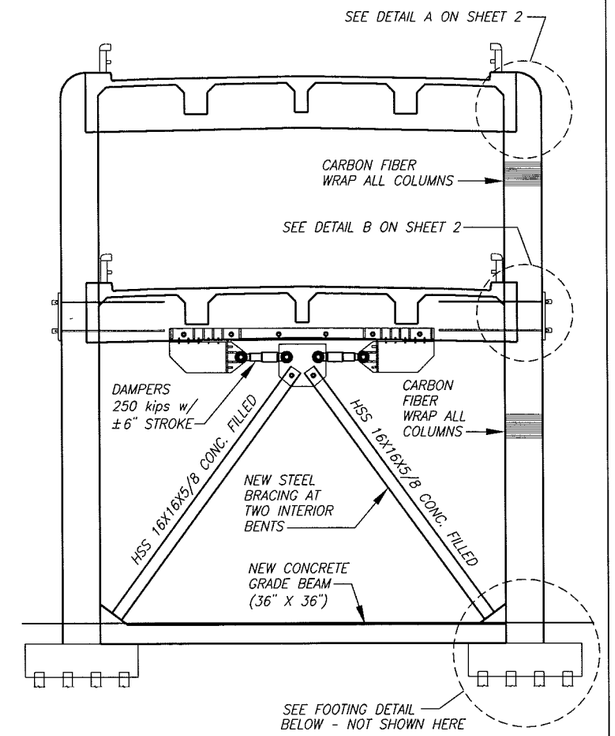

TYPICAL SECTION

NOTES:

1. GRAY PROPOSAL INCLUDES K-BRACES, VERTICAL & HORIZONTAL FRAMING, DAMPERS, GRADE BEAMS AND CARBON FIBER COLUMN WRAP.
2. ADDITIONAL RETROFIT ITEMS ARE REQUIRED. SEE TYLI, JULY 31, 2006. ADDED ITEMS ARE UPPER KNEE JOINT RECONSTRUCTION, FLOORBEAM CONNECTION REINFORCEMENT, FOOTING STRENGTHENING AND ADDITIONAL PILES.

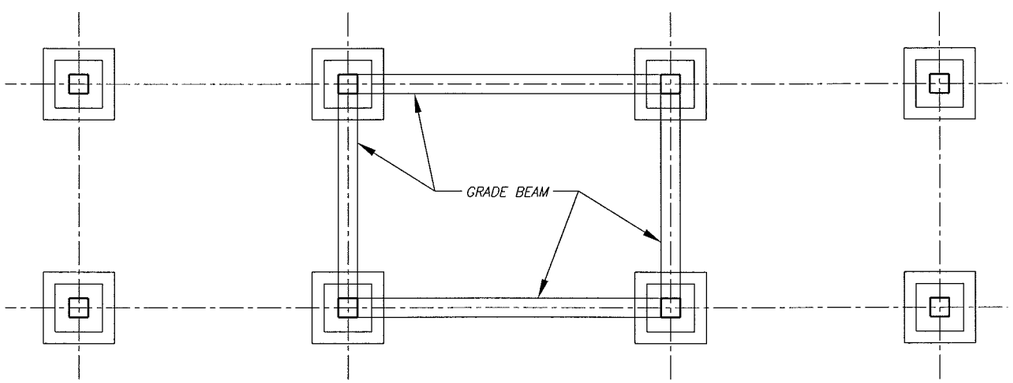

GROUND PLAN

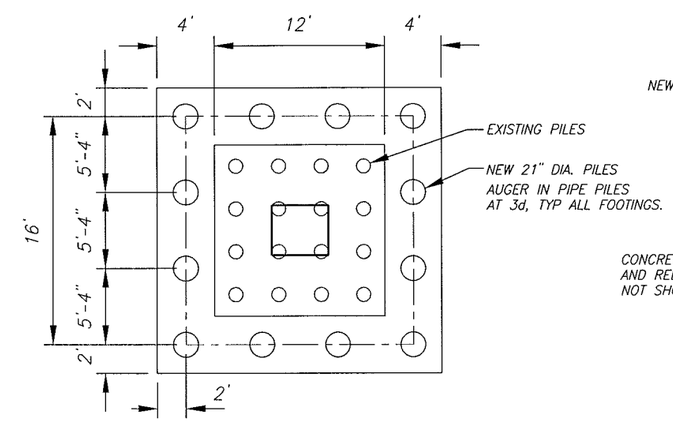

ADDITIONAL FOUNDATION - PLAN
(12'X12' FOOTING - OTHERS SIM)

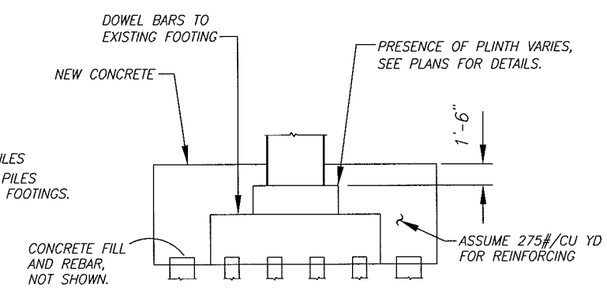

ADDITIONAL FOUNDATION - ELEVATION
(12'X12' FOOTING)

FILE NAME	$$$$$$$$DESIGNFILENAME$$$$$$				REGION NO. / STATE	FED.AID PROJ.NO.
TIME	$TIME$				10 / WASH	
DATE	$$$$DATE$$$					
DESIGNED BY					JOB NUMBER Y-7888	
ENTERED BY	?					
CHECKED BY					CONTRACT NO.	LOCATION NO. XL-2219
PROJ. ENGR.	?					
REGIONAL ADM.	?	REVISION	DATE	BY		

BRIDGE AND STRUCTURES OFFICE

CONCEPTUAL DESIGN
NOT FOR CONSTRUCTION

Washington State Department of Transportation
T·Y·LIN INTERNATIONAL

ALASKAN WAY VIADUCT & SEAWALL REPLACEMENT PROJECT
RETROFIT PLAN

GRAY RETROFIT
GENERAL LAYOUT

PLOT1

SHEET 1 OF 3 SHEETS

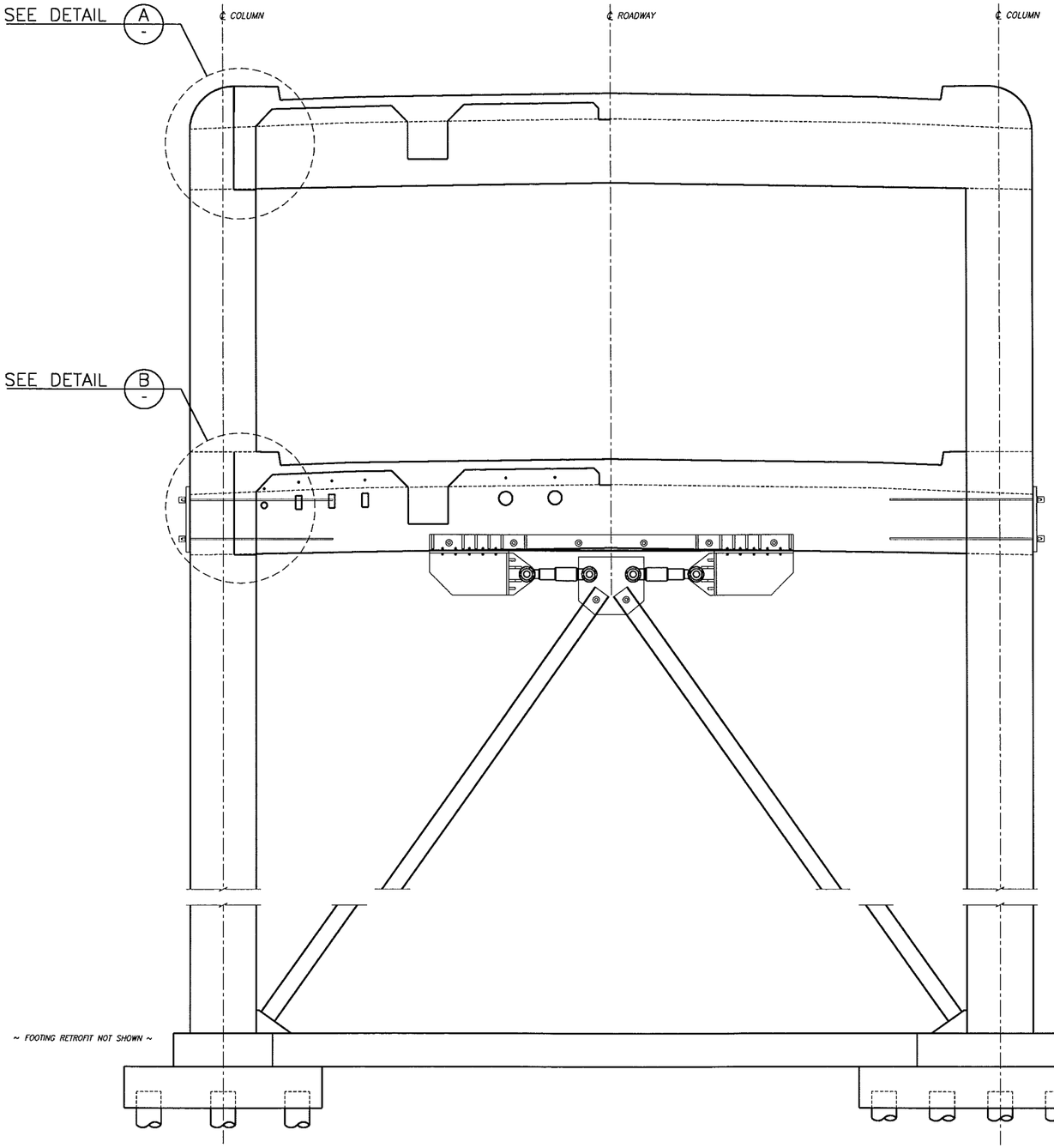

SECTION

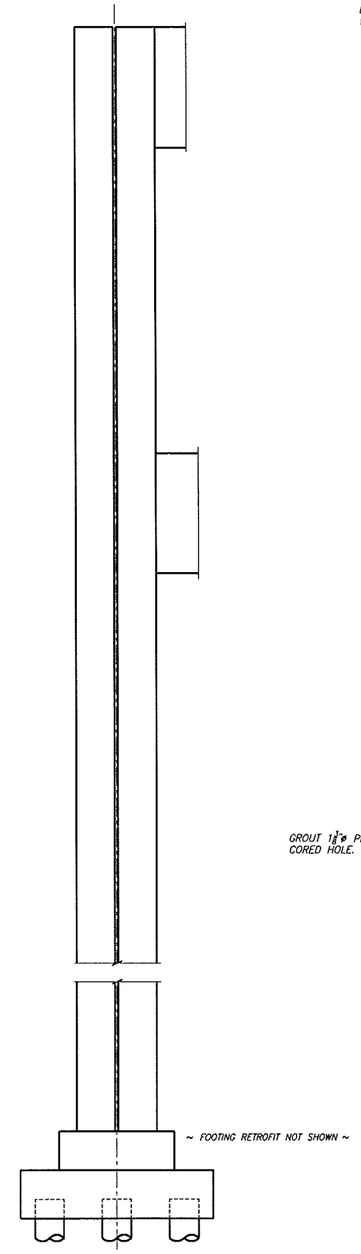

ELEVATION

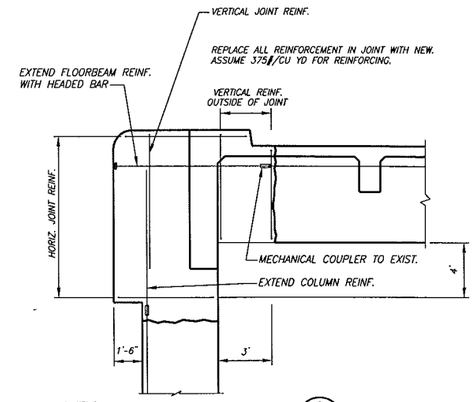

DETAIL A
REBUILT JOINT REINF.

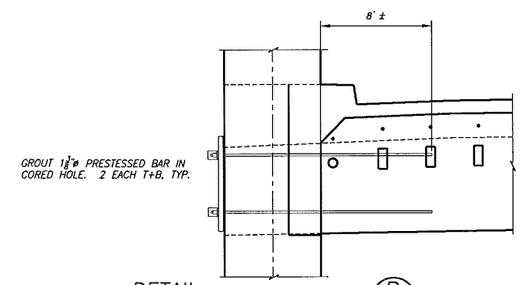

DETAIL B
T-JOINT RETROFIT

FILE NAME	$$$$$$$$DESIGNFILENAME$$$$$$						
TIME	$TIME$				REGION NO. 10	STATE WASH	FED.AID PROJ.NO.
DATE	$$$$DATE$$$						
DESIGNED BY					JOB NUMBER Y-7888		
ENTERED BY	?						
CHECKED BY					CONTRACT NO.	LOCATION NO. XL-2219	
PROJ. ENGR.	?						
REGIONAL ADM.	?	REVISION	DATE	BY			

BRIDGE AND STRUCTURES OFFICE

CONCEPTUAL DESIGN
NOT FOR CONSTRUCTION

Washington State Department of Transportation
T·Y·LIN INTERNATIONAL

ALASKAN WAY VIADUCT
&
SEAWALL REPLACEMENT PROJECT
RETROFIT PLAN

GRAY RETROFIT
ADDED JOINT RETROFIT

PLOT1

SHEET 2 OF 3 SHEETS

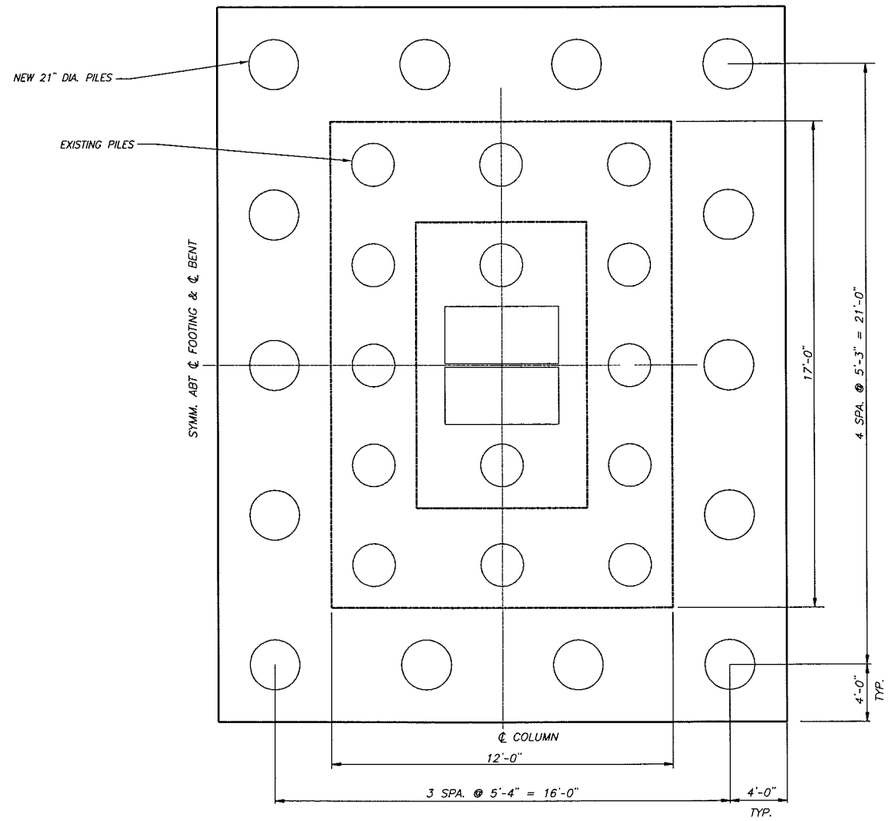

ADDITIONAL FOUNDATION - PLAN
(12' x 17' FOOTING)
EAST FOOTING - END BENT

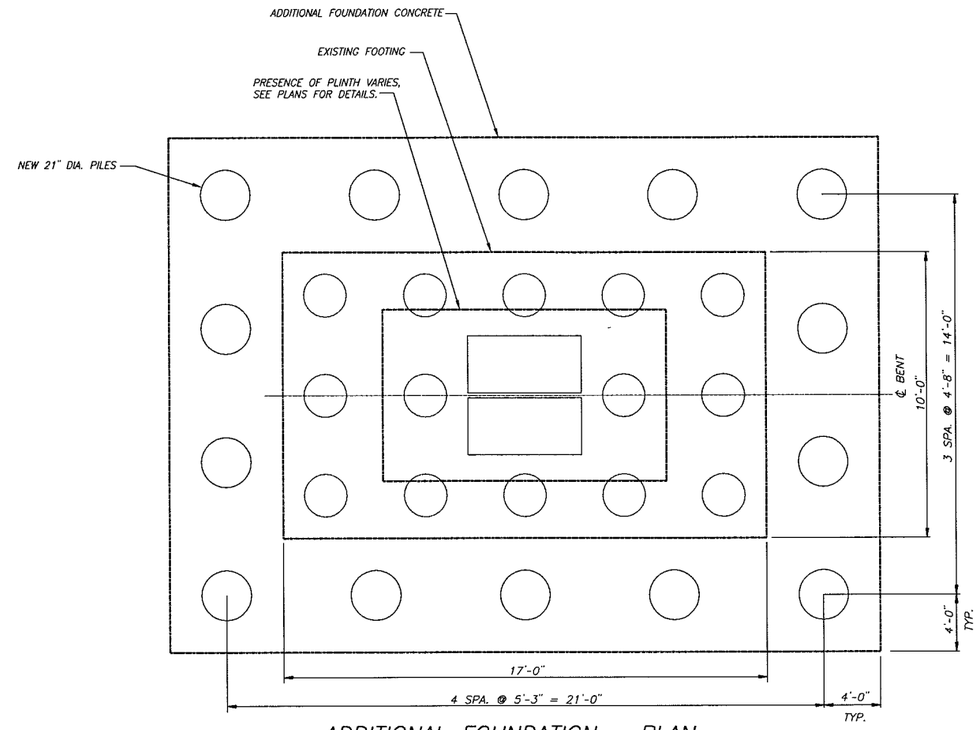

ADDITIONAL FOUNDATION - PLAN
(10' x 17' FOOTING)
WEST FOOTING - END BENT

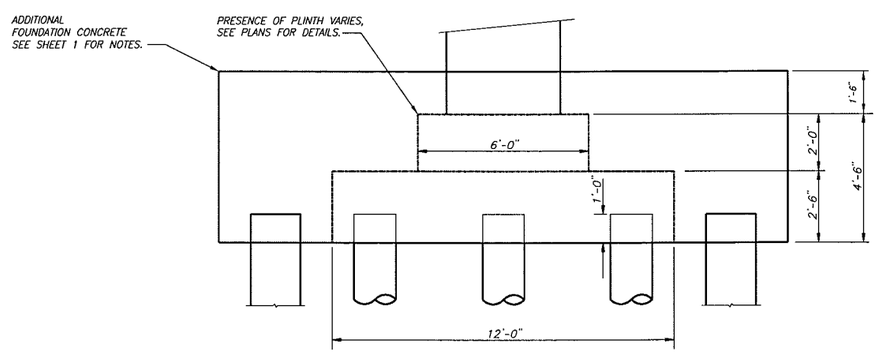

ADDITIONAL FOUNDATION - ELEVATION
(12' x 17' FOOTING)

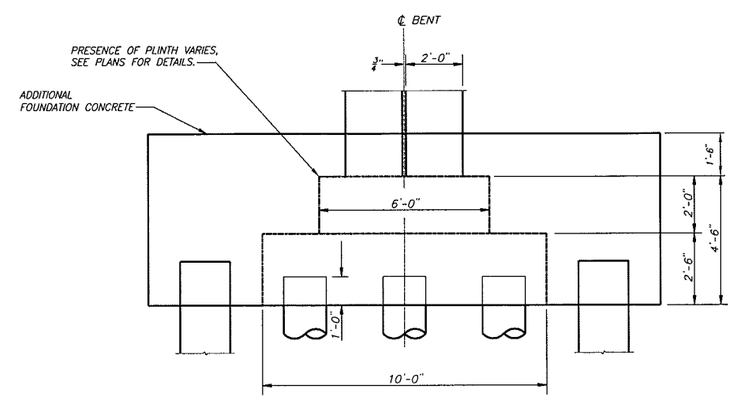

ADDITIONAL FOUNDATION - ELEVATION
(10' x 17' FOOTING)

FILE NAME	$$$$$$$$DESIGNFILENAME$$$$$$						
TIME	$TIME$				REGION NO. 10	STATE WASH	FED.AID PROJ.NO.
DATE	$$$$DATE$$$						
DESIGNED BY					JOB NUMBER Y-7888		
ENTERED BY	?						
CHECKED BY					CONTRACT NO.	LOCATION NO. XL-2219	
PROJ. ENGR.	?						
REGIONAL ADM.	?	REVISION	DATE	BY			

BRIDGE AND STRUCTURES OFFICE

CONCEPTUAL DESIGN
NOT FOR CONSTRUCTION

Washington State Department of Transportation
T·Y·LIN INTERNATIONAL

ALASKAN WAY VIADUCT
&
SEAWALL REPLACEMENT PROJECT
RETROFIT PLAN

GRAY RETROFIT
DETAILS 2

PLOT1

SHEET 3 OF 3 SHEETS