Standard Plans (Revision 8/3/2015)
Table of Contents

Section J Illumination, Signals, and ITS

J-10	Electrical Conduit Placement	7/18/97	
J-10.10-03	Cabinet Orientation, Conduit Layout and Foundation Detail	6/3/15	6 sheets
J-10.15-01	Cabinet Enclosure on Slope	6/11/14	
J-10.16-00	Service Cabinet Type A (0-60 Amp Type 120 Volt Single Phase)	6/3/15	2 sheets
J-10.17-00	Service Cabinet Type B (0-60 Amp Type 120/240 Volt Single Phase)	6/3/15	2 sheets
J-10.18-00	Service Cabinet Type C (0-60 Amp Type 240/480 Volt Single Phase)	6/3/15	2 sheets
J-10.20-00	Service Cabinet Type B Modified (0-200 Amp Type 120/240 Single Phase)	6/3/15	2 sheets
J-10.21-00	Service Cabinet Type D (0-200 Amp Type 120/240 Single Phase)	6/3/15	
J-10.22-00	Service Cabinet Type E (0 - 200 Amp Type 240/480 Single Phase)	5/29/13	2 sheets
J-15.10-01	Timber Light Standard	6/11/14	
J-15.15-02	Span Wire Installation	7/10/15	
J-20.10-03	Accessible Pedestrian PushButton Post (PPB) and Foundation	6/30/14	
J-20.11-02	Accessible Pedestrian PushButton Post with Curb Base	6/30/14	2 sheets
J-20.15-03	Accessible Breakaway Pedestrian PushButton (PPB) Post	6/30/14	
J-20.16-02	Pedestrian Signal Standard (Type PS) Details	6/30/14	
J-20.20-02	Pedestrian Signal Standard (Type PS) Electrical Details	5/20/13	
J-20.26-01	Accessible Pedestrian PushButton (PPB) Details	7/12/12	2 sheets
J-21.10-04	Type PS, Type 1, RM and FB Signal Standard Foundation Details	6/30/14	2 sheets
J-21.15-01	Type 1 Signal Standard Details	6/10/13	
J-21.16-01	Flashing Beacon Type 1 Signal Standard Details	6/10/13	
J-21.17-01	Flashing Beacon Type 1 Signal Standard Electrical Details	6/10/13	
J-21.20-01	Type 1 Signal Standard Electrical Details	6/10/13	
J-22.15-02	Ramp Meter Signal Standard Details	7/10/15	3 sheets

J-22.16-03	Ramp Meter Signal Standard Electrical Details	7/10/15	
J-26.10-02	Signal Standard Foundation Plan	3/15/12	
J-26.15-01	Signal Standard Foundation Placement	5/17/12	3 sheets
J-26.20-00	Temporary Signal Standard Adaptor	6/11/14	5 Sheets
J-27.10-00	Type 4 and 5 Strain Pole Standard Foundation	3/15/12	
J-27.15-00	Type 4 and 5 Strain Pole Standard	3/15/12	
J-28.10-01	Steel Light Standard	5/11/11	2 sheets
J-28.22-00	Steel Light Standard Placement (Slip Base)	8/7/07	2 sheets
J-28.24-01	Steel Light Standard Placement (Fixed Base)	6/3/15	
J-28.26-01	Steel Light Standard Placement (Miscellaneous)	12/2/08	
J-28.30-03	Steel Light Standard Foundation Types A & B	6/11/14	2 sheets
J-28.40-02	Steel Light Standard Base Mounting	6/11/14	
J-28.42-01	Steel Light Standard Anchor/Slip Plate for Slip Base	6/11/14	
J-28.43-00	Slip Base Adaptor for 4-Bolt Light Standard Base	6/11/14	
J-28.45-02	Steel Light Standard Elbow Mounting on Bridge & Retaining Wall	6/11/14	
J-28.50-02	Steel Light Standard Pole Base and Hand Hole Details	6/2/11	
J-28.60-01	Steel Light Standard Barrier Mounted Base	6/2/11	
J-28.70-01	Steel Light Standard Wiring Details	5/11/11	
J-29.10-00	Camera Pole Foundation Details	6/27/11	
J-29.15-00	Camera Pole Standard	6/27/11	2 sheets
J-29.16-01	Camera Pole Standard Details	6/20/13	
J-30.10-00	High Mast Luminaire Maintenance Pad	6/18/15	2 sheets
J-40.10-03	Locking Lid Standard Junction Box Types 1 & 2	5/20/13	2 sheets
J-40.20-02	Heavy-Duty Junction Box Types 4, 5, and 6	6/11/14	2 sheets
J-40.30-03	Locking Lid Standard Duty Junction Box Type 8	5/20/13	2 sheets
J-40.35-01	Sign Post-Mounted Junction Box	5/29/13	3 sheets
J-40.36-01	Nema 4X Non-Adjustable Junction Box	5/20/13	
J-40.37-01	Nema 3R Adjustable Flush-Mount Junction Box	5/20/13	2 sheets
J-40.38-01	Top Entry Nema 4X Surface-Mounted Junction Box	5/20/13	

J-40.39-00	Front Entry Nema 4x Surface-Mount Junction Box	5/20/13	
J-40.40-00	Nema 4x Junction Box in Sidewalk Located on Structure	5/20/13	
J-50.10-00	Type 1 Induction Loop	6/3/11	
J-50.11-00	Type 2 Induction Loop	6/3/11	2 sheets
J-50.12-00	Type 3 Induction Loop	6/3/11	3 sheets
J-50.15-00	Induction Loop Details	6/3/11	3 sheets
J-50.16-01	Preformed Loop Installation Details in New Bridge Deck	3/22/13	3 sheets
J-50.20-00	Permanent Traffic Recorder Installations	6/3/11	3 sheets
J-50.25-00	Weigh-In-Motion Site Installation Details	6/3/11	2 sheets
J-50.30-00	Permanent Traffic Recorder & Weigh-In-Motion Details	6/3/11	3 sheets
J-60.05-00	Typical Grounding Details	6/16/11	4 sheets
J-60.11-00	Conduit Installation in Traffic Barrier on Retaining Wall	5/20/13	2 sheets
J-60.12-00	Conduit Installation in Single-Slope Concrete Barrier (Dual-Faced)	5/20/13	
J-60.13-00	Stainless Steel Channel	6/16/10	
J-60.14-00	Stainless Steel Channel Mounting Details ~ on Column or Pole	6/16/10	
J-75.10-02	Signal Head Mounting Details ~ Pole and Post Top Mountings	7/10/15	
J-75.20-01	Signal Head Mounting Details ~ Mast Arm and Span Wire Mountings	7/10/15	2 sheets
J-75.30-02	Miscellaneous Signal Details	7/10/15	
J-75.40-01	Overhead Sign Electrical Details (Monotube Structure)	6/11/14	2 Sheets
J-75.41-00	Signal Bridge Standard Electrical Details	6/11/14	4 Sheets
J-75.45-01	Overhead Sign Electrical Details (Truss Structure)	6/11/14	2 Sheets
J-90.10-01	Pull Box	6/27/11	2 sheets
J-90.20-01	Cable Vault	6/27/11	2 sheets
J-90.21-00	Small Cable Vault	6/30/14	2 Sheets

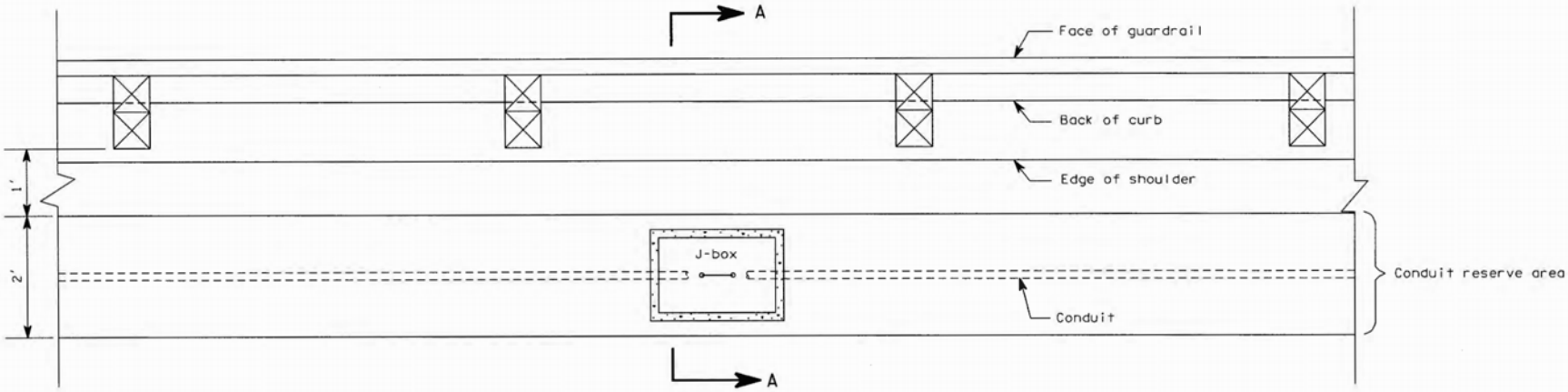

PLAN

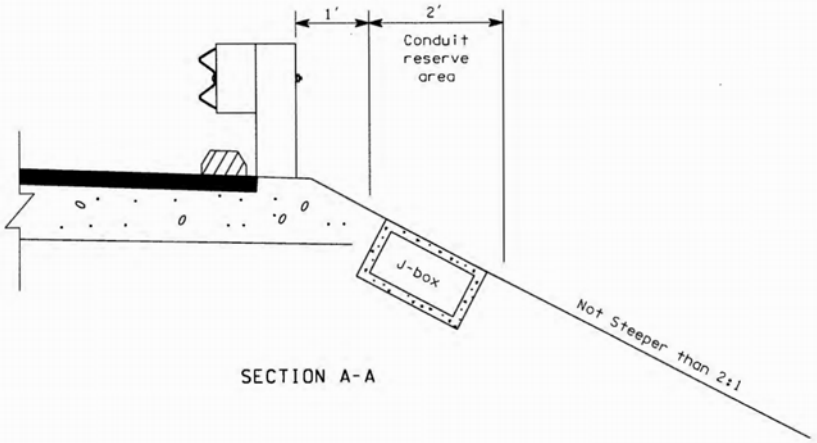

SECTION A-A

ELECTRICAL CONDUIT PLACEMENT

WILLIAM D BROWN
STATE OF WASHINGTON
20214812
REGISTERED
PROFESSIONAL ENGINEER
EXPIRES SEPT 10, 1998

STANDARD PLAN J-10

APPROVED FOR PUBLICATION

Clifford E. Mayfield 7/18/97

STATE DESIGN ENGINEER — DATE

WASHINGTON STATE DEPARTMENT OF TRANSPORTATION
OLYMPIA, WASHINGTON

DRAWN BY: COLBY FLETCHER

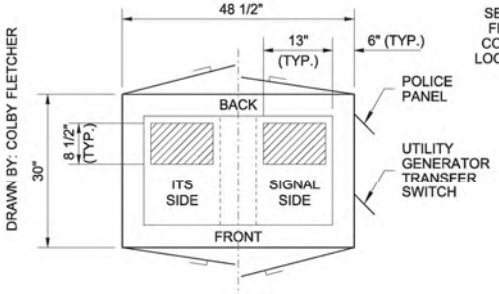

TYPE 332D CONTROLLER CABINET

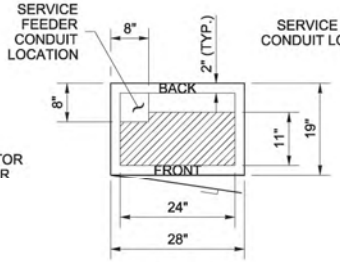

TYPE D SERVICE CABINET

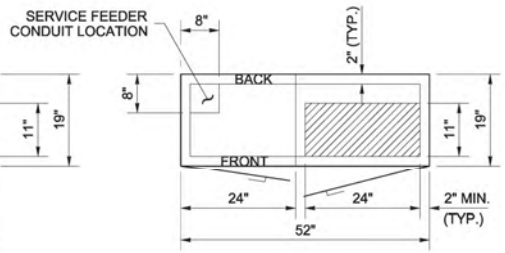

TYPE E SERVICE CABINET

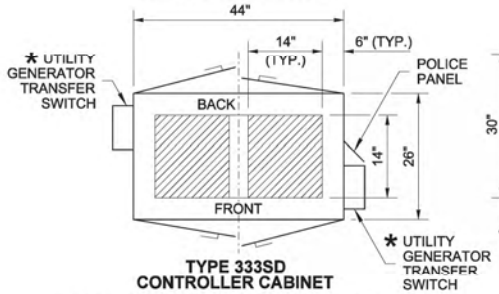

TYPE 333SD CONTROLLER CABINET

* TO BE INSTALLED BY REGION MAINTAINANCE PERSONNEL ~ PROVIDE A 15' (FT) PIGTAIL (SEE NOTE 12)

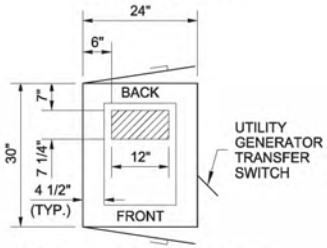

TYPE 332 UNINTERRUPTABLE POWER SUPPLY CABINET

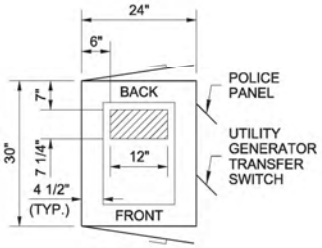

TYPE 332 CONTROLLER CABINET

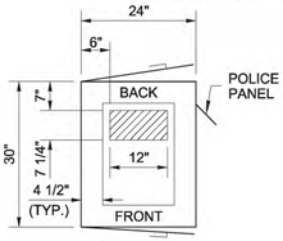

TYPE 334

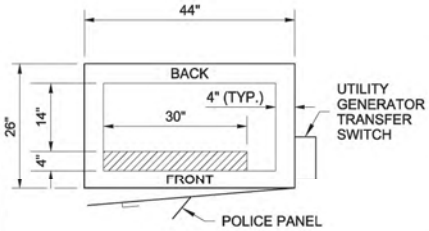

NEMA P44 CONTROLLER CABINET

NOTES

1. The cabinets shown in these details are shown for illustrative purposes only. The Contractor shall verify the plans and substitute those cabinets in place of the cabinets shown in these details. The Contractor shall install each cabinet type in the locations and orientations shown in these details.
2. The Contractor shall install the conduits in the locations shown. Conduits shall extend 2" (in) min. above the coupling. The grounded end bushing on GRS conduit and the end bell bushing on PVC conduit shall extend 3" (in) max. above the coupling. The conduit containing unfused utility conductors shall extend into the utility chase.
3. The ground rods, drain tiles, associated conduits, and #4 rebar (90° with 30" (in) legs), may be omitted if no transformer or service cabinet is to be installed.
4. The cabinets shall be attached to the foundation with 4 each: 1/2" (in) × 10" (in) × 2" (in) × 4" (in) anchor bolts (see Detail on Sheet 4 of 6), washers, and nuts conforming to **Standard Specification 9-06.5(1)** and hot-dip galvanized after fabrication in accordance with AASHTO M 232. Locate anchor bolts per cabinet manufacturer. Stainless steel epoxy anchors may be used as an alternative, and shall be 1/2" (in) diameter x 9" (in), or 5/8" (in) diameter x 8" (in). All threaded rod (conforming to ASTM F593), washers (conforming to ASTM A240), and nuts (conforming to ASTM F594), shall be Type 304 stainless steel. Bolts shall extend 1 1/2" (in) min. to 2" (in) max. above the concrete pad.
5. All reinforcing steel shall be embedded 2" (in) below surface of concrete.
6. Place a 1/2" (in) bead of silicone between cabinets and foundation.
7. Two ground rods are required for foundations with a service cabinet or transformer cabinet. See **Standard Plan J-60.05** for details.
8. Concrete shall be class 3000. See **Standard Specification 8-20.3(4)**.
9. Verify dead front locations from manufacturer prior to placing conduit in foundation.
10. Foundations installed in, or adjacent to, sidewalks shall be constructed with the top flush with the sidewalk surface and grade, not including concrete risers for cabinets. Omit chamfers where foundation abuts sidewalk.
11. If the slope is 3H : 1V or steeper, special considerations may be necessary for safety reasons. Coordinate with Maintenance and Project Engineer.
12. For Type 333SD Controller Cabinet, the cabinet vendor shall allow the Utility Transfer Switch to be installed on either side of the cabinet. The Utility Transfer Switch unit shall be shipped inside the cabinet for field installation by Region maintenance personnel.
13. Height of cabinet riser shall be adjusted to serve environmental needs. Type D Service cabinet shall have no riser. NEMA P44, Type 333SD, and Type B Modified shall have a 9' (in) riser. All other cabinets shall have a 3 1/2" (in) riser. See Contract for alternative height. Adjust length of conduit and rebar accordingly.
14. Use (1) #4 hoop for a 3 1/2" (in) cabinet footing and (2) #4 hoops for a 9" (in) cabinet footing.
15. The Police Panel location is set by industry standards on all Controller Cabinets.
16. See **Standard Plan J-10.20** for additional Foundation Construction and Conduit Routing for Type B Modified Service Cabinet with Controller Cabinet.
17. Verify pad size and location with Project Engineer prior to placing.
18. Field bend #4 rebar around the Generator Anti-Theft Tie-Down Unit when required.
19. See **Standard Plans J-10.21** and **J-10.22** for additional details for Type D and Type E Service Cabinets.
20. As an alternate, #3 rebar spaced at 1' - 0" O.C. longitudinally and transversely may be used.

CONSTRUCTION NOTES

1. Drive ground rods before placing concrete. Move rod(s) and drain tiles with cover(s) as required to achieve full ground penetration. Maintain a 6' (ft) minimum clearance between ground rods and 6" (in) from foundation edge as detailed on **Standard Plan J-60.05**.
2. GRS conduits penetrating all cabinets shall be terminated with grounding end bushing and bonded to the cabinet grounding bus. All PVC conduits penetrating cabinet shall be terminated with end bell bushings.
3. Install conduit couplings on all conduits. Place coupling tops flush with top of concrete. If PVC conduits are specified, the conduit stub and end bell bushing shall not be glued to the coupling.
4. 4" (in) diam. × 1/2" (in) deep sump. Slope foundation within cabinet footprint toward sump. Drainpipe shall be 3/8" (in) diam. polyethylene or copper tubing.
5. The Type D Service shall not be installed on a raised section. All other cabinets shall be installed on 3 1/2" (in) or 9" (in) cabinet footing.
6. Cabinet power supply conduit.
7. Conduits for service grounding electrodes.
8. When distance detailed in Typical Foundation Plan is greater than 8' (ft), this conduit and conductor shall be deleted.

CONDUIT PLACEMENT LOCATION AREA (OR TRANSFORMER HIGH-VOLTAGE CONDUIT AREA)

LOW-VOLTAGE CONDUIT PLACEMENT LOCATION

TABLE

CONTROLLER OR CABINET BASE	SIZE W × D (IN)	CAPACITY CONDUIT DIAMETER (IN)
TYPE 332	24" × 30"	12"
TYPE 332D	48.5" × 30"	24" (1)
NEMA P44	44" × 26"	15"
TYPE 333SD	44" × 26"	48" (2)
TYPE 334	24" × 30"	12"
TRANSFORMER	**SIZE W × D (IN)**	
UP TO 3 KVA	18" × 12"	8"
3.1 TO 12.5 KVA	24" × 20"	12"
12.6 TO 35.0 KVA	32" × 30"	15"
UNINTERRUPTABLE POWER SUPPLY	**SIZE W × D (IN)**	
332 CABINET	24" × 30"	12"

(1) 12" (IN) OF CONDUIT IN EACH LOCATION SHOWN

(2) 24" (IN) OF CONDUIT IN EACH LOCATION SHOWN

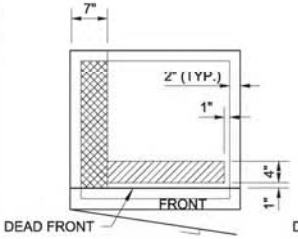

12.6 TO 35.0 KVA TRANSFORMER

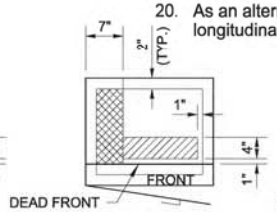

3.1 TO 12.5 KVA TRANSFORMER

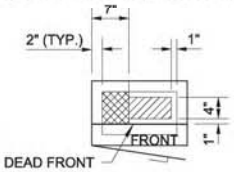

UP TO 3 KVA TRANSFORMER

PLAN VIEWS

CABINET FOOTPRINT AND CONDUIT PLACEMENT LOCATIONS

THEODORE JOSEPH BAILEY
STATE OF WASHINGTON
39820
REGISTERED
PROFESSIONAL ENGINEER

Bailey, Ted
May 26 2015 9:33 AM

CABINET ORIENTATION CONDUIT LAYOUT AND FOUNDATION DETAIL

STANDARD PLAN J-10.10-03

SHEET 1 OF 6 SHEETS

APPROVED FOR PUBLICATION
Bakotich, Pasco
Jun 3 2015 4:14 PM

STATE DESIGN ENGINEER

Washington State Department of Transportation

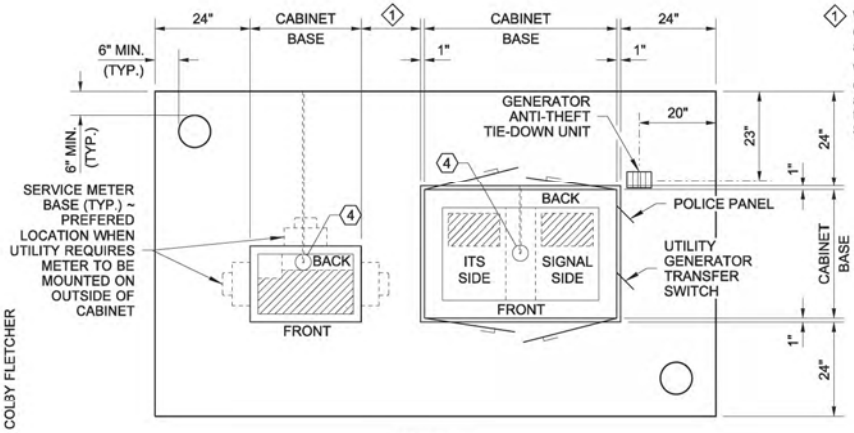

PLAN VIEW

1 With Meter Base mounted on inside of Service Cabinet, allow 6" (in) between cabinets.

With Meter Base mounted on outside of Service Cabinet, allow 36" (in) from face of meter to adjacent cabinet. See **Standard Plan J-10.21**.

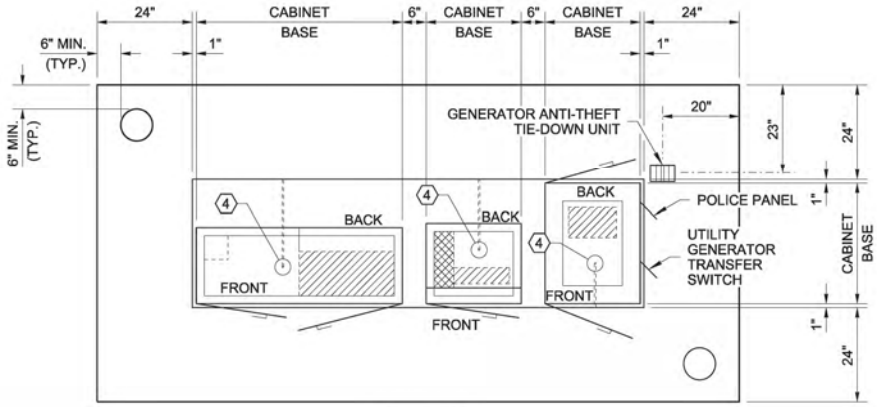

PLAN VIEW

DRAWN BY: COLBY FLETCHER

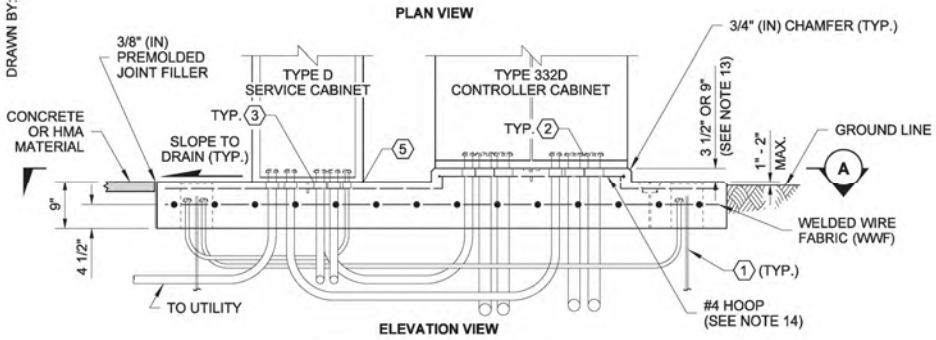

ELEVATION VIEW

TWO-CABINET FOUNDATION

(TYPE D SERVICE AND TYPE 332D CONTROLLER CABINET SHOWN)

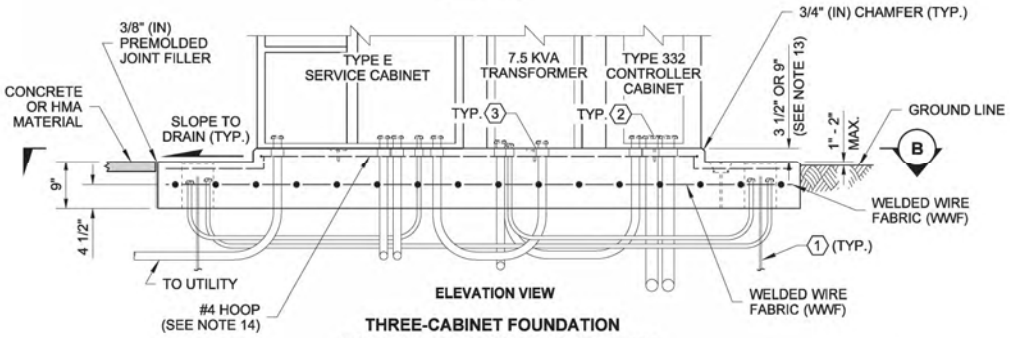

ELEVATION VIEW

THREE-CABINET FOUNDATION

(TYPE E SERVICE, 7.5 KVA TRANSFORMER AND TYPE 332 CONTROLLER CABINET SHOWN)

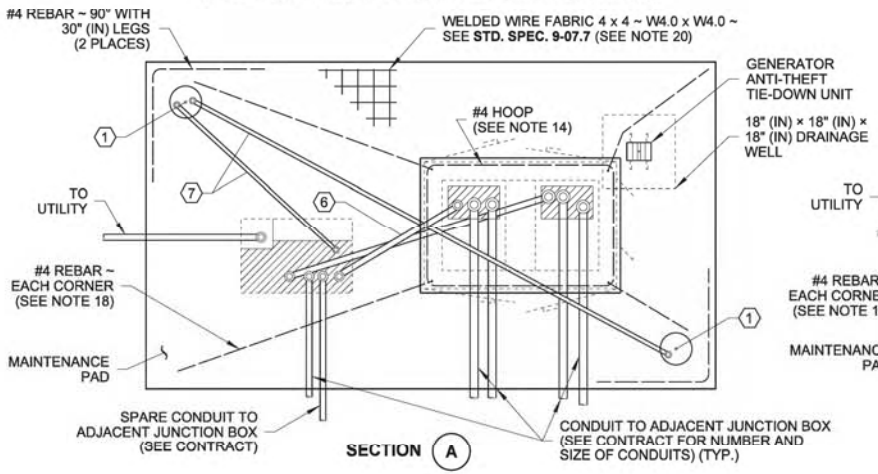

SECTION A

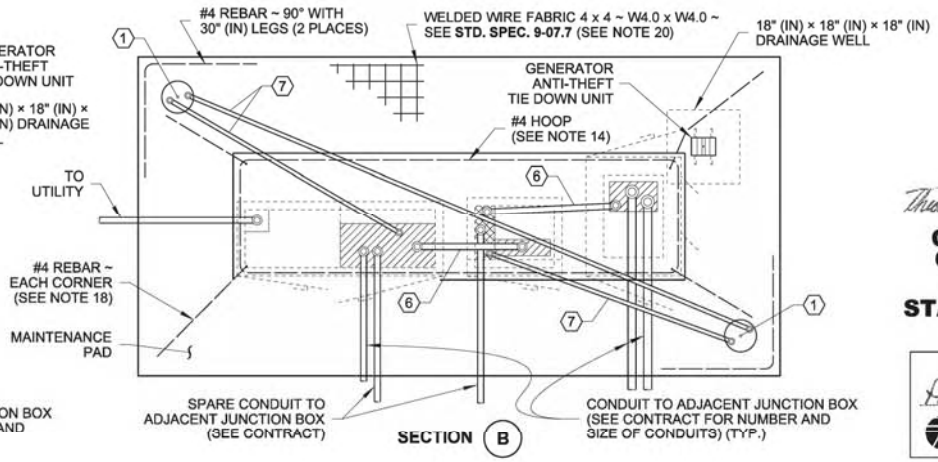

SECTION B

Theodore Joseph Bailey Bailey, Ted May 26 2015 9:34 AM

CABINET ORIENTATION CONDUIT LAYOUT AND FOUNDATION DETAIL

STANDARD PLAN J-10.10-03

SHEET 2 OF 6 SHEETS

APPROVED FOR PUBLICATION

Bakotich, Pasco Jun 3 2015 4:18 PM

STATE DESIGN ENGINEER

Washington State Department of Transportation

DRAWN BY: COLBY FLETCHER

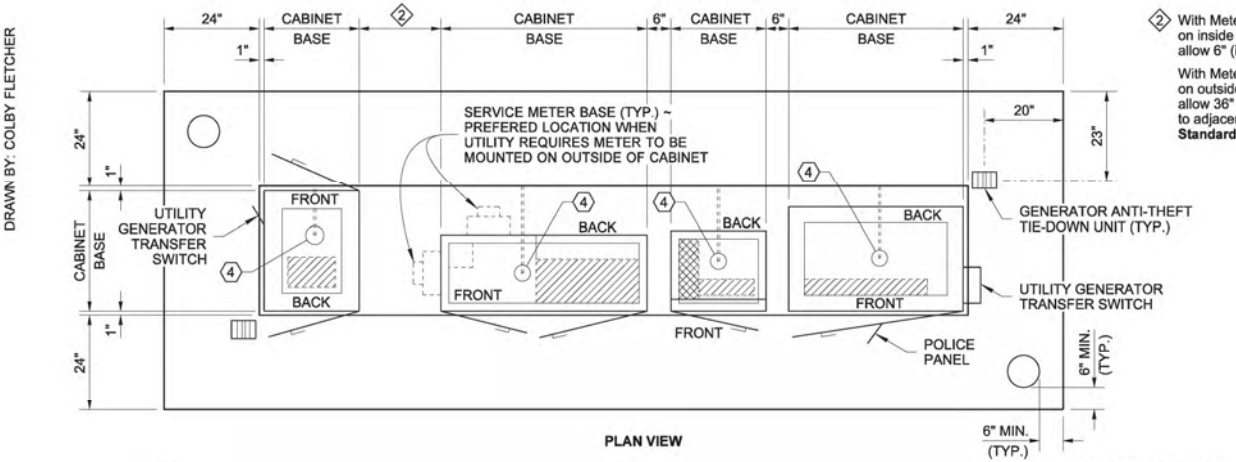

PLAN VIEW

2 With Meter Base mounted on inside of Service Cabinet, allow 6" (in) between cabinets.

With Meter Base mounted on outside of Service Cabinet, allow 36" (in) from face of meter to adjacent cabinet. See **Standard Plan J-10.22**.

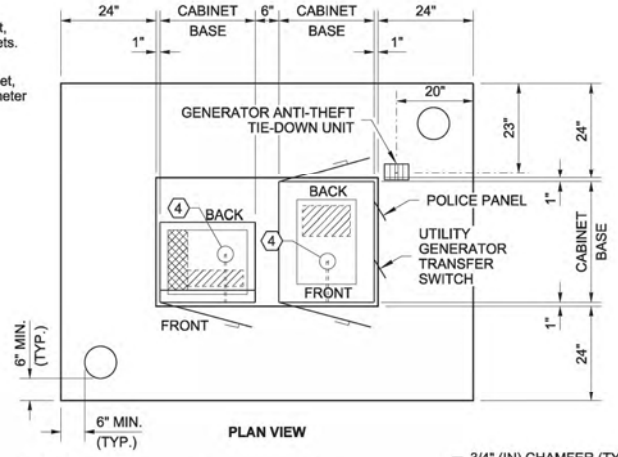

PLAN VIEW

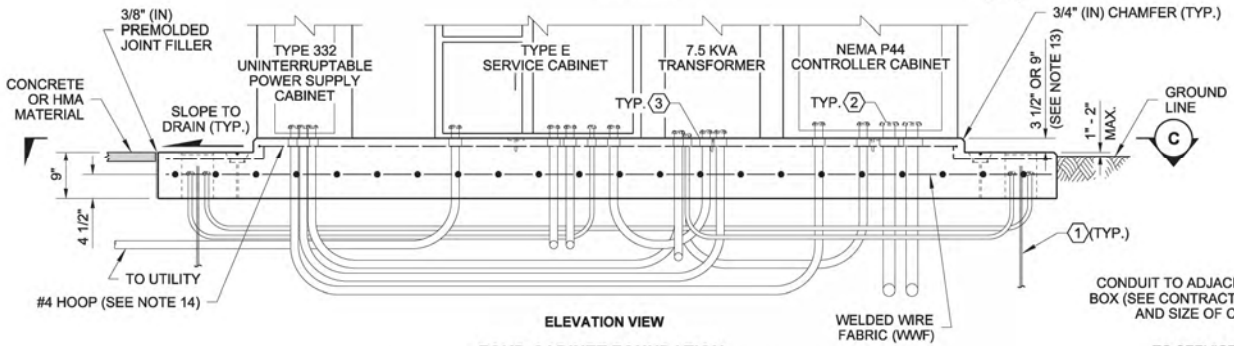

ELEVATION VIEW

FOUR-CABINET FOUNDATION

(TYPE 332 UNINTERRUPTABLE POWER SUPPLY CABINET, TYPE E SERVICE CABINET, 7.5 KVA TRANSFORMER AND NEMA P44 CONTROLLER CABINET SHOWN)

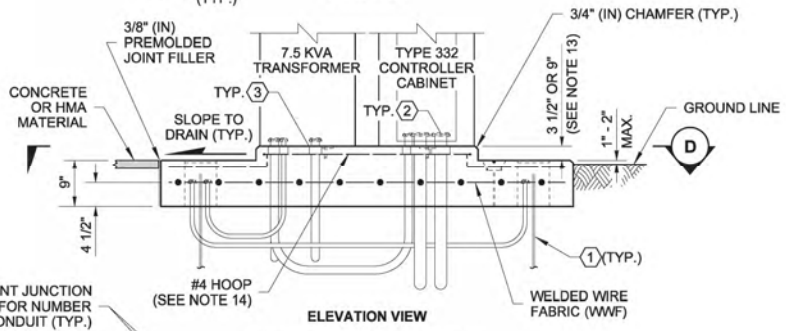

ELEVATION VIEW

TWO-CABINET FOUNDATION

(7.5 KVA TRANSFORMER AND TYPE 332 CONTROLLER CABINET SHOWN)

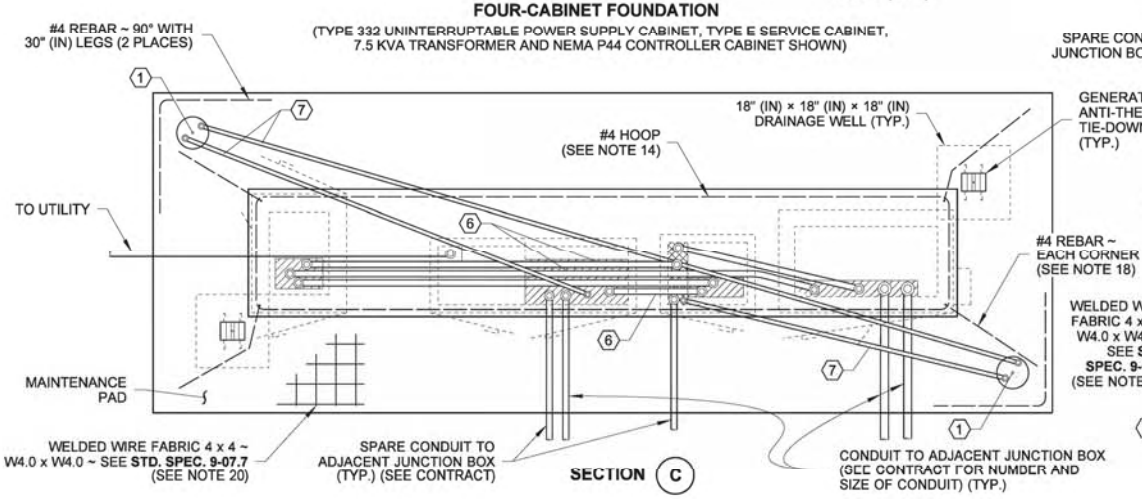

SECTION C

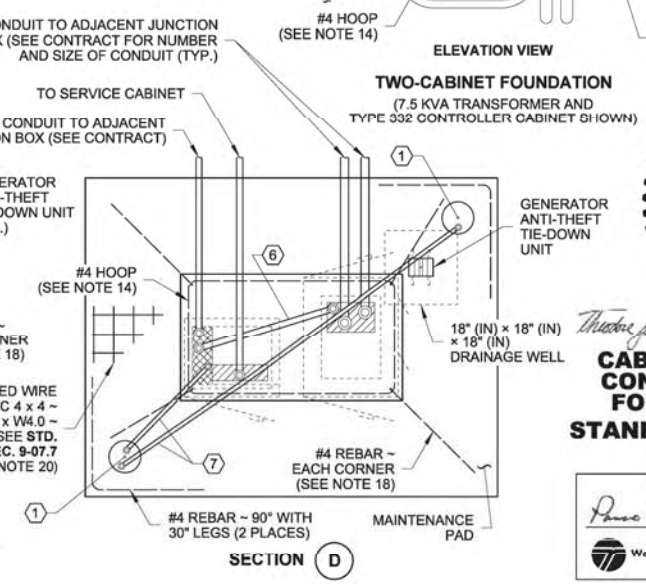

SECTION D

Bailey, Ted
May 26 2015 9:34 AM

CABINET ORIENTATION CONDUIT LAYOUT AND FOUNDATION DETAIL

STANDARD PLAN J-10.10-03

SHEET 3 OF 6 SHEETS

APPROVED FOR PUBLICATION
Bakotich, Pasco
Jun 3 2015 4:18 PM
STATE DESIGN ENGINEER
Washington State Department of Transportation

DRAWN BY: COLBY FLETCHER

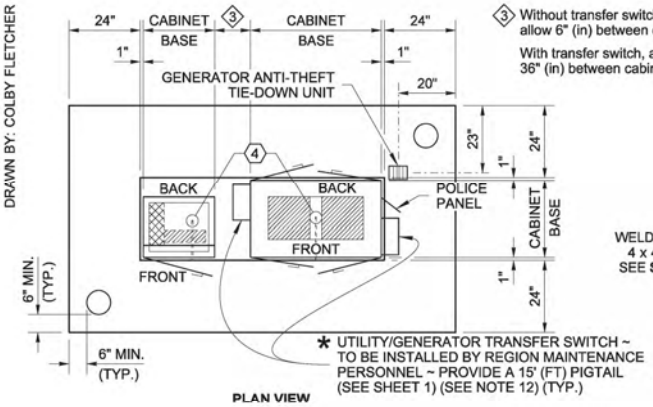

PLAN VIEW

③ Without transfer switch, allow 6" (in) between cabinets.

With transfer switch, allow 36" (in) between cabinets.

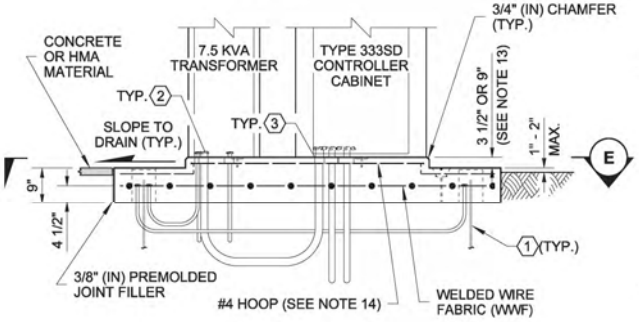

ELEVATION VIEW

TWO-CABINET FOUNDATION

(7.5 KVA TRANSFORMER AND TYPE 333SD CONTROLLER CABINET SHOWN)

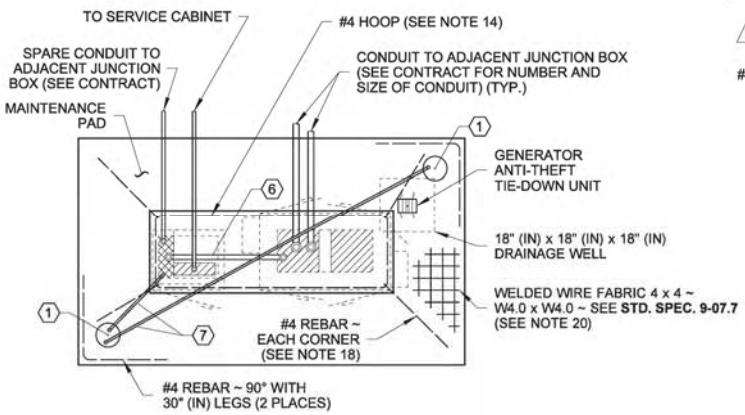

SECTION (E)

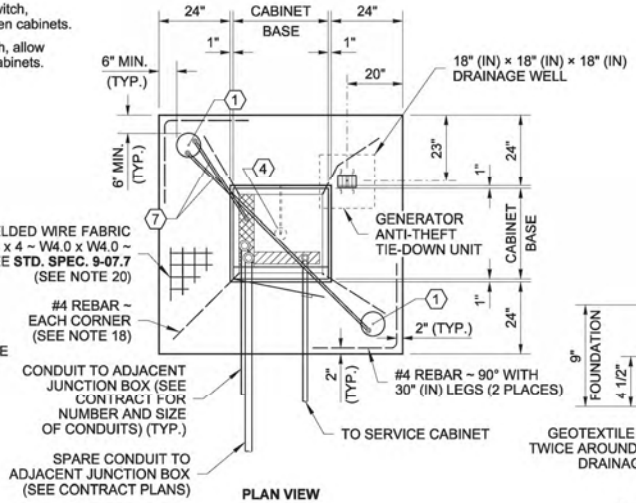

PLAN VIEW

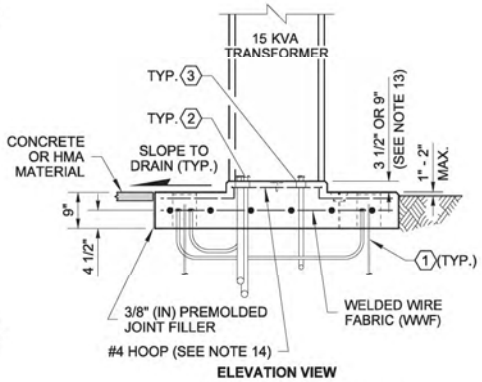

ELEVATION VIEW

SINGLE-CABINET FOUNDATION

(15 KVA TRANSFORMER SHOWN)

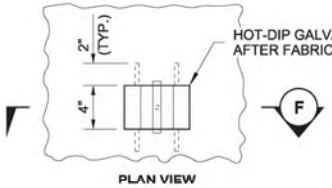

PLAN VIEW

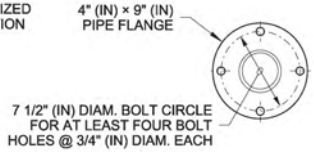

PEDESTAL BASE DETAIL

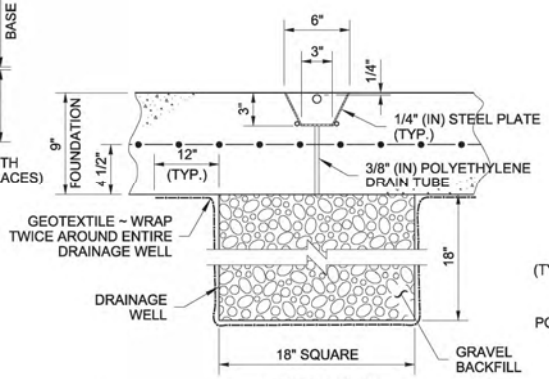

ELEVATION VIEW

SECTION (F)

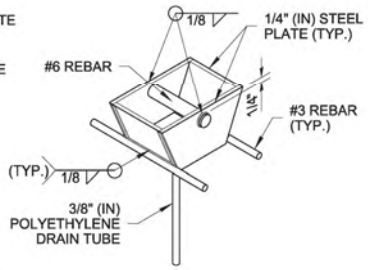

ISOMETRIC VIEW

GENERATOR ANTI-THEFT TIE-DOWN UNIT

(FABRICATE IF NOT AVAILABLE COMMERCIALLY)

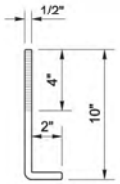

ANCHOR BOLT

(SEE NOTE 4)

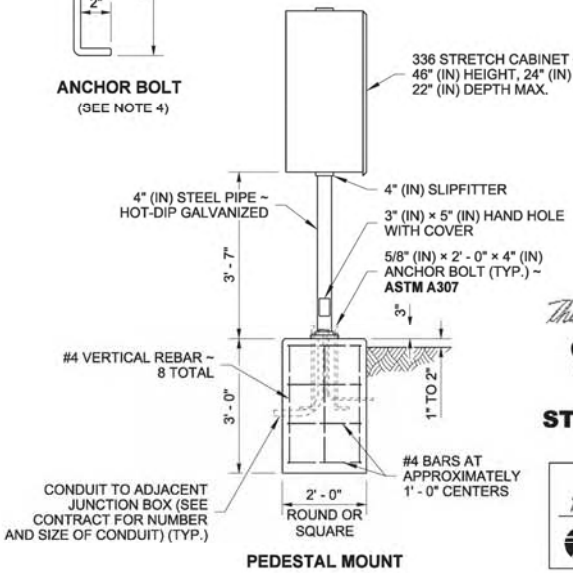

PEDESTAL MOUNT

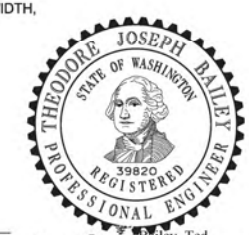

Bailey, Ted
May 26 2015 9:34 AM

CABINET ORIENTATION CONDUIT LAYOUT AND FOUNDATION DETAIL

STANDARD PLAN J-10.10-03

SHEET 4 OF 6 SHEETS

APPROVED FOR PUBLICATION
Bakotich, Pasco
Jun 3 2015 4:18 PM
STATE DESIGN ENGINEER
Washington State Department of Transportation

DRAWN BY: COLBY FLETCHER

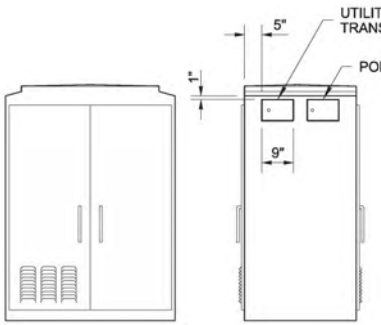

FRONT VIEW SIDE VIEW

TYPE 332D CONTROLLER CABINET

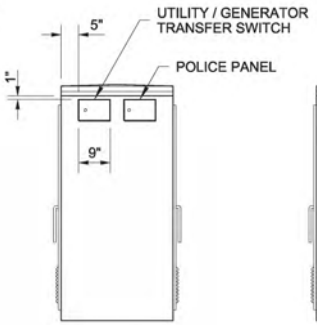

SIDE VIEW

TYPE 332 CONTROLLER CABINET

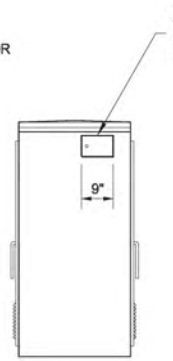

SIDE VIEW

TYPE 332 UNINTERRUPTABLE POWER SUPPLY (UPS) CABINET

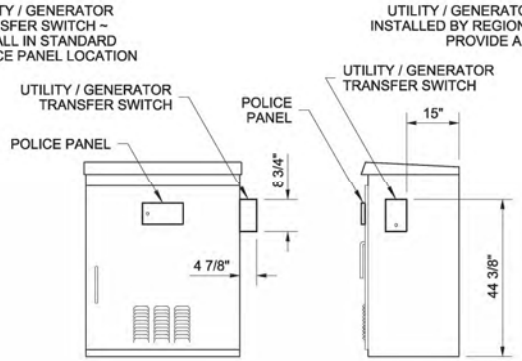

FRONT VIEW SIDE VIEW

NEMA P44 CONTROLLER CABINET

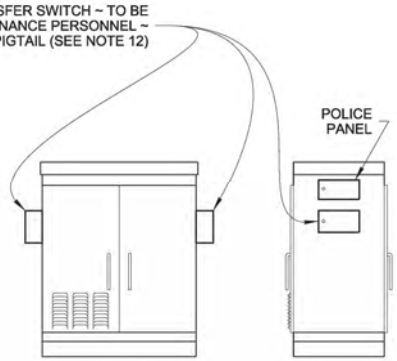

FRONT VIEW SIDE VIEW

TYPE 333SD CONTROLLER CABINET

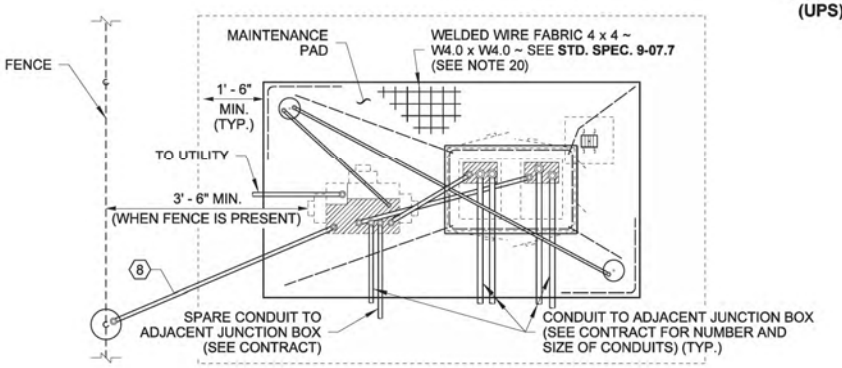

PLAN VIEW

TYPICAL FOUNDATION

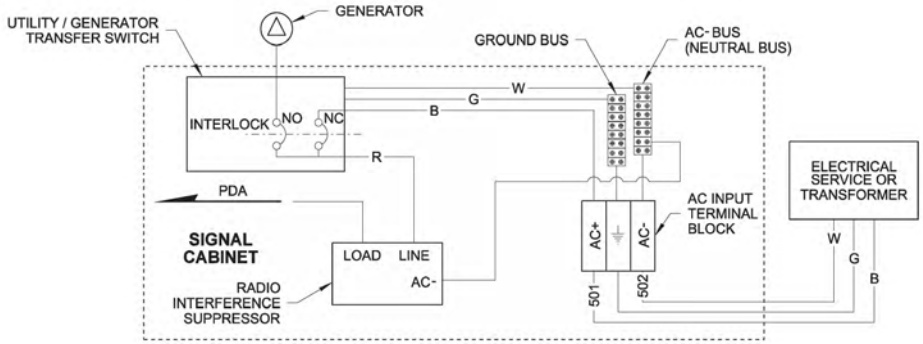

TRANSFER SWITCH CONNECTION TYPICAL WIRING DIAGRAM

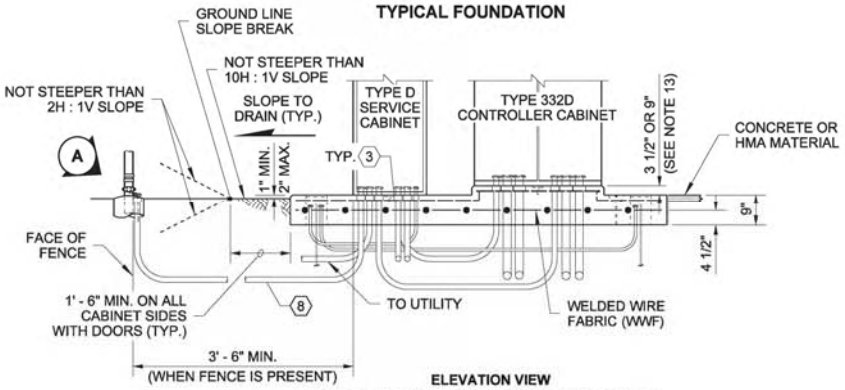

ELEVATION VIEW

TYPICAL FOUNDATION CROSS SECTION

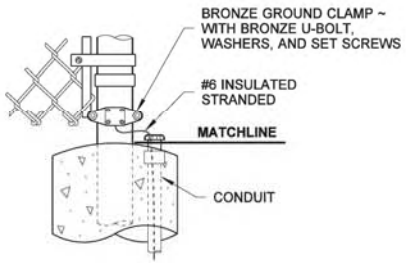

DETAIL A

Bailey, Ted
May 26 2015 9:34 AM

CABINET ORIENTATION CONDUIT LAYOUT AND FOUNDATION DETAIL

STANDARD PLAN J-10.10-03

SHEET 5 OF 6 SHEETS

APPROVED FOR PUBLICATION
Bakotich, Pasco
Jun 3 2015 4:19 PM
STATE DESIGN ENGINEER

Washington State Department of Transportation

DRAWN BY: COLBY FLETCHER

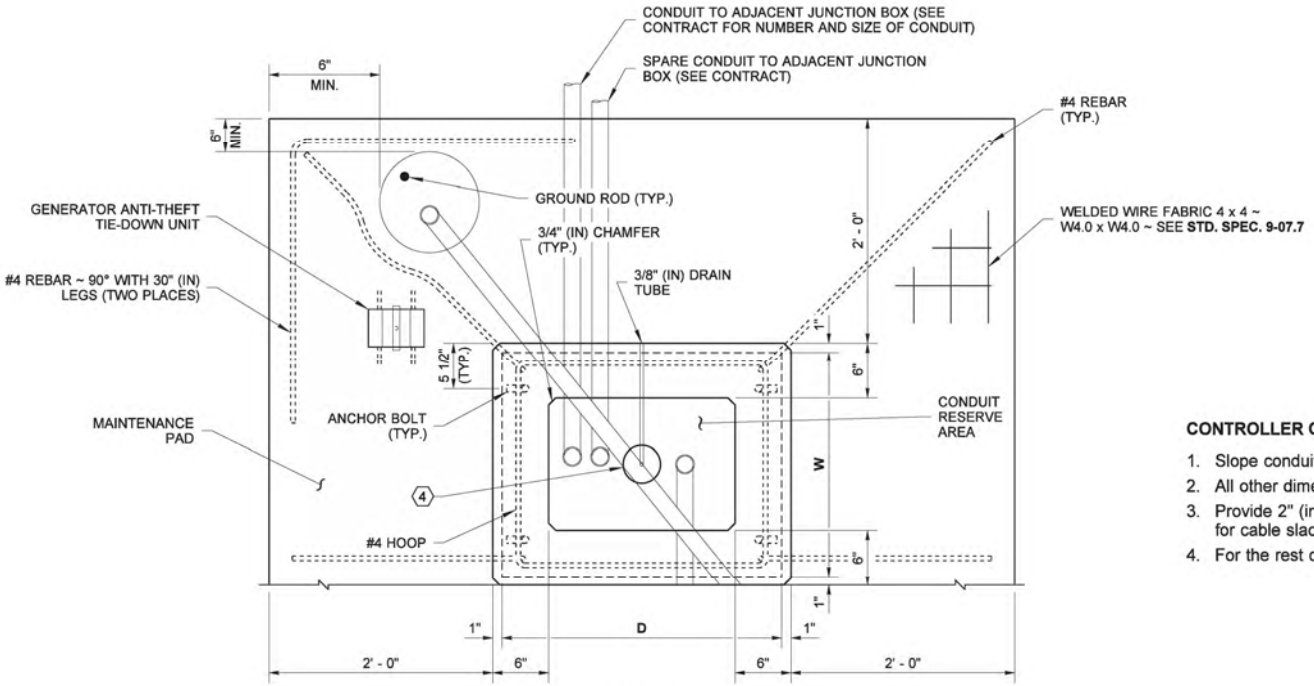

PLAN VIEW

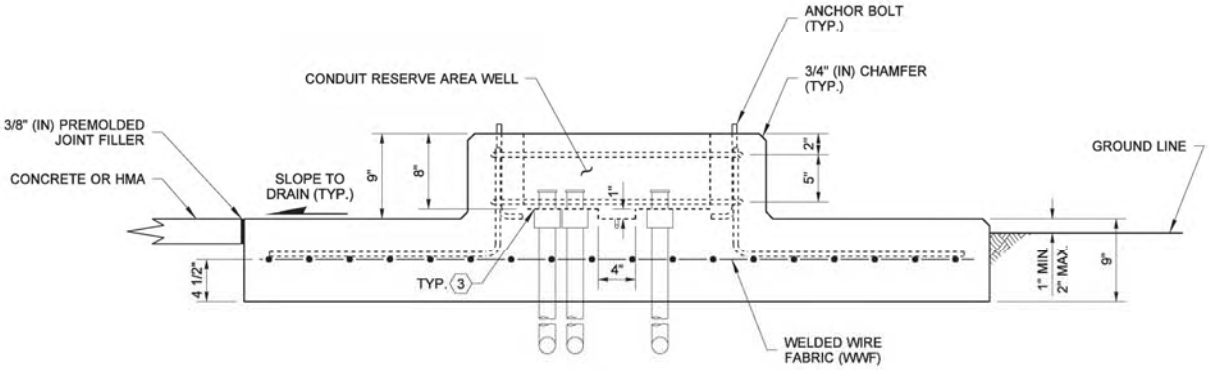

SECTION VIEW

CONTROLLER CABINET FOUNDATION DETAIL

CONTROLLER CABINET FOUNDATION NOTES

1. Slope conduit reserve area floor 1/4" (in) per 1' (ft) to the sump in the center.
2. All other dimensions shall be approved by the Engineer.
3. Provide 2" (in) clearance between conduit and edge of foundation well for cable slack.
4. For the rest of the foundation, see **Standard Plan J-10.20** for details.

Bailey, Ted
May 26 2015 9:35 AM

CABINET ORIENTATION CONDUIT LAYOUT AND FOUNDATION DETAIL

STANDARD PLAN J-10.10-03

SHEET 6 OF 6 SHEETS

APPROVED FOR PUBLICATION
Bakotich, Pasco
Jun 3 2015 4:15 PM
STATE DESIGN ENGINEER

Washington State Department of Transportation

DRAWN BY: COLBY FLETCHER

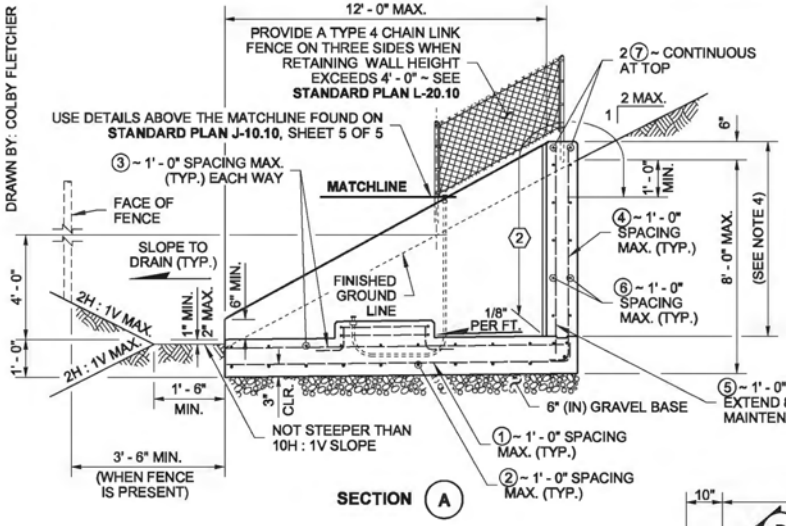

SECTION (A)

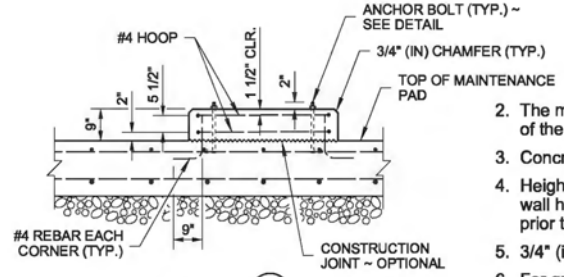

SECTION (B)

9" (IN) RAISED CABINET PAD SHOWN ~ 3 1/2" (IN) RAISED CABINET PAD IS SIMILAR, WITH ONE #4 TOP HOOP

NOTES

1. Contractor shall orient the maintenance pad to align with the direction of natural grade as shown. Obtain Engineer's approval of maintenance pad orientation prior to proceeding with construction.
2. The maintenance pad and retaining walls have been designed to meet the requirements of the AASHTO LRFD Bridge Design Specifications, 6th Edition, 2012.
3. Concrete for walls and bases shall be class 4000.
4. Height of wall varies to match slope of existing grade. Contractor shall field-determine wall height and each maintenance pad location and obtain approval from the Engineer prior to proceeding with construction.
5. 3/4" (in) chamfer for all exposed corners.
6. For grounding details not shown, see **Standard Plan J-60.05.**
7. For cabinet and conduit details not shown, see **Standard Plan J-10.10.**
8. The cabinets shall be attached to the foundation with 4 each: 1/2" (in) × 12" (in) × 2" (in) × 4" (in) anchor bolts (see Detail on this Sheet), washers, and nuts conforming to **Standard Specification 9-06.5(1)** and galvanized after fabrication in accordance with AASHTO M 232. Locate anchor bolts per cabinet manufacturer. Stainless steel epoxy anchors may be used as an alternative, and shall be 1/2" (in) diameter x 9" (in), or 5/8" (in) diameter x 8" (in). All threaded rod (conforming to ASTM F593), washers (conforming to ASTM A240), and nuts (conforming to ASTM F594), shall be Type 304 stainless steel. Bolts shall extend 1 1/2" (in) min to 2" (in) max above the concrete pad.

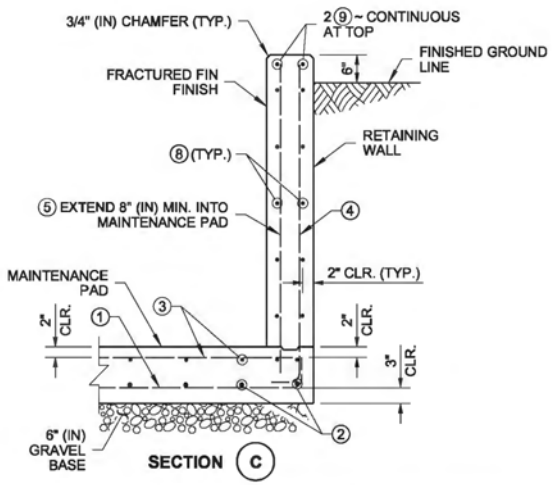

SECTION (C)

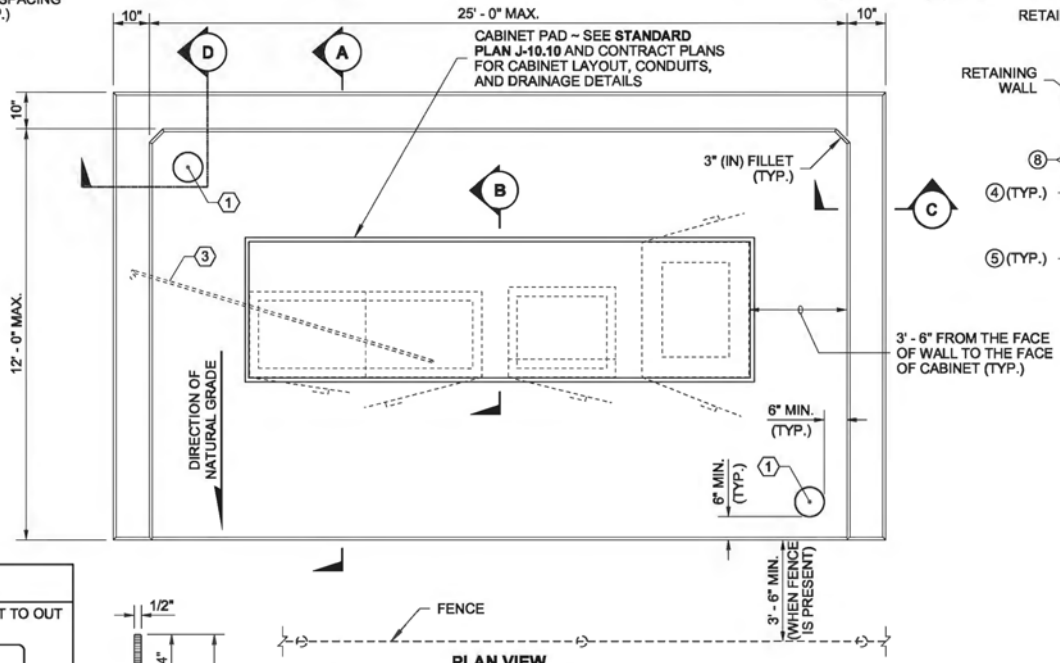

PLAN VIEW

CABINETS SHOWN FOR DISPLAY PURPOSES ONLY (SEE CONTRACT FOR CABINET LAYOUT)

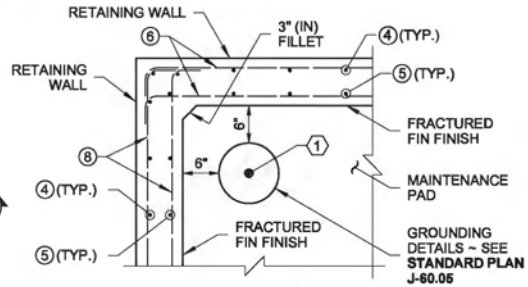

SECTION (D)

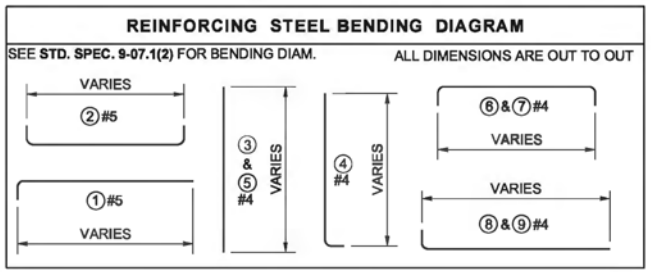

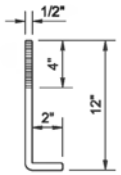

ANCHOR BOLT

SEE NOTE 8

① Drive ground rods before placing concrete. Move rod(s) and drain tile(s) with cover(s) as required to achieve full ground penetration. Maintain a 6' - 0" minimum clearance between ground rods as detailed on **Standard Plan J-60.05.**

② Limits of pigmented sealer. Typical for all retaining walls.

③ Delete conduit and conductor when fence is not present.

Zeldenrust, Richard
Jun 10 2014 10:44 AM

CABINET ENCLOSURE ON SLOPE

STANDARD PLAN J-10.15-01

SHEET 1 OF 1 SHEET

APPROVED FOR PUBLICATION
Bakotich, Pasco
Jun 11 2014 1:29 PM
STATE DESIGN ENGINEER

Washington State Department of Transportation

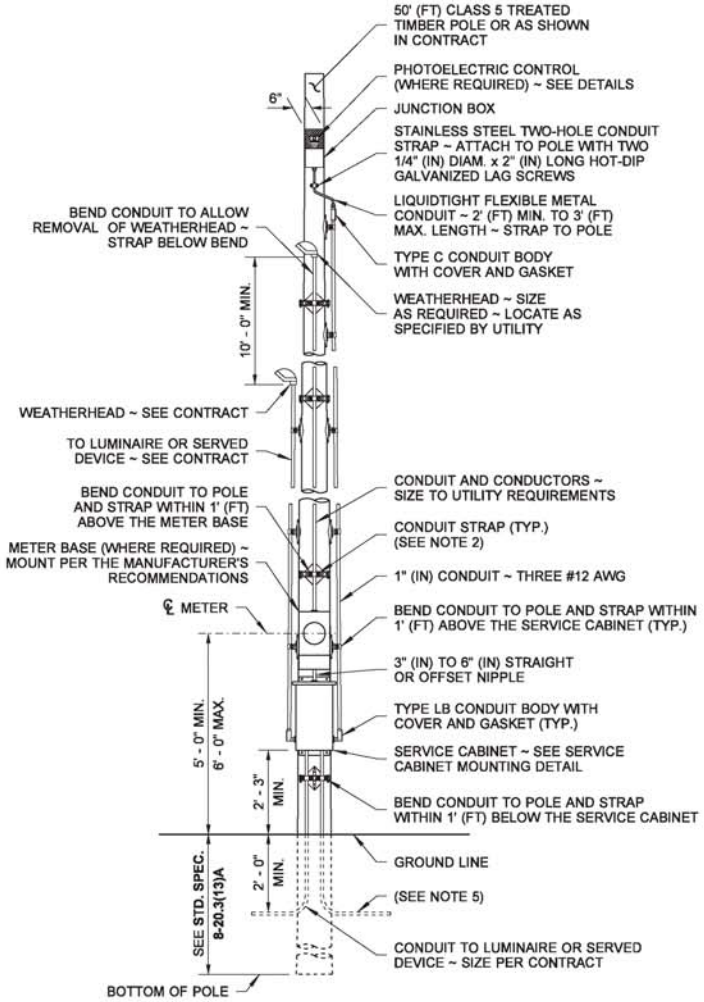

TYPE A SERVICE ~ 120 VOLT

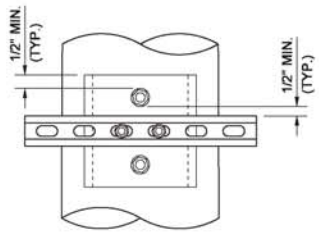

DETAIL (A)

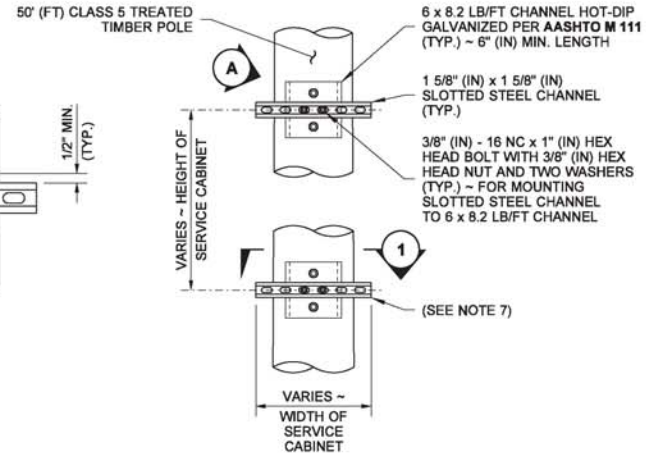

SERVICE CABINET MOUNTING DETAILS

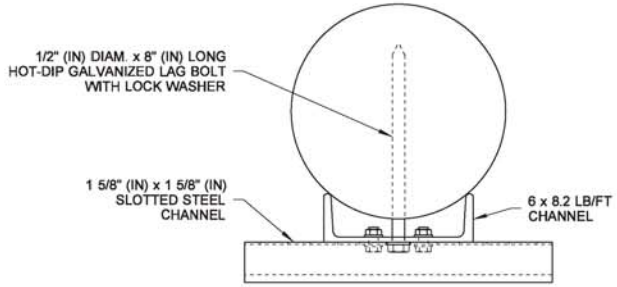

SECTION (1)

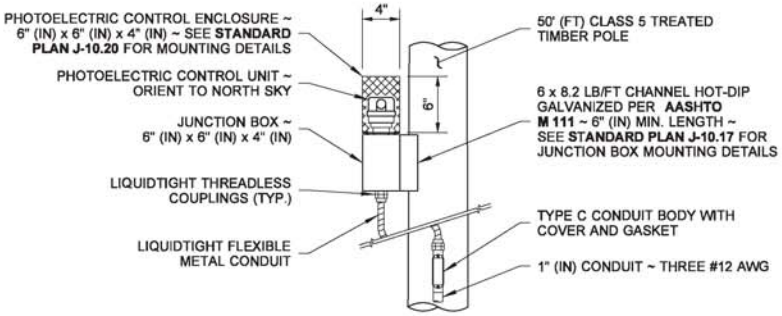

PHOTOELECTRIC CONTROL DETAILS

NOTES

1. Metering arrangements may vary with different serving utilities. The Contractor shall verify the requirements of the utility prior to installing the service equipment.
2. All service pole conduits shall be secured to the pole with two-hole conduit straps spaced at 5' (ft) maximum centers. See **Standard Plans J-60.13 and J-60.14** for steel channel support and wood pole mounting details. Where required by the Utility, an alternative-use hot-dip galvanized standoff bracket may be used. For details, see ALTERNATE STANDOFF BRACKET DETAIL on Sheet 2.
3. All risers and service equipment shall be installed on side of pole that is away from traffic.
4. Where required by the serving utility, service breakers shall be installed above meter socket in a separate rain-tight enclosure.
5. See **Standard Plan J-60.05** for grounding details.
6. See Breaker Schedule in Contract for breaker and contactor sizes.
7. See **Standard Plan J-60.13** for mounting details.

Bailey, Ted
May 28 2015 10:06 AM

SERVICE CABINET TYPE A (0 - 60 AMP TYPE 120 VOLT SINGLE PHASE) STANDARD PLAN J-10.16-00

SHEET 1 OF 2 SHEETS

APPROVED FOR PUBLICATION
Bakotich, Pasco
Jun 3 2015 4:16 PM
STATE DESIGN ENGINEER
Washington State Department of Transportation

DRAWN BY: COLBY FLETCHER

NOTES (CONTINUED)

8. See **Standard Specification 9-29.24** (Service Cabinets).
9. Hinges shall have stainless steel or brass pins.
10. Cabinet shall be rated NEMA 3R.
11. The metering equipment door shall be pad-lockable. Each door shall be gasketed. See **Standard Plan J-10.20** for door hinge details.
12. The following equipment within the service enclosure shall have an appropriately engraved phenolic name plate attached with screws or rivets:
    Key Numbers 2, 3, 4, 6, 7, and 8.
    Key Number 4 name plate shall read as follows:
    "PHOTOCELL BYPASS TEST ON" AND "PHOTOCELL TEST OFF - AUTOMATIC."
    See service cabinet detail.
13. Dimensions shown are minimum and shall be adjusted to accommodate the various sizes of equipment installed.
14. All busswork shall be high grade copper and shall equal or exceed the main breaker rating. All breakers shall bolt on to the busswork. Jumpering of breakers shall not be allowed. Busswork shall accommodate all future equipment as shown in the Breaker Schedule.
15. The photoelectric control unit shall be centered in the photoelectric control enclosure to permit 360 degree rotation of the photoelectric control unit without removal of the photoelectric control unit or the photoelectric control enclosure.
16. All internal wire runs shall be identified with "TO - FROM" coded tags labeled with the code letters and/or numbers shown on the Schedules. Approved PVC or polyolefin wire marking sleeves shall be used.
17. All nuts, bolts, screws, and washers used for mounting the photoelectric control enclosure, conduit body covers, and junction box cover shall be **ASTM F593** or **A193 Type 304** or **Type 316** stainless steel.
18. A 1% tolerance is allowed for all dimensions.
19. Slotted steel channel and mounting hardware components shall be stainless steel. Conduit clamps shall be hot-dip galvanized steel or stainless steel.
20. Install conduit couplings on all conduits.
21. When using alternate door hinge, remove hinge pin prior to welding the hinge to the cabinet and prior to hot-dip galvanizing. After galvanizing, replace pin with a brass pin or solder in place. See **Standard Plan J-10.20** for alternate door hinge details.
22. The photoelectric control enclosure shall be fabricated from 5/8" (in) expanded steel mesh with welded seams and mounting flanges and shall be hot-dip galvanized after fabrication. Type 5052 - H32 aluminum with 5/8" (in) x 5/8" (in) expanded steel mesh may be used as an alternative material. See **Standard Plan J-10.20** for enclosure mounting details.
23. See Contract for Breaker Schedule.

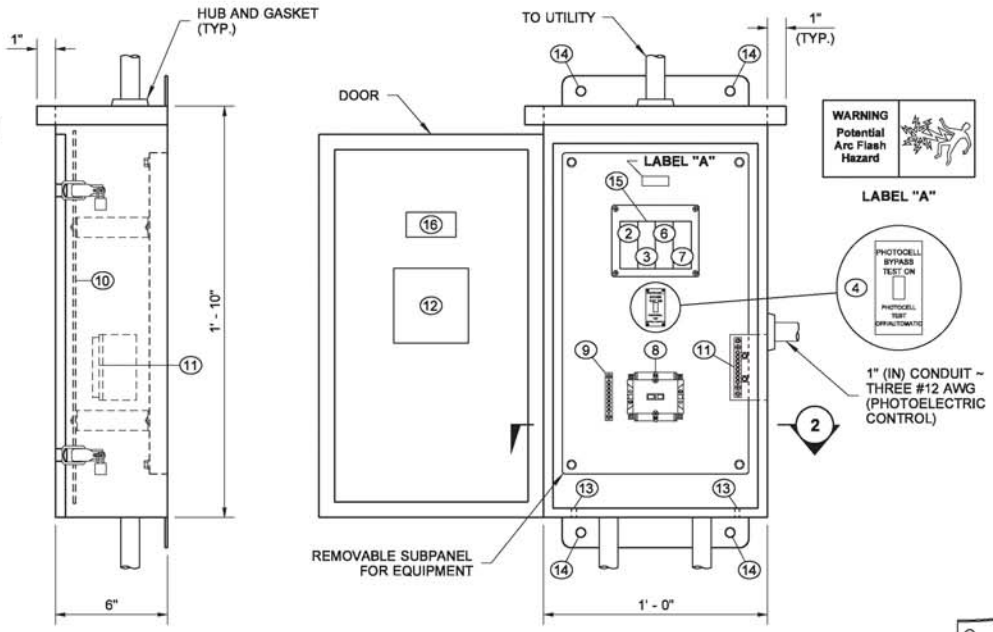

TYPE A SERVICE CABINET
(60 AMP TYPE 120 1ø SERVICE CABINET)

KEY

1. METER BASE PER SERVING UTILITY REQUIREMENTS ~ AS A MINIMUM, THE METER BASE SHALL BE SAFETY SOCKET BOX WITH FACTORY INSTALLED TEST BYPASS FACILITY THAT MEETS THE REQUIREMENTS OF **EUSERC DRAWING 304** ~ METER BASE ENCLOSURE SHALL BE FABRICATED FROM TYPE 304 STAINLESS STEEL
2. MAIN BREAKER (SPST - SIZE PER BREAKER SCHEDULE)
3. PHOTOELECTRIC CONTROL BREAKER (SPST ~ 15 AMP ~ 120/240 VOLT)
4. TEST SWITCH (SPDT ~ SNAP ACTION ~ POSITIVE CLOSE ~ 15 AMP ~ 120/277 VOLT ~ "T" RATED)
5. PHOTOELECTRIC CONTROL UNIT ~ SEE **STANDARD SPECIFICATION 9-29.11(2)**
6. BRANCH BREAKER ~ SEE BREAKER SCHEDULE (SPST ~ 120/240 VOLT)
7. SPARE BRANCH BREAKER (SPST ~ 20 AMP ~ 120/240 VOLT)
8. CONTACTOR ~ SEE BREAKER SCHEDULE
9. ISOLATED NEUTRAL BUSS ~ 8 LUG COPPER
10. DEAD FRONT ~ INSTALL SCREWS WITH WASHERS AT EACH CORNER ~ DEAD FRONT PANEL BOLTS SHALL NOT EXTEND INTO VERTICAL LIMITS OF THE BREAKER ARRAY(S)
11. CABINET MAIN BONDING JUMPER ASSEMBLY ~ BUSS SHALL BE 8 LUG TINNED COPPER ~ SEE **STANDARD PLAN J-10.20** FOR CABINET MAIN BONDING JUMPER ASSEMBLY DETAILS
12. METAL WIRING DIAGRAM HOLDER
13. 1/4" (IN) DIAMETER DRAIN HOLE ~ DRILL BEFORE GALVANIZING
14. MOUNTING HOLE ~ SEE **STANDARD PLAN J-10.20** FOR MOUNTING DETAILS
15. 4-CIRCUIT PANEL BOARD ~ MINIMUM SIZE WITH BACK-FED MAIN BREAKER
16. LABEL CABINET WITH BUSSWORK RATING

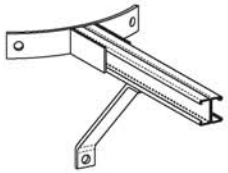

PERSPECTIVE VIEW

ALTERNATE STANDOFF BRACKET DETAIL
(SEE NOTE 2)

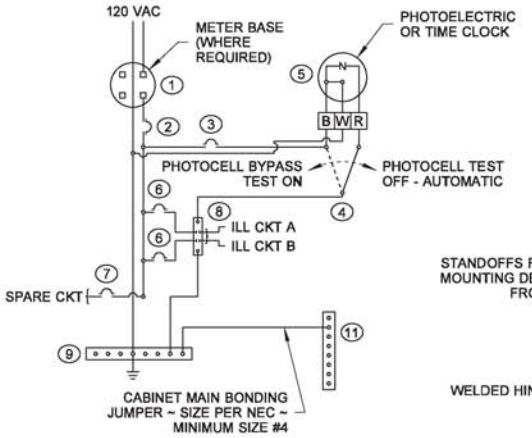

TYPE A WIRING DIAGRAM ~ 120 VOLT

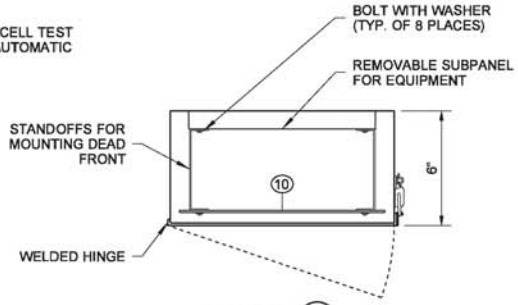

SECTION 2

Bailey, Ted
May 28 2015 10:06 AM

SERVICE CABINET TYPE A
(0 - 60 AMP TYPE 120 VOLT SINGLE PHASE)
STANDARD PLAN J-10.16-00

SHEET 2 OF 2 SHEETS

APPROVED FOR PUBLICATION
Bakotich, Pasco
Jun 3 2015 4:17 PM
STATE DESIGN ENGINEER
Washington State Department of Transportation

DRAWN BY: COLBY FLETCHER

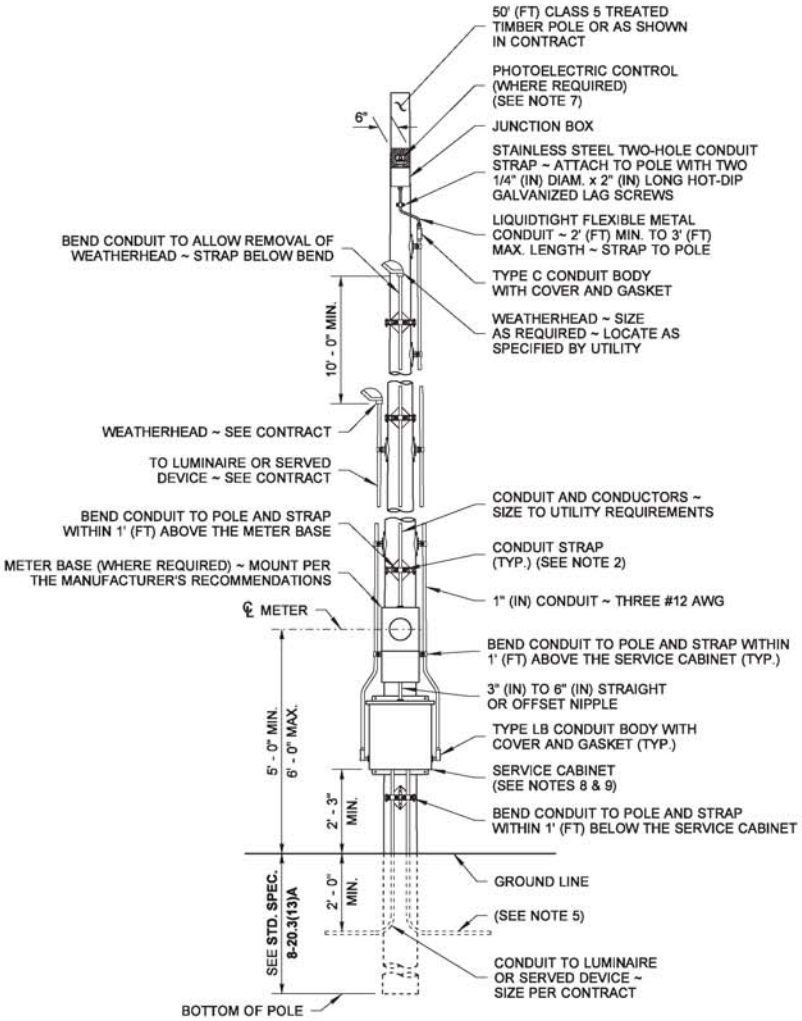

TYPE B SERVICE ~ 120/240 VOLT

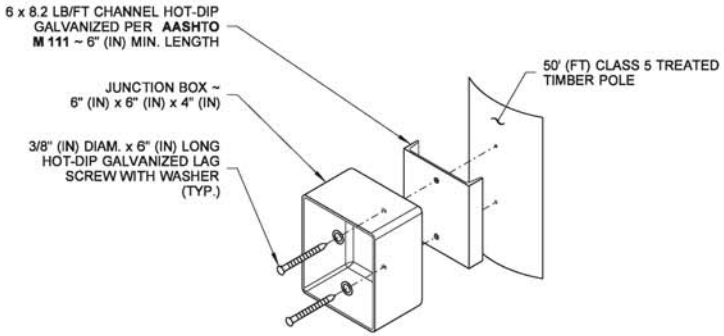

JUNCTION BOX MOUNTING DETAIL

ISOMETRIC VIEW

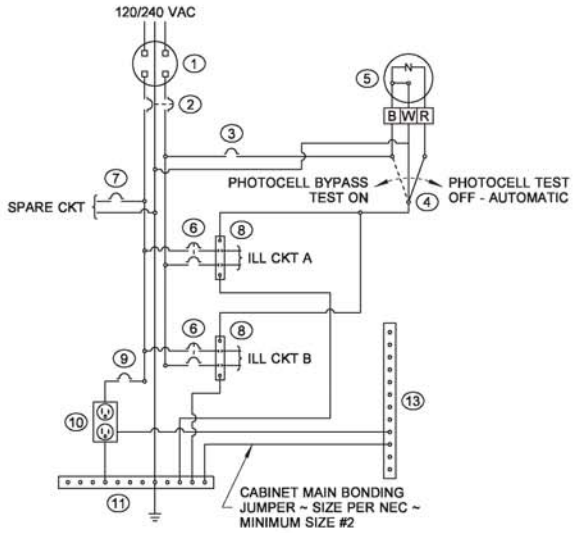

TYPE B WIRING DIAGRAM ~ 240 VOLT

NOTES

1. Metering arrangements may vary with different serving utilities. The Contractor shall verify the requirements of the utility prior to installing the service equipment.
2. All service pole conduits shall be secured to the pole with two-hole conduit straps spaced at 5' (ft) maximum centers. See **Standard Plans J-60.13 and J-60.14** for steel channel support and mounting details. Where required by the Utility, an alternative-use hot-dip galvanized standoff bracket may be used. See **Standard Plan J-10.16** for ALTERNATE STANDOFF BRACKET DETAIL.
3. All risers and service equipment shall be installed on side of pole that is away from traffic.
4. Where required by the serving utility, service breakers shall be installed above meter socket in a separate rain-tight enclosure.
5. See **Standard Plan J-60.05** for grounding details.
6. See Breaker Schedule in Contract for breaker and contactor sizes.
7. See **Standard Plan J-10.16** for photoelectric control details.
8. See **Standard Plan J-10.16** for service cabinet mounting details.

Bailey, Ted
May 28 2015 10:07 AM

SERVICE CABINET TYPE B (0 - 60 AMP TYPE 120/240 VOLT SINGLE PHASE) STANDARD PLAN J-10.17-00

SHEET 1 OF 2 SHEETS

APPROVED FOR PUBLICATION
Bakotich, Pasco
Jun 3 2015 4:19 PM
STATE DESIGN ENGINEER
Washington State Department of Transportation

DRAWN BY: COLBY FLETCHER

NOTES (CONTINUED)

9. See **Standard Specification 9-29.24** (Service Cabinets).
10. Hinges shall have stainless steel or brass pins.
11. Cabinet shall be rated NEMA 3R and shall include two rain-tight vents.
12. The metering equipment door shall be pad-lockable. Each door shall be gasketed. See **Standard Plan J-10.20** for door hinge details.
13. The following equipment within the service enclosure shall have an appropriately engraved phenolic name plate attached with screws or rivets:
    Key Numbers 2, 3, 4, 6, 7, 8, and 9.
    Key Number 4 name plate shall read as follows:
    "PHOTOCELL BYPASS TEST ON" AND "PHOTOCELL TEST OFF - AUTOMATIC."
    See service cabinet detail.
14. Metering arrangements vary with serving utilities. The Contractor shall verify the serving utility's requirements prior to fabrication and installation of the service equipment.
15. Dimensions shown are minimum and shall be adjusted to accommodate the various sizes of equipment installed.
16. All busswork shall be high-grade copper and shall equal or exceed the main breaker rating. All breakers shall bolt on to the busswork. Jumpering of breakers shall not be allowed. Busswork shall accommodate all future equipment as shown in the Breaker Schedule.
17. The photoelectric control unit shall be centered in the photoelectric control enclosure to permit 360 degree rotation of the photoelectric control unit without removal of the photoelectric control unit or the photoelectric control enclosure.
18. All internal wire runs shall be identified with "TO - FROM" coded tags labeled with the code letters and/or numbers shown on the Schedules. Approved PVC or polyolefin wire marking sleeves shall be used.
19. All nuts, bolts, screws, and washers used for mounting the photoelectric control enclosure, conduit body covers, and junction box cover shall be **ASTM F593** or **A193 Type 304** or **Type 316** stainless steel.
20. A 1% tolerance is allowed for all dimensions.
21. Slotted steel channel and mounting hardware components shall be stainless steel. Conduit clamps shall be hot-dip galvanized steel or stainless steel.
22. Install conduit couplings on all conduits.
23. When using alternate door hinge, remove hinge pin prior to welding the hinge to the cabinet and prior to hot-dip galvanizing. After galvanizing, replace pin with a brass pin or solder in place. See **Standard Plan J-10.20** for alternate door hinge details.
24. The photoelectric control enclosure shall be fabricated from 5/8" (in) expanded steel mesh with welded seams and mounting flanges and shall be hot-dip galvanized after fabrication. Type 5052 - H32 aluminum with 5/8" (in) x 5/8" (in) expanded steel mesh may be used as an alternative material. See **Standard Plan J-10.20** for enclosure mounting details.
25. See Contract for Breaker Schedule.

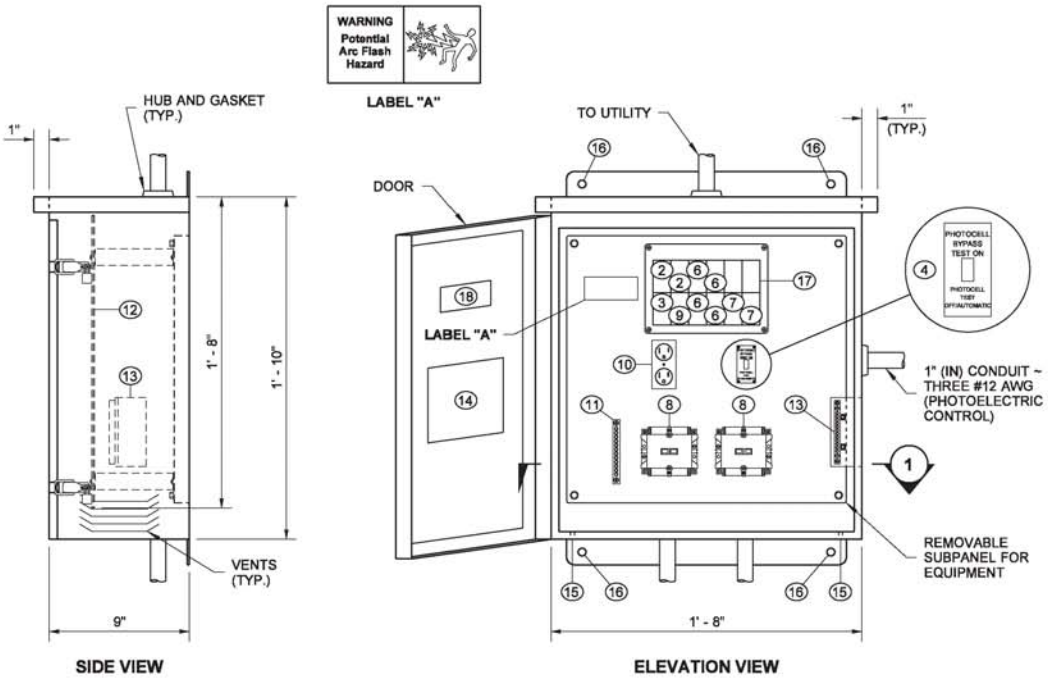

TYPE B SERVICE CABINET
(200 AMP TYPE 120/240 1ø SERVICE CABINET)

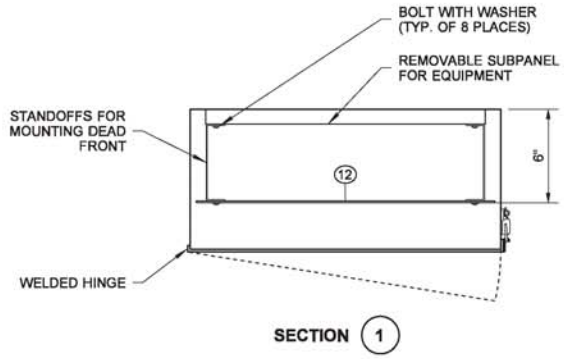

KEY

1. METER BASE PER SERVING UTILITY REQUIREMENTS ~ AS A MINIMUM, THE METER BASE SHALL BE SAFETY SOCKET BOX WITH FACTORY-INSTALLED TEST BYPASS FACILITY THAT MEETS THE REQUIREMENTS OF **EUSERC DRAWING 304** ~ METER BASE ENCLOSURE SHALL BE FABRICATED FROM TYPE 304 STAINLESS STEEL
2. MAIN BREAKER (DPST ~ SIZE PER BREAKER SCHEDULE)
3. PHOTOELECTRIC CONTROL BREAKER (SPST ~ 15 AMP ~ 120/240 VOLT)
4. TEST SWITCH (SPDT ~ SNAP ACTION ~ POSITIVE CLOSE ~ 15 AMP ~ 120/277 VOLT ~ "T" RATED)
5. PHOTOELECTRIC CONTROL UNIT ~ SEE **STANDARD SPECIFICATION 9-29.11(2)**
6. BRANCH BREAKER ~ SEE BREAKER SCHEDULE (DPST ~ 120/240 VOLT)
7. SPARE BREAKER ~ SEE BREAKER SCHEDULE (SPST ~ 20 AMP ~ 120/240 VOLT)
8. CONTACTOR ~ SEE BREAKER SCHEDULE
9. RECEPTACLE BREAKER (SPST ~ 20 AMP ~ 120/240 VOLT)
10. RECEPTACLE ~ GROUNDED (GFCI ~ 20 AMP ~ 125 VOLT)
11. ISOLATED NEUTRAL BUSS ~ 12 LUG COPPER
12. DEAD FRONT ~ INSTALL SCREWS WITH WASHERS AT EACH CORNER ~ DEAD FRONT PANEL BOLTS SHALL NOT EXTEND INTO VERTICAL LIMITS OF THE BREAKER ARRAY(S)
13. CABINET MAIN BONDING JUMPER ASSEMBLY ~ BUSS SHALL BE 12 LUG TINNED COPPER ~ SEE **STANDARD PLAN J-10.20** FOR CABINET MAIN BONDING JUMPER ASSEMBLY DETAILS
14. METAL WIRING DIAGRAM HOLDER
15. 1/4" (IN) DIAMETER DRAIN HOLE ~ DRILL BEFORE GALVANIZING
16. MOUNTING HOLE ~ SEE **STANDARD PLAN J-10.20** FOR MOUNTING DETAILS
17. 12-CIRCUIT PANEL BOARD ~ MINIMUM SIZE WITH BACK-FED MAIN BREAKER
18. LABEL CABINET WITH BUSSWORK RATING

THEODORE JOSEPH BAILEY
STATE OF WASHINGTON
39820
REGISTERED PROFESSIONAL ENGINEER

Bailey, Ted
May 28 2015 10:07 AM

SERVICE CABINET TYPE B
(0 - 60 AMP TYPE 120/240 VOLT SINGLE PHASE)
STANDARD PLAN J-10.17-00

SHEET 2 OF 2 SHEETS

APPROVED FOR PUBLICATION
Bakotich, Pasco
Jun 3 2015 4:20 PM
STATE DESIGN ENGINEER
Washington State Department of Transportation

DRAWN BY: COLBY FLETCHER

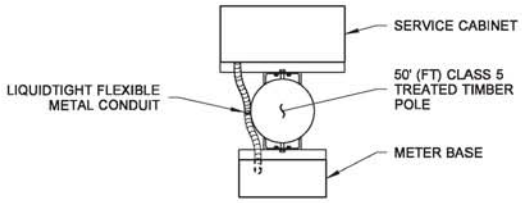

SECTION 1

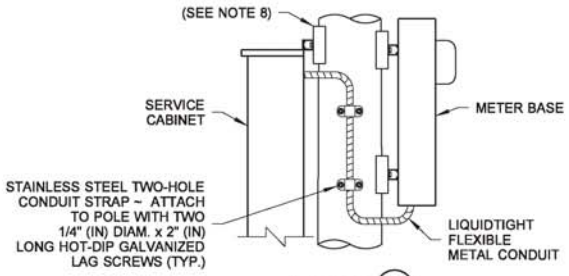

SECTION 2

NOTES

1. Metering arrangements may vary with different serving utilities. The Contractor shall verify the requirements of the utility prior to installing the service equipment.
2. All service pole conduits shall be secured to the pole with two-hole conduit straps spaced at 5' (ft) maximum centers. See **Standard Plans J-60.13 and J-60.14** for steel channel support and mounting details. Where required by the Utility, an alternative-use hot-dip galvanized standoff bracket may be used. See **Standard Plan J-10.16** for ALTERNATE STANDOFF BRACKET DETAIL.
3. All risers and service equipment shall be installed on side of pole that is away from traffic.
4. Where required by the serving utility, service breakers shall be installed above meter socket in a separate rain-tight enclosure.
5. See **Standard Plan J-60.05** for grounding details.
6. See Breaker Schedule in Contract for breaker and contactor sizes.
7. See **Standard Plan J-10.16** for photolectric control details.
8. See **Standard Plan J-10.16** for service cabinet mounting details.

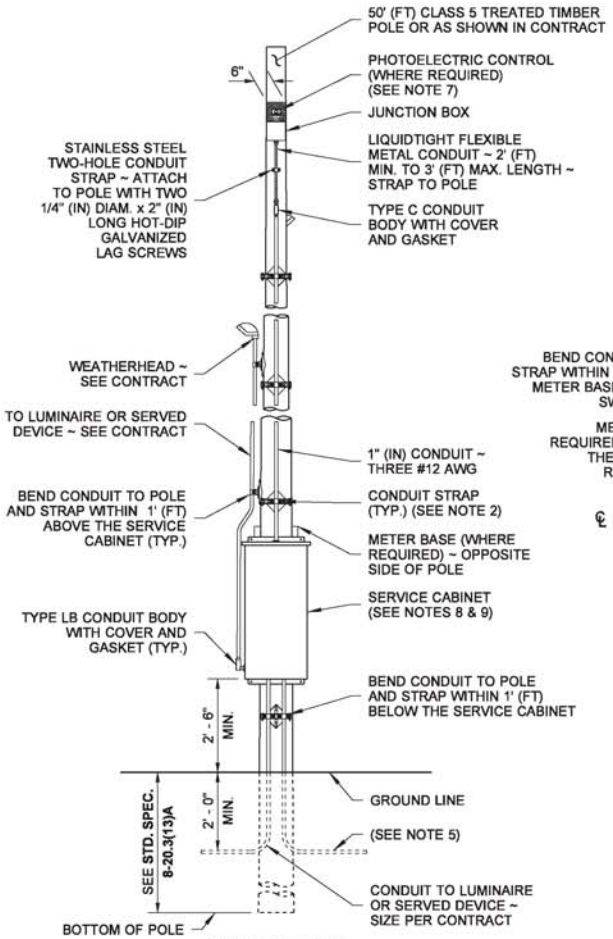

FRONT OF POLE

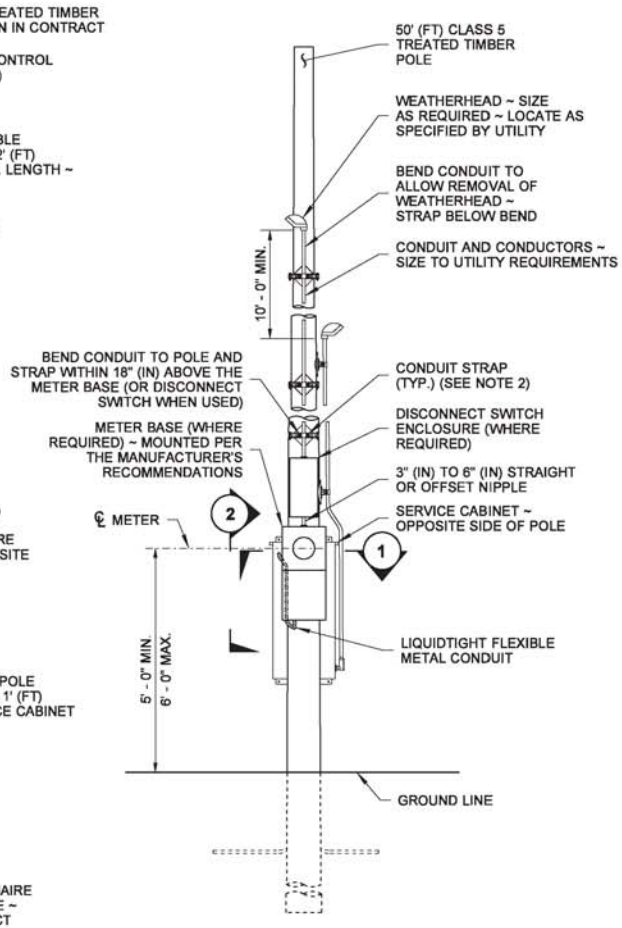

BACK OF POLE

TYPE C SERVICE ~ 480 VOLT

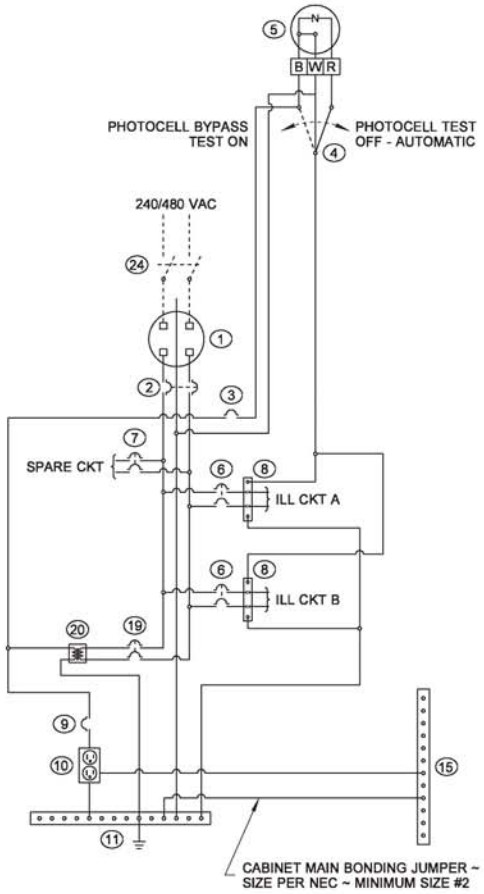

TYPE C WIRING DIAGRAM ~ 480 VOLT

DRAWN BY: COLBY FLETCHER

Bailey, Ted
May 28 2015 10:08 AM

SERVICE CABINET TYPE C (0 - 60 AMP TYPE 240/480 VOLT SINGLE PHASE) STANDARD PLAN J-10.18-00

SHEET 1 OF 2 SHEETS

APPROVED FOR PUBLICATION
Bakotich, Pasco
Jun 3 2015 4:20 PM
STATE DESIGN ENGINEER
Washington State Department of Transportation

NOTES (CONTINUED)

9. See **Standard Specification 9-29.24** (Service Cabinets).
10. Hinges shall have stainless steel or brass pins.
11. Cabinet shall be rated NEMA 3R and shall include two rain-tight vents.
12. The metering equipment door shall be pad-lockable. Each door shall be gasketed. See **Standard Plan J-10.20** for door hinge details. Concealed heavy-duty stainless steel lift-off hinges are allowed as an alternative. Upper left door shall have three hinges, lower left door shall have two hinges, and right door shall have three hinges. All doors shall have a two-position door stop assembly.
13. The following equipment within the service enclosure shall have an appropriately engraved phenolic name plate attached with screws or rivets:
    Key Numbers 2, 3, 4, 6, 7, 8, and 9.
    Key Number 4 name plate shall read as follows:
    "PHOTOCELL BYPASS TEST ON" AND "PHOTOCELL TEST OFF - AUTOMATIC."
    See service cabinet detail.
14. Dimensions shown are minimum and shall be adjusted to accommodate the various sizes of equipment installed.
15. All busswork shall be high-grade copper and shall equal or exceed the main breaker rating. All breakers shall bolt on to the busswork. Jumpering of breakers shall not be allowed. Busswork shall accommodate all future equipment as shown in the Breaker Schedule.
16. The photoelectric control unit shall be centered in the photoelectric control enclosure to permit 360 degree rotation of the photoelectric control unit without removal of the photoelectric control unit or the photoelectric control enclosure.
17. All internal wire runs shall be identified with "TO - FROM" coded tags labeled with the code letters and/or numbers shown on the Schedules. Approved PVC or polyolefin wire marking sleeves shall be used.
18. All nuts, bolts, screws, and washers used for mounting the photoelectric control enclosure, conduit body covers, and junction box cover shall be **ASTM F593** or **A193 Type 304** or **Type 316** stainless steel.
19. A 1% tolerance is allowed for all dimensions.
20. See Contract for Breaker Schedule.
21. Install conduit couplings on all conduits.
22. The photoelectric control enclosure shall be fabricated from 5/8" (in) expanded steel mesh with welded seams and mounting flanges and shall be hot-dip galvanized after fabrication. Type 5052 - H32 aluminum with 5/8" (in) x 5/8" (in) expanded steel mesh may be used as an alternative material. See **Standard Plan J-10.20** for enclosure mounting details.
23. Slotted steel channel and mounting hardware components shall be stainless steel. Conduit clamps shall be hot-dip galvanized steel or stainless steel.
24. When using alternate door hinge, remove hinge pin prior to welding the hinge to the cabinet and prior to hot-dip galvanizing. After galvanizing, replace pin with a brass pin or solder in place. See **Standard Plan J-10.20** for alternate door hinge details.

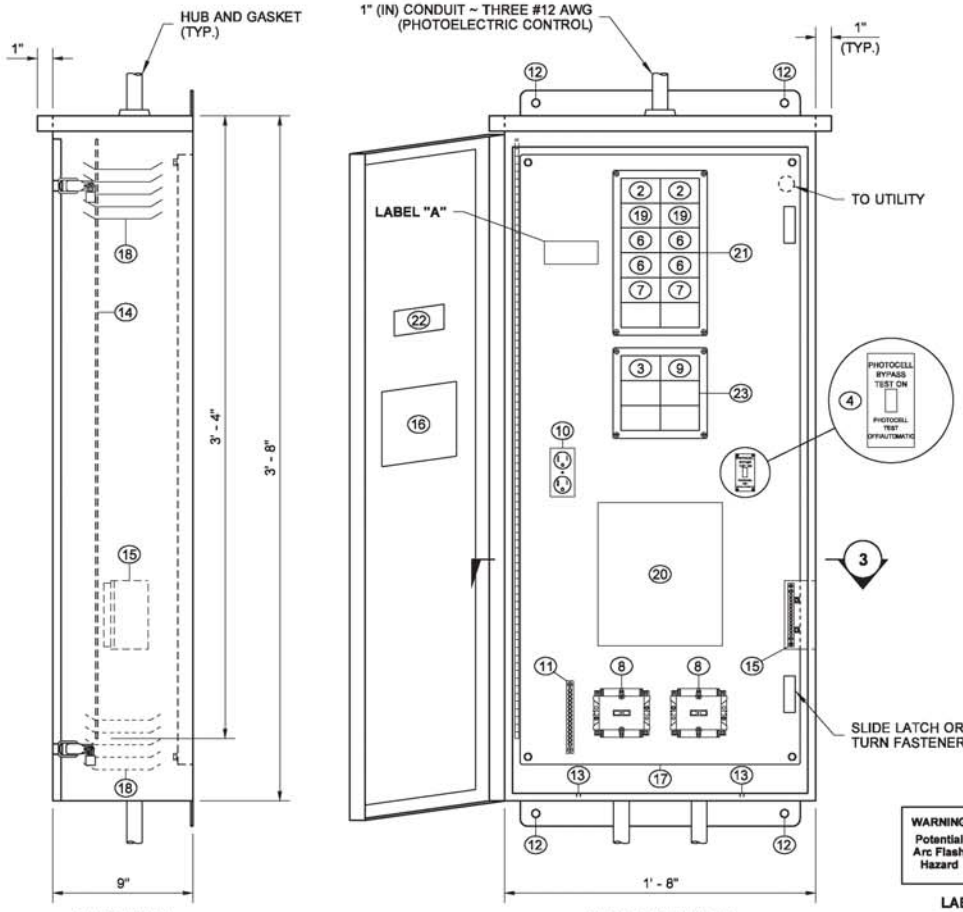

SIDE VIEW

ELEVATION VIEW
(⑭ NOT SHOWN FOR CLARITY)

TYPE C SERVICE CABINET
(60 AMP TYPE 120 1ø SERVICE CABINET)

LABEL "A"

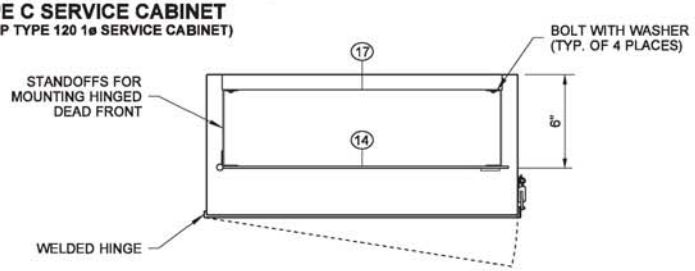

SECTION 3

KEY

1. METER BASE PER SERVING UTILITY REQUIREMENTS ~ AS A MINIMUM, THE METER BASE SHALL BE SAFETY SOCKET BOX WITH FACTORY-INSTALLED TEST BYPASS FACILITY THAT MEETS THE REQUIREMENTS OF **EUSERC DRAWING 304** ~ METER BASE ENCLOSURE SHALL BE FABRICATED FROM TYPE 304 STAINLESS STEEL
2. MAIN BREAKER (DPST ~ SIZE PER BREAKER SCHEDULE)
3. PHOTOELECTRIC CONTROL BREAKER (SPST ~ 15 AMP ~ 120/240 VOLT)
4. TEST SWITCH (SPDT ~ SNAP ACTION ~ POSITIVE CLOSE ~ 15 AMP ~ 120/277 VOLT ~ "T" RATED)
5. PHOTOELECTRIC CONTROL UNIT ~ SEE **STANDARD SPECIFICATION 9-29.11(2)**
6. BRANCH BREAKER (DPST ~ SIZE PER BREAKER SCHEDULE)
7. SPARE BREAKER ~ SEE BREAKER SCHEDULE (DPST ~ 20 AMP ~ 240/480 VOLT)
8. CONTACTOR ~ SEE BREAKER SCHEDULE
9. RECEPTACLE BREAKER (SPST ~ 20 AMP ~ 120/240 VOLT)
10. RECEPTACLE ~ GROUNDED (GFCI ~ 20 AMP ~ 125 VOLT)
11. ISOLATED NEUTRAL BUSS ~ 14 LUG COPPER
12. MOUNTING HOLE ~ SEE **STANDARD PLAN J-10.20** FOR MOUNTING DETAILS
13. 1/4" (IN) DIAMETER DRAIN HOLE ~ DRILL BEFORE GALVANIZING
14. HINGED DEAD FRONT WITH 1/4 TURN FASTENERS OR SLIDE LATCH ~ DEAD FRONT PANEL BOLTS SHALL NOT EXTEND INTO VERTICAL LIMITS OF THE BREAKER ARRAY(S)
15. CABINET MAIN BONDING JUMPER ASSEMBLY ~ BUSS SHALL BE 12 LUG TINNED COPPER ~ SEE **STANDARD PLAN J-10.20** FOR CABINET MAIN BONDING JUMPER ASSEMBLY DETAILS
16. METAL WIRING DIAGRAM HOLDER
17. REMOVABLE SUBPANEL FOR EQUIPMENT
18. SCREENED VENTS ~ TWO REQUIRED (ONE EACH SIDE) ~ LOUVERED PLATES
19. TRANSFORMER BREAKER (DPST ~ 15 AMP ~ 480 VOLT)
20. DRY TRANSFORMER (480/120 VOLT) ~ 3 KVA ~ COPPER BUSSED AND COPPER WOUND
21. 12-CIRCUIT PANEL BOARD ~ MINIMUM SIZE WITH MAIN BREAKER
22. LABEL CABINET WITH BUSSWORK RATING
23. 6-CIRCUIT PANEL BOARD ~ MINIMUM SIZE
24. UTILITY DISCONNECT SWITCH ENCLOSURE WITH COVER ~ OMIT IF UTILITY DOES NOT REQUIRE THE DISCONNECT SWITCH

Bailey, Ted
May 28 2015 10:09 AM

SERVICE CABINET TYPE C (0 - 60 AMP TYPE 240/480 VOLT SINGLE PHASE) STANDARD PLAN J-10.18-00

SHEET 2 OF 2 SHEETS

APPROVED FOR PUBLICATION
Bakotich, Pasco
Jun 3 2015 4:20 PM
STATE DESIGN ENGINEER
Washington State Department of Transportation

DRAWN BY: COLBY FLETCHER

NOTES (200 AMP TYPE 120/240 1ø SERVICE CABINET)

1. See **Standard Specification 9-29.24** (Service Cabinets).
2. Hinges shall have stainless steel or brass pins.
3. Cabinets shall be rated NEMA 3R and shall include two rain-tight vents.
4. Metering equipment door shall be pad-lockable. Each door shall be gasketed. Install Best CX Construction Core on right side door. See Door Hinge Detail.
5. The following equipment within the service enclosure shall have an appropriately engraved phenolic name plate attached with screws or rivets:
   Key Numbers 2, 3, 4, 6, 7, 8, 9, & 16
   Key Number 4 name plate shall read:
   "PHOTOCELL BYPASS TEST ON" and "PHOTOCELL TEST OFF-AUTOMATIC". See Service Cabinet Detail.
6. Metering arrangements vary with different serving Utilities. The Utility may require meter base mounting in the enclosure, on the side, or on the back of the enclosure. The Utility may require the dimension between the door and the front of the safety socket box to be less than the 11" (in) shown in the Left Side - Safety Socket Box Mounting Detail. The Contractor shall verify the serving Utility's requirements prior to fabrication and installation of the service equipment.
7. Dimensions shown are minimum and shall be adjusted to accommodate the various sizes of equipment installed.
8. All busswork shall be high-grade copper and shall equal or exceed the main breaker rating. All breakers shall bolt onto the busswork. Jumpering of breakers shall not be allowed. Busswork shall accommodate all future equipment as shown in the breaker schedule.
9. The photocell unit shall be centered in the photocell enclosure to permit 360 degree rotation of the photocell without removal of the photocell unit or the photocell enclosure.
10. All internal wire runs shall be identified with "TO - FROM" coded tags labeled with the code letters and/or numbers shown on the schedules. Approved PVC or polyolefin wire marking sleeves shall be used.
11. All nuts, bolts, and washers used for mounting the photocell enclosure shall be stainless steel.
12. A 1% tolerance is allowed for all dimensions.
13. Slotted steel channel and mounting hardware components shall be stainless steel. Conduit clamps shall be hot-dipped galvanized steel or stainless steel.
14. The meter base portion of this service was designed to meet metering portion of **EUSERC Drawing 309** requirements.
15. When using alternate door hinge: Remove hinge pin prior to welding hinge to cabinet and prior to hot-dip galvanizing. After galvanizing, replace pin with brass pin and solder in place.
16. Verify the service utility stand-off dimension. Adjust the removable panel to the measurement provided by the Utility Company. After adjustment, cut off all-thread bolts so that no less than two and no more than three full threads extend past the face of the nuts.

DRAWN BY: COLBY FLETCHER

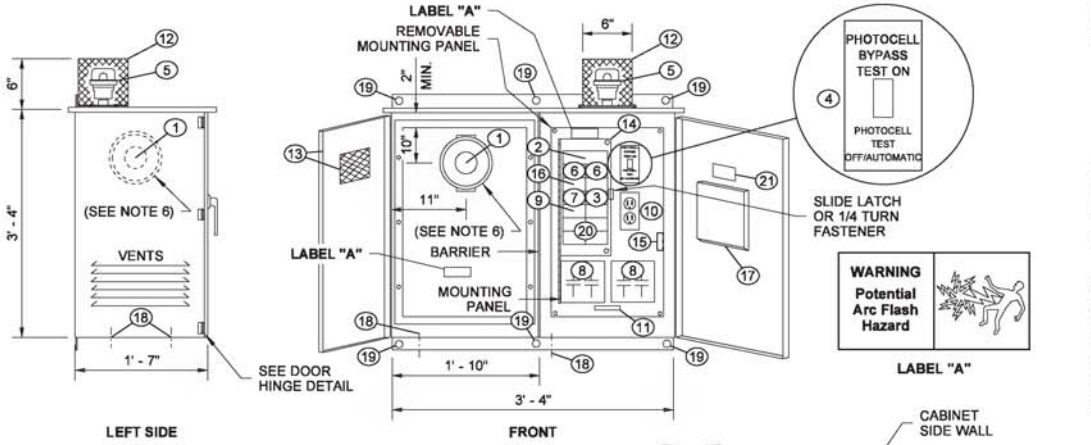

SERVICE CABINET DETAIL

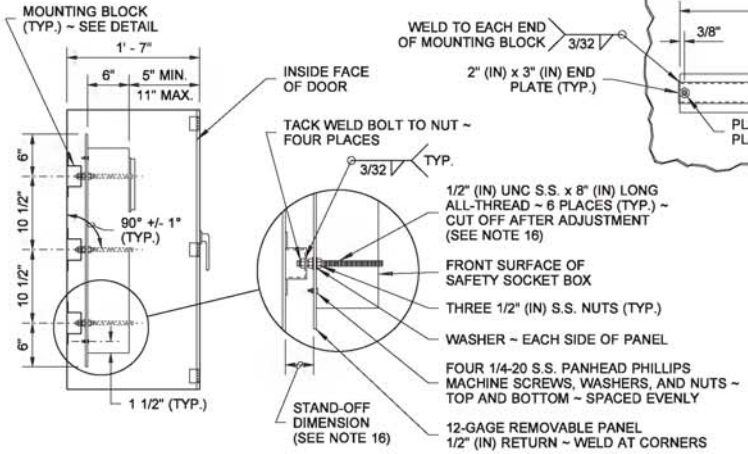

LEFT SIDE - SAFETY SOCKET BOX MOUNTING DETAIL

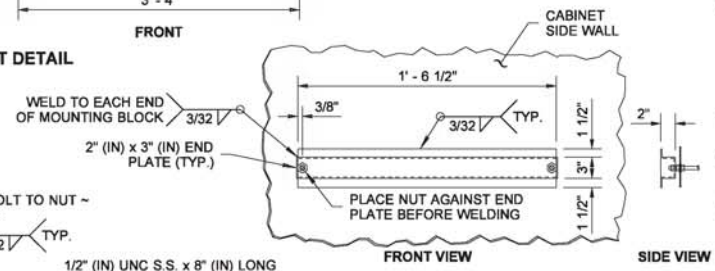

MOUNTING BLOCK DETAIL
12-GAGE ~ MATERIAL SHALL BE THE SAME AS CABINET MATERIAL

KEY

1. METER BASE PER SERVING UTILITY REQUIREMENTS ~ AS A MINIMUM, THE METER BASE SHALL BE SAFETY SOCKET BOX WITH FACTORY-INSTALLED TEST BYPASS FACILITY THAT MEETS THE REQUIREMENTS OF **EUSERC DRAWING 305** ~ WHEN THE UTILITY REQUIRES METER BASE TO BE MOUNTED ON THE SIDE OR BACK OF THE SERVICE CABINET, THE METER BASE ENCLOSURE SHALL BE FABRICATED FROM TYPE 304 STAINLESS STEEL.
2. MAIN BREAKER ~ DPST ~ SIZE PER BREAKER SCHEDULE
3. PHOTOCELL BREAKER ~ SPST 15 AMP - 120/240 VOLT
4. TEST SWITCH ~ SPDT SNAP ACTION - POSITIVE CLOSE 15 AMP - 120/277 VOLT - "T" RATED
5. PHOTOELECTRIC CONTROL ~ SEE **STANDARD SPECIFICATION 9-29.11(2)**
6. BRANCH BREAKER ~ SEE BREAKER SCHEDULE
7. SIGNAL BREAKER ~ SEE BREAKER SCHEDULE
8. CONTACTOR ~ SEE BREAKER SCHEDULE
9. RECEPTACLE BREAKER ~ SPST 20 AMP - 120/240 VOLT
10. RECEPTACLE (GROUNDED) ~ GFCI 20 AMP - 125 VOLT
11. ISOLATED NEUTRAL BUSS ~ 14 LUG COPPER
12. PHOTOCELL ENCLOSURE ~ ENCLOSURE TO BE FABRICATED FROM 5/8" (IN) EXPANDED STEEL MESH WITH WELDED SEAMS AND MOUNTING FLANGES ~ HOT-DIP GALVANIZED AFTER FABRICATION ~ TYPE 5052 - H32 ALUMINUM WITH 5/8" (IN) x 5/8" (IN) OPENINGS EQUIVALENT TO 5/8" (IN) EXPANDED STEEL MESH MAY BE USED AS ALTERNATIVE MATERIAL ~ SEE PHOTOCELL MOUNTING DETAIL
13. HINGED FRONT FACING DOOR WITH 4" (IN) x 4" (IN) MINIMUM POLISHED WIRE GLASS WINDOW
14. HINGED DEAD FRONT WITH 1/4 TURN FASTENERS OR SLIDE LATCH ~ DEAD FRONT PANEL BOLTS SHALL NOT EXTEND INTO VERTICAL LIMITS OF THE BREAKER ARRAY(S)
15. CABINET MAIN BONDING JUMPER ASSEMBLY ~ BUSS SHALL BE 14 LUG TINNED COPPER ~ SEE CABINET MAIN BONDING JUMPER ASSEMBLY DETAIL
16. SPARE BRANCH BREAKER ~ DPST 20 AMP - 120/240 VOLT
17. METAL WIRING DIAGRAM HOLDER
18. 1/4" (IN) DIAMETER DRAIN HOLE ~ DRILL BEFORE GALVANIZING
19. MOUNTING HOLE ~ SEE SERVICE CABINET MOUNTING DETAILS
20. 18-CIRCUIT PANEL BOARD ~ MINIMUM SIZE WITH SEPARATE MAIN BREAKER
21. LABEL CABINET WITH BUSSWORK RATING

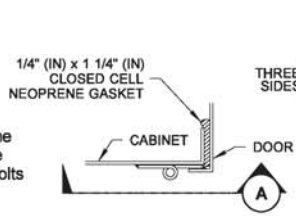

DOOR HINGE DETAIL
ALTERNATE TYPE B MODIFIED CABINET (SEE NOTE 15)

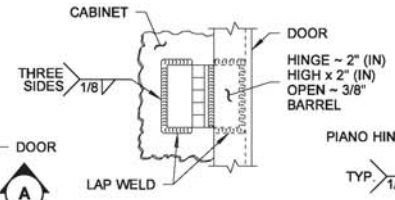

SECTION (A)

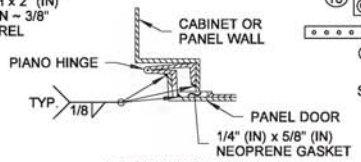

DOOR HINGE DETAIL

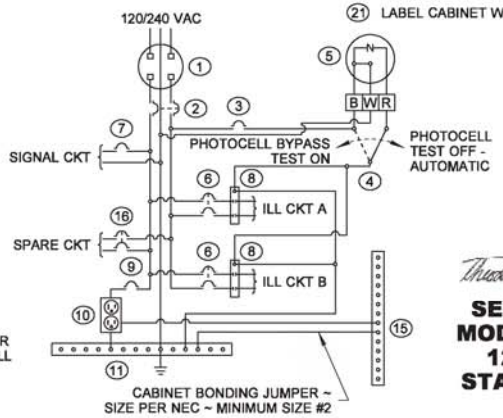

WIRING DIAGRAM

THEODORE JOSEPH BAILEY
STATE OF WASHINGTON
39820
REGISTERED
PROFESSIONAL ENGINEER

Bailey, Ted
May 28 2015 10:09 AM

SERVICE CABINET TYPE B MODIFIED (0 - 200 AMP TYPE 120/240 SINGLE PHASE) STANDARD PLAN J-10.20-00

SHEET 1 OF 2 SHEETS

APPROVED FOR PUBLICATION
Bakotich, Pasco
Jun 3 2015 4:21 PM
STATE DESIGN ENGINEER
Washington State Department of Transportation

DRAWN BY: COLBY FLETCHER

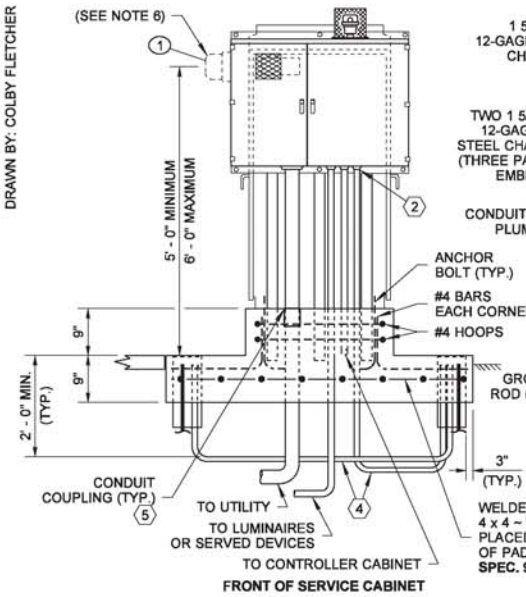

FRONT OF SERVICE CABINET

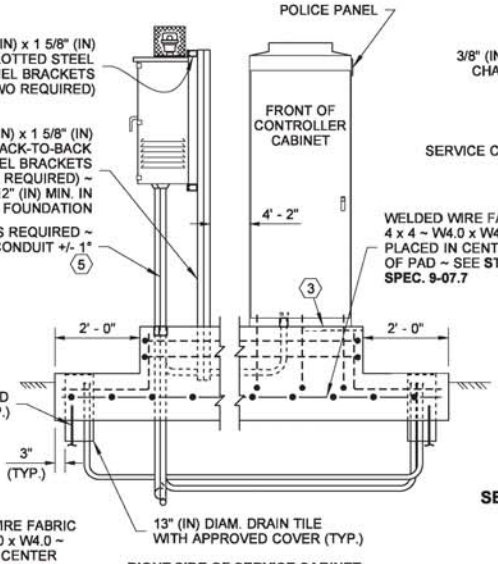

RIGHT SIDE OF SERVICE CABINET

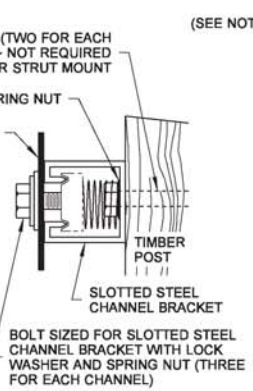

CABINET BRACKET MOUNTING DETAIL

SERVICE CABINET MOUNTING DETAILS

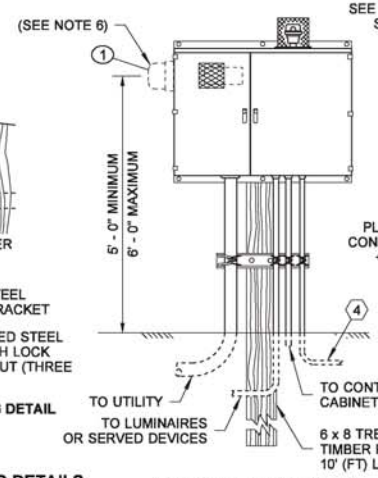

FRONT OF SERVICE CABINET

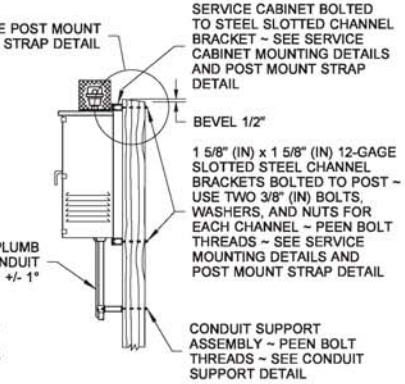

RIGHT SIDE OF SERVICE CABINET

POST MOUNT

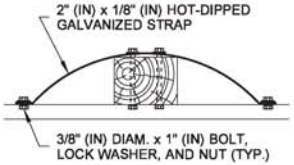

POST MOUNT STRAP DETAIL

STRUT MOUNT

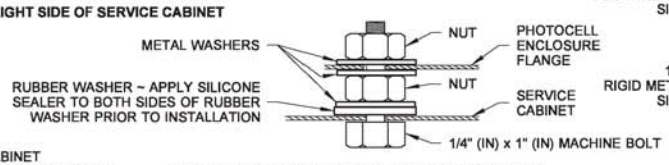

PHOTOCELL ENCLOSURE MOUNTING DETAIL

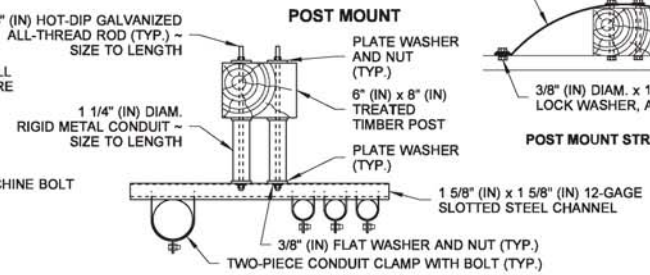

CONDUIT SUPPORT DETAIL

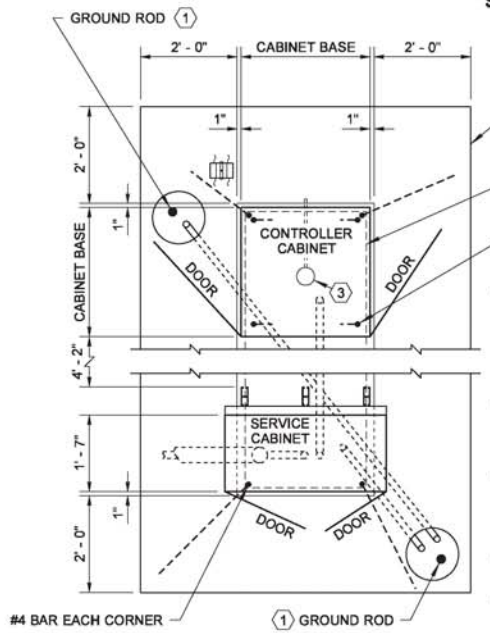

PLAN VIEW OF SERVICE CABINET

SEE CONTROLLER CABINET FOUNDATION DETAILS ON **STANDARD PLAN J-10.10** FOR CABINET DIMENSION TABLE AND DETAILS NOT SHOWN

TWO #4 HOOPS

ANCHOR BOLT (TYP.) ~ ONE REQUIRED AT EACH CORNER ~ SEE **STD. PLAN J-10.10**

1. DRIVE GROUND RODS BEFORE PLACING CONCRETE ~ MOVE ROD(S) AND DRAIN TILE(S) WITH COVER(S) AS REQUIRED TO ACHIEVE FULL GROUND PENETRATION ~ MAINTAIN A 6' (FT) MINIMUM CLEARANCE BETWEEN GROUND RODS AS DETAILED ON **STANDARD PLAN J-60.05**
2. ALL RMC CONDUITS PENETRATING CABINET SHALL BE TERMINATED WITH GROUNDING END BUSHING AND BONDED TO THE CABINET GROUNDING BUSS
3. 4" (IN) DIAM. x 1/2" (IN) DEEP SUMP. SLOPE FOUNDATION TOWARD SUMP ~ 3/8" (IN) DIAM. POLYETHYLENE OR COPPER DRAIN PIPE ~ SLOPE TO DRAIN OUTSIDE FOUNDATION ~ LOCATE DRAIN AWAY FROM ACCESS DOORS
4. TO SERVICE GROUND ~ PER **STANDARD PLAN J-60.05**
5. INSTALL CONDUIT COUPLINGS ON ALL CONDUITS ~ TOP OF CONDUIT COUPLINGS SHALL BE FLUSH WITH TOP OF CONCRETE ~ IF PVC CONDUITS ARE SPECIFIED,THE CONDUIT STUB AND END BELL BUSHING SHALL NOT BE GLUED TO THE COUPLING

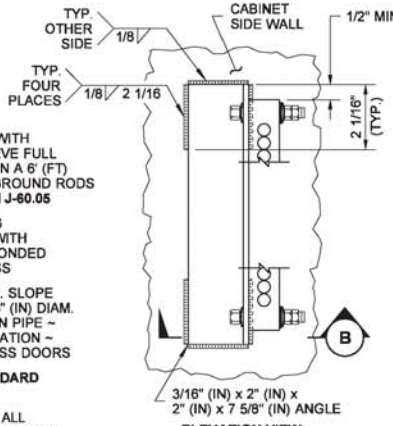

ELEVATION VIEW

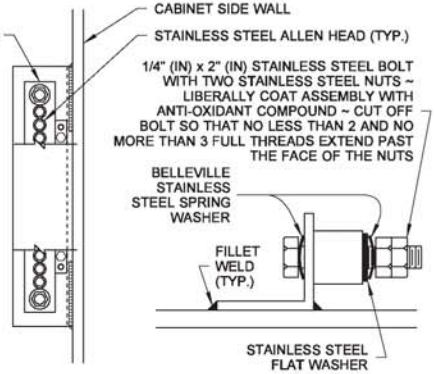

SIDE VIEW

SECTION B

CABINET MAIN BONDING JUMPER ASSEMBLY DETAIL

THEODORE JOSEPH BAILEY
STATE OF WASHINGTON
39820
REGISTERED PROFESSIONAL ENGINEER

Bailey, Ted
May 28 2015 10:10 AM

SERVICE CABINET TYPE B MODIFIED (0 - 200 AMP TYPE 120/240 SINGLE PHASE) STANDARD PLAN J-10.20-00

SHEET 2 OF 2 SHEETS

APPROVED FOR PUBLICATION
Bakotich, Pasco
Jun 3 2015 4:22 PM
STATE DESIGN ENGINEER
Washington State Department of Transportation

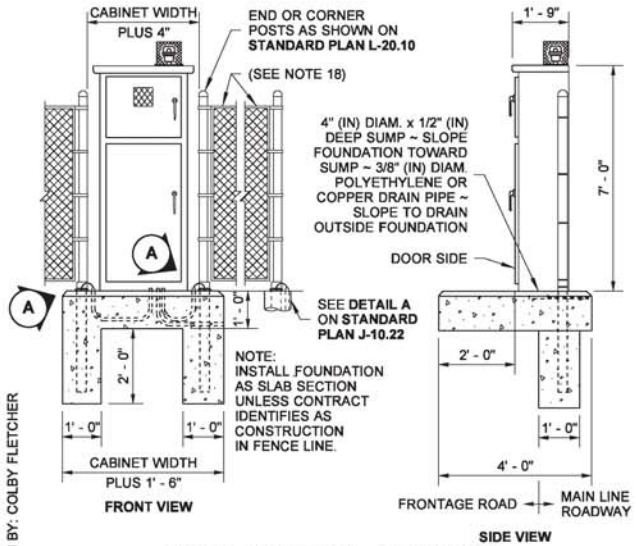

INSTALLATION DETAIL ~ IN FENCE LINE

DRAWN BY: COLBY FLETCHER

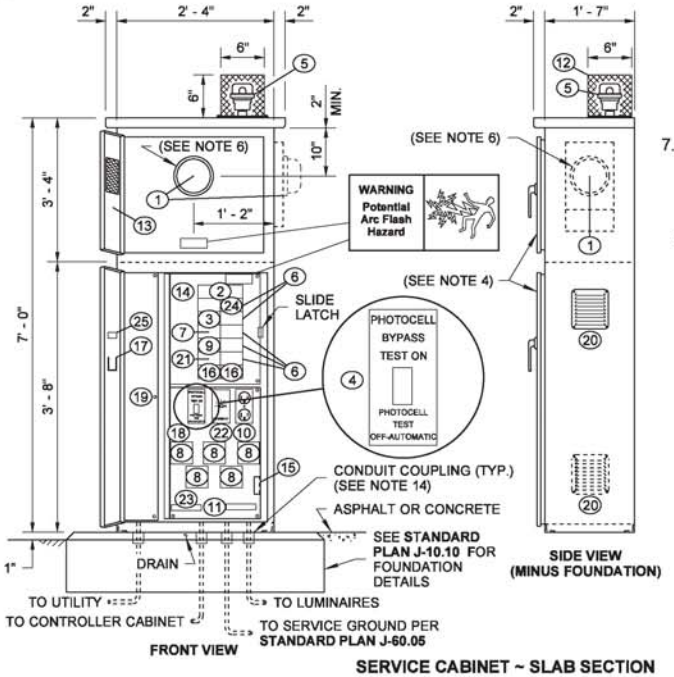

SERVICE CABINET ~ SLAB SECTION

NOTES (200 AMP TYPE 120/240 1ø SERVICE CABINET)

1. See **Standard Specification 9-29.24** (Service Cabinets).
2. Hinges shall have stainless steel or brass pins.
3. Cabinets shall be rated NEMA 3R and shall include two rain-tight vents.
4. Metering equipment door shall be pad-lockable. Each door shall be gasketed. Install Best CX Construction Core on bottom door. See Door Hinge Detail, **Standard Plan J-10.20**. Concealed heavy-duty stainless steel lift-off hinges are allowed as an alternative to Door Hinge Detail on **Standard Plan J-10.20**. Upper door shall have two hinges and lower door shall have three hinges. The lower door shall have a two-position door stop assembly.
5. The following equipment within the service enclosure shall have an appropriately engraved phenolic name plate attached with screws or rivets:
   Key Numbers 2, 3, 4, 6, 7, 8, 9, 16, & 21
   Key Number 4 name plate shall read: "PHOTOCELL BYPASS TEST ON" and "PHOTOCELL TEST OFF-AUTOMATIC."
   See Service Cabinet Detail.
6. Metering arrangements vary with different serving Utilities. The Utility may require meter base mounting in the enclosure, on the side, or on the back of the enclosure. The Utility may require the dimension between the door and the front of the safety socket box to be less than the 11" (in) shown in the Left Side - Safety Socket Box Mounting Detail. See **Standard Plan J-10.20** for Safety Socket Box Detail. The Contractor shall verify the serving Utility's requirements prior to fabrication and installation of the service equipment.
7. Dimensions shown are minimum and shall be adjusted to accommodate the various sizes of equipment installed.
8. All busswork shall be high-grade copper and shall equal or exceed the main breaker rating. All breakers shall bolt onto the busswork. Jumpering of breakers shall not be allowed. Busswork shall accommodate all future equipment as shown in the breaker schedule.
9. The photocell unit shall be centered in the photocell enclosure to permit 360 degree rotation of the photocell without removal of the photocell unit or the photocell enclosure.
10. All internal wire runs shall be identified with "TO - FROM" coded tags labeled with the code letters and/or numbers shown on the schedules. Approved PVC or polyolefin wire marking sleeves shall be used.
11. All nuts, bolts, and washers used for mounting the photocell enclosure shall be stainless steel.
12. A 1% tolerance is allowed for all dimensions.
13. The photocell circuit shall be installed in flex conduit within the meter compartment.
14. Install conduit couplings on all conduits. Top of conduit couplings shall be flush with the top of concrete foundation.
15. See Plans for Breaker Schedule.
16. Seal cabinet to foundation with a 1/2" (in) bead of silicone. Apply silicone to dry surface only.
17. The meter base portion of this service was designed to meet metering portion of **EUSERC Drawing 309** requirements.
18. When Service Cabinet is installed within right of way fence, see **Standard Plan J-10.22** for details.

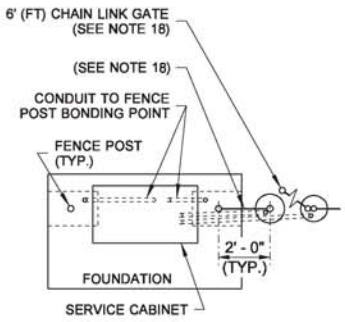

PLAN VIEW ~ IN FENCE LINE

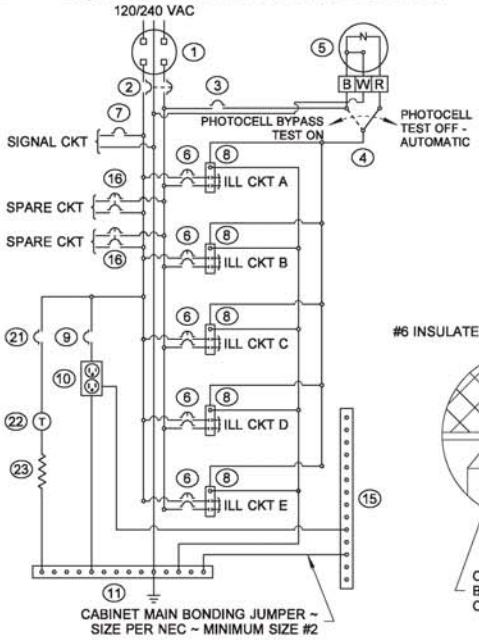

WIRING SCHEMATIC

KEY

1. METER BASE PER SERVING UTILITY REQUIREMENTS ~ AS A MINIMUM, THE METER BASE SHALL BE SAFETY SOCKET BOX WITH FACTORY-INSTALLED TEST BYPASS FACILITY THAT MEETS THE REQUIREMENTS OF **EUSERC DRAWING 305** ~ WHEN THE UTILITY REQUIRES METER BASE TO BE MOUNTED ON THE SIDE OR BACK OF THE SERVICE CABINET, THE METER BASE ENCLOSURE SHALL BE FABRICATED FROM TYPE 304 STAINLESS STEEL.
2. MAIN BREAKER ~ SEE BREAKER SCHEDULE
3. PHOTOCELL BREAKER ~ SPST 15 AMP - 120/240 VOLT
4. TEST SWITCH ~ SPDT SNAP ACTION - POSITIVE CLOSE 15 AMP - 120/277 VOLT - "T" RATED
5. PHOTOELECTRIC CONTROL ~ SEE **STANDARD SPECIFICATION 9-29.11(2)**
6. BRANCH BREAKER ~ SEE BREAKER SCHEDULE
7. SIGNAL BREAKER ~ SEE BREAKER SCHEDULE
8. CONTACTOR ~ SEE BREAKER SCHEDULE
9. RECEPTACLE BREAKER ~ SPST 20 AMP - 120/240 VOLT
10. RECEPTACLE (GROUNDED) ~ GFCI 20 AMP - 125 VOLT
11. ISOLATED NEUTRAL BUSS ~ 14 LUG COPPER
12. PHOTOCELL ENCLOSURE ~ ENCLOSURE TO BE FABRICATED FROM 5/8" (IN) EXPANDED STEEL MESH WITH WELDED SEAMS AND MOUNTING FLANGES ~ HOT-DIP GALVANIZED AFTER FABRICATION ~ TYPE 5052 - H32 ALUMINUM WITH 5/8" (IN) x 5/8" (IN) OPENINGS EQUIVALENT TO 5/8" (IN) EXPANDED STEEL MESH MAY BE USED AS ALTERNATIVE MATERIAL ~ SEE PHOTOCELL MOUNTING DETAIL ON **STANDARD PLAN J-10.20**
13. HINGED FRONT FACING DOOR WITH 4" (IN) x 4" (IN) MINIMUM POLISHED WIRE GLASS WINDOW
14. HINGED DEAD FRONT WITH 1/4 TURN FASTENERS OR SLIDE LATCH ~ DEAD FRONT PANEL BOLTS SHALL NOT EXTEND INTO VERTICAL LIMITS OF THE BREAKER ARRAY(S)
15. CABINET MAIN BONDING JUMPER ASSEMBLY ~ BUSS SHALL BE 14 LUG TINNED COPPER ~ SEE CABINET MAIN BONDING JUMPER ASSEMBLY DETAIL ON **STANDARD PLAN J-10.20**
16. SPARE BRANCH BREAKER ~ DPST 20 AMP - 120/240 VOLT
17. METAL WIRING DIAGRAM HOLDER
18. REMOVABLE EQUIPMENT MOUNTING PAN
19. 6" (IN) x 6" (IN) MIN. UNDERGROUND FEED ~ SERVICE WIREWAY (LEFT REAR CORNER)
20. SCREENED VENTS ~ TWO REQUIRED, 1 EACH SIDE ~ LOUVERED PLATES
21. HEATER BREAKER ~ SPST 15 AMP - 120/ 240VOLT
22. THERMOSTAT ~ 40° F CLOSURE - 3 DIFFERENTIAL
23. STRIP HEATER (100 WATT NOMINAL) WITH TERMINAL STRIP COVER
24. 24-CIRCUIT PANEL BOARD ~ MINIMUM SIZE SEPARATE MAIN BREAKER
25. LABEL CABINET WITH BUSSWORK RATING

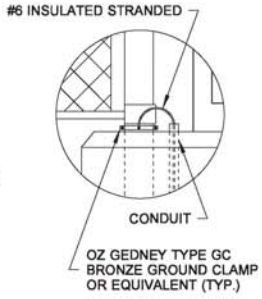

DETAIL (A)

THEODORE JOSEPH BAILEY
STATE OF WASHINGTON
39820
REGISTERED PROFESSIONAL ENGINEER

Bailey, Ted
May 28 2015 10:10 AM

SERVICE CABINET TYPE D (0 - 200 AMP TYPE 120/240 SINGLE PHASE) STANDARD PLAN J-10.21-00

SHEET 1 OF 1 SHEET

APPROVED FOR PUBLICATION
Bakotich, Pasco
Jun 3 2015 4:22 PM
STATE DESIGN ENGINEER
Washington State Department of Transportation

DRAWN BY: LISA CYFORD

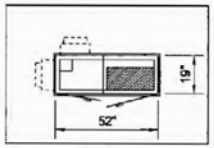

PLAN VIEW

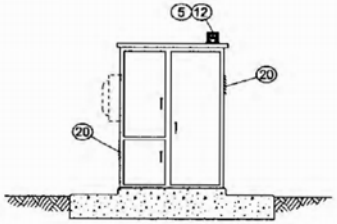

ELEVATION VIEW

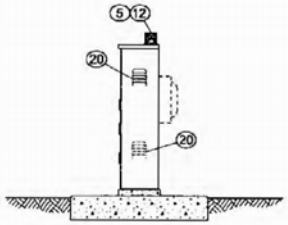

SIDE VIEW

SERVICE CABINET INSIDE RIGHT-OF-WAY

INSTALL FOUNDATION AS SLAB SECTION UNLESS IDENTIFIED FOR CONSTRUCTION IN FENCE LINE IN CONTRACT PLANS

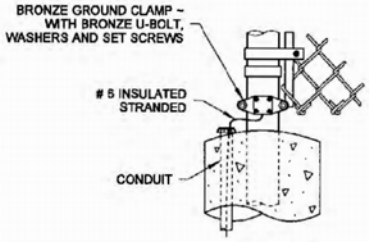

DETAIL (A)

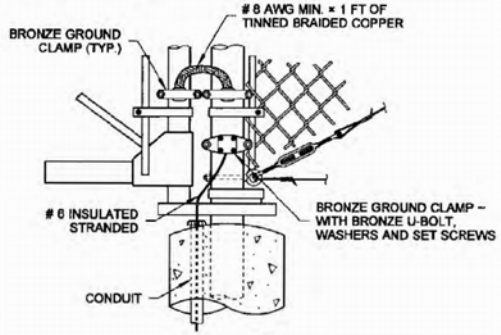

DETAIL (B)

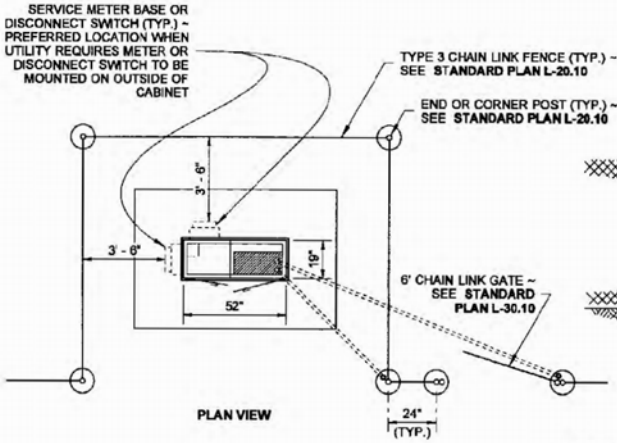

PLAN VIEW

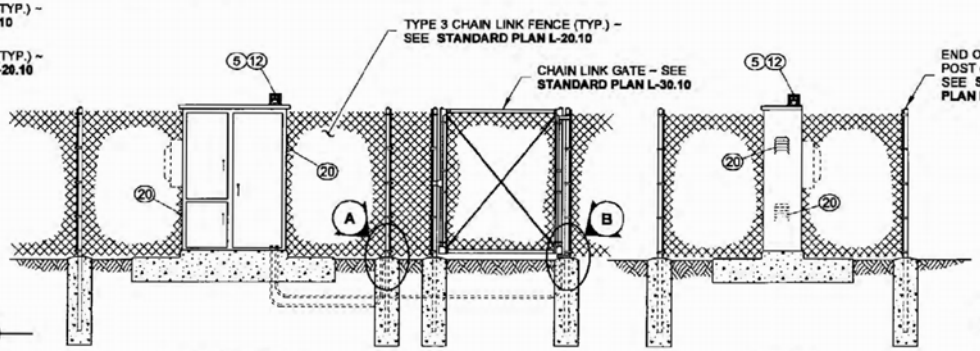

ELEVATION VIEW

SIDE VIEW

SERVICE CABINET WITHIN RIGHT-OF-WAY FENCE

FOR CONDUITS NOT SHOWN, DRAIN TILE FOR GROUNDING, DRAIN TUBES, REINFORCING STEEL, ETC. OMITTED FOR CLARITY, SEE **STANDARD PLAN J-10.10** FOR DETAILS.

NOTES

1. Metering Arrangements vary with different servicing utilities. The utility may require meter base mounting in the enclosure, on the side, or on the back of the enclosure. The utility may require the dimension between the door and the front of the safety socket box to be less than the 11" shown in the left side safety socket box mounting detail, see **Standard Plan J-3b**. The Contractor shall verify the serving utility's requirements prior to fabrication of and installing the service equipment.
2. The requirement for a disconnect switch ahead of the Meter varies with different serving utilities. The Contractor shall verify the serving utilities requirements prior to fabrication and installing the service equipment.
3. See **Standard Specification 9-29.24,** Service Cabinets.
4. Hinges shall have stainless steel or brass pins.
5. Cabinets shall be rated NEMA 3R and shall include two rain tight vents.
6. Metering equipment doors shall be pad lockable. Each door shall be gasketed. Install best construction core on bottom left and right doors. See door hinge detail, **Standard Plan J-3b**. Concealed heavy duty stainless steel lift off hinges are allowed as an alternative. Upper left door shall have 3 hinges, lower left door shall have 2 hinges, and right door shall have 3 hinges. All doors shall have a two position door stop assembly.
7. The following equipment within the service enclosure shall have an appropriately engraved phenolic name plate attached with screws or rivets: Key number 2, 3, 4, 6, 7, 8, 9, 16, 21 and 24. Key number 4 name plate shall read: "Photocell Bypass Test On" and "Photocell Test Off-Automatic". See Service Cabinet detail.
8. The dimensions shown are minimum and shall be adjusted to accommodate the various sizes of equipment installed.
9. All busswork shall be high grade copper and shall equal or exceed the main breaker rating. All breakers shall bolt onto the busswork. Jumpering of breakers shall not be allowed. Busswork shall accommodate all future equipment as shown in the breaker schedule.
10. The photocell unit shall be centered in the photocell enclosure to permit 360 degree rotation of the photocell without removal of the photocell unit or the photocell enclosure.
11. All internal wire runs shall be identified with "To-From" coded tags labeled with the code letters and/or numbers shown on the schedules. Approved PVC or Polyolefin wire marking sleeves shall be used.
12. All nuts, bolts, and washers used for mounting photocell enclosure shall be stainless steel.
13. A 1% tolerance is allowed for all dimensions.
14. See plans for breaker schedule.
15. Install conduit couplings on all conduits. Place couplings flush with top of concrete foundation.
16. Seal cabinet to foundation with a 1/2" bead of silicone. Apply silicone to dry surface only.
17. The meter base portion of this service was designed to meet metering portion of Euserc Drawing 309 requirements.

5-29-13

SERVICE CABINET TYPE E (0 - 200 AMP TYPE 240/480 SINGLE PHASE

STANDARD PLAN J-10.22-00

SHEET 1 OF 2 SHEETS

APPROVED FOR PUBLICATION

STATE DESIGN ENGINEER — DATE 5/29/13

Washington State Department of Transportation

DRAWN BY: LISA CYFORD

KEY

1. Meter base per serving utility requirements. As a minimum, the meter base shall be safety socket box with factory installed test bypass facility that meets the requirements of Eusarc Drawing 305.
2. Main Breaker (See Breaker Schedule).
3. Photocell Breaker (SPST 15 AMP - 120/240 volt).
4. Test With (SPDT snap action, positive close 15 AMP - 120/277 volt "T" rated).
5. Photoelectric Control, **Standard Specification 9-29.11(2).**
6. Branch Breaker (see Breaker Schedule).
7. Signal Transformer Breaker (see Breaker Schedule).
8. Contactor (see Breaker Schedule).
9. Receptacle Breaker (SPST 20 AMP - 120/240 volt).
10. Receptacle, Grounded (GFCI 20 AMP - 125 volt).
11. Neutral Buss, 14 lug copper with stainless steel Allen head screws.
12. Photocell Enclosure - enclosure to be fabricated from 5/8" expanded steel mesh with welded seams and mounting flanges. Hot dip galvanized after fabrication. Type 5052 - H32 aluminum with 5/8" × 5/8" openings equivalent to 5/8" expanded steel mesh may be used was alternative material. See Photocell Enclosure Mounting details, **Standard Plan J-3b.**
13. Hinged front facing door with 4" × 4" min. polished wire glass window.
14. Hinged dead front with 1/4 turn fasteners or slide latch.
15. Cabinet Main Bonding Jumper. Buss shall be 4 lug tinned copper. See Cabinet Main bonding Jumper detail, **Standard Plan J-3b.**
16. Spare Branch Breaker (DPST 20 AMP - 240/480 volt).
17. Metal Wiring Diagram Holder.
18. Removable Equipment Mounting Pan.
19. 6" × 6" min, underground feed - service wire-way (left rear corner).
20. Screened Vents, 2 required, 1 each side, louvered plates.
21. Heater Breaker (SPST 15 AMP - 120/240 volt).
22. Thermostat, 40°F closure 3 differential.
23. Strip Heater (100 watt nominal), with terminal strip cover.
24. Transformer Breaker (DPST 15 AMP - 480 volt).
25. Dry Transformer (480/120 volt) 3 KVA copper bussed and copper wound.
26. Reserved for meter, current transformer and/or disconnect switch as required by the utility.
27. 24 circuit panel board - minimum size with separate main breaker.
28. Label Cabinet with Buss work rating.
29. 6 Circuit Panel Board - minimum size.
30. Molded Case Switch, Rating of switch shall equal or exceed main breaker rating. Provide landing lugs rated to accept 350 Kcmil conductors. (Omit if utility requires the disconnect switch to be mounted externally, or if the utility does not require the disconnect switch).
31. Molded case switch standoff bracket. (Omit if utility requires the disconnect switch to be mounted externally, or if the utility does not require the disconnect switch).
32. Molded case switch enclosure with cover. (Omit if utility requires the disconnect switch to be mounted externally, or if the utility does not require the disconnect switch).

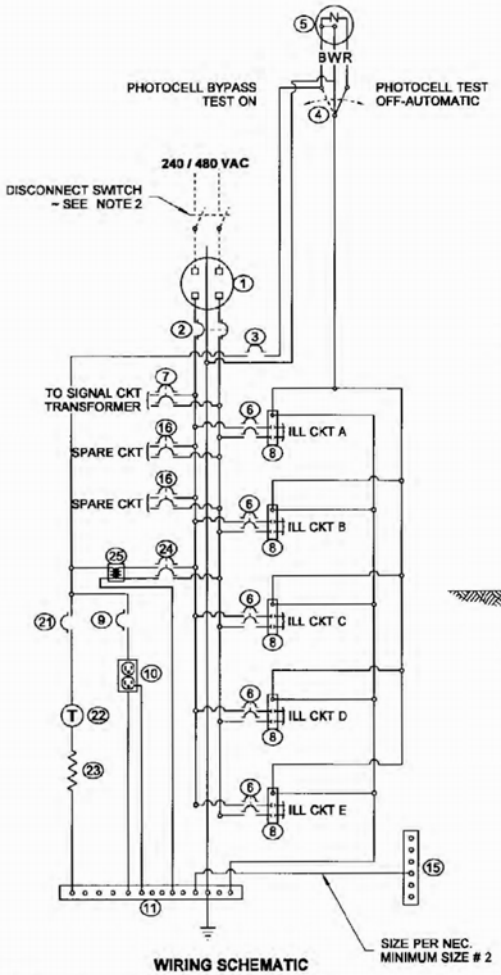

WIRING SCHEMATIC

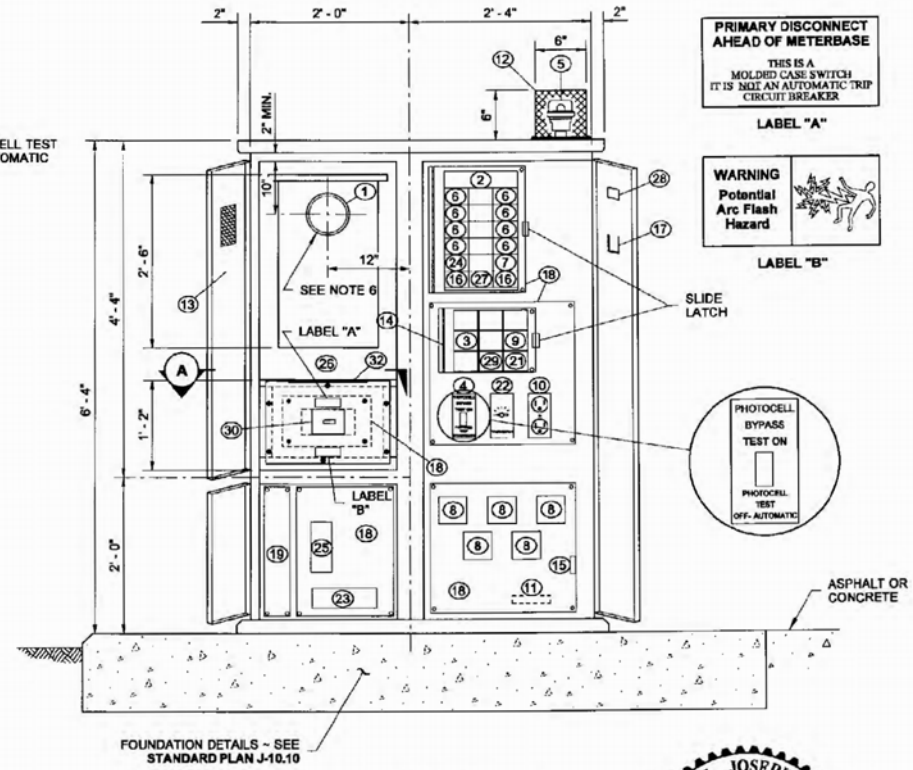

SERVICE CABINET DETAILS

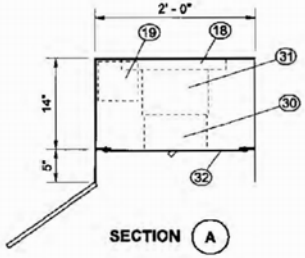

SECTION (A)

5-29-13

SERVICE CABINET TYPE E
(0 - 200 AMP TYPE 240/480
SINGLE PHASE

STANDARD PLAN J-10.22-00

SHEET 2 OF 2 SHEETS

APPROVED FOR PUBLICATION

STATE DESIGN ENGINEER — DATE 5/29/13

Washington State Department of Transportation

DRAWN BY: LISA CYFORD

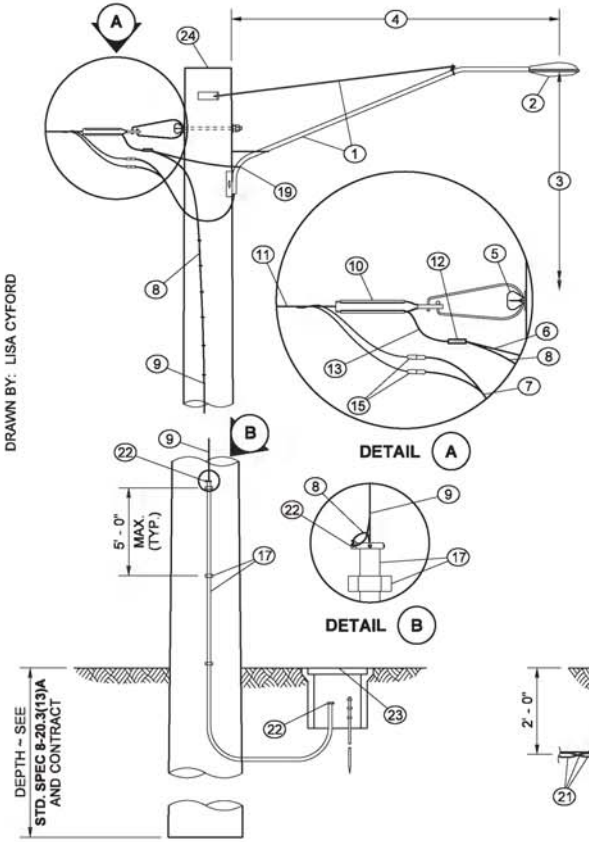

TIMBER LUMINAIRE SUPPORT

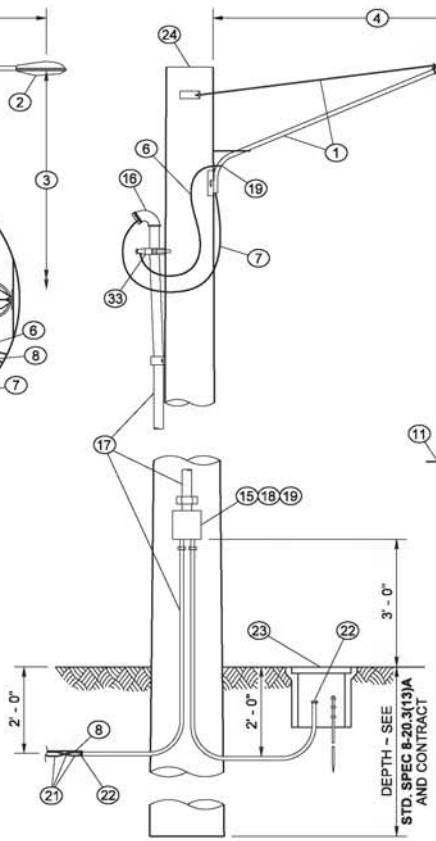

TIMBER LUMINAIRE SUPPORT

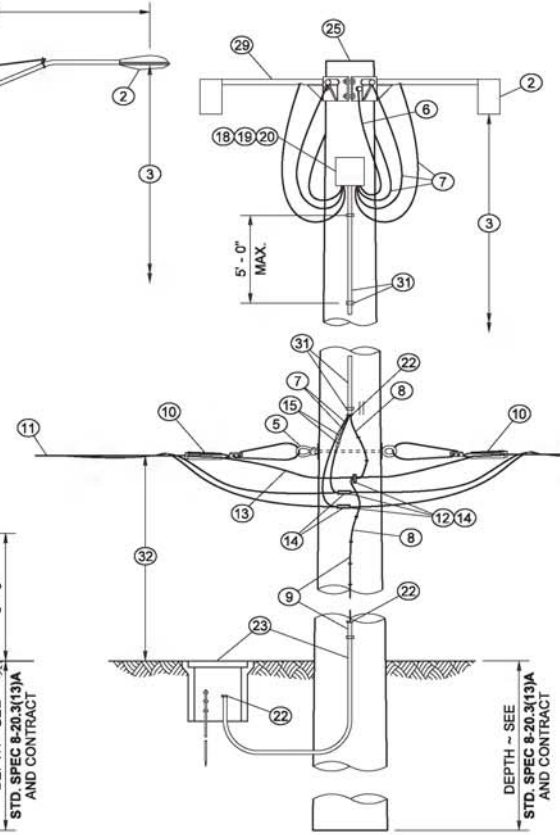

HIGH MAST TIMBER LUMINAIRE SUPPORT

SHOWN FOR 480 VAC POWER FEED ~
INCREASE CONDUCTOR AND FUSE SIZE
AS REQUIRED FOR 240 VAC POWER FEED

NOTES

1. Timber luminaire supports are allowed only for temporary installations where breakaway or Slip Bases are not required.
2. When down guys are required, see **Standard Plan J-15.15.**

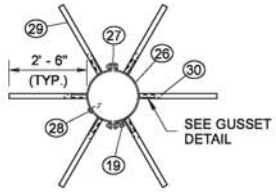

PLAN VIEW
LUMINAIRE SUPPORT BRACKET

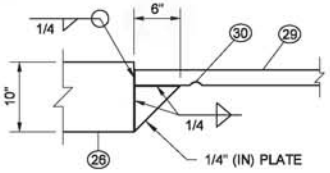

GUSSET DETAIL

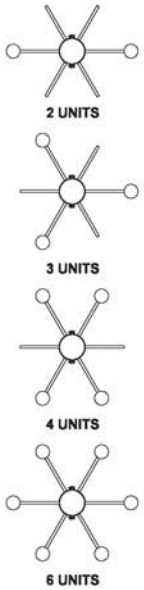

PLAN VIEW
TYPICAL LUMINAIRE MOUNTING CONFIGURATIONS

KEY

1. GALVANIZED STEEL OR ALUMINUM MAST ARM ~ CONFIGURATIONS VARY WITH MANUFACTURER
2. LUMINAIRE ~ SEE CONTRACT FOR TYPE AND NUMBER
3. MOUNTING HEIGHT ~ ROADWAY TO LUMINAIRE ELEVATION DIFFERENCE ± 2% ~ SEE CONTRACT
4. MAST ARM LENGTH ~ SEE CONTRACT
5. 5/8" (IN) GALVANIZED THIMBLE EYE BOLT (SINGLE OR DOUBLE) WITH WASHERS AND NUTS OR EYENUT
6. BONDING JUMPER
7. POLE AND BRACKET CABLE
8. EQUIPMENT GROUNDING CONDUCTOR ~ SEE **STANDARD PLAN J-60.05**
9. FROM GROUND LINE TO 10' (FT) ABOVE GROUND, ENCLOSE EQUIPMENT GROUNDING CONDUCTOR IN GALVANIZED STEEL CONDUIT, CODE SIZED ~ ABOVE 10' (FT) FROM GROUND, STAPLE EQUIPMENT GROUNDING CONDUCTOR TO POLE ~ CONNNECT TO SUPPLEMENTAL GROUND, PER **STANDARD PLAN J-60.05**
10. SERVICE WEDGE CLAMP
11. ACSR TRIPLEX OR FOURPLEX CONDUCTORS ~ SEE CONTRACT
12. CU \ AL SPLIT BOLT CONNECTOR
13. MESSENGER CABLE
14. INSULATING TAPE FOR WATERPROOF CONNECTION
15. FUSED QUICK DISCONNECT, PER **STANDARD SPECIFICATION 9-29.7(2)** ~ USE 30 AMP FUSES FOR HIGH MAST SUPPORTS
16. WEATHERHEAD ~ SIZE AS REQUIRED
17. STEEL CONDUIT ~ STRAPS SPACED MAXIMUM 5' (FT) APART AND NEAR ALL CONDUIT ENDS
18. 8" (IN) × 8" (IN) × 4" (IN) NEMA 3R JUNCTION BOX WITH RAIN-TIGHT HUBS AND REMOVABLE COVER
19. GROUNDING LUG
20. 12-POLE TERMINAL BLOCK
21. DIRECT BURIAL CONDUCTORS OR GALVANIZED STEEL OR PVC CONDUITS WITH CONDUCTORS ~ SEE CONTRACT
22. GROUNDING END BUSHING
23. SUPPLEMENTAL GROUND ~ SEE **STANDARD PLAN J-60.05**
24. CLASS 5 TIMBER POLE ~ LENGTH SUFFICIENT FOR MOUNTING HEIGHT AND BURIAL DEPTH
25. CLASS 2 TIMBER POLE ~ LENGTH SUFFICIENT FOR MOUNTING HEIGHT AND BURIAL DEPTH
26. 1/4" (IN) × 10" (IN) PLATE COLLAR BENT TO FIT POLE DIAMETER (8" (IN) - 10"(IN))
27. 3/8" (IN) × 4" (IN) MACHINE BOLTS (FOUR REQUIRED) WITH WASHERS AND NUTS
28. 1/2" (IN) LAG BOLTS (SIX REQUIRED) ~ DRILL 9/16" (IN) HOLE IN PLATE
29. 2" (IN) PIPE
30. 3/4" (IN) WIRE HOLE 2" (IN) FROM GUSSET PLATE, SMOOTH HOLE EDGES
31. 1" (IN) NON-METALLIC CONDUIT WITH 1" (IN) STRAPS SPACED MAXIMUM 5' (FT) APART AND NEAR ALL CONDUIT ENDS
32. DISTANCE VARIES, 35' (FT) MIN. TO 50' (FT) MAX. DEPENDING ON LINE CLEARANCE REQUIREMENTS
33. CONDUIT GROUND CLAMP

Theodore Joseph Bailey
Digitally signed by baileyte@wsdot.wa.gov
DN: cn=baileyte@wsdot.wa.gov
Date: 2014.05.12 13:31:25 -07'00'

TIMBER LIGHT STANDARD

STANDARD PLAN J-15.10-01

SHEET 1 OF 1 SHEET

APPROVED FOR PUBLICATION
Bakotich, Pasco
Jun 11 2014 1:29 PM
STATE DESIGN ENGINEER
Washington State Department of Transportation

DRAWN BY: COLBY FLETCHER

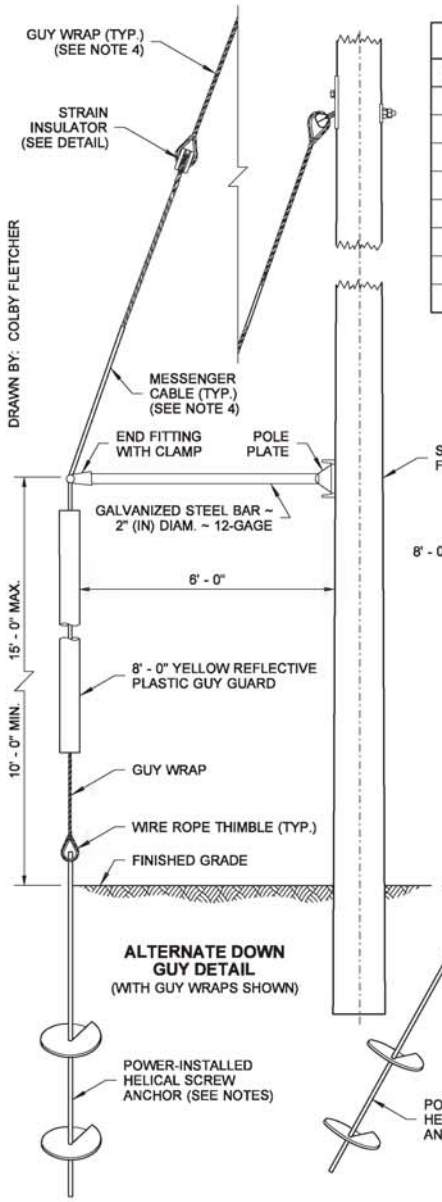

ALTERNATE DOWN GUY DETAIL
(WITH GUY WRAPS SHOWN)

ANCHOR ASSEMBLIES
(SEE **STANDARD SPECIFICATION 9-29.4**)

RAKE TABLE	
POLE CLASS	RAKE
1900#	7"
2700#	6"
3700#	5"
4800#	5"
5400#	4"
4300#	4"
7200#	4"
ALL TIMBER	6"

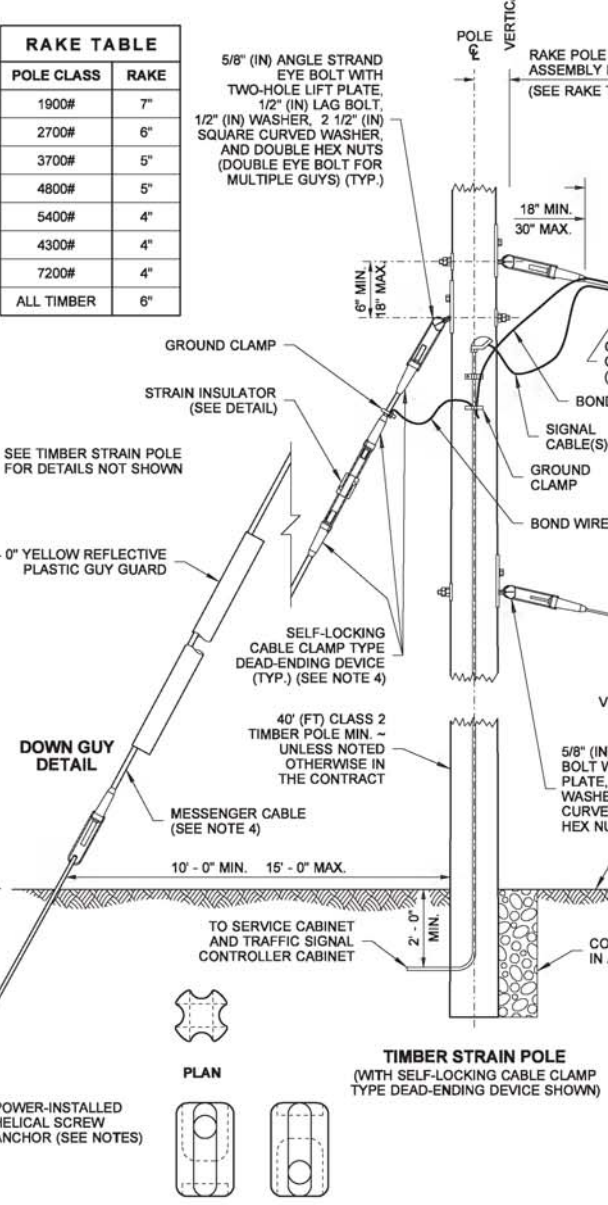

TIMBER STRAIN POLE
(WITH SELF-LOCKING CABLE CLAMP TYPE DEAD-ENDING DEVICE SHOWN)

STRAIN INSULATOR DETAIL

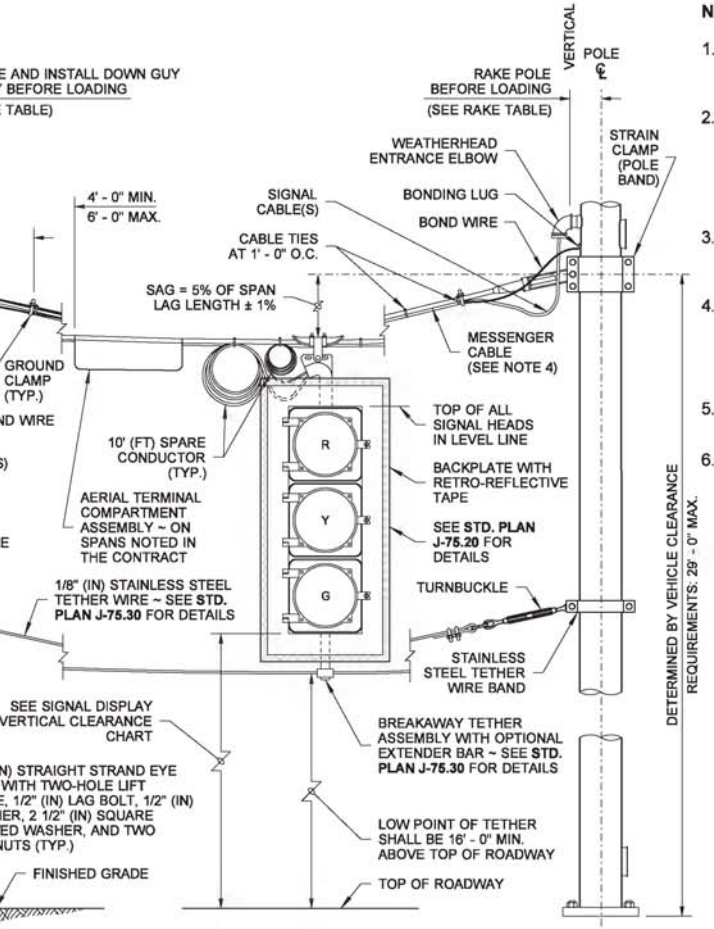

TYPE IV OR TYPE V STRAIN POLE STANDARD
(SEE NOTE 3)

SIGNAL DISPLAY VERTICAL CLEARANCE TO ROADWAY								
HORIZONTAL DISTANCE FROM STOP LINE	40'		45'		50'		53' - 180'	
	MIN.	MAX.	MIN.	MAX.	MIN.	MAX.	MIN.	MAX.
3-SECTION 5-SECTION DOGHOUSE	16.5'	17.5'	16.5'	19.2'	16.5'	20.9'	16.5'	22.0'
4-SECTION	16.5'	17.0'	16.5'	18.0'	16.5'	19.7'	16.5'	20.8'
5-SECTION	16.5'	17.0'	16.5'	17.5"	16.5'	18.5'	16.5'	19.6'
MEASURED FROM BOTTOM OF SIGNAL HEAD HOUSING TO ROADWAY								

NOTES

1. An eight-way expanding anchor may be used as an acceptable alternate to power-installed helical screw anchor.
2. If anchor hole diameter is greater than nominal diameter of folded anchors, a 5' (ft) cover of 6" (in) to 12" (in) size rock shall be tamped in to replace the disturbed soil immediately above the anchor.
3. See **Standard Plans J-27.10** and **J-27.15** for Type IV or Type V Strain Pole details not shown.
4. Self-Locking Cable Clamp Type Dead-Ending Device or Guy Wrap may be used. See **Standard Spec. Sect. 8-20.3(7)** for additional requirements.
5. See Contract for Emergency Preempt Detector locations.
6. Timber strain pole burial depth is 10 percent (%) of the total pole length plus two (2) feet (**Standard Spec. Sect. 8-20.3(14)E**) when foundation soil lateral bearing pressure is 2000 PSF and a friction angle 32 degree (°) or greater soil lateral pressure. Helical anchor soil lateral bearing pressure is 1000 PSF and a friction angle 26 degree (°) or greater Soil lateral bearing pressure below 2000 PSF for timber strain pole or soil lateral bearing pressure below 1000 PSF for helical anchor requires Special Design. Contact the WSDOT Bridge and Structures office through the Engineer for Special Design timber strain pole burial depth.

THEODORE JOSEPH BAILEY
STATE OF WASHINGTON
39820
REGISTERED
PROFESSIONAL ENGINEER

Bailey, Ted
Jul 8 2015 3:05 PM

SPAN WIRE INSTALLATION

STANDARD PLAN J-15.15-02

SHEET 1 OF 1 SHEET

APPROVED FOR PUBLICATION
Carpenter, Jeff
Jul 10 2015 7:21 AM
STATE DESIGN ENGINEER

Washington State Department of Transportation

DRAWN BY: FERN LIDDELL

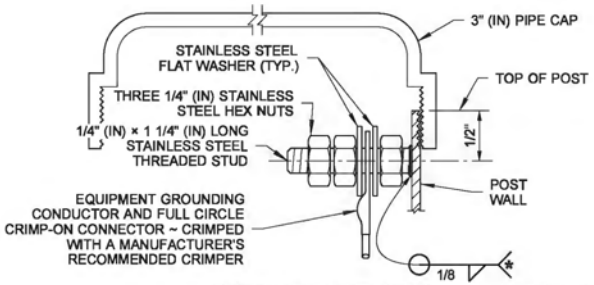

GROUNDING CONNECTION DETAIL

* WELD STUD TO POLE WALL TO MAXIMUM EXTENT POSSIBLE (1/2" (IN) MINIMUM WELD)

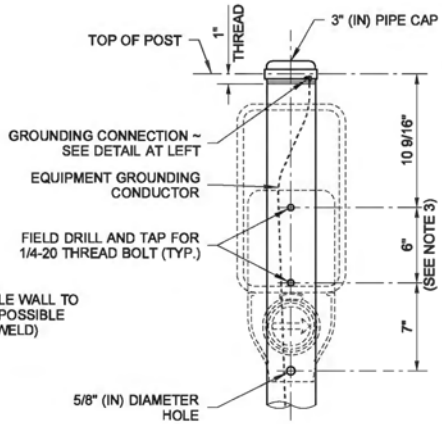

POST DETAIL

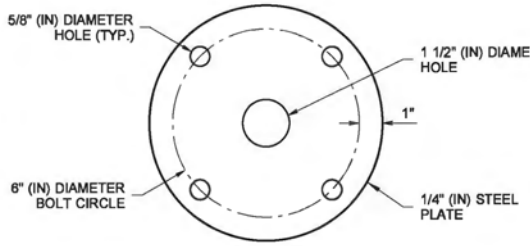

ANCHOR BOLT TEMPLATE

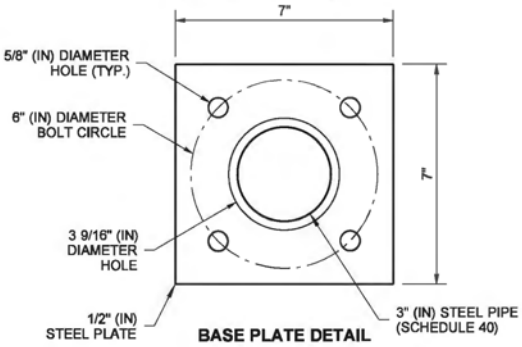

BASE PLATE DETAIL

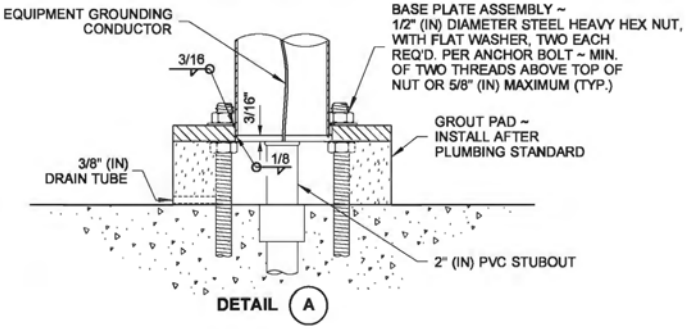

DETAIL A

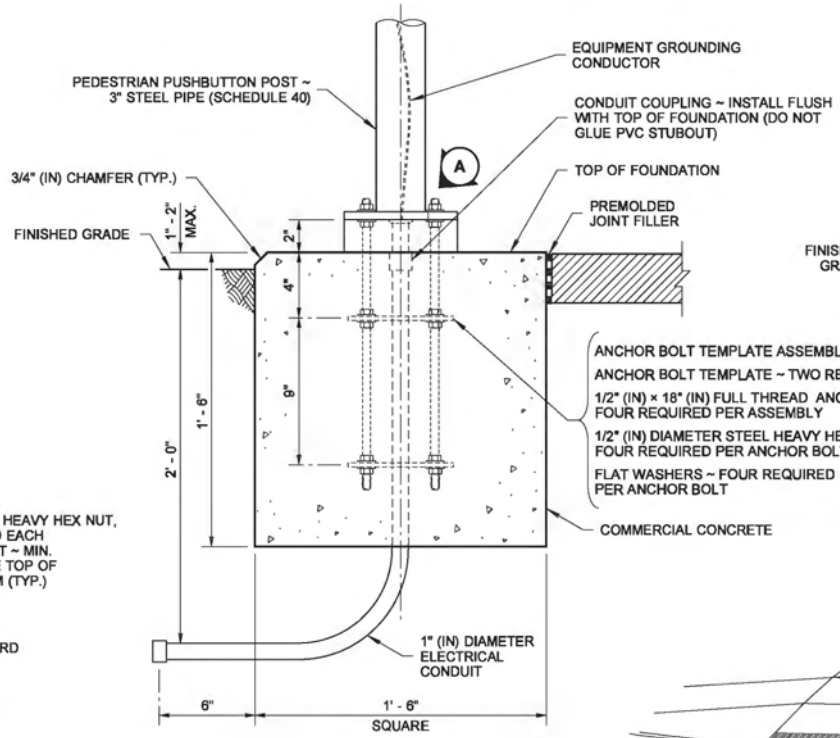

FOUNDATION DETAIL

NOTES

1. See **Standard Plan J-20.26** for Accessible Pedestrian Pushbutton details.
2. Where shown in the plans, install plaque (R10-32P) "PUSH BUTTON FOR 2 SECONDS FOR EXTRA CROSSING TIME" above the Accessible Pedestrian Signal (APS) assembly. Add 14" (in) to post height to accommodate plaque and leave a 2" (in) space between signs.
3. Mounting distances vary between manufacturers. See manufacturers recommendations for mounting information.
4. Junction Box serving the Standard shall preferably be located 5' - 0" (10' - 0" Max.) from the Standard.

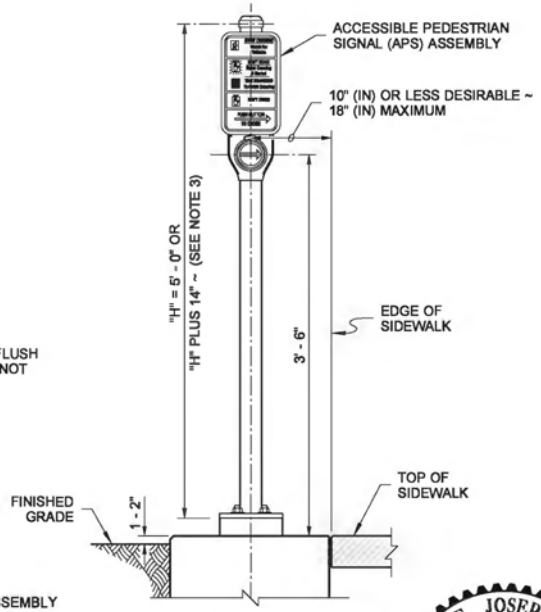

ELEVATION

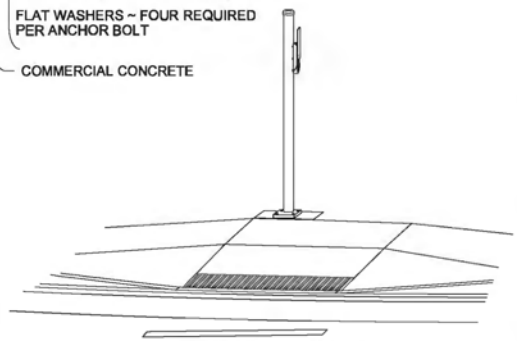

PERSPECTIVE VIEW

Bailey, Ted
Jun 26 2014 4:20 PM

ACCESSIBLE PEDESTRIAN PUSHBUTTON POST (PPB) AND FOUNDATION

STANDARD PLAN J-20.10-03

SHEET 1 OF 1 SHEET

APPROVED FOR PUBLICATION

Bakotich, Pasco
Jun 30 2014 3:09 PM

STATE DESIGN ENGINEER

Washington State Department of Transportation

DRAWN BY: FERN LIDDELL

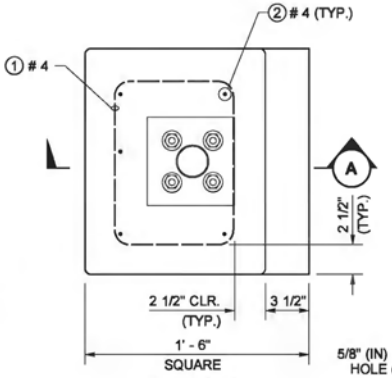

PLAN VIEW

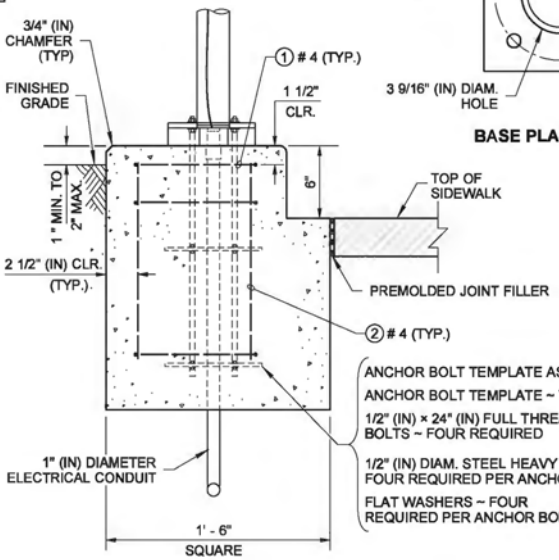

SECTION (A)

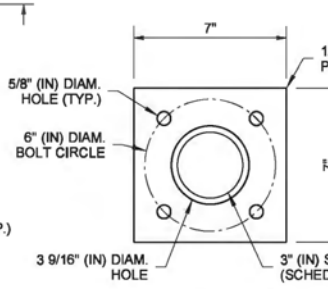

BASE PLATE DETAIL

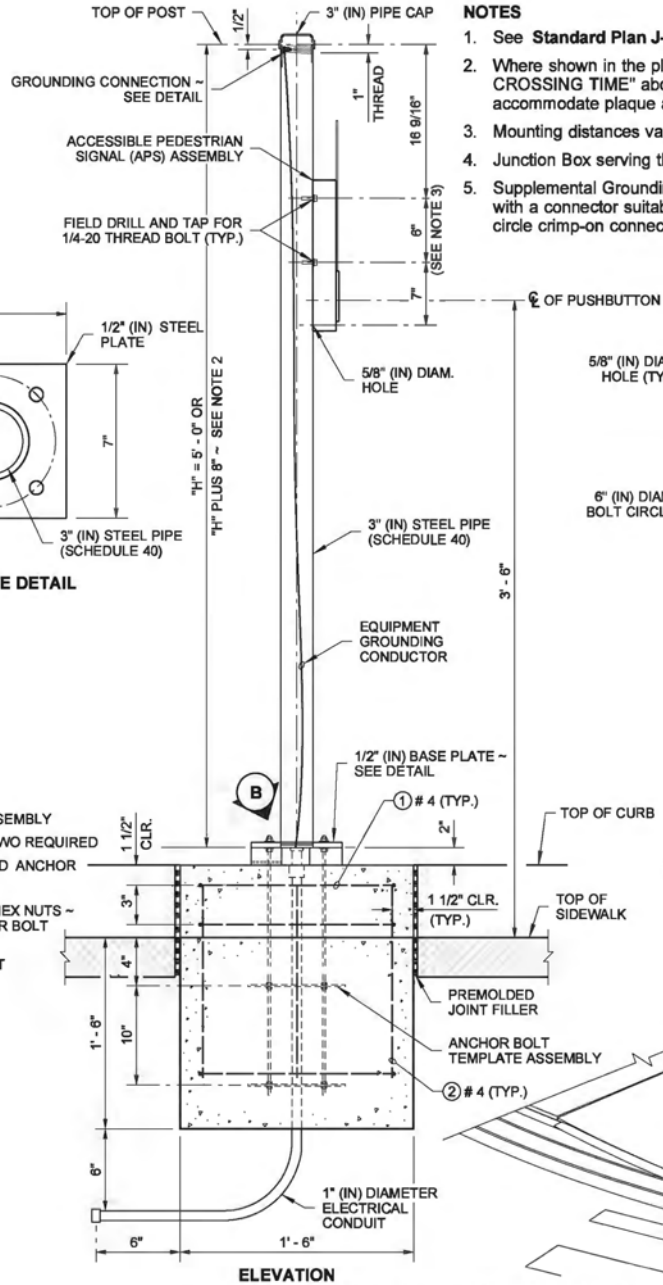

ELEVATION

NOTES

1. See **Standard Plan J-20.26** for Accessible Pedestrian Pushbutton details.
2. Where shown in the plans, install plaque (R10-32P) "PUSH BUTTON FOR 2 SECONDS FOR EXTRA CROSSING TIME" above the Accessible Pedestrian Signal (APS) assembly. Add 14" (in) to the PPB post height to accommodate plaque and leave a 2" (in) space between signs.
3. Mounting distances vary between manufacturers. See manufacturers recommendations for mounting information.
4. Junction Box serving the Standard shall preferably be located 5' - 0" (10' - 0" Max.) from the Standard.
5. Supplemental Grounding Conductor shall be non-insulated #4 AWG stranded copper and shall be clamped to vertical rebar with a connector suitable for use embedded in concrete: Provide 3' - 0" min. slack. Attach to pole grounding stud with a full circle crimp-on connector (crimped with a manufacturer recommended crimper).

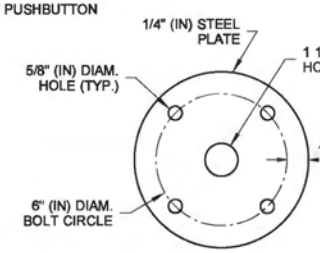

ANCHOR BOLT TEMPLATE

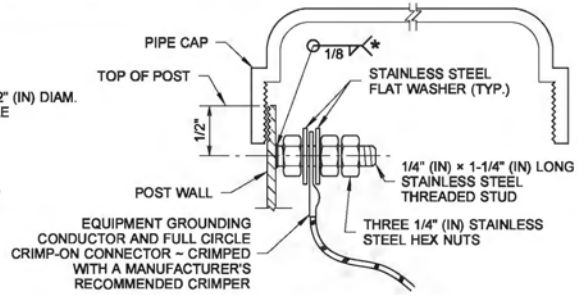

GROUNDING CONNECTION DETAIL

* WELD STUD TO POLE WALL TO MAXIMUM EXTENT POSSIBLE ~ 1/2" (IN) MINIMUM WELD

CONFIGURATIONS VARY AMONG DIFFERENT MANUFACTURERS

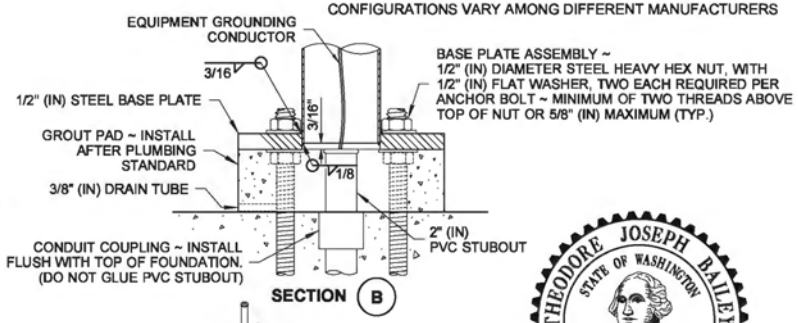

SECTION (B)

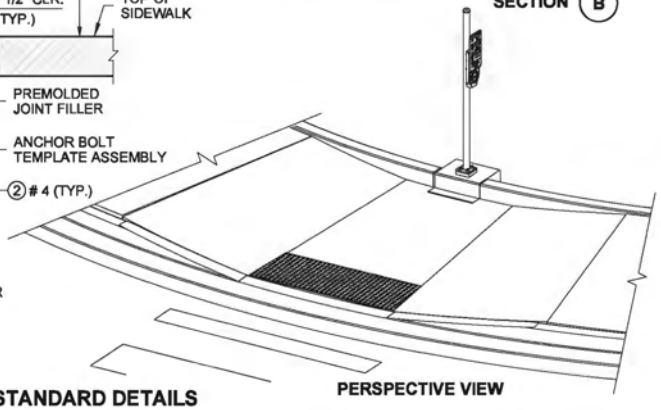

PERSPECTIVE VIEW

REINFORCING STEEL BENDING DIAGRAM

SEE **STD. SPEC. 9-07.1(2)** FOR BENDING DIAMETERS

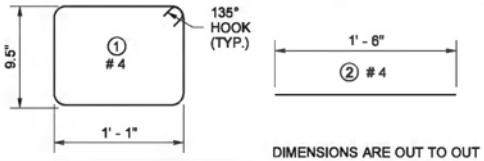

DIMENSIONS ARE OUT TO OUT

TYPE PPB STANDARD DETAILS

Bailey, Ted
Jun 26 2014 4:22 PM

ACCESSIBLE PEDESTRIAN PUSHBUTTON WITH CURB BASE

STANDARD PLAN J-20.11-02

SHEET 1 OF 2 SHEETS

APPROVED FOR PUBLICATION
Bakotich, Pasco
Jun 30 2014 3:10 PM
STATE DESIGN ENGINEER

Washington State Department of Transportation

DRAWN BY: FERN LIDDELL

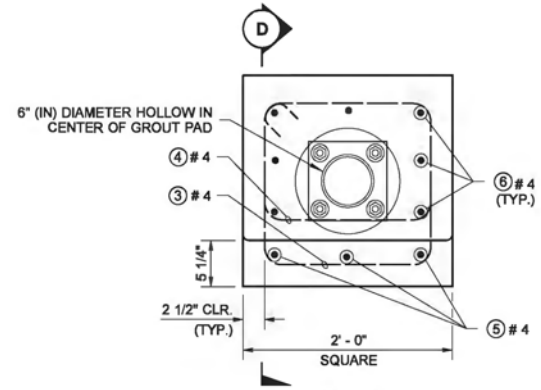

PLAN VIEW

FOUNDATION DETAILS

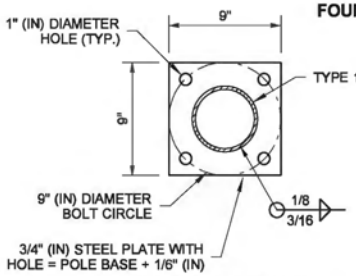

BASE PLATE DETAIL

REINFORCING STEEL QUANTITIES LIST				
MARK	③	④	⑤	⑥
QTY.	3	2	3	7

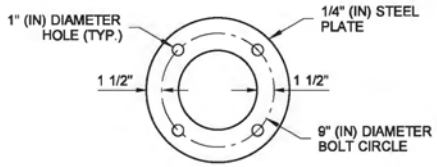

ANCHOR BOLT TEMPLATE

REINFORCING STEEL BENDING DIAGRAM

SEE **STD. SPEC. 9-07.1(2)** FOR BENDING DIAMETER

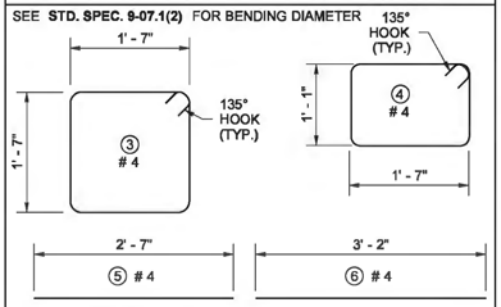

DIMENSIONS ARE OUT TO OUT

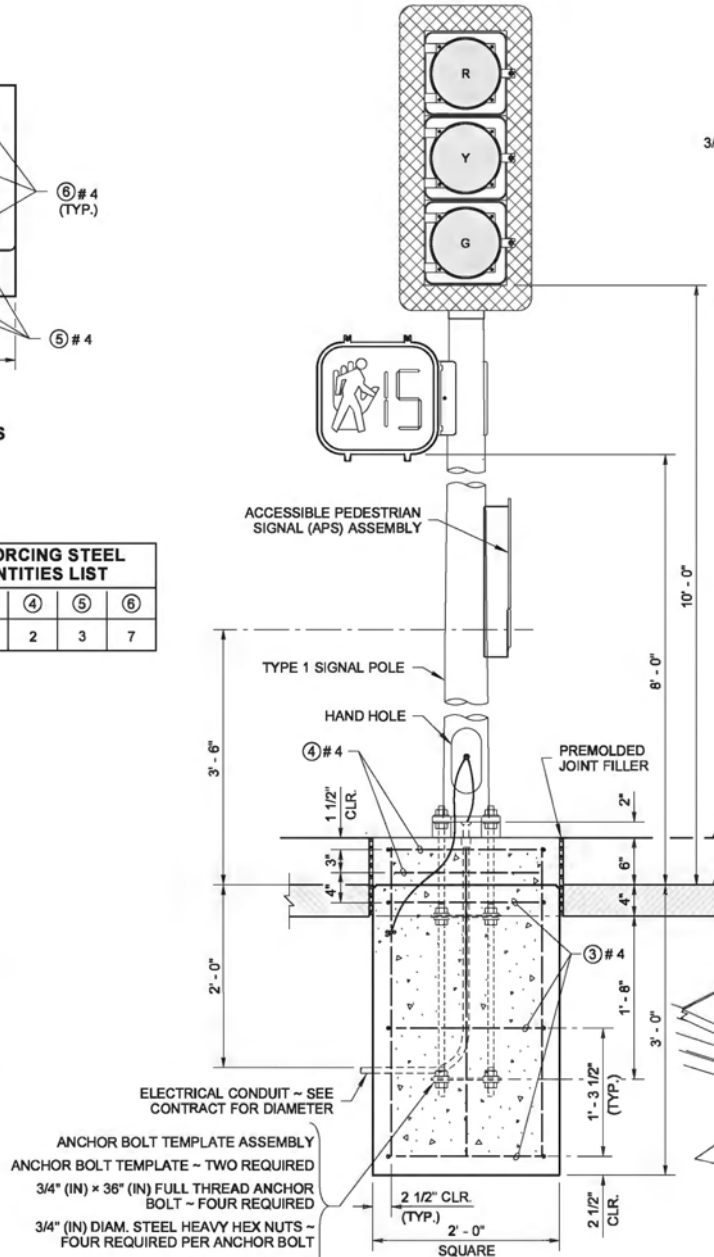

ELEVATION

FOUNDATION DETAIL

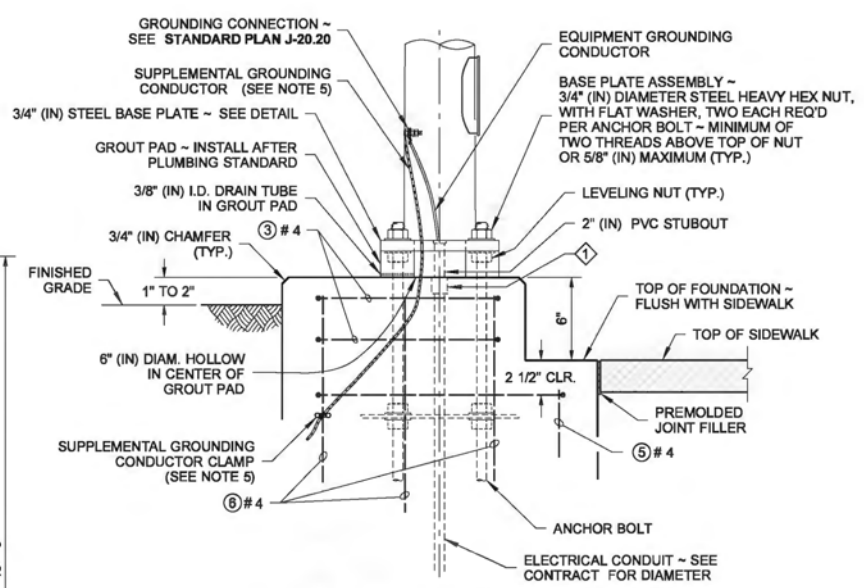

SECTION D

KEY NOTE

7 CONDUIT COUPLING ~ INSTALL FLUSH WITH TOP OF FOUNDATION. (DO NOT GLUE PVC STUBOUT)

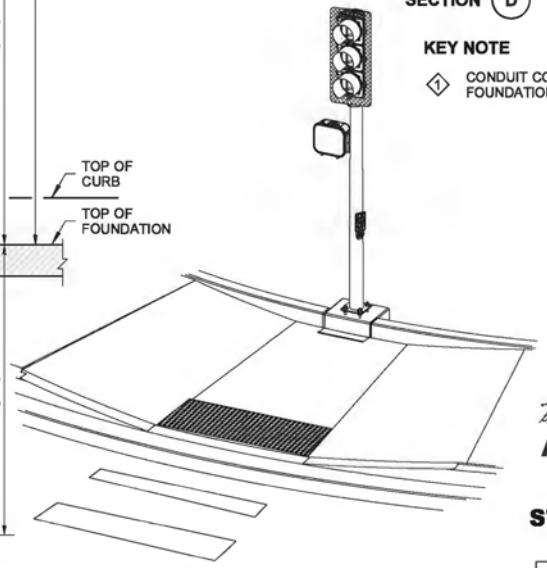

PERSPECTIVE VIEW

TYPE 1 SIGNAL STANDARD DETAILS

Bailey, Ted
Jun 26 2014 4:23 PM

ACCESSIBLE PEDESTRIAN PUSHBUTTON WITH CURB BASE

STANDARD PLAN J-20.11-02

SHEET 2 OF 2 SHEETS

APPROVED FOR PUBLICATION

Bakotich, Pasco
Jun 30 2014 3:10 PM

STATE DESIGN ENGINEER

Washington State Department of Transportation

DRAWN BY: FERN LIDDELL

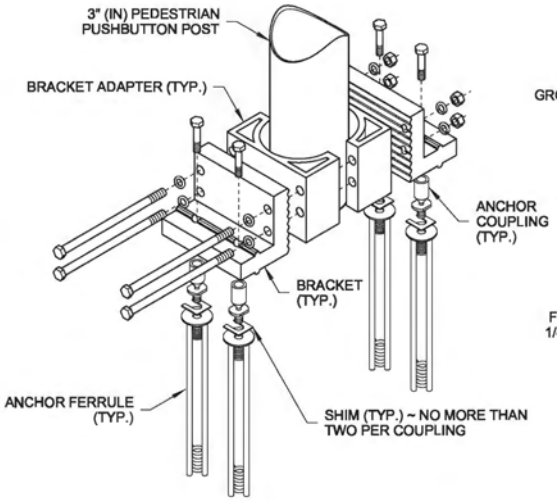

EXPLODED VIEW
BREAKAWAY BASE CONNECTOR
(SEE NOTE 1)

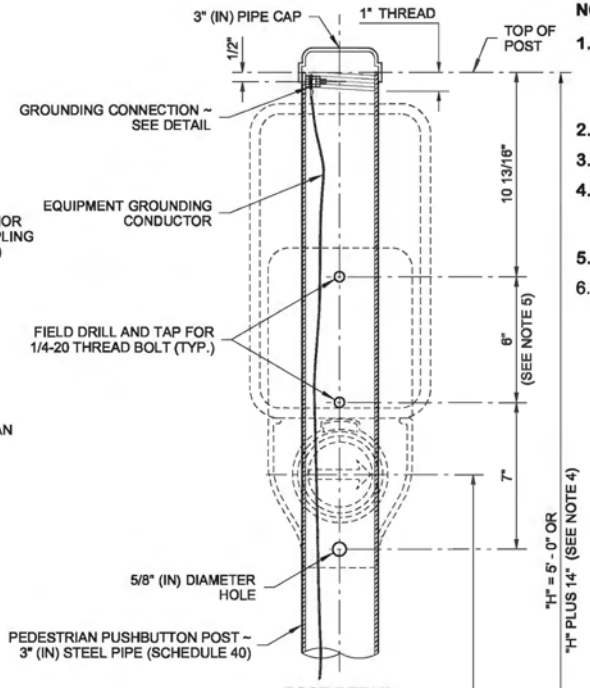

POST DETAIL

NOTES

1. See **Standard Specification 9-06.16** for Breakaway Base Connection details. Dimensions for the parts used to assemble the base connections are intentionally not shown. Base connections are patented manufactured products that are in compliance with NCHRP 350 crash test criteria. The Breakaway Base Connection details are only shown on this plan to illustrate how parts are assembled.
2. See **Standard Plan J-20.26** for Accessible Pedestrian Pushbutton details.
3. Secure conductor in adjacent Junction Box per detail in **Standard Plan J-28.70**.
4. Where shown in the plans, install plaque (R10-32P) "PUSH BUTTON FOR 2 SECONDS FOR EXTRA CROSSING TIME" above the Accessible Pedestrian Signal (APS) assembly. Add 14" (in) to post height to accommodate plaque and leave a 2" (in) space between signs.
5. Mounting distances vary between manufacturers. See manufacturer's recommendations for mounting information.
6. Junction Box serving the Standard shall preferably be located 5' - 0" (10' - 0" Max.) from the Standard.

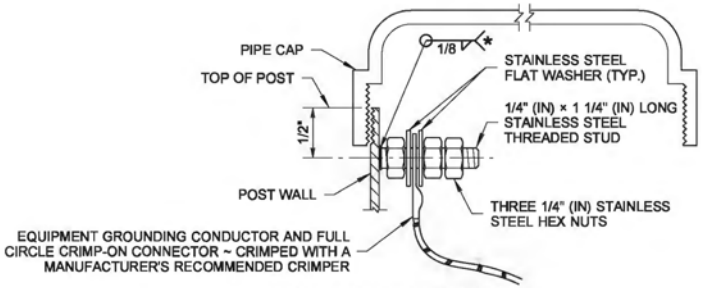

GROUNDING CONNECTION DETAIL

* WELD STUD TO POLE WALL TO MAXIMUM EXTENT POSSIBLE ~ 1/2" (IN) MINIMUM WELD

CONFIGURATIONS VARY AMONG DIFFERENT MANUFACTURERS (SHOWN EXPLODED FOR CLARITY)

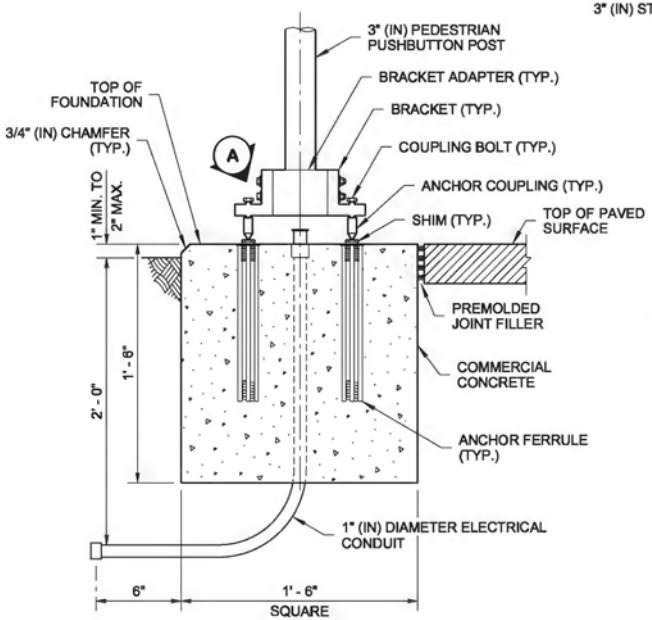

FOUNDATION DETAIL

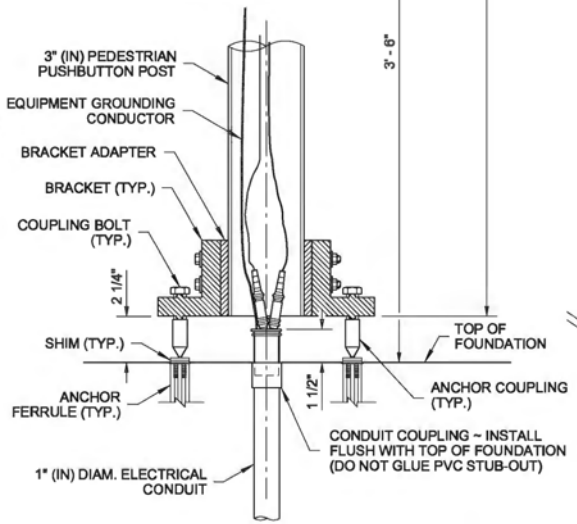

DETAIL A

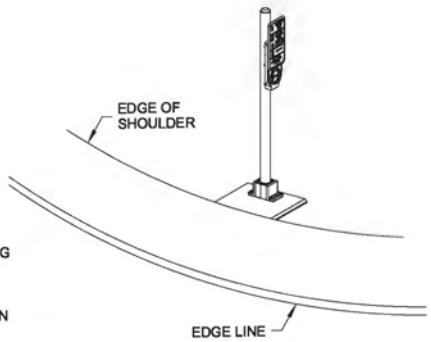

Bailey, Ted
Jun 26 2014 4:25 PM

ACCESSIBLE BREAKAWAY PEDESTRIAN PUSHBUTTON (PPB) POST

STANDARD PLAN J-20.15-03

SHEET 1 OF 1 SHEET

APPROVED FOR PUBLICATION
Jun 30 2014 3:11 PM
STATE DESIGN ENGINEER
Washington State Department of Transportation

DRAWN BY: FERN LIDDELL

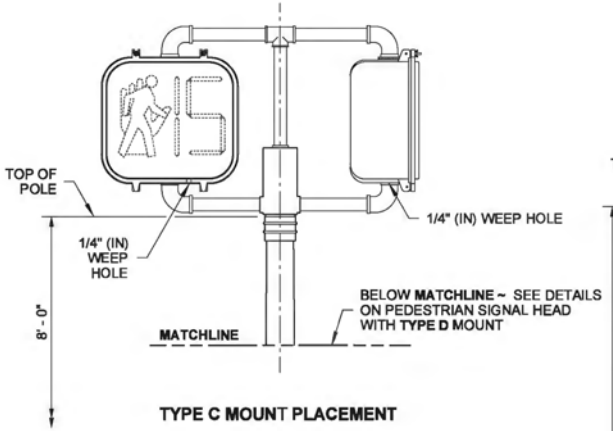

TYPE C MOUNT PLACEMENT

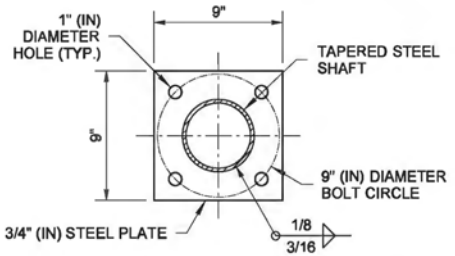

BASE PLATE DETAIL

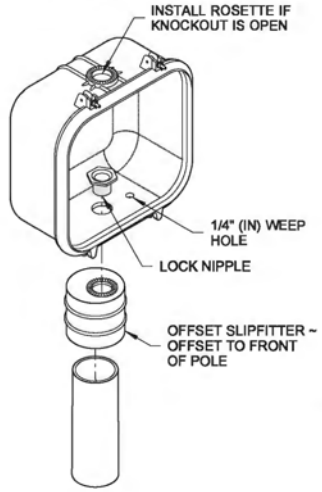

VIEW (A)

TYPE D MOUNTING DETAIL

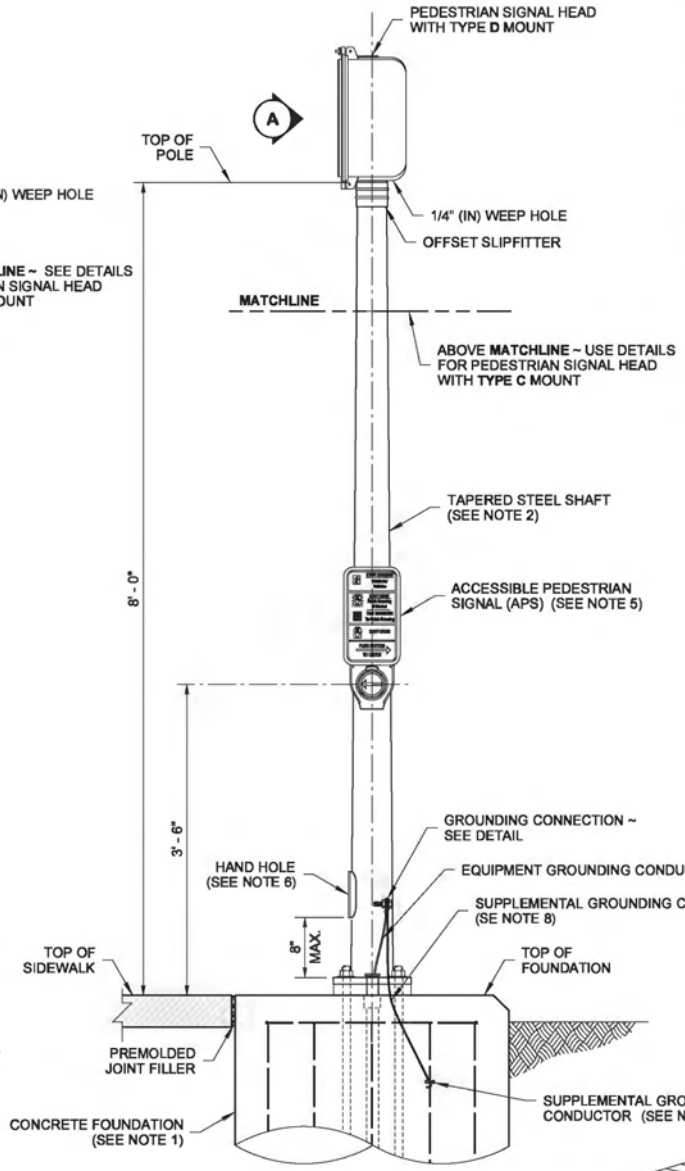

TYPE D MOUNT

PEDESTRIAN SIGNAL STANDARD

(FIXED BASE SHOWN)

NOTES

1. See **Standard Plan J-21.10** for Signal Standard Foundation with Fixed Base and Slip Base details.
2. Steel shaft shall be tapered either round or dodecagon (12-sided), 11 gage, 4 1/2" (in) O.D. at slipfitter weld. Taper shall be 0.14" (in) per foot.
3. Welding of structures shall be in accordance with the latest edition of the AWS D1.1 Structural Welding Code - Steel. All butt welds shall be ground flush with base metal.
4. See **Standard Plan J-20.26** for Accessible Pedestrian Pushbutton details.
5. See **Standard Plan J-20.20** for Accessible Pedestrian Signal Standard Electrical details.
6. Hand holes shall include a removable, rain-tight cover and gasket, fastened with two stainless steel screws (ASTM 593).
7. Supplemental grounding conductor shall be non-insulated #4 AWG stranded copper and shall be clamped to vertical rebar with a connector suitable for use embedded in concrete. Provide 3' - 0" min. slack. Attach to pole grounding stud with a full circle crimp-on connector (crimped with a manufacturer recommended crimper).
8. The junction box serving the standard shall preferably be located 5' - 0" (10' - 0" max.) from the standard.
9. Where shown in the plans, install plaque (R10 - 32P) "PUSH BUTTON FOR 2 SECONDS FOR EXTRA CROSSING TIME" two inches above the Accessible Pedestrian Signal (APS) Assembly.

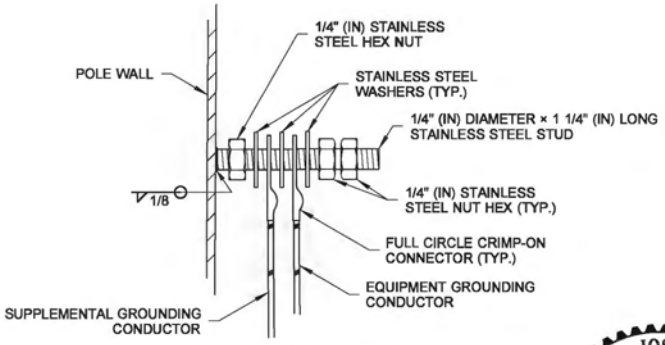

GROUNDING CONNECTION DETAIL

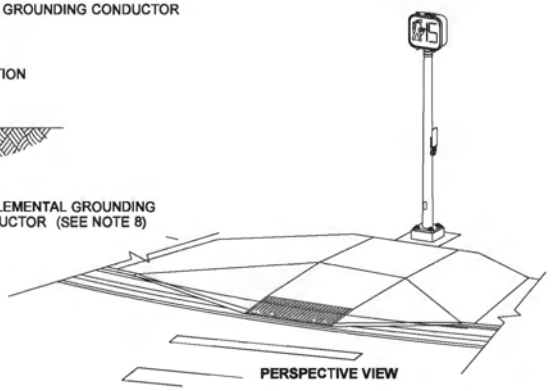

PERSPECTIVE VIEW

THEODORE JOSEPH BAILEY
STATE OF WASHINGTON
39820
REGISTERED
PROFESSIONAL ENGINEER

Bailey, Ted
Jun 26 2014 4:26 PM

PEDESTRIAN SIGNAL STANDARD (TYPE PS) DETAILS

STANDARD PLAN J-20.16-02

SHEET 1 OF 1 SHEET

APPROVED FOR PUBLICATION

Bakotich, Pasco
Jun 30 2014 3:12 PM

STATE DESIGN ENGINEER

Washington State Department of Transportation

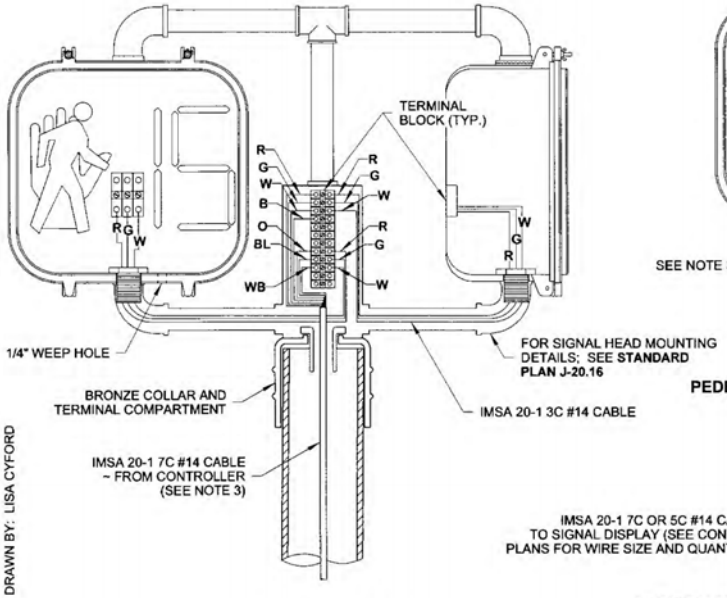

DOUBLE PEDESTRIAN SIGNAL WIRING DETAIL

(TYPE C MOUNTING SHOWN)

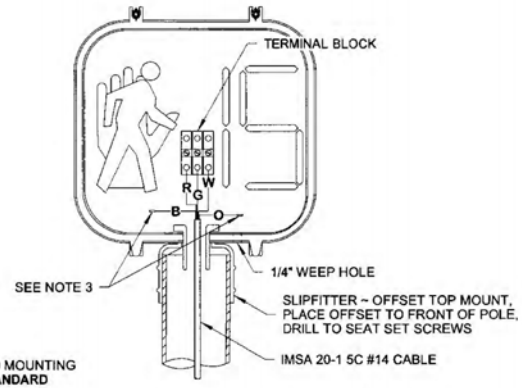

PEDESTRIAN SIGNAL WIRING DETAIL

(TYPE D MOUNTING SHOWN)

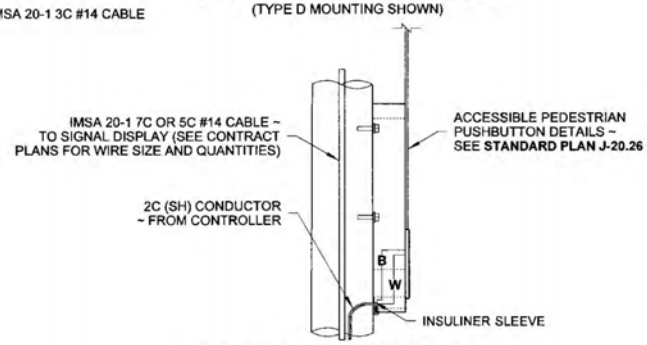

ACCESSIBLE PEDESTRIAN PUSHBUTTON WIRING DETAIL

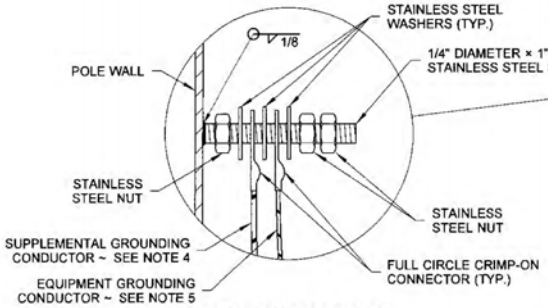

GROUNDING CONNECTION DETAIL

CONFIGURATIONS VARY AMONG DIFFERENT MANUFACTURERS (SHOWN EXPLODED FOR CLARITY)

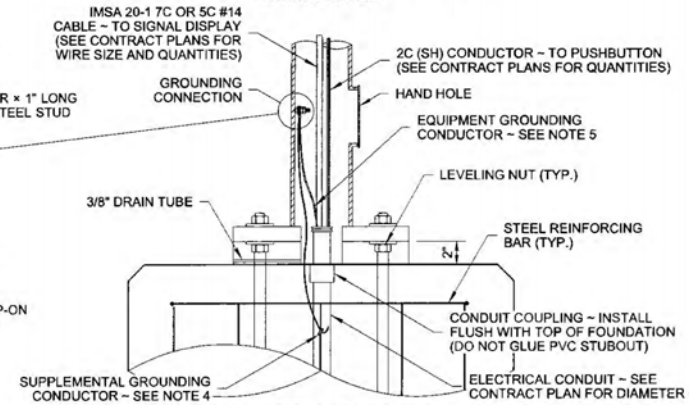

FOUNDATION WIRING DETAIL

DRAWN BY: LISA CYFORD

NOTES

1. See **Standard Plan J-21.10** for Signal Standard Foundation with Fixed Base and Slip Base details.
2. See **Standard Specification 9-29.3** for Cable Conductor requirements.
3. Install heat shrink caps on all spare conductors not terminated on a terminal strip.
4. Supplemental grounding conductor shall be non-insulated #4 AWG stranded copper and shall be clamped to vertical rebar with a connector suitable for use embedded in concrete: provide 3' - 0" min. slack. Attach to pole grounding stud with a full circle crimp-on connector (crimped with manufacturer's recommended crimper).
5. Equipment grounding conductor shall attach to grounding stud with a full circle crimp-on connector (crimped with a manufacurer's recommended crimper).

5C PEDESTRIAN HEAD TERMINATIONS		
TERMINAL NUMBER	COLOR CODE	USE
7 ★ 1	R	DON'T WALK DISPLAY
7 ★ 2	G	WALK DISPLAY
7 ★ 3	W	NEUTRAL CONDUCTOR
7 ★ 6	B	SPARE CONDUCTOR
7 ★ 7	O	SPARE CONDUCTOR

★ ASSOCIATED PHASE NUMBER

7C PEDESTRIAN HEAD TERMINATIONS		
TERMINAL NUMBER	COLOR CODE	USE
7 ★ 1	R	DON'T WALK DISPLAY
7 ★ 2	G	WALK DISPLAY
7 ★ 3	W	NEUTRAL CONDUCTOR
7 ★ 6	B	SPARE CONDUCTOR
7 ★ 1	O	DON'T WALK DISPLAY
7 ★ 2	BL	WALK DISPLAY
7 ★ 3	WB	NEUTRAL CONDUCTOR

★ ASSOCIATED PHASE NUMBER

THEODORE JOSEPH BOXTEL III
STATE OF WASHINGTON
39820
REGISTERED PROFESSIONAL ENGINEER

5-15-2013

PEDESTRIAN SIGNAL STANDARD (TYPE PS) ELECTRICAL DETAIL

STANDARD PLAN J-20.20-02

SHEET 1 OF 1 SHEET

APPROVED FOR PUBLICATION

STATE DESIGN ENGINEER — DATE 9/20/13

Washington State Department of Transportation

DRAWN BY: LISA CYFORD

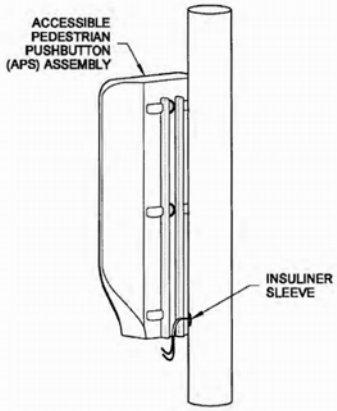

WIRE ROUTING
PERSPECTIVE VIEW

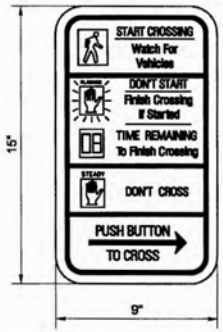

R10-3e (RIGHT)

R10-3e (LEFT)

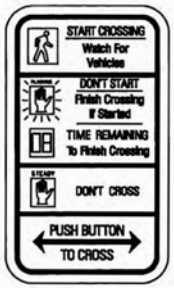

R10-3e (MOD.)

PEDESTRIAN PUSHBUTTON INSTRUCTIONAL SIGN

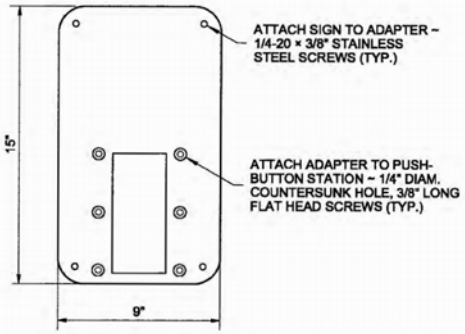

PEDESTRIAN PUSHBUTTON FRAME ADAPTER

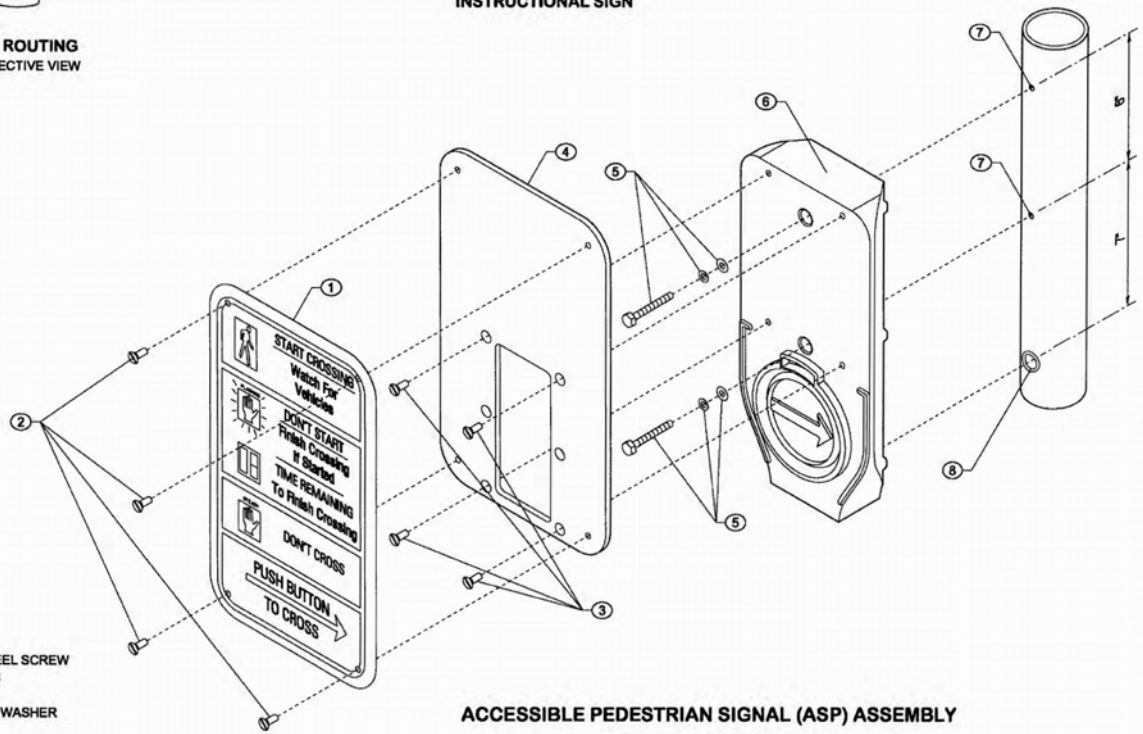

ACCESSIBLE PEDESTRIAN SIGNAL (ASP) ASSEMBLY

METAL POLE INSTALLATION
PPB-M

ISOMETRIC VIEW
(METAL POLE SHOWN)

KEY

1. FACE PLATE
2. 1/4-20 × 3/8" LONG STAINLESS STEEL SCREW
3. 1/4-20 STAINLESS STEEL SCREWS
4. PUSHBUTTON FRAME ADAPTER
5. 1/4-20 STAINLESS STEEL BOLT W/ WASHER AND LOCK WASHER
6. PUSHBUTTON STATION
7. DRILL AND TAP SHAFT FOR 1/4" DIAM. BOLT
8. DRILL AND TAP SHAFT FOR 5/8" WIRE GUIDE HOLE - ADD INSULINER

THEODORE JOSEPH BAILEY
STATE OF WASHINGTON
39820
REGISTERED
PROFESSIONAL ENGINEER

7/10/2012

ACCESSIBLE PEDESTRIAN PUSHBUTTON (PPB) DETAILS

STANDARD PLAN J-20.26-01

SHEET 1 OF 2 SHEETS

APPROVED FOR PUBLICATION

STATE DESIGN ENGINEER — DATE

Washington State Department of Transportation

DRAWN BY: LISA CYFORD

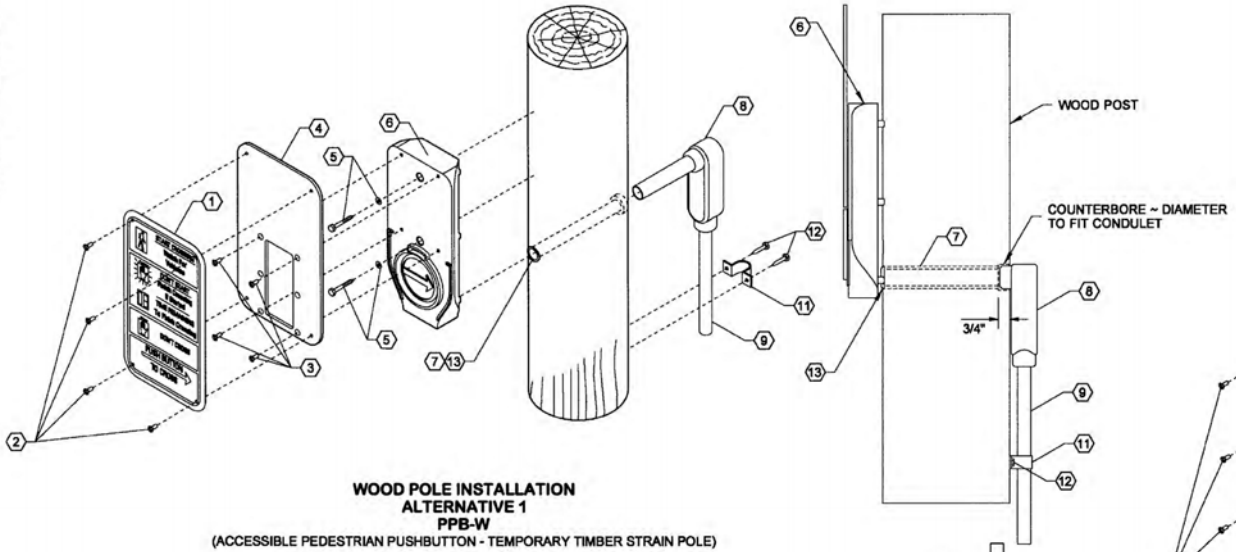

WOOD POLE INSTALLATION
ALTERNATIVE 1
PPB-W
(ACCESSIBLE PEDESTRIAN PUSHBUTTON - TEMPORARY TIMBER STRAIN POLE)

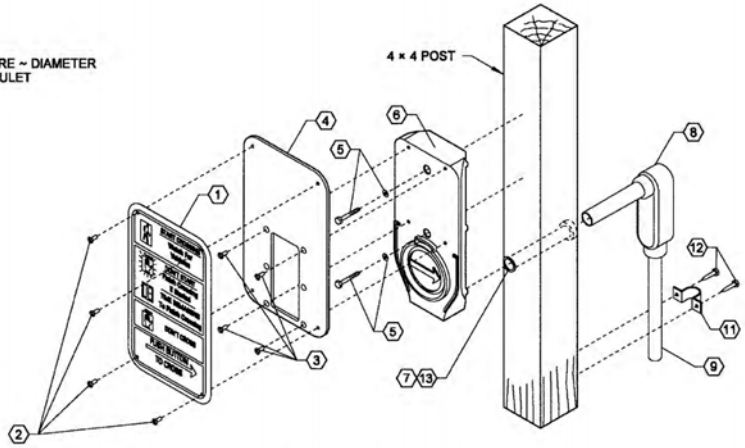

WOOD POLE INSTALLATION
ALTERNATIVE 3
PPB-W
(ACCESSIBLE PEDESTRIAN PUSHBUTTON - TEMPORARY TIMBER POLE)

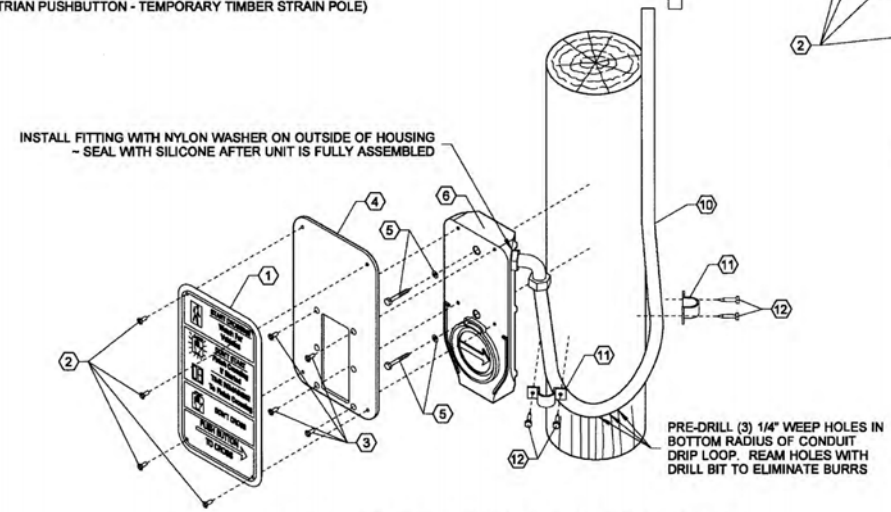

ACCESSIBLE PEDESTRIAN SIGNAL (ASP) ASSEMBLY

WOOD POLE INSTALLATION
ALTERNATIVE 2
PPB-W
(ACCESSIBLE PEDESTRIAN PUSHBUTTON - TEMPORARY TIMBER STRAIN POLE)

TEMPORARY TIMBER POLE

KEY

1. FACE PLATE
2. 1/4-20 × 3/8" LONG STAINLESS STEEL SCREW
3. 1/4-20 STAINLESS STEEL SCREWS
4. PUSHBUTTON FRAME ADAPTER
5. LAG BOLT WITH WASHER
6. PUSHBUTTON STATION
7. CONDUIT DIAMETER + 1/8" HOLE THRU POLE
8. CONDULET
9. 3/4" CONDUIT
10. LIQUID-TITE FLEX CONDUIT
11. ONE PIECE TWO HOLE CLAMP
12. LAG BOLT
13. INSULINER SLEEVE

THEODORE JOSEPH BAILEY
STATE OF WASHINGTON
39820
REGISTERED
PROFESSIONAL ENGINEER

7/10/2012

ACCESSIBLE PEDESTRIAN PUSHBUTTON (PPB) DETAILS

STANDARD PLAN J-20.26-01

SHEET 2 OF 2 SHEETS

APPROVED FOR PUBLICATION

STATE DESIGN ENGINEER — DATE 7/12/12

Washington State Department of Transportation

REINFORCING STEEL BENDING DIAGRAM

SEE **STD. SPEC. 9-07.1(2)** FOR BENDING DIAM.

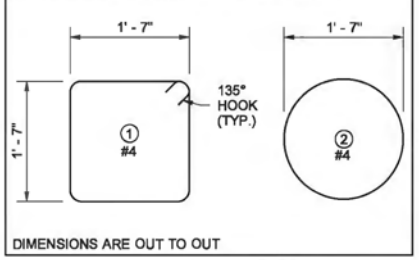

DIMENSIONS ARE OUT TO OUT

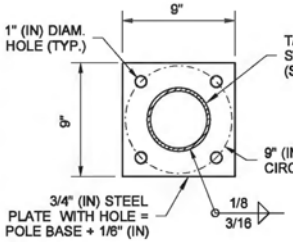

BASE PLATE DETAIL

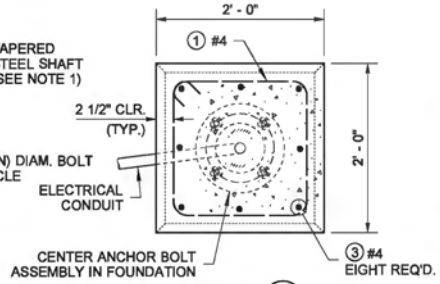

SECTION (B)

NOTES

1. Clamping bolts shall be tightened to 50 ft-lbs max. torque. After state inspection, burr threads to prevent nut rotation. DO NOT OVERTIGHTEN.
2. The final height of the Anchor Bolts shall be below the top of the slip plate assembly to ensure proper function of the slip base.
3. Supplemental grounding conductor shall be non-insulated #4 AWG stranded copper and shall be clamped to vertical rebar with a connector suitable for use embedded in concrete; Provide 3' - 0" min. slack. Attach to pole grounding stud with a full circle crimp-on connector (crimped with a manufacturer recommended crimper).
4. Junction box serving the Standard shall preferably be located 5' - 0" (10' - 0" Max.) from the Standard.
5. Provide cable tie at wiring entering the junction box (for slip base installations only) ~ See **Detail A, Standard Plan J-28.70**.
6. Keeper Plate shall not extend beyond the edges of the pole base plate.

DRAWN BY: FERN LIDDELL

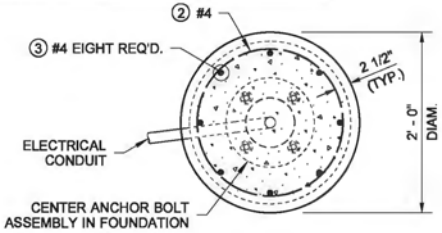

SECTION (A)

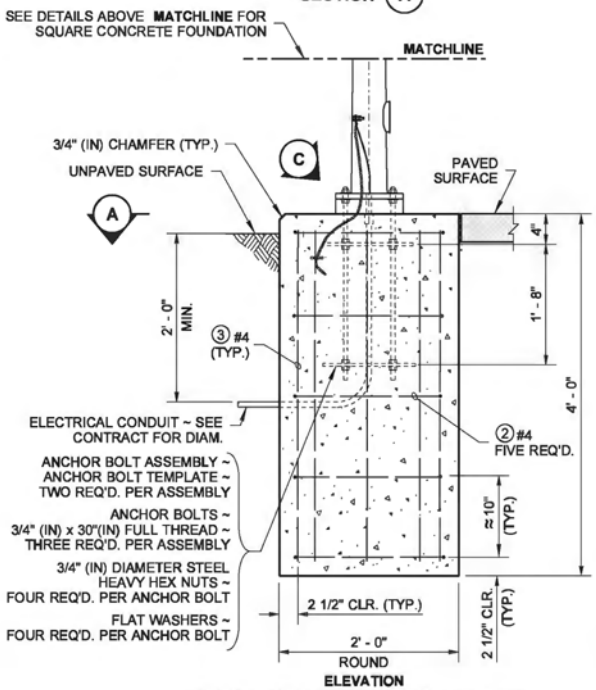

ELEVATION

ROUND CONCRETE FOUNDATION DETAIL

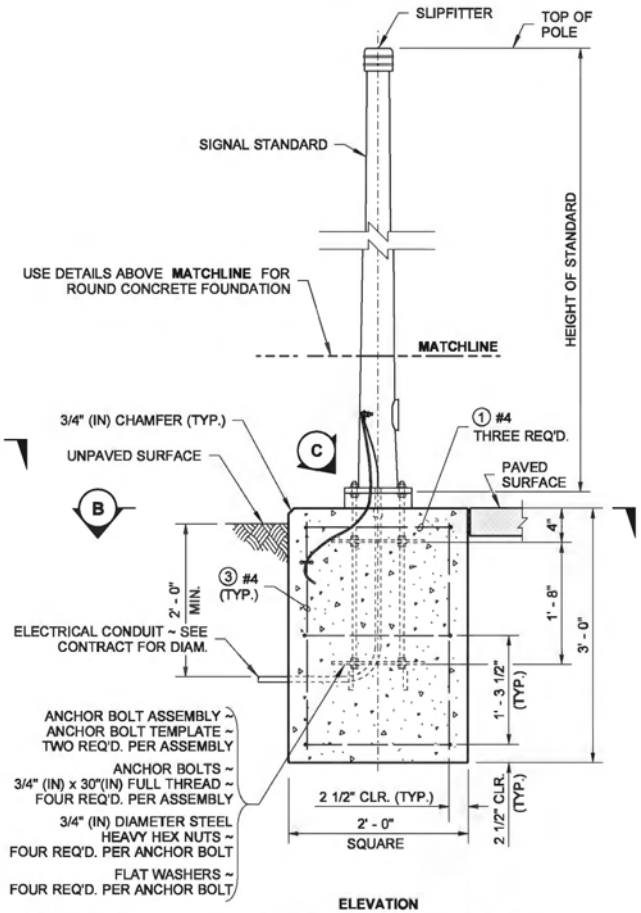

ELEVATION

FIXED BASE SQUARE CONCRETE FOUNDATION DETAIL

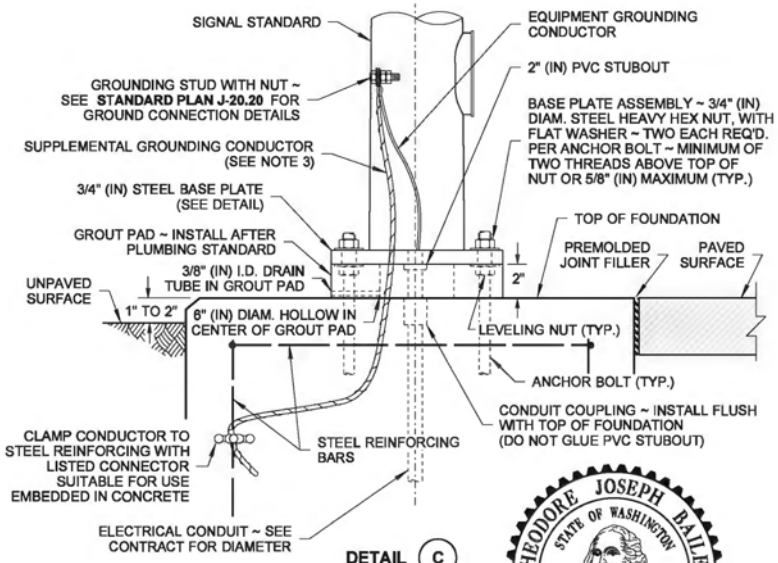

DETAIL (C)

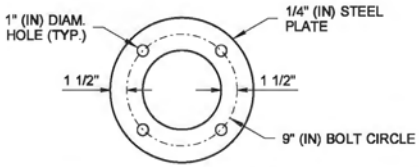

ANCHOR BOLT TEMPLATE

THEODORE JOSEPH BAILEY — STATE OF WASHINGTON — 39820 — REGISTERED PROFESSIONAL ENGINEER

Theodore Joseph Bailey — Bailey, Ted — Jun 26 2014 4:29 PM

TYPE PS, TYPE 1, RM & FB SIGNAL STANDARD FOUNDATION DETAILS

STANDARD PLAN J-21.10-04

SHEET 1 OF 2 SHEETS

APPROVED FOR PUBLICATION — Bakotich, Pasco — Jun 30 2014 3:12 PM

STATE DESIGN ENGINEER

Washington State Department of Transportation

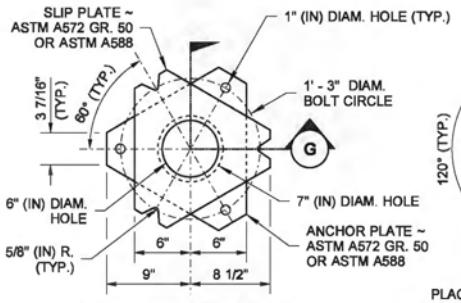

FOR DIMENSIONS NOT SHOWN, SEE BASE PLATE DETAIL

SLIP AND ANCHOR PLATES DETAIL

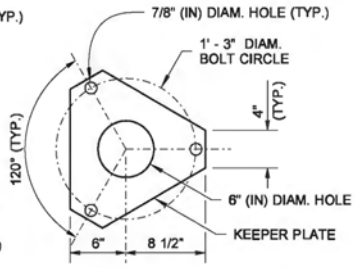

(28 GAGE SHEET METAL) PLACE BETWEEN POLE BASE PLATE AND SLIP PLATE ON TOP OF MIDDLE WASHERS ~ SEE **STANDARD PLAN J-28.42**

KEEPER PLATE DETAIL

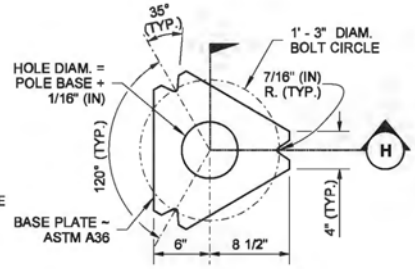

FOR DIMENSIONS NOT SHOWN, SEE SLIP AND ANCHOR PLATES DETAIL

BASE PLATE DETAIL

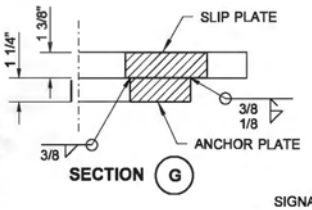

SECTION G

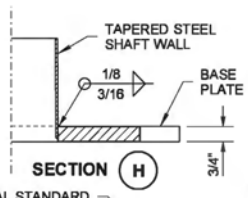

SECTION H

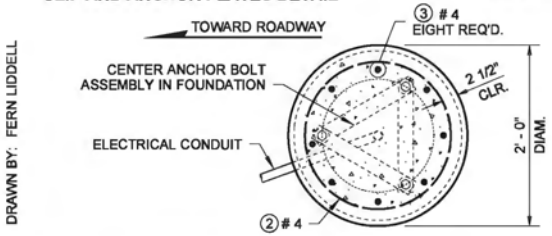

SECTION D

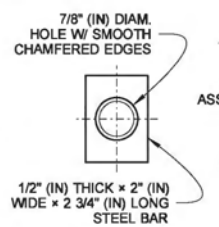

PLATE WASHER DETAIL

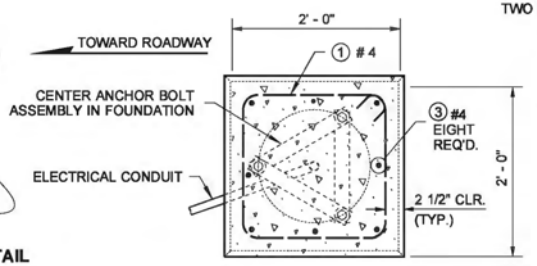

SECTION E

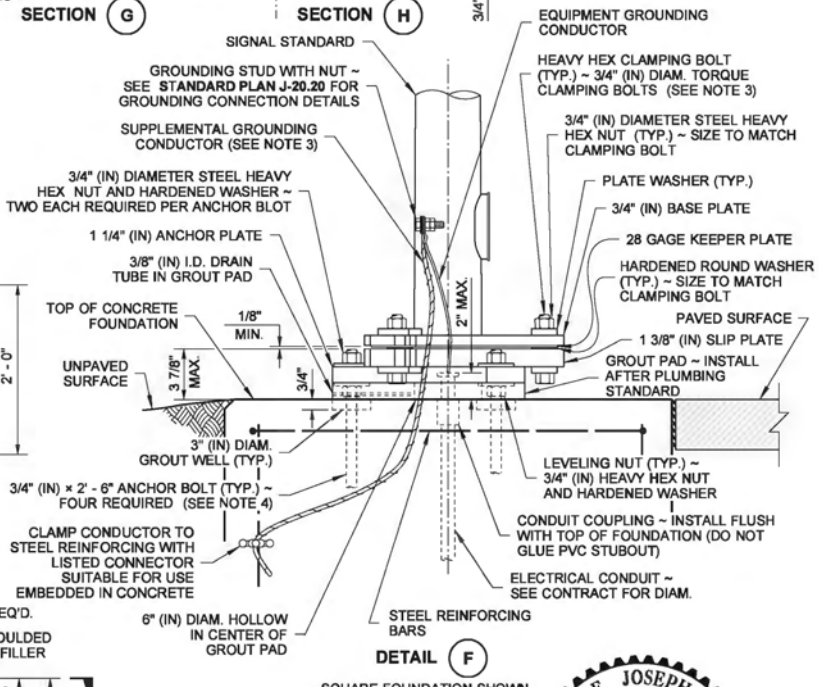

DETAIL F

SQUARE FOUNDATION SHOWN

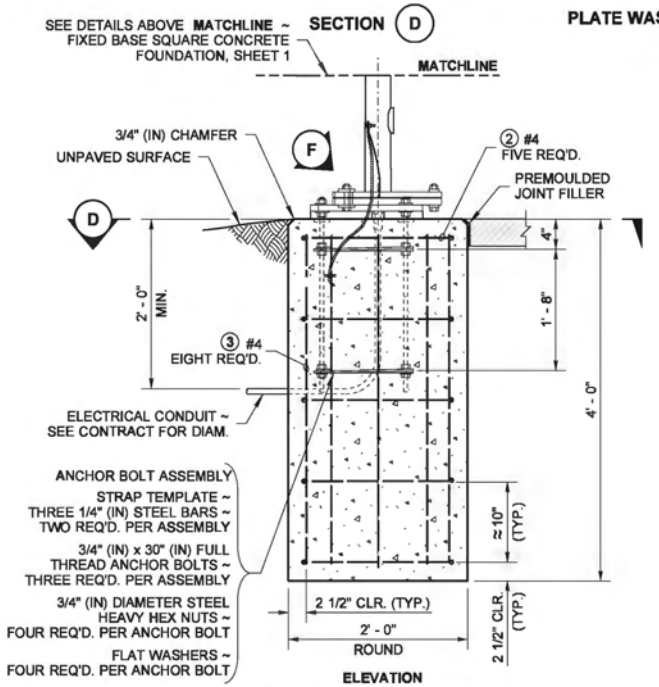

ELEVATION

ROUND CONCRETE FOUNDATION DETAIL

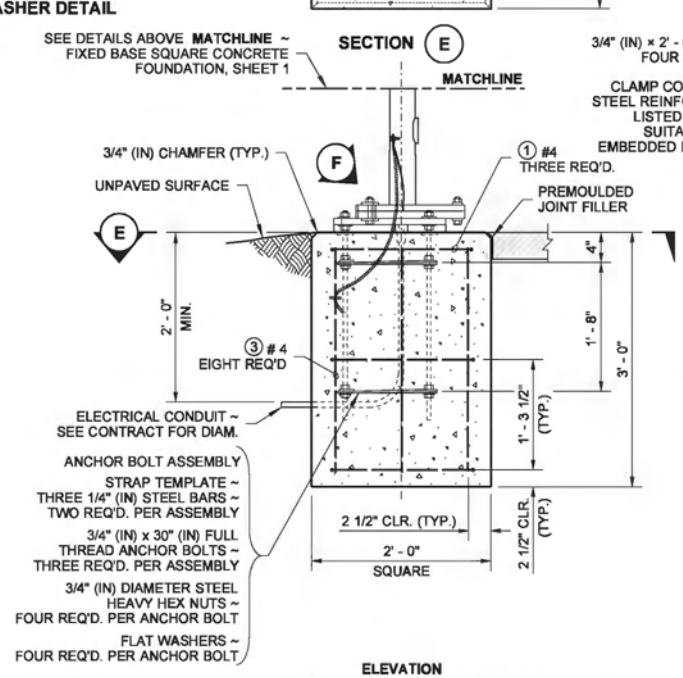

ELEVATION

SLIP BASE

SQUARE CONCRETE FOUNDATION DETAIL

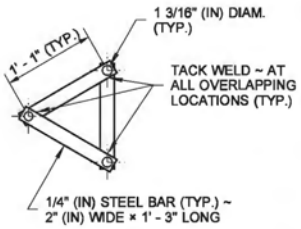

STRAP TEMPLATE DETAIL

DRAWN BY: FERN LIDDELL

THEODORE JOSEPH BAILEY — STATE OF WASHINGTON — 39820 — REGISTERED PROFESSIONAL ENGINEER

Theodore Joseph Bailey — Bailey, Ted — Jun 26 2014 4:29 PM

TYPE PS, TYPE 1, RM & FB SIGNAL STANDARD FOUNDATION DETAILS

STANDARD PLAN J-21.10-04

SHEET 2 OF 2 SHEETS

APPROVED FOR PUBLICATION

Bakotich, Pasco — Jun 30 2014 3:13 PM

STATE DESIGN ENGINEER

Washington State Department of Transportation

DRAWN BY: FERN LIDDELL

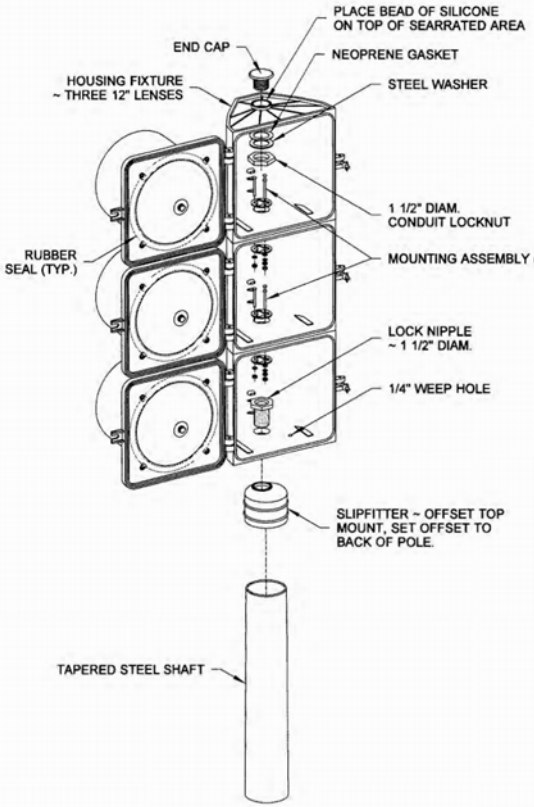

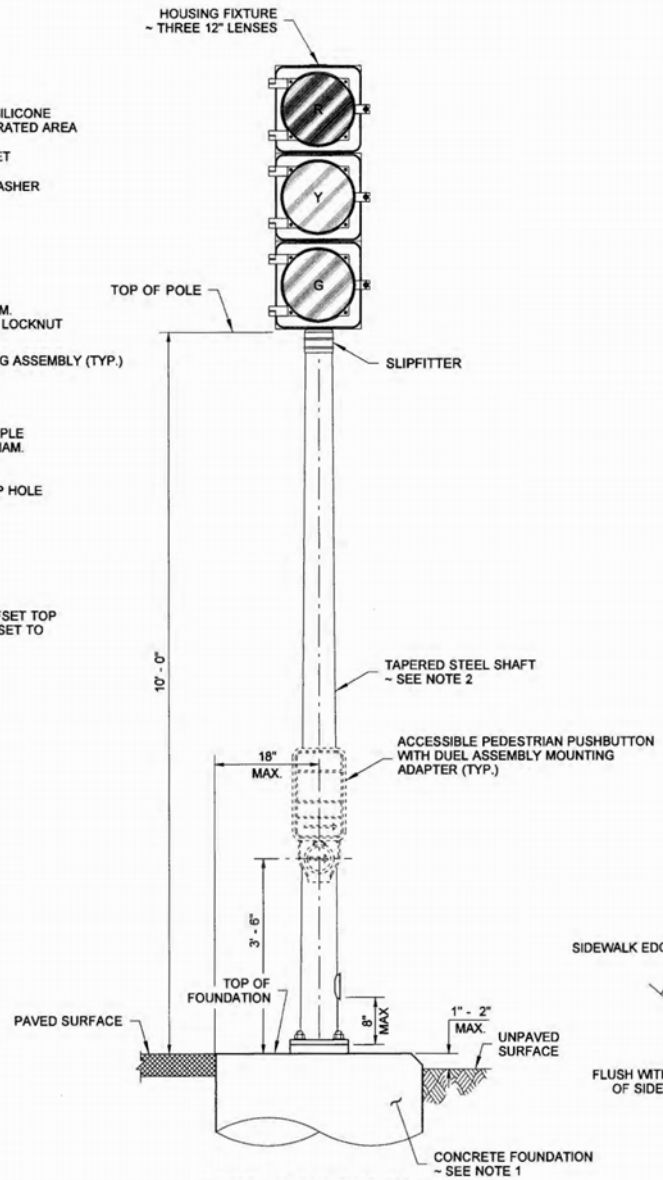

TYPE 1 SIGNAL STANDARD

FIXED BASE SHOWN

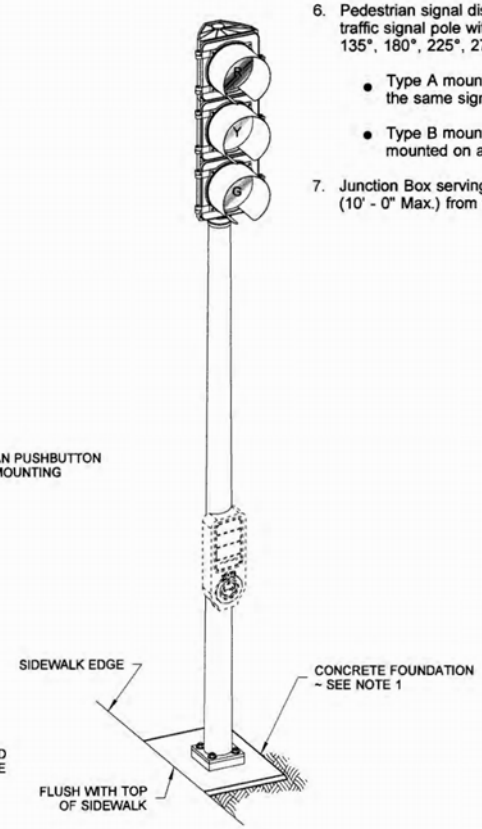

ISOMETRIC VIEW

NOTES

1. See **Standard Plan J-21.10** for Signal Standard Foundation with Fixed Base and Slip Base details.
2. Steel shaft shall be tapered either round or dodecagon (12 sided), 11 gage, 4 1/2" O.D. at slipfitter. Taper shall be 0.14 inches per foot.
3. All poles shall be hot dip galvanized per AASHTO M111.
4. Welding of structures shall be in accordance with the latest edition of the AWS D1.1 Structural Welding Code - Steel. All butt welds shall be ground flush with base metal.
5. See **Standard Plan J-21.20** for Electrical details.
6. Pedestrian signal displays mounted on the side of an octagonal (8 sided) traffic signal pole with a pole attachment angle other than 0°, 45°, 90°, 135°, 180°, 225°, 270°, or 315° shall utilize:
   - Type A mounting when two pedestrian heads are installed on the same signal pole.
   - Type B mounting when only one pedestrian signal head is mounted on a signal pole.
7. Junction Box serving the Standard shall preferably be located 5' - 0" (10' - 0" Max.) from the Standard.

THEODORE JOSEPH BAILEY
STATE OF WASHINGTON
39820
REGISTERED PROFESSIONAL ENGINEER

6/6/2013

TYPE 1 SIGNAL STANDARD DETAILS

STANDARD PLAN J-21.15-01

SHEET 1 OF 1 SHEET

APPROVED FOR PUBLICATION

STATE DESIGN ENGINEER — DATE 6/10/13

Washington State Department of Transportation

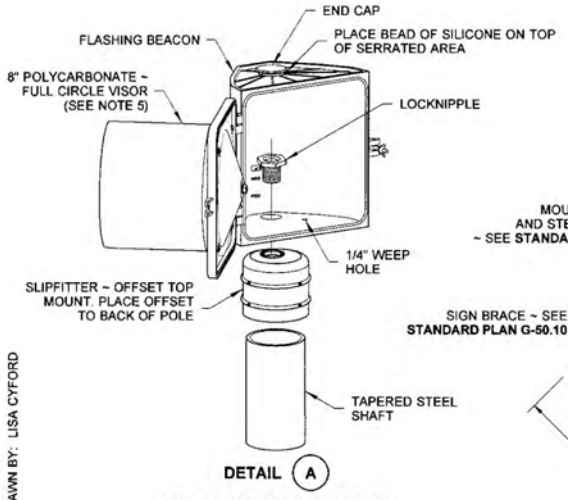

DETAIL (A)

SINGLE FLASHING BEACON DETAIL

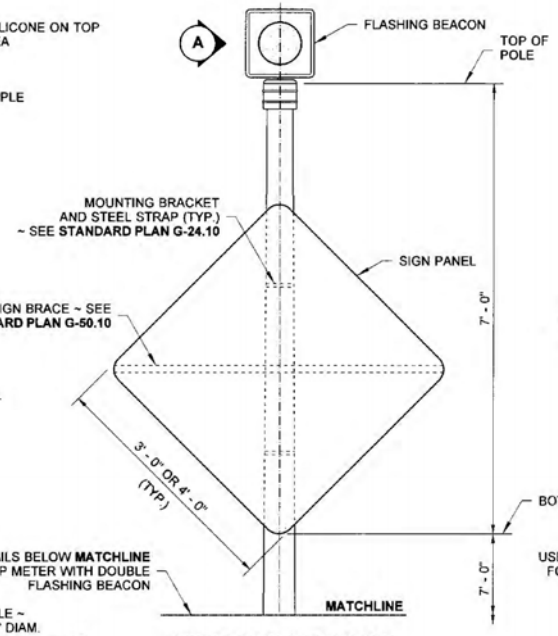

SINGLE FLASHING BEACON

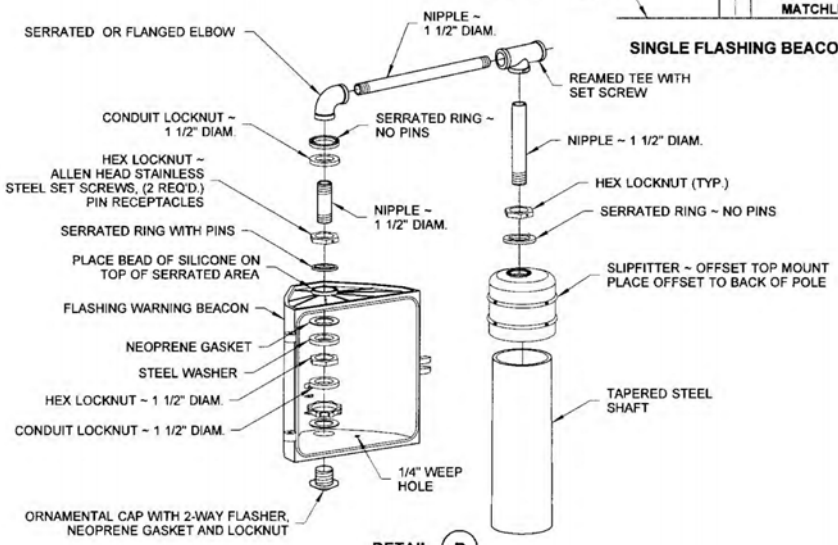

DETAIL (B)

ALTERNATING FLASHING BEACON DETAIL

(SHOWN WITHOUT HINGE DOOR FOR CLARITY)

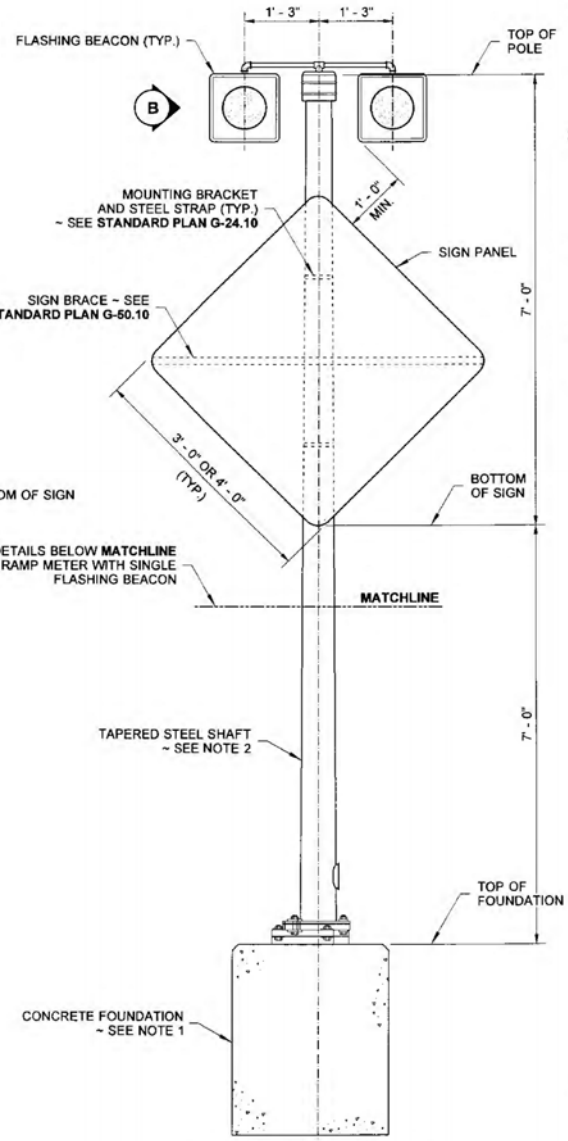

ALTERNATING FLASHING BEACON

FLASHING BEACON TYPE 1

SLIP BASE SHOWN

NOTES

1. See **Standard Plan J-21.10** for Signal Standard Foundation details.
2. All poles shall be hot dip galvanized per AASHTO M111.
3. Welding of structures shall be in accordance with the latest edition of the AWS D1.1 Structural Welding Code - Steel. All butt welds shall be ground flush with base metal.
4. Visor shall be 8" Polycarbonate, fully enclosed circle at bottom to reduce glare on sign. Display shall be of appropriate color needed.
5. See **Standard Plan J-21.17** for Electrical details.
6. Junction Box serving the Standard shall preferably be located 5' - 0" (10' - 0" Max.) from the Standard.

6/6/13

FLASHING BEACON TYPE 1 SIGNAL STANDARD DETAILS

STANDARD PLAN J-21.16-01

SHEET 1 OF 1 SHEET

APPROVED FOR PUBLICATION

STATE DESIGN ENGINEER — DATE 6/10/13

Washington State Department of Transportation

DRAWN BY: LISA CYFORD

DRAWN BY: FERN LIDDELL

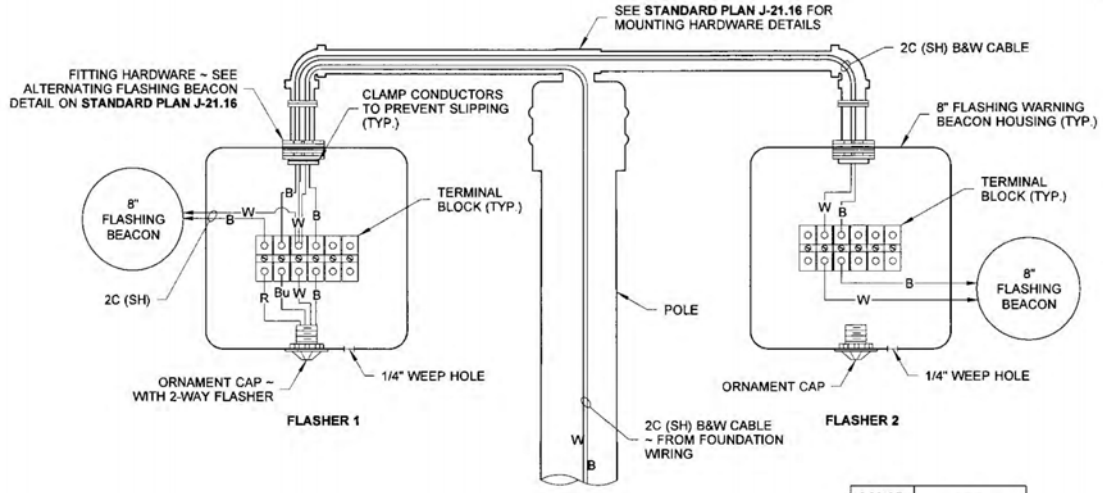

DETAIL (A)

FLASHING BEACON WIRING

ALTERNATING FLASH WIRING SHOWN

COLOR CODE	USE
B	POWER
W	NEUTRAL
R	FLASHER 1
Bu	FLASHER 2

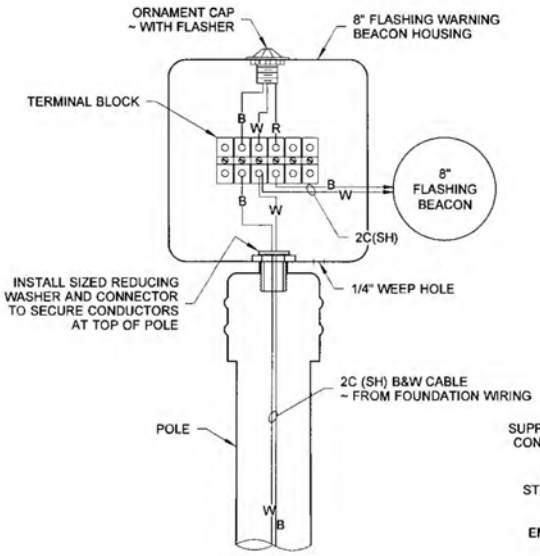

DETAIL (B)

FLASHING BEACON WIRING

SINGLE FLASH WIRING SHOWN

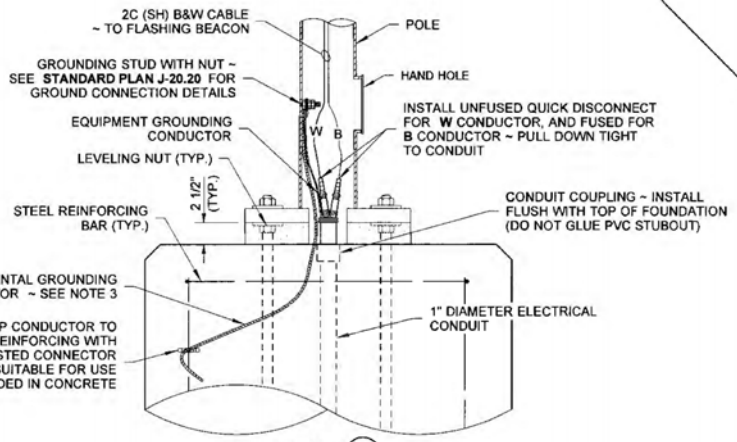

DETAIL (C)

FOUNDATION WIRING

FIXED BASE SHOWN

NOTES

1. See **Standard Specification 9-29.3** for Cable Conductor requirements.
2. See **Standard Plan J-21.16** for Flashing Beacon Type 1 Signal Standard details.
3. Supplemental Grounding Conductor shall be non-insulated #4 AWG stranded copper, provide 3' - 0" min. slack. Clamp to vertical steel reinforcing bar with listed connector suitable for use embedded in concrete.
4. See **Standard Plan J-21.10** for foundation requirements.
5. Provide Cable Tie at wiring entering the Junction Box (for Slip Base installations only) ~ See **Detail A, Standard Plan J-28.70**.

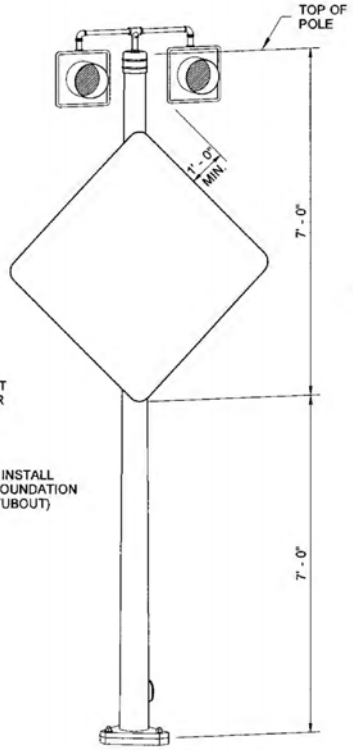

PERSPECTIVE VIEW

FLASHING BEACON TYPE 1

ALTERNATING FLASH BEACON SHOWN

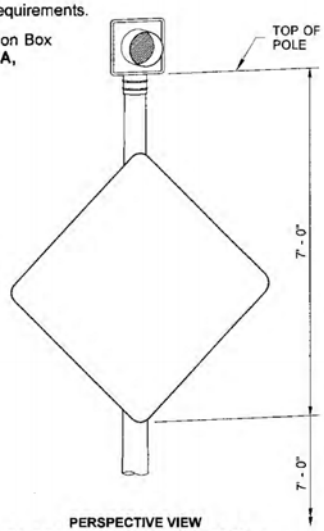

PERSPECTIVE VIEW

FLASHING BEACON TYPE 1

SINGLE FLASH BEACON SHOWN

THEODORE JOSEPH BAILEY
STATE OF WASHINGTON
39820
REGISTERED PROFESSIONAL ENGINEER

6/6/13

FLASHING BEACON TYPE 1 SIGNAL STANDARD ELECTRICAL DETAILS

STANDARD PLAN J-21.17-01

SHEET 1 OF 1 SHEET

APPROVED FOR PUBLICATION

STATE DESIGN ENGINEER — DATE 6/6/13

Washington State Department of Transportation

DRAWN BY: FERN LIDDELL

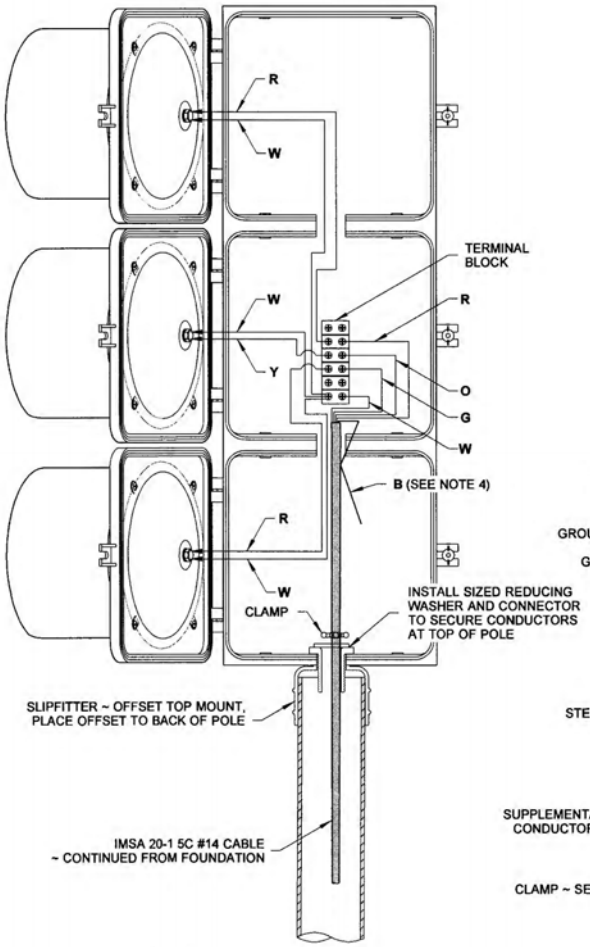

SIGNAL WIRING DETAIL

TERMINAL NUMBER	MARK	DEFINITION
6★1	R	RED DISPLAY
6★2	O	AMBER DISPLAY
6★3	G	GREEN DISPLAY
6★4	B	SPARE CONDUCTOR
6★6	W	NEUTRAL CONDUCTOR

★ ASSOCIATED PHASE NUMBER

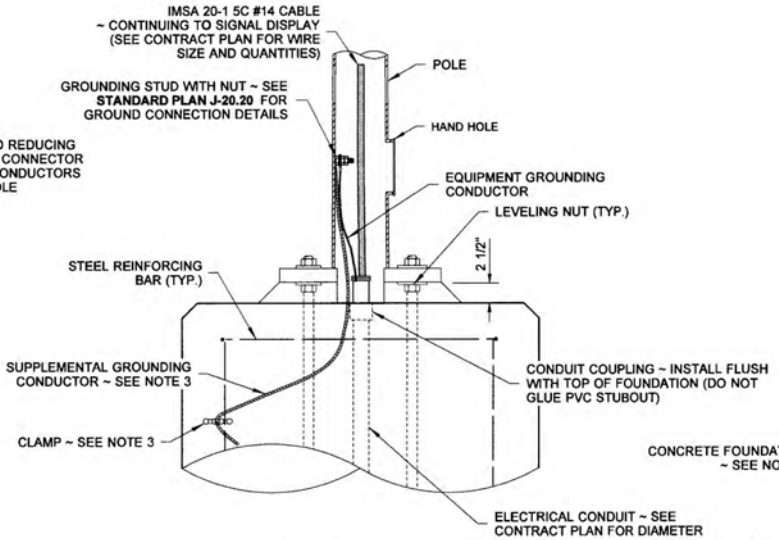

FOUNDATION WIRING DETAIL

NOTES

1. See **Standard Specification 9-29.3** for Cable Conductor requirements.
2. See **Standard Plan J-21.10** for Signal Standard Foundation with Fixed Base and Slip Base details.
3. Supplemental Grounding Conductor shall be non-insulated #4 AWG stranded copper, provide 3' - 0" min. slack. Clamp to steel reinforcing bar with connector suitable for use embedded in concrete.
4. Heat shrink cap all spare conductors not terminated on a terminal strip.
5. When a Pedestrian Push Button is specified in contract plans, see **Standard Plan J-20.20** for details.
6. Provide Cable Tie at wiring entering the Junction Box (for Slip Base installations only) ~ See **Detail A, Standard Plan J-28.70**.

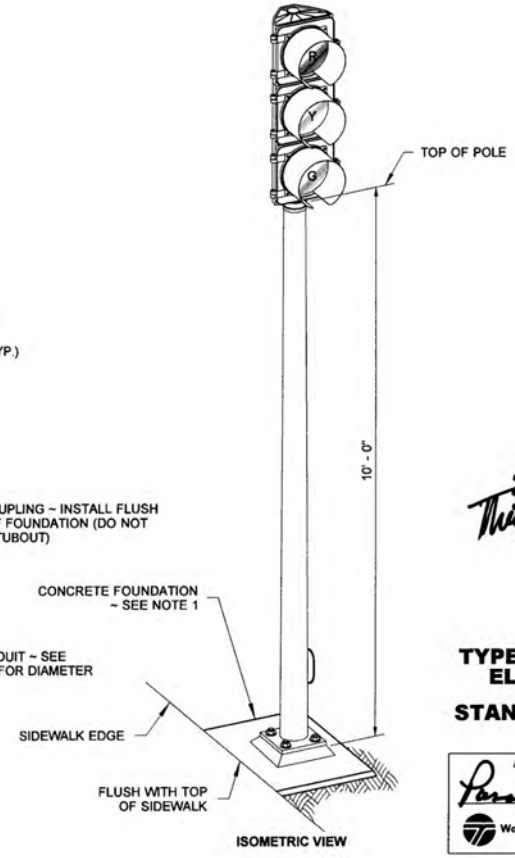

ISOMETRIC VIEW

THEODORE JOSEPH BEATTY
STATE OF WASHINGTON
39820
REGISTERED
PROFESSIONAL ENGINEER

6/6/13

TYPE 1 SIGNAL STANDARD ELECTRICAL DETAILS

STANDARD PLAN J-21.20-01

SHEET 1 OF 1 SHEET

APPROVED FOR PUBLICATION

STATE DESIGN ENGINEER — DATE 6/6/13

Washington State Department of Transportation

DRAWN BY: COLBY FLETCHER

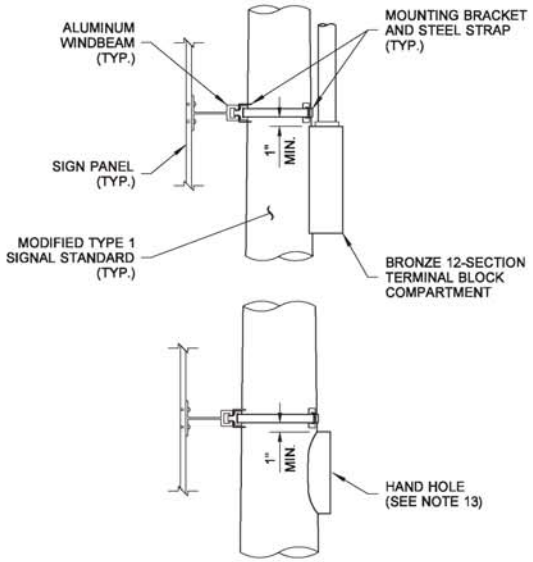

SIGN PLACEMENT DETAIL
(SEE NOTE 9)

1 **BACKPLATES NOT SHOWN FOR CLARITY.**

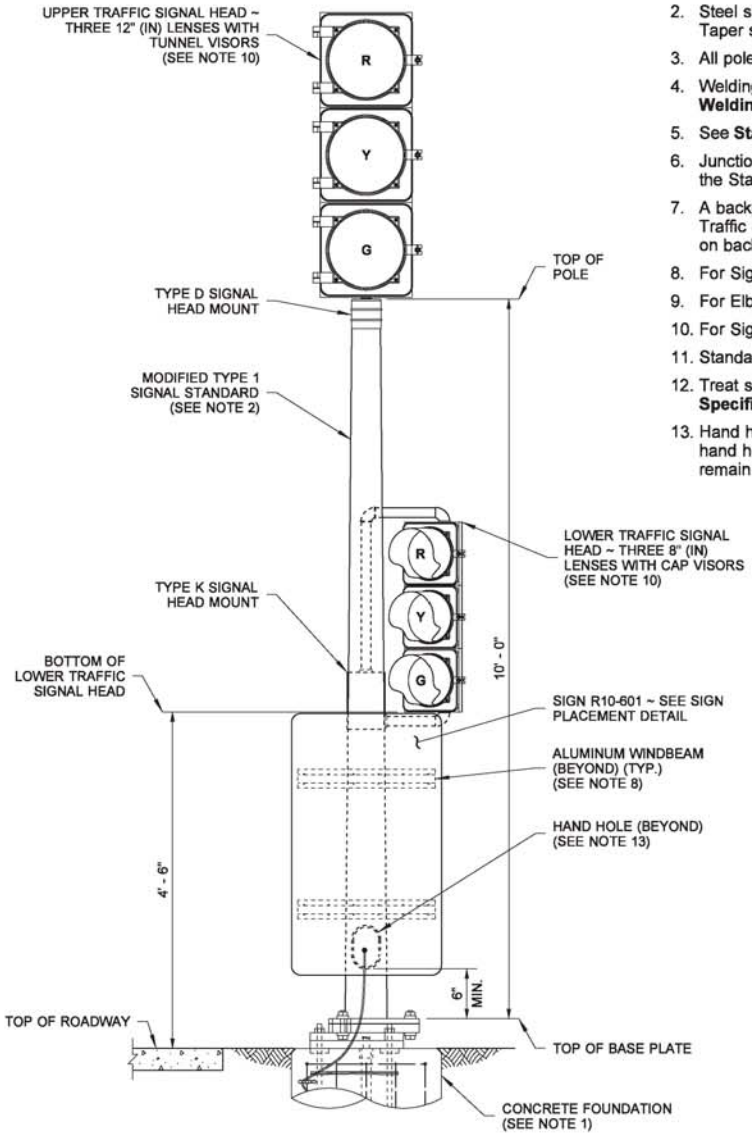

RAMP METER SIGNAL STANDARD 1
SLIP BASE SHOWN

NOTES

1. See **Standard Plan J-21.10** for Signal Standard Foundation Details.
2. Steel shaft shall be tapered either round or dodecagon (12-sided), 11-gage, 4 1/2" (in) O.D. at slipfitter. Taper shall be 0.14" (in) per foot.
3. All poles shall be hot-dip galvanized per **AASHTO M111**.
4. Welding of structures shall be in accordance with the latest edition of the **AWS D1.1 Structural Welding Code - Steel**. All butt welds shall be ground flush with base metal.
5. See **Standard Plan J-22.16** for Wiring and Electrical Details.
6. Junction Box serving the Standard shall be located no more than 10' - 0" (5' - 0" preferred) from the Standard.
7. A backplate shall be installed on the Upper Traffic Signal Head. Install a backplate on the Lower Traffic Signal Head only when required by the contract. Do not install retro-reflective tape on backplates.
8. For Sign Installation Details, see **Standard Plan G-30.10**.
9. For Elbow Mounting Details, see **Standard Plan J-28.45**. Verify barrier angle prior to fabricating elbow.
10. For Signal Head Mounting Details, see **Standard Plan J-75.10**.
11. Standard shall use slip base if installed closer than 4' (ft) from the face of guardrail.
12. Treat surrounding pole with galvanizing repair paint meeting the requirements of **Standard Specification 9-08.1(2)**. Apply two coats. Paint shall be dry before applying second coat.
13. Hand hole shall face toward roadway for Elbow Mount Barrier installations. For all other installations, hand hole shall face the opposite direction from the Upper Traffic Signal Head. Hand hole face shall remain accessible after pole and sign installation is complete.

PERSPECTIVE VIEW

THEODORE JOSEPH BAILEY
STATE OF WASHINGTON
39820
REGISTERED PROFESSIONAL ENGINEER

Theodore Joseph Bailey Bailey, Ted Jul 8 2015 3:06 PM

RAMP METER SIGNAL STANDARD DETAILS

STANDARD PLAN J-22.15-02

SHEET 1 OF 3 SHEETS

APPROVED FOR PUBLICATION
Carpenter, Jeff
Jul 10 2015 7:20 AM
STATE DESIGN ENGINEER

Washington State Department of Transportation

DRAWN BY: COLBY FLETCHER

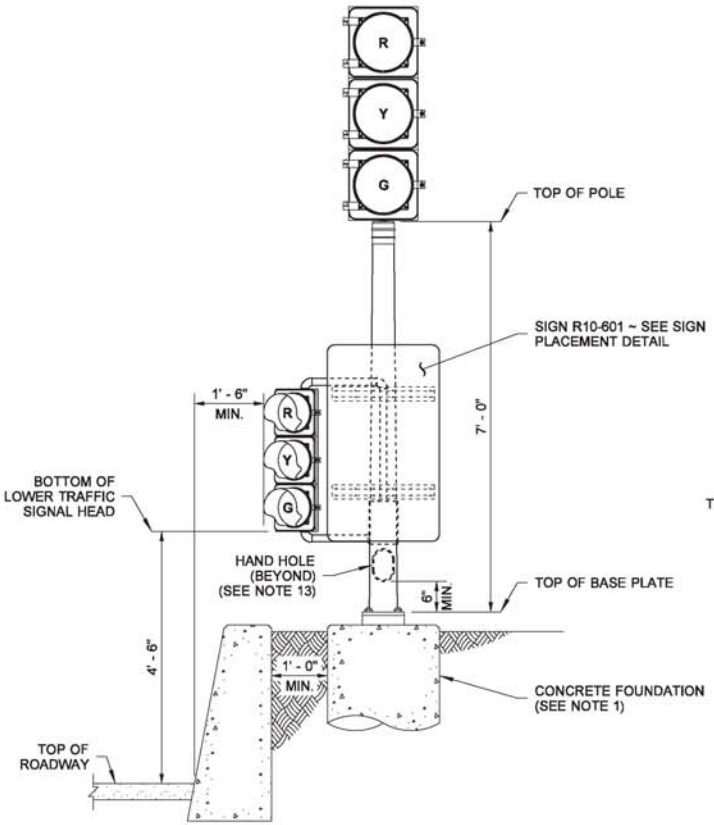

CUT SECTION BEHIND BARRIER ①
(GROUND-MOUNTED)

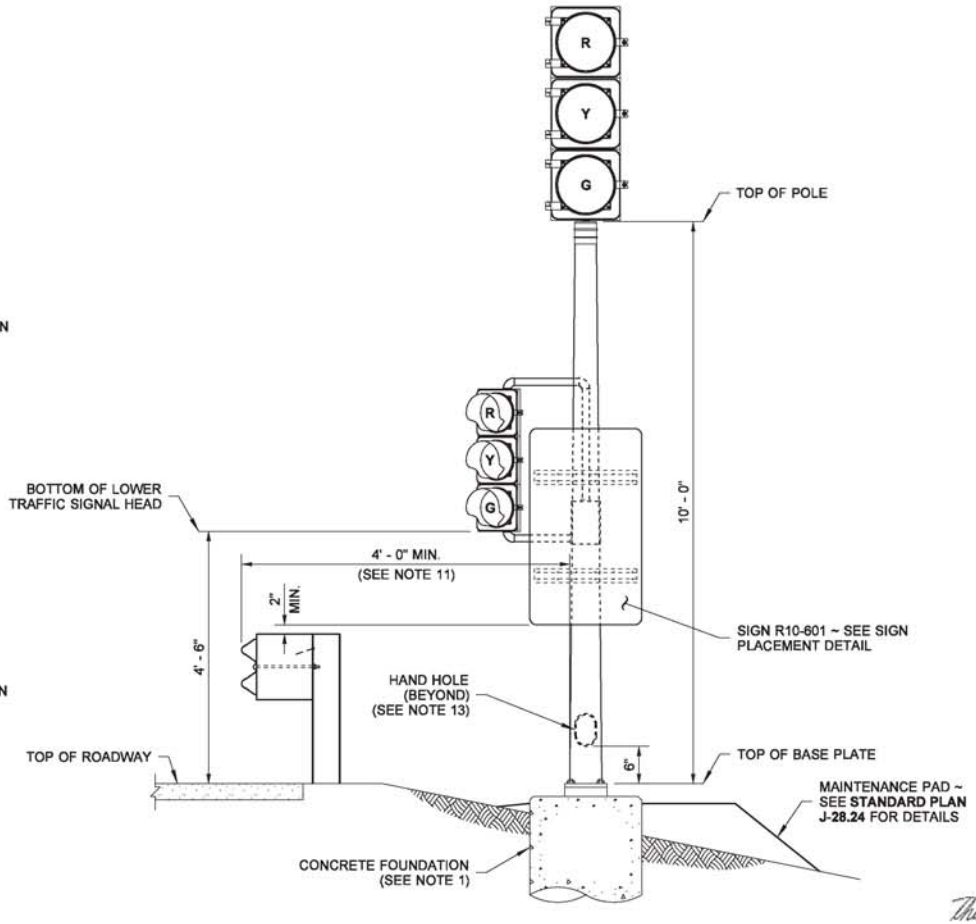

EMBANKMENT SECTION BEHIND BEAM GUARDRAIL ①
(GROUND-MOUNTED)

① **BACKPLATES NOT SHOWN FOR CLARITY.**

THEODORE JOSEPH BAILEY
STATE OF WASHINGTON
39820
REGISTERED
PROFESSIONAL ENGINEER

Theodore Joseph Bailey
Bailey, Ted
Jul 8 2015 3:07 PM

RAMP METER SIGNAL STANDARD DETAILS

STANDARD PLAN J-22.15-02

SHEET 2 OF 3 SHEETS

APPROVED FOR PUBLICATION
Carpenter, Jeff
Jul 10 2015 7:20 AM
STATE DESIGN ENGINEER

Washington State Department of Transportation

DRAWN BY: COLBY FLETCHER

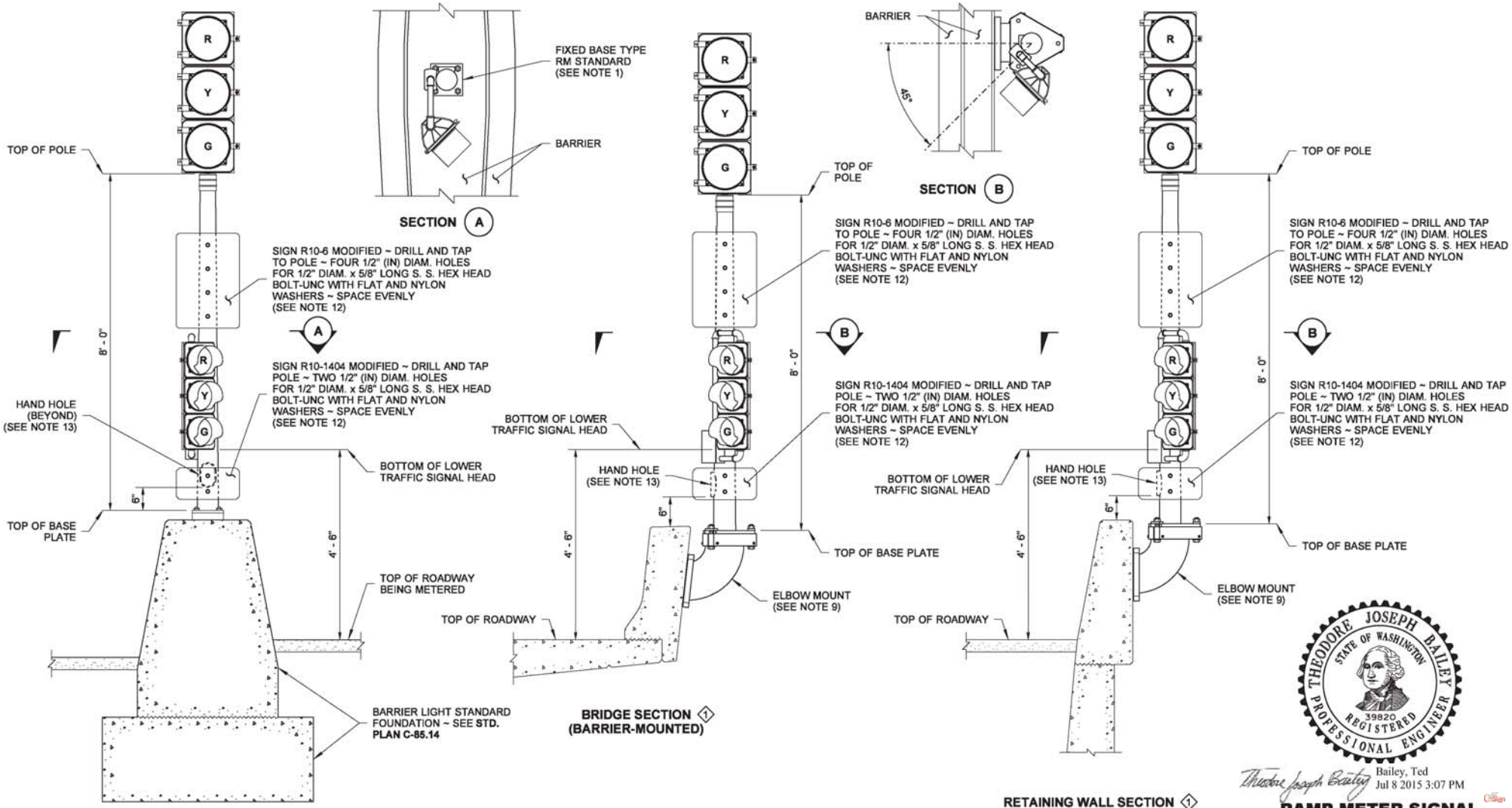

GRADE SEPARATION SECTION ① (BARRIER FOUNDATION-MOUNTED)

BRIDGE SECTION ① (BARRIER-MOUNTED)

RETAINING WALL SECTION ① (BARRIER-MOUNTED)

① BACKPLATES NOT SHOWN FOR CLARITY.

THEODORE JOSEPH BAILEY
STATE OF WASHINGTON
39820
REGISTERED PROFESSIONAL ENGINEER

Theodore Joseph Bailey Bailey, Ted
Jul 8 2015 3:07 PM

RAMP METER SIGNAL STANDARD DETAILS

STANDARD PLAN J-22.15-02

SHEET 3 OF 3 SHEETS

APPROVED FOR PUBLICATION
Carpenter, Jeff
Jul 10 2015 7:20 AM
STATE DESIGN ENGINEER

Washington State Department of Transportation

DRAWN BY: FERN LIDDELL

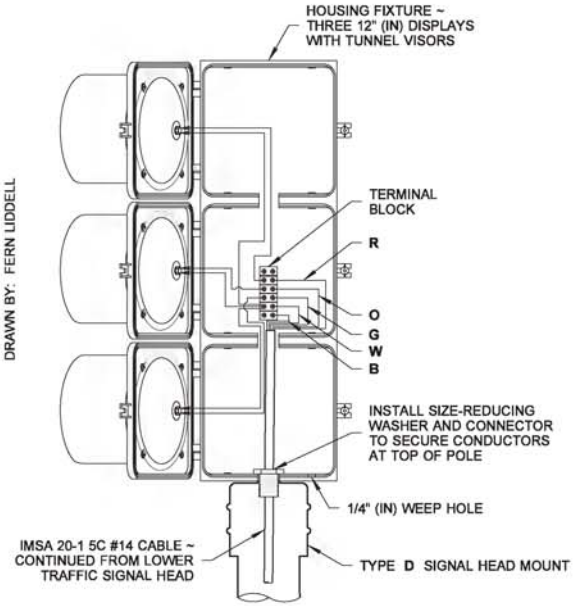

DETAIL A

UPPER TRAFFIC SIGNAL HEAD WIRING
(BACKPLATE NOT SHOWN FOR CLARITY)

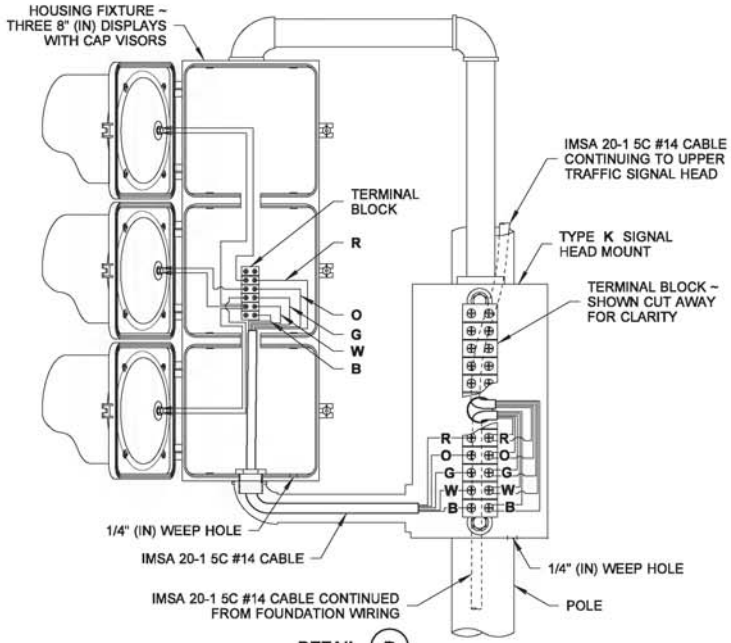

DETAIL B

LOWER TRAFFIC SIGNAL HEAD WIRING
(SHOWN LARGER FOR CLARITY)

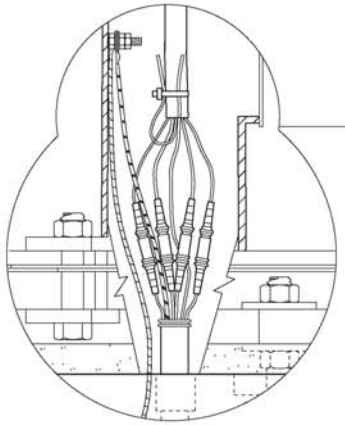

WIRING DETAIL

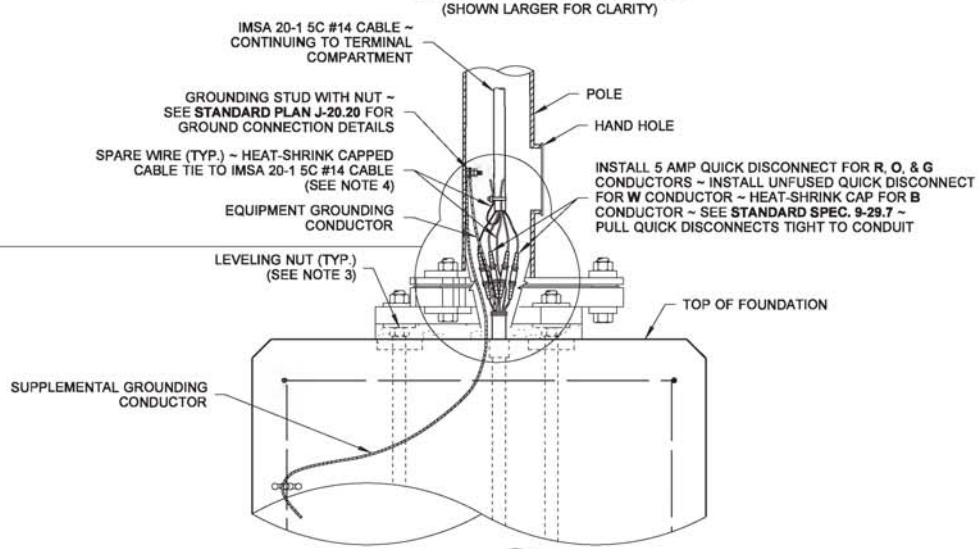

DETAIL C

FOUNDATION WIRING

NOTES

1. See **Standard Plan J-21.10** for Ramp Meter Signal Standard and Foundation Details.
2. See **Standard Specification 9-29.17** for additional Mounting Bracket and Fitting information not shown.
3. Top of Leveling Nut height shall be 1" (in) max. above foundation.
4. Heat-shrink cap for all spare conductors not terminated on a terminal strip.
5. Provide Cable Tie at wiring entering the Junction Box (Slip Base installations only). See **Detail A, Standard Plan J-28.70**.

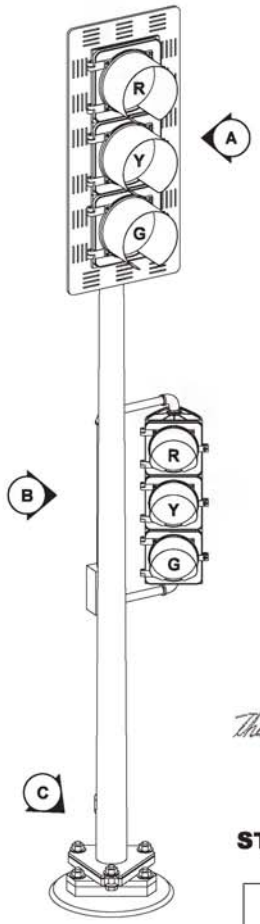

PERSPECTIVE VIEW
RAMP METER

COLOR CODE	USE
R	RED DISPLAY
O	AMBER DISPLAY
G	GREEN DISPLAY
W	NEUTRAL CONDUCTOR
B	SPARE CONDUCTOR

THEODORE JOSEPH BAILEY
STATE OF WASHINGTON
39820
REGISTERED PROFESSIONAL ENGINEER

Bailey, Ted
Jul 8 2015 3:08 PM

RAMP METER SIGNAL STANDARD ELECTRICAL DETAILS

STANDARD PLAN J-22.16-03

SHEET 1 OF 1 SHEET

APPROVED FOR PUBLICATION
Carpenter, Jeff
Jul 10 2015 7:19 AM
STATE DESIGN ENGINEER

Washington State Department of Transportation

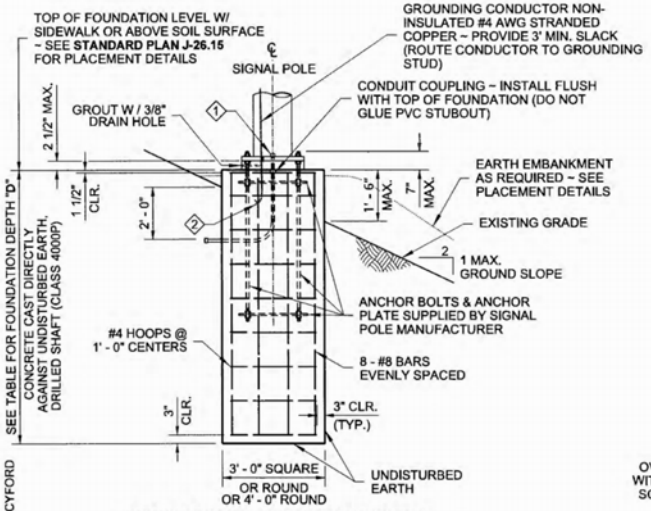

FOUNDATION REINFORCEMENT DETAIL

CONCRETE CAST DIRECTLY AGAINST UNDISTURBED EARTH, DRILLED SHAFT

ALTERNATE # 1

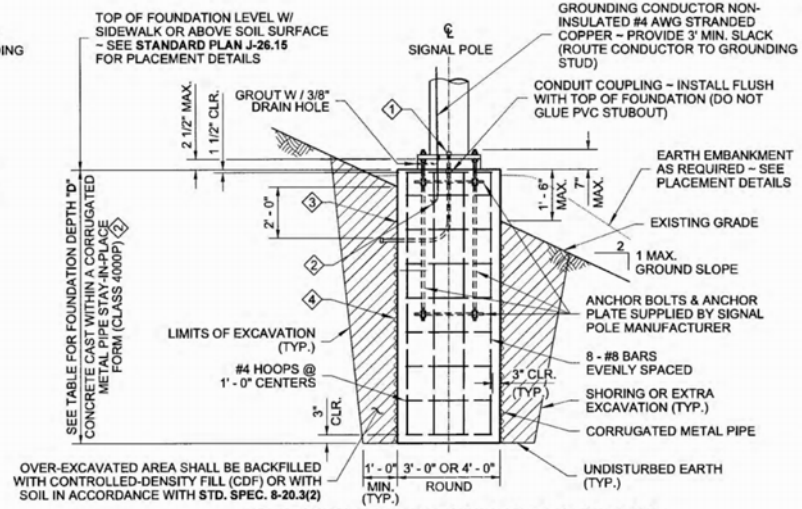

FOUNDATION REINFORCEMENT AND BACKFILL DETAIL

4 CONCRETE CAST WITHIN A CORRUGATED METAL PIPE STAY-IN-PLACE FORM

ALTERNATE # 2

1 CONDUIT SIZE AND QUANTITY AS SHOWN IN THE CONTRACT; CAP BOTH ENDS

2 CLAMP CONDUCTOR TO STEEL REINFORCING WITH LISTED CONNECTOR SUITABLE FOR USE EMBEDDED IN CONCRETE

3 PAPER OR CARDBOARD FORM SHALL NOT STAY-IN-PLACE

DRAWN BY: LISA CYFORD

NOTES

1. This structure has been designed according to the Fifth Edition 2009 AASHTO Standard Specifications for Structural Supports for Highway Signs, Luminaires and Traffic Signals. Basic wind velocity is 90 mph, Design Life/Recurrence Interval 50 years, and Fatigue Category III.
2. Foundations are designed for Type II, III, and SD Signal Standards with a maximum mast arm length of 65'.
3. Foundations are designed for Single Mast Arm Standards and Double Mast Arm Standards with 90° between arms. Special foundation design is required for Double Arm Standards where the angle between mast arms is other than 90°. For Double Mast Arm Standards with 90° between arms, use larger XYZ value for foundation depth selection.
4. Foundations not within the parameters of this standard require Special Design. Contact the WSDOT Bridge and Structures Office through the Engineer for Special Foundation Designs.
5. Foundations constructed within Ecology Embankments shall be increased in depth by the depth of the Ecology Embankment.
6. The top 2 feet of the foundation shall use a smooth form (such as paper or cardboard). After the concrete has cured, this entire form shall be removed.
7. For design parameters between the values listed in Table, depth requirements may be interpolated between the values provided.
8. Install Signal Foundation Identification Tag. See **Standard Plan J-26.15** for details.

FOUNDATION DEPTH "D" TABLE

ALTERNATE # 1 DRILLED SHAFT-TYPE CONSTRUCTION
FOR LATERAL BEARING PRESSURE = 2500 PSF & Ø = 34°, 1500 PSF & Ø = 28°, 1000 PSF & Ø = 26°

GROUND SLOPE = 3H : 1V OR FLATTER

ALLOWABLE LATERAL BEARING PRESSURE	FOUNDATION TYPE	XYZ (FT') 700	900	1350	1500	1900	2300	2600	3000
1000 PSF	3' - 0" ROUND	10' - 0"	10' - 0"	11' - 0"	11' - 0"	15' - 0"	18' - 0"	20' - 0"	20' - 0"
	3' - 0" SQUARE	8' - 0"	8' - 0"	9' - 0"	9' - 0"	10' - 0"	11' - 0"	12' - 0"	12' - 0"
	4' - 0" ROUND	8' - 0"	8' - 0"	9' - 0"	9' - 0"	10' - 0"	11' - 0"	12' - 0"	12' - 0"
1500 PSF	3' - 0" ROUND	8' - 0"	8' - 0"	9' - 0"	11' - 0"	13' - 0"	15' - 0"	18' - 0"	18' - 0"
	3' - 0" SQUARE	7' - 0"	7' - 0"	7' - 0"	8' - 0"	8' - 0"	9' - 0"	10' - 0"	10' - 0"
	4' - 0" ROUND	7' - 0"	7' - 0"	7' - 0"	8' - 0"	8' - 0"	9' - 0"	10' - 0"	10' - 0"
2500 PSF OR GREATER	3' - 0" ROUND	6' - 0"	6' - 0"	7' - 0"	8' - 0"	9' - 0"	11' - 0"	15' - 0"	15' - 0"
	3' - 0" SQUARE	6' - 0"	6' - 0"	6' - 0"	6' - 0"	7' - 0"	7' - 0"	8' - 0"	8' - 0"
	4' - 0" ROUND	6' - 0"	6' - 0"	6' - 0"	6' - 0"	7' - 0"	7' - 0"	8' - 0"	8' - 0"

GROUND SLOPE = GREATER THAN 3H : 1V TO 2H : 1V

ALLOWABLE LATERAL BEARING PRESSURE	FOUNDATION TYPE	XYZ (FT') 700	900	1350	1500	1900	2300	2600	3000
1000 PSF	3' - 0" ROUND	SPECIAL FOUNDATION TYPE							
	3' - 0" SQUARE	SPECIAL FOUNDATION TYPE							
	4' - 0" ROUND	SPECIAL FOUNDATION TYPE							
1500 PSF	3' - 0" ROUND	11' - 0"	11' - 0"	12' - 0"	14' - 0"	16' - 0"	18' - 0"	21' - 0"	21' - 0"
	3' - 0" SQUARE	10' - 0"	10' - 0"	10' - 0"	11' - 0"	11' - 0"	12' - 0"	13' - 0"	13' - 0"
	4' - 0" ROUND	10' - 0"	10' - 0"	10' - 0"	11' - 0"	11' - 0"	12' - 0"	13' - 0"	13' - 0"
2500 PSF OR GREATER	3' - 0" ROUND	9' - 0"	9' - 0"	10' - 0"	12' - 0"	12' - 0"	14' - 0"	18' - 0"	18' - 0"
	3' - 0" SQUARE	9' - 0"	9' - 0"	9' - 0"	9' - 0"	10' - 0"	10' - 0"	11' - 0"	11' - 0"
	4' - 0" ROUND	9' - 0"	9' - 0"	9' - 0"	9' - 0"	10' - 0"	10' - 0"	11' - 0"	11' - 0"

ALTERNATE # 2 CORRUGATED METAL PIPE TYPE CONSTRUCTION
FOR LATERAL BEARING PRESSURE = 2500 PSF & Ø = 23°, 1500 PSF & Ø = 18°, 1000 PSF & Ø = 17°

GROUND SLOPE = 3H : 1V OR FLATTER

ALLOWABLE LATERAL BEARING PRESSURE	FOUNDATION TYPE	XYZ (FT') 700	900	1350	1500	1900	2300	2600	3000
1000 PSF	3' - 0" ROUND	10' - 0"	10' - 0"	11' - 0"	15' - 0"	20' - 0"	25' - 0"	28' - 0"	28' - 0"
	4' - 0" ROUND	8' - 0"	8' - 0"	9' - 0"	12' - 0"	13' - 0"	14' - 0"	15' - 0"	15' - 0"
1500 PSF	3' - 0" ROUND	8' - 0"	8' - 0"	11' - 0"	15' - 0"	18 - 0"	21' - 0"	25' - 0"	25' - 0"
	4' - 0" ROUND	7' - 0"	7' - 0"	7' - 0"	8' - 0"	10' - 0"	13' - 0"	15' - 0"	15' - 0"
2500 PSF OR GREATER	3' - 0" ROUND	6' - 0"	6' - 0"	7' - 0"	11' - 0"	13' - 0"	18' - 0"	20' - 0"	20' - 0"
	4' - 0" ROUND	6' - 0"	6' - 0"	6' - 0"	6' - 0"	7' - 0"	9' - 0"	9' - 0"	9' - 0"

GROUND SLOPE = GREATER THAN 3H : 1V TO 2H : 1V

ALLOWABLE LATERAL BEARING PRESSURE	FOUNDATION TYPE	XYZ (FT') 700	900	1350	1500	1900	2300	2600	3000
1000 PSF	3' - 0" ROUND	SPECIAL FOUNDATION TYPE							
	4' - 0" ROUND	SPECIAL FOUNDATION TYPE							
1500 PSF	3' - 0" ROUND	11' - 0"	11' - 0"	14' - 0"	18' - 0"	21' - 0"	24' - 0"	28' - 0"	23' - 0"
	4' - 0" ROUND	10' - 0"	10' - 0"	10' - 0"	11' - 0"	13' - 0"	16' - 0"	18' - 0"	18' - 0"
2500 PSF OR GREATER	3' - 0" ROUND	9' - 0"	9' - 0"	10' - 0"	14' - 0"	16' - 0"	21' - 0"	23' - 0"	23' - 0"
	4' - 0" ROUND	9' - 0"	9' - 0"	9' - 0"	9' - 0"	10' - 0"	12' - 0"	12' - 0"	12' - 0"

ALTERNATE #2 - CONSTRUCTION METHOD
METAL (SUBSURFACE) FORM REQUIRED

When the existing soil will not retain a vertical face, over-excavate the foundation area and install a 36" or 48" diameter corrugated metal (pipe) form. The top of the corrugated metal form shall terminate 1 foot below final grade. Continue forming to full height using paper or cardboard form to achieve a smooth finish on final exposed cement concrete. Support the form as necessary to remain plumb.

Place the concrete foundation.

After concrete has cured, remove the entire paper or cardboard form portion.

Backfill with controlled-density fill or compacted borrow in accordance with **Standard Specification 8-20.3(2).**

2/6/12

SIGNAL STANDARD FOUNDATION PLAN

STANDARD PLAN J-26.10-02

SHEET 1 OF 1 SHEET

APPROVED FOR PUBLICATION

STATE DESIGN ENGINEER — DATE 3/13/12

Washington State Department of Transportation

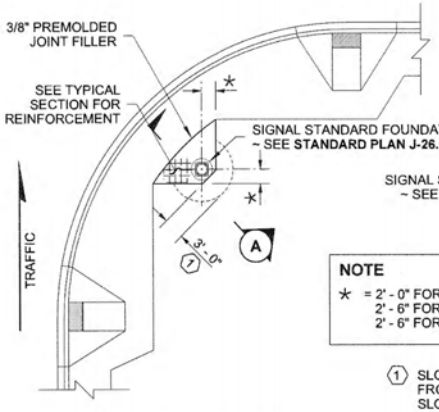

(SHOWN REDUCED)

PLAN

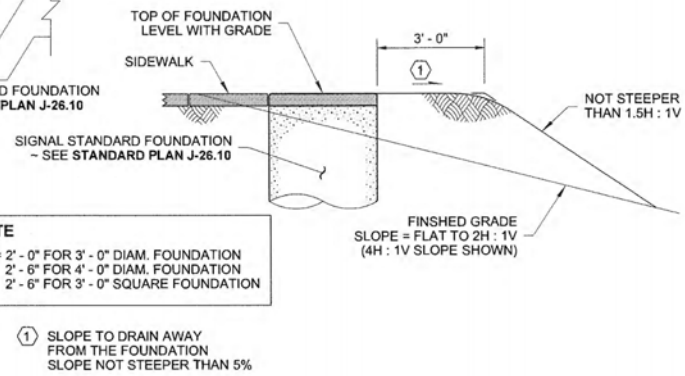

NOTE

* = 2' - 0" FOR 3' - 0" DIAM. FOUNDATION
2' - 6" FOR 4' - 0" DIAM. FOUNDATION
2' - 6" FOR 3' - 0" SQUARE FOUNDATION

(1) SLOPE TO DRAIN AWAY FROM THE FOUNDATION SLOPE NOT STEEPER THAN 5%

SECTION (A)

FOUNDATION IN OR NEAR SIDEWALK

CASE A

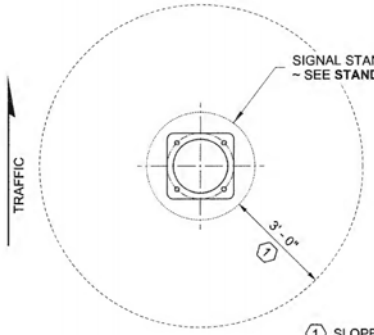

PLAN

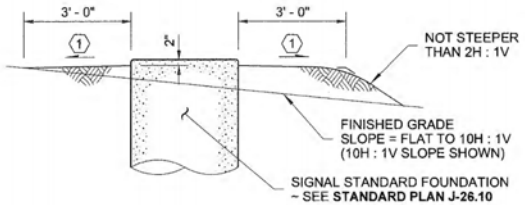

(1) SLOPE TO DRAIN AWAY FROM THE FOUNDATION SLOPE NOT STEEPER THAN 5%

ELEVATION

EXISTING GRADE OR FILL SLOPE = FLAT TO 10H : 1V

CASE B

DRAWN BY: LISA CYFORD

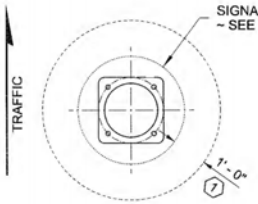

PLAN

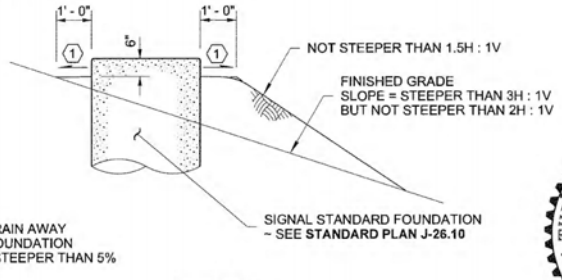

(1) SLOPE TO DRAIN AWAY FROM THE FOUNDATION SLOPE NOT STEEPER THAN 5%

ELEVATION

EXISTING GRADE OR FILL SLOPE = > 3H : 1V TO 2H : 1V

CASE D

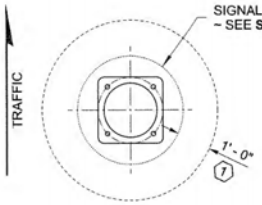

(1) SLOPE TO DRAIN AWAY FROM THE FOUNDATION SLOPE NOT STEEPER THAN 5%

PLAN

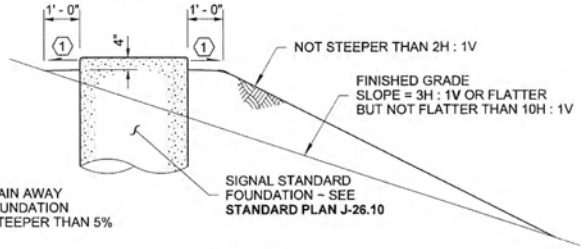

ELEVATION

EXISTING GRADE OR FILL SLOPE = 10H : 1V TO ≤ 3H : 1V

CASE C

5/15/2012

SIGNAL STANDARD FOUNDATION PLACEMENTS

STANDARD PLAN J-26.15-01

SHEET 1 OF 3 SHEETS

APPROVED FOR PUBLICATION

STATE DESIGN ENGINEER — DATE 5/17/12

Washington State Department of Transportation

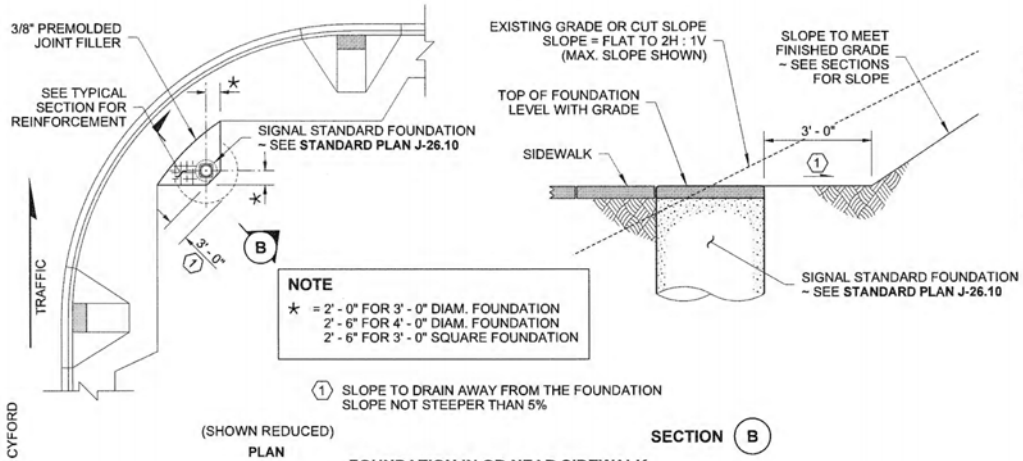

NOTE

★ = 2' - 0" FOR 3' - 0" DIAM. FOUNDATION
2' - 6" FOR 4' - 0" DIAM. FOUNDATION
2' - 6" FOR 3' - 0" SQUARE FOUNDATION

(1) SLOPE TO DRAIN AWAY FROM THE FOUNDATION SLOPE NOT STEEPER THAN 5%

(SHOWN REDUCED)
PLAN

SECTION (B)

FOUNDATION IN OR NEAR SIDEWALK
CASE E

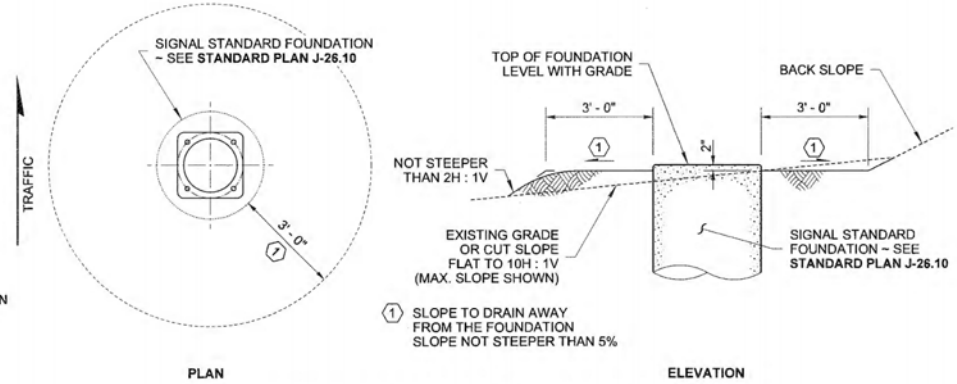

(1) SLOPE TO DRAIN AWAY FROM THE FOUNDATION SLOPE NOT STEEPER THAN 5%

PLAN

ELEVATION

EXISTING GRADE OR CUT SLOPE FLAT TO 10H : 1V
CASE F

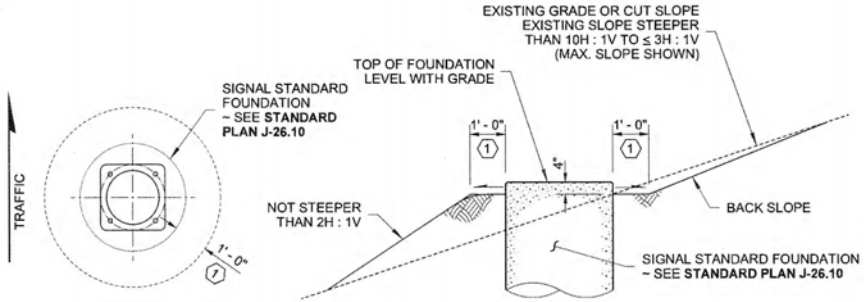

PLAN

(1) SLOPE TO DRAIN AWAY FROM THE FOUNDATION SLOPE NOT STEEPER THAN 5%

ELEVATION

EXISTING GRADE OR CUT SLOPE 10H : 1V TO ≤ 3H : 1V
CASE G

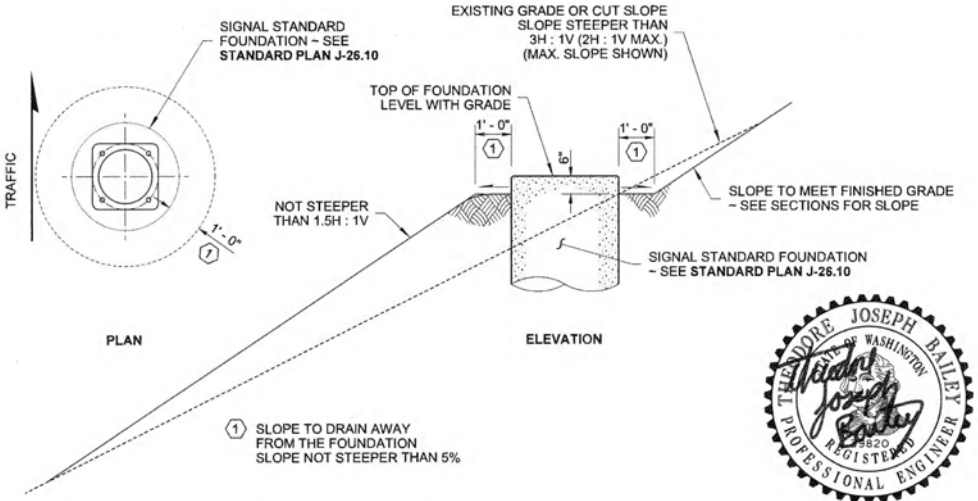

PLAN

ELEVATION

(1) SLOPE TO DRAIN AWAY FROM THE FOUNDATION SLOPE NOT STEEPER THAN 5%

EXISTING GRADE OR CUT SLOPE STEEPER THAN 3H : 1V (2H : 1V MAX.)
CASE H

THEODORE JOSEPH BAILEY
STATE OF WASHINGTON
29820
REGISTERED
PROFESSIONAL ENGINEER

5/15/2012

SIGNAL STANDARD FOUNDATION PLACEMENTS

STANDARD PLAN J-26.15-01

SHEET 2 OF 3 SHEETS

APPROVED FOR PUBLICATION

STATE DESIGN ENGINEER — DATE 5/17/12

Washington State Department of Transportation

DRAWN BY: LISA CYFORD

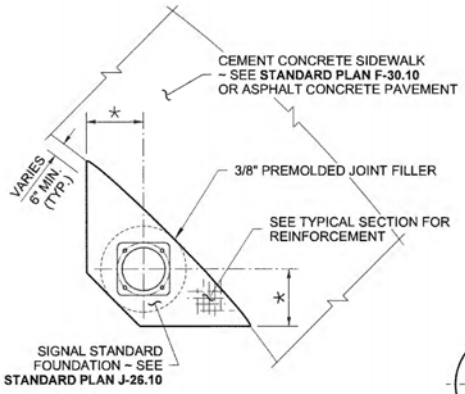

DUAL PEDESTRIAN PUSH BUTTON

NOTE

* = 2' - 0" FOR 3' - 0" DIAM. FOUNDATION
2' - 6" FOR 4' - 0" DIAM. FOUNDATION
2' - 6" FOR 3' - 0" SQUARE FOUNDATION

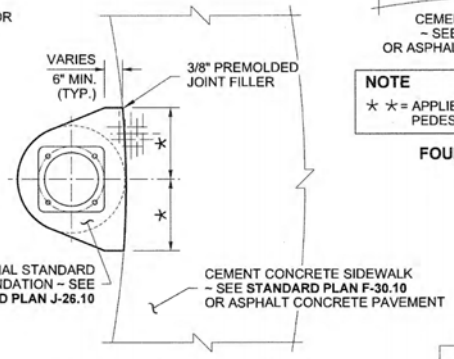

SINGLE PEDESTRIAN PUSH BUTTON

FOUNDATION OUTSIDE THE SIDEWALK SECTION

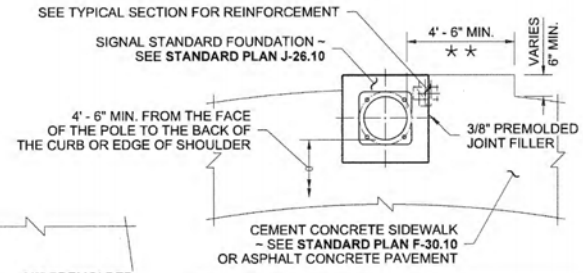

NOTE

* * = APPLIES TO THE SIDE OF THE FOUNDATION WHEN PEDESTRIAN PUSH BUTTON IS TO BE INSTALLED.

FOUNDATION PARTIALLY WITHIN SIDEWALK SECTION

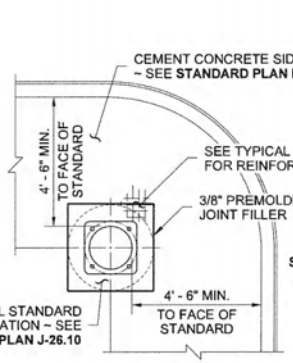

NOTE

REFER TO CONTRACT DOCUMENTS FOR PROJECT SPECIFIC INTERSECTION LAYOUTS & TRAFFIC ISLAND MATERIAL TYPE

FOUNDATION PARTIALLY WITHIN SIDEWALK SECTION

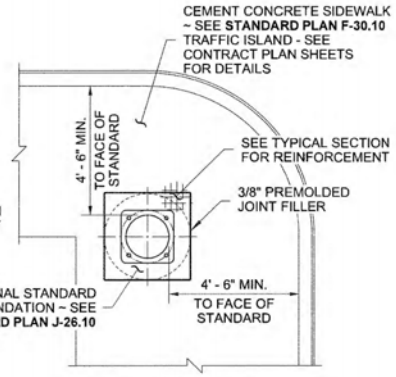

FOUNDATION WITHIN SIDEWALK OR TRAFFIC ISLAND SECTION

DRAWN BY: LISA CYFORD

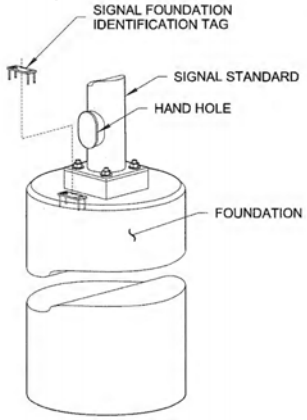

OBLIQUE VIEW

REINFORCING AND ANCHOR BOLTS NOT SHOWN FOR CLARITY (GROUT PAD OPTION SHOWN)

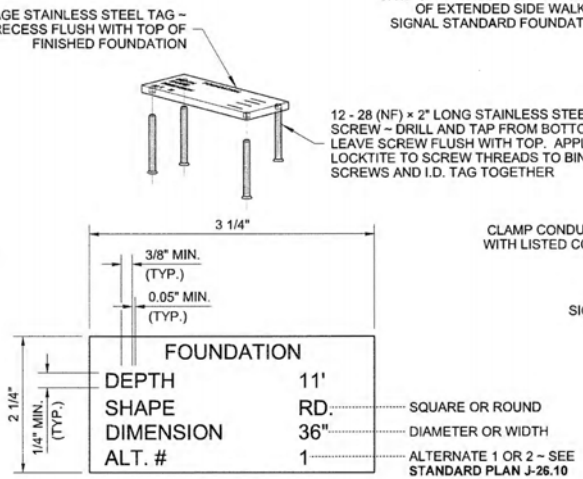

SIGNAL FOUNDATION IDENTIFICATION TAG DETAIL

TEXT SHALL BE ENGRAVED 0.014" DEEP

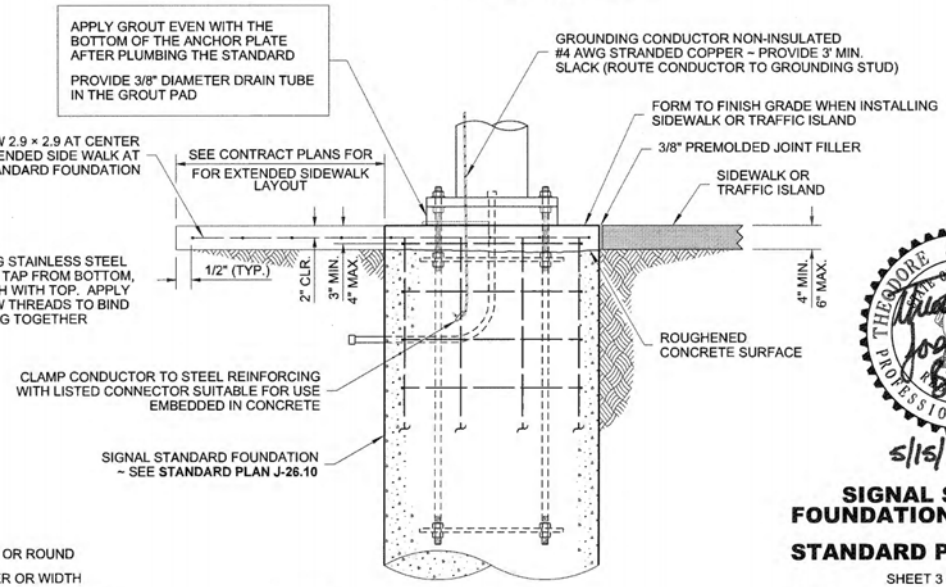

NOTE

FOUNDATION REINFORCING ONLY PARTIALLY SHOWN FOR CLARITY. ~ SEE STANDARD PLAN J-26.10 FOR DETAILS NOT SHOWN.

TYPICAL SECTION

5/15/2012

SIGNAL STANDARD FOUNDATION PLACEMENTS

STANDARD PLAN J-26.15-01

SHEET 3 OF 3 SHEETS

APPROVED FOR PUBLICATION

STATE DESIGN ENGINEER — DATE 5/17/12

Washington State Department of Transportation

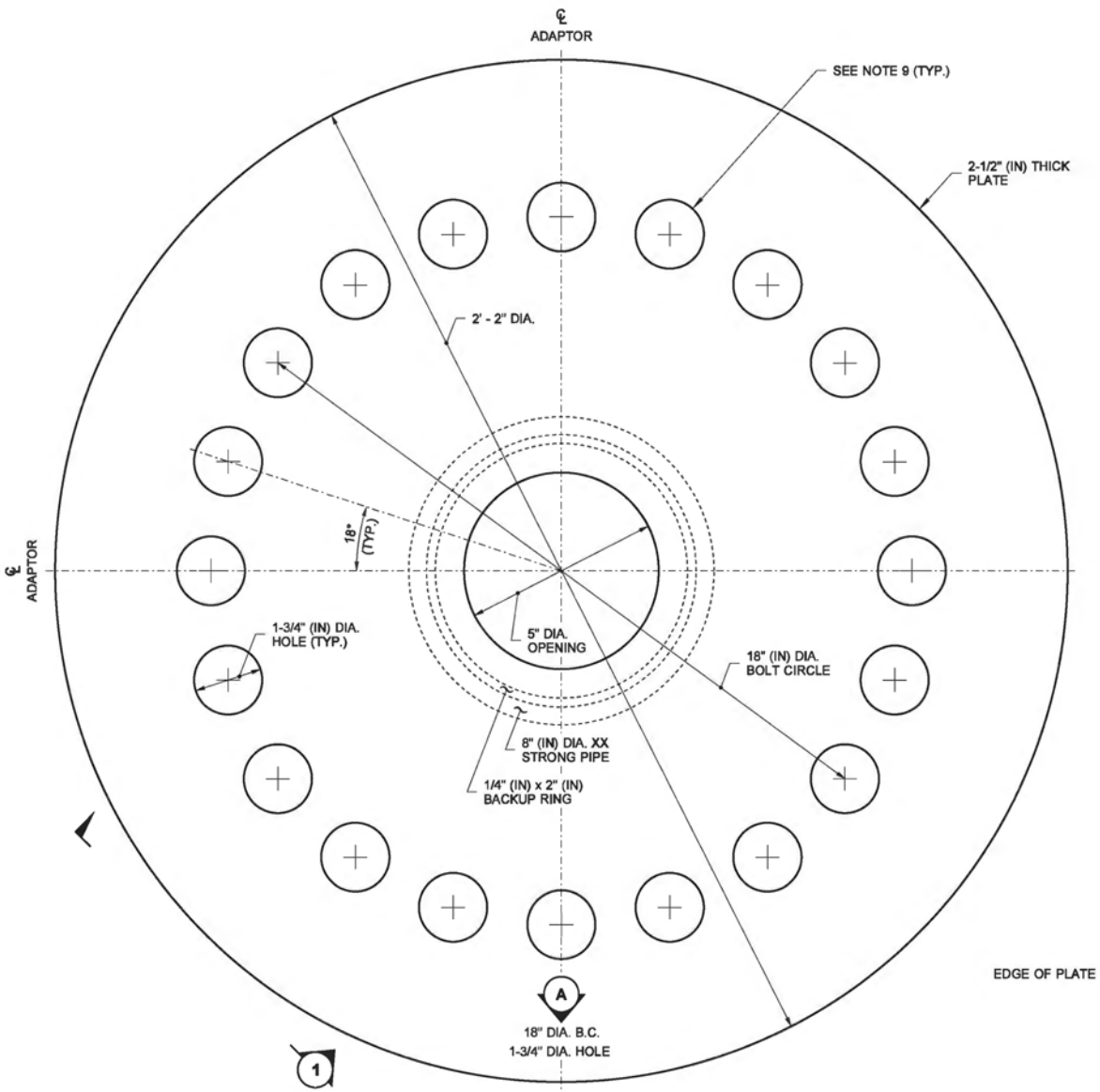

TOP VIEW
ADAPTOR 1 TOP PLATE

DRAWN BY: COLBY FLETCHER

NOTES

1. All material and workmanship shall be in accordance with the requirements of the Washington State Department of Transportation Standard Specifications for Road, Bridge, and Municipal Construction.
2. The analysis and design for Adaptors 1 and 2 have been done in accordance with AASHTO Standard Specifications for Structural Supports for Highway Signs, Luminaires and Traffic Signals - Fifth Edition - Dated 2009, and Interims, using basic wind speed of 90 MPH and 50 years of design life.
3. Adaptors' parameters are based on field data and existing signal standard anchor bolts and bolt circles. Adaptor 1 shall be used for 15' (ft) thru 45' (ft) mast arm signal standards and Adaptor 2 for 46' (ft) thru 65' (ft).
4. **Adaptors shall only be used for temporary installation of knocked down signal standards.**
5. Materials specifications:

All structural steel, except	**ASTM A572 GR. 50 OR**
as otherwise noted	**ASTM A588**
Pipes	**ASTM A53 GR. B OR A500 GR. B**
Connecting/clamping bolts	**AASHTO M 164 (ASTM A325)**
Nuts	**AASHTO M 291 (ASTM A263) GRADE DH**
Washers	**AASHTO M 293 (ASTM F436)**

6. All bolts, rods, and related hardware shall be galvanized after fabrication per ASTM F2329.
7. Steel surfaces shall be galvanized after fabrication in accordance with AASHTO M 111.
8. Install and secure adaptor to existing support anchor bolts. Then install signal standard on adaptor top plate. Rake to be plumb after all load has been placed.
9. All holes in top and bottom plates of Adaptor 1 and Adaptor 2 are thru holes. See engraved or stamped text for bolt hole diameter.

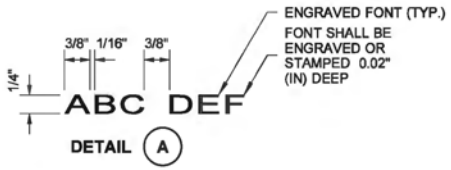

DETAIL (A)

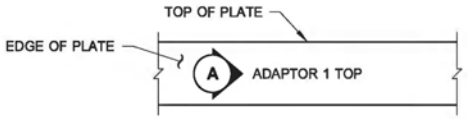

SECTION (1)

ADAPTOR 1 TOP SHOWN
(ADAPTOR 1 BOTTOM, ADAPTOR 2 TOP, AND ADAPTOR 2 BOTTOM SIMILAR)

ALL FONTS MARKED (A) SHALL BE ENGRAVED OR STAMPED

Zeldenrust, Richard
Jun 10 2014 10:32 AM

TEMPORARY SIGNAL STANDARD ADAPTOR

STANDARD PLAN J-26.20-00

SHEET 1 OF 5 SHEETS

APPROVED FOR PUBLICATION
Bakotich, Pasco
Jun 11 2014 1:31 PM
STATE DESIGN ENGINEER
Washington State Department of Transportation

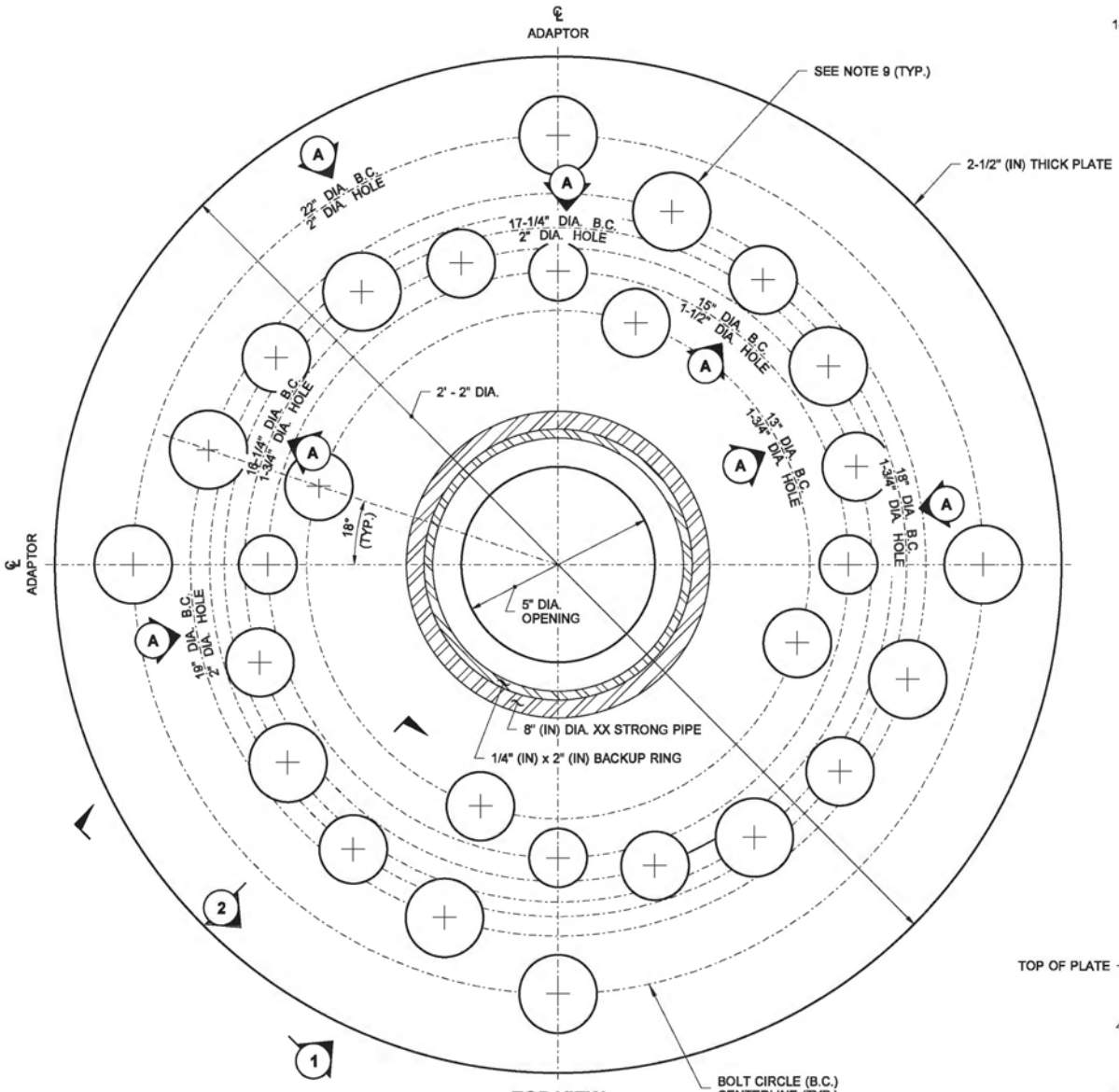

TOP VIEW
ADAPTOR 1 BOTTOM PLATE

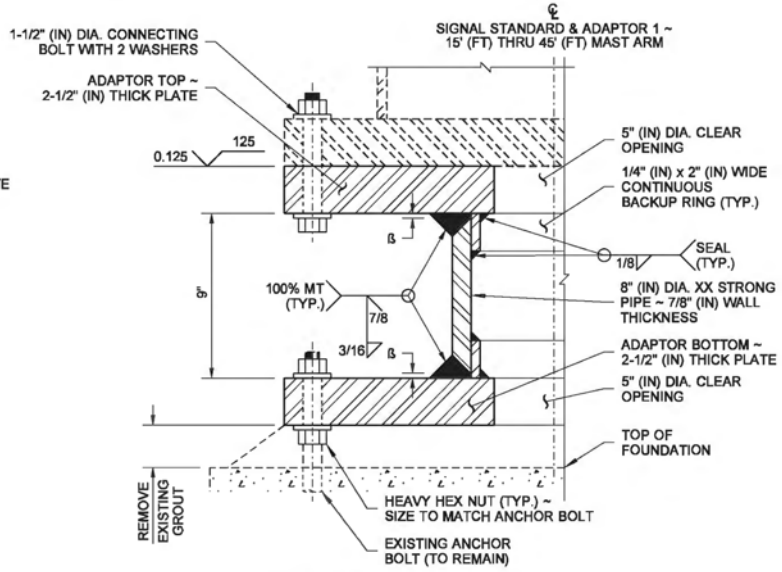

TYPICAL SECTION
ß - 3/16" (IN) MAX. GAP BEFORE WELDING

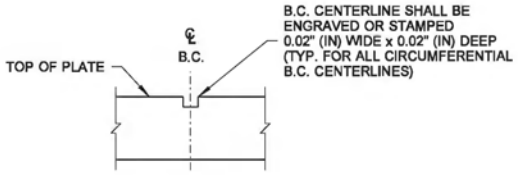

SECTION 2

ONE BOLT CIRCLE CENTERLINE SHOWN
(ALL BOLT CIRCLE CENTERLINES SIMILAR)

Zeldenrust, Richard
Jun 10 2014 10:33 AM

TEMPORARY SIGNAL STANDARD ADAPTOR

STANDARD PLAN J-26.20-00

SHEET 2 OF 5 SHEETS

APPROVED FOR PUBLICATION
Bakotich, Pasco
Jun 11 2014 1:32 PM
STATE DESIGN ENGINEER

Washington State Department of Transportation

DRAWN BY: COLBY FLETCHER

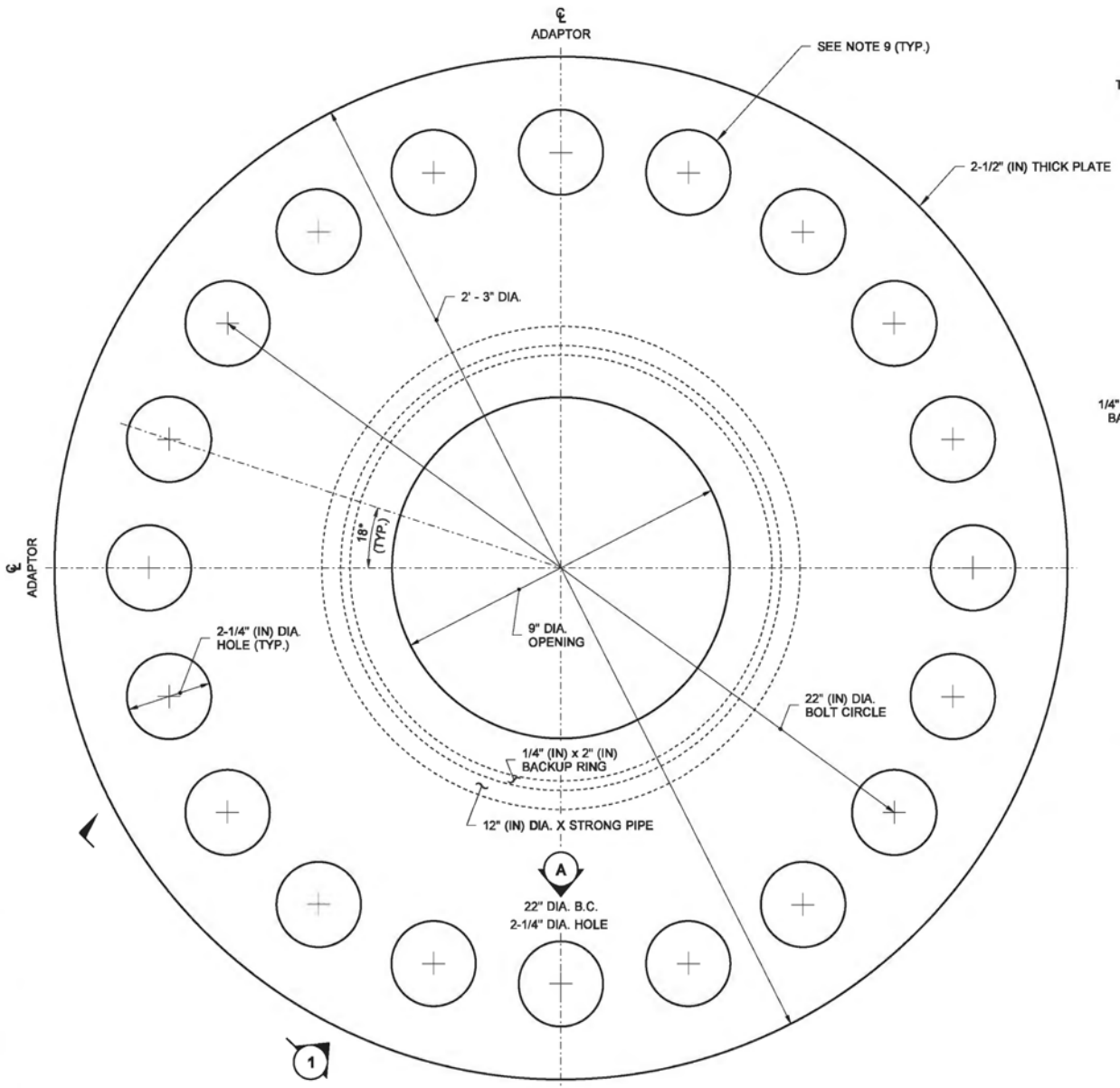

TOP VIEW
ADAPTOR 2 TOP PLATE

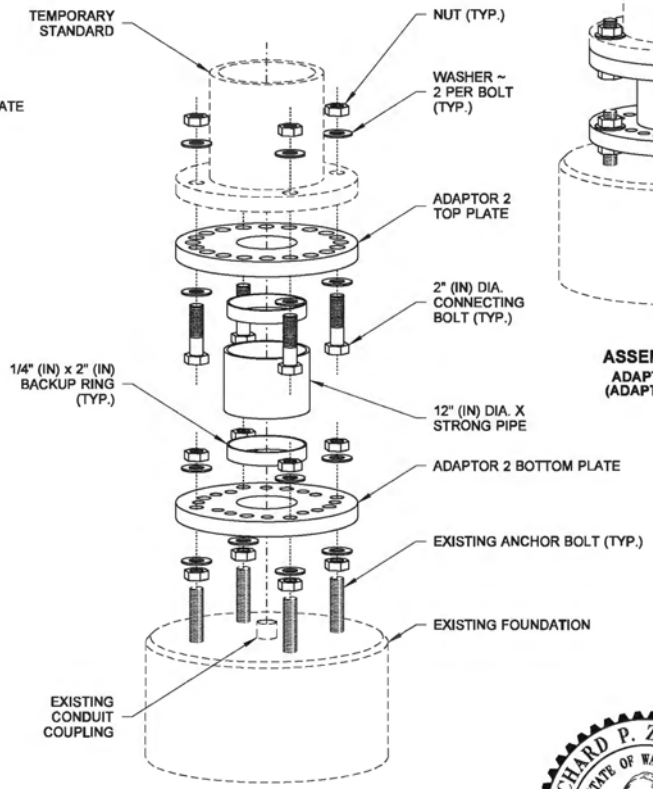

EXPLODED VIEW
ADAPTOR 2 SHOWN
(ADAPTOR 1 SIMILAR)

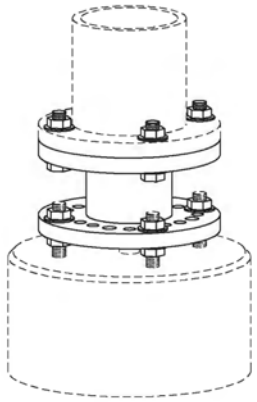

ASSEMBLED VIEW
ADAPTOR 2 SHOWN
(ADAPTOR 1 SIMILAR)

Zeldenrust, Richard
Jun 10 2014 10:33 AM

TEMPORARY SIGNAL STANDARD ADAPTOR

STANDARD PLAN J-26.20-00

SHEET 3 OF 5 SHEETS

APPROVED FOR PUBLICATION

Bakotich, Pasco
Jun 11 2014 1:32 PM

STATE DESIGN ENGINEER

Washington State Department of Transportation

DRAWN BY: COLBY FLETCHER

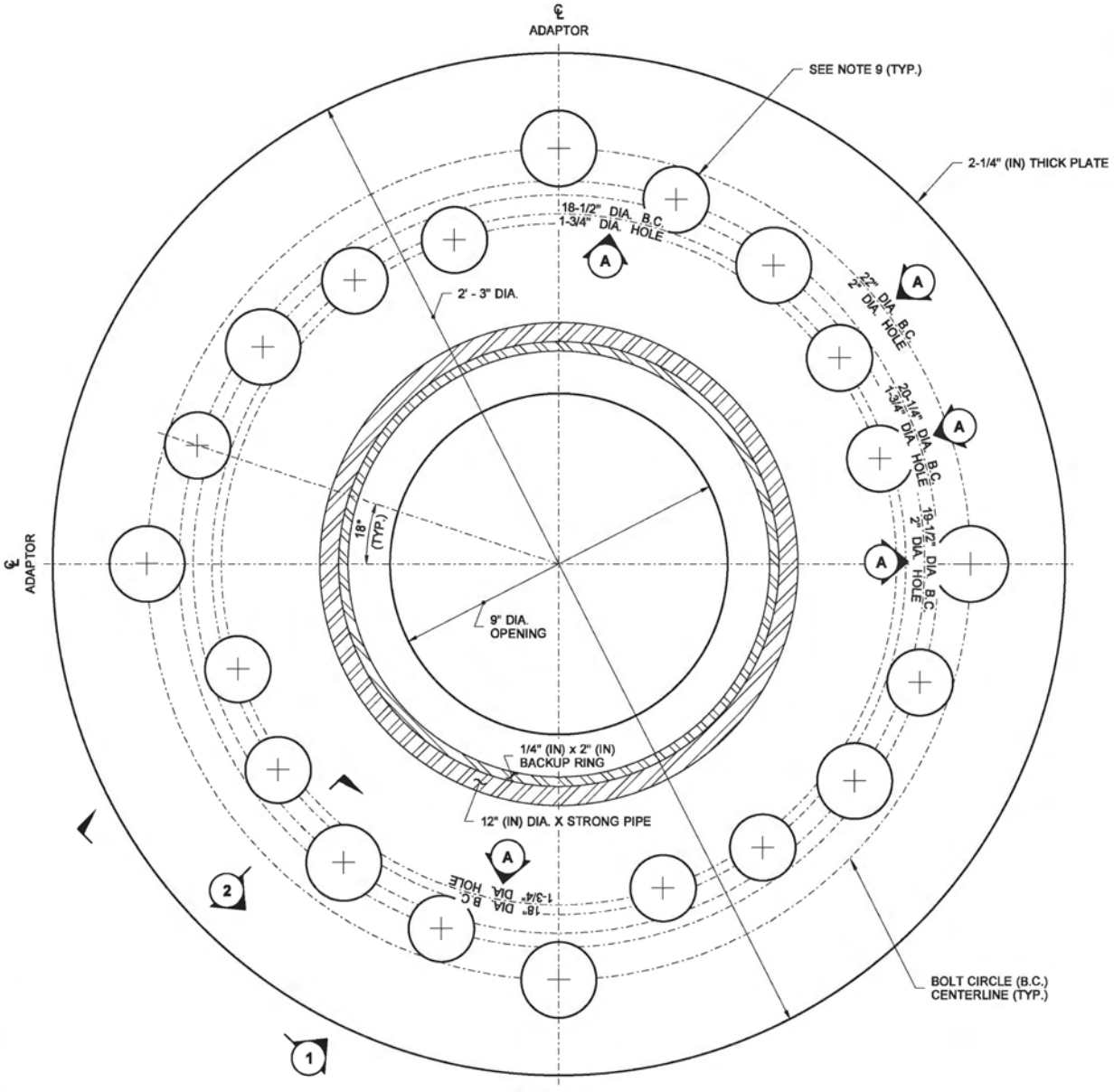

TOP VIEW
ADAPTOR 2 BOTTOM PLATE

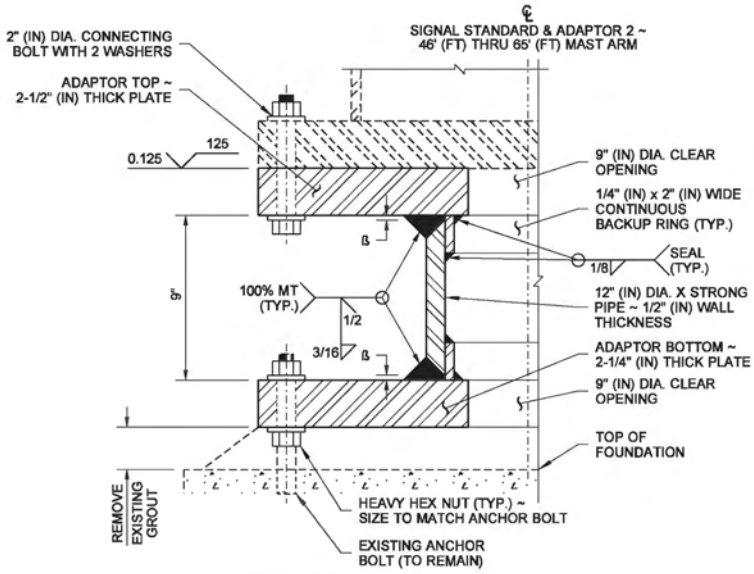

TYPICAL SECTION
ß - 3/16" (IN) MAX. GAP BEFORE WELDING

DRAWN BY: COLBY FLETCHER

Zeldenrust, Richard
Jun 10 2014 10:34 AM

TEMPORARY SIGNAL STANDARD ADAPTOR

STANDARD PLAN J-26.20-00

SHEET 4 OF 5 SHEETS

APPROVED FOR PUBLICATION
Bakotich, Pasco
Jun 11 2014 1:32 PM
STATE DESIGN ENGINEER
Washington State Department of Transportation

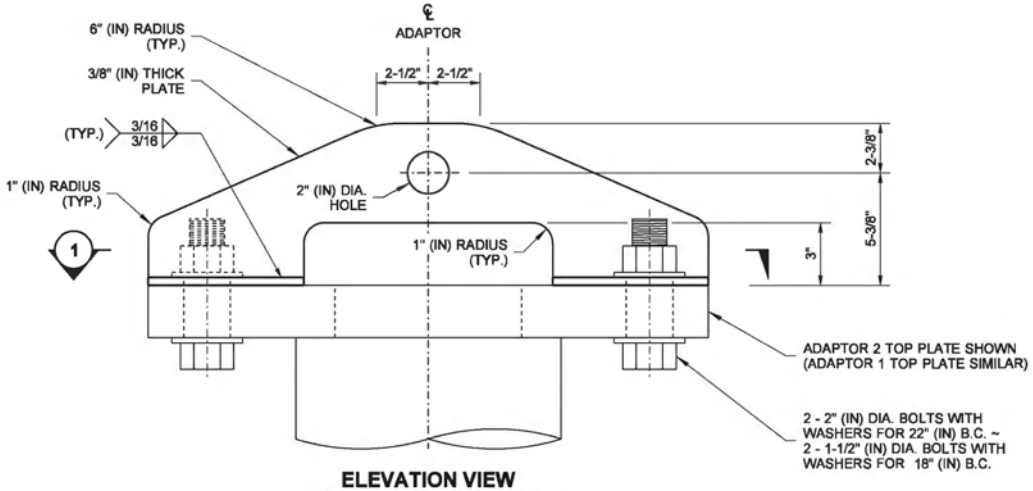

ELEVATION VIEW
ADAPTOR LIFTING TOOL
REMOVE ALL BURRS AND SHARP EDGES

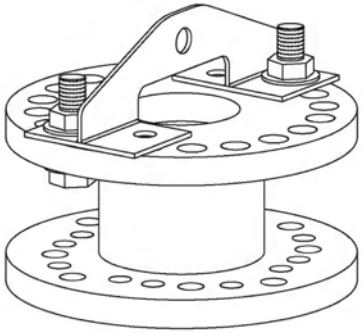

ASSEMBLED VIEW
ADAPTOR LIFTING TOOL WITH ADAPTOR 2 SHOWN (ADAPTOR 1 SIMILAR)

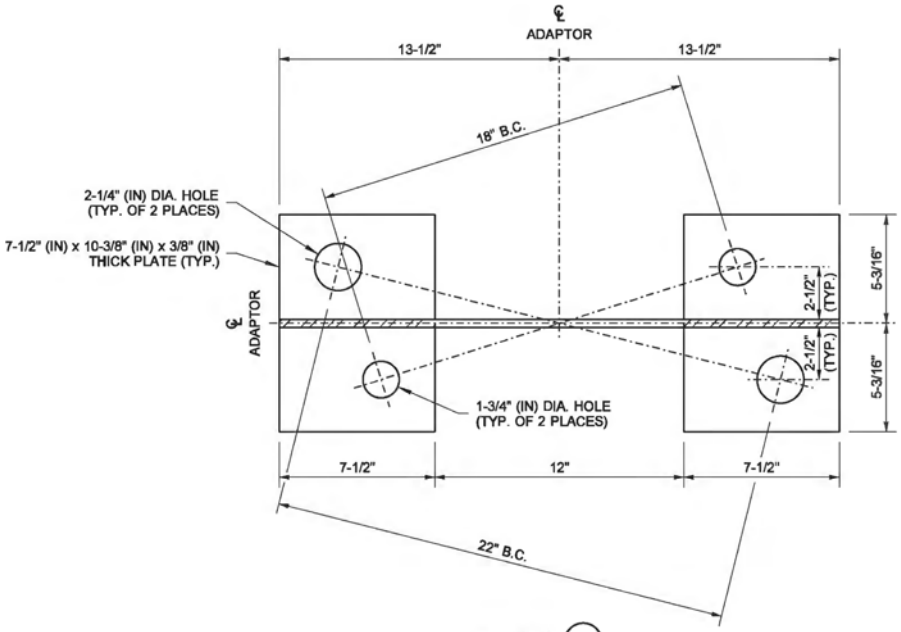

SECTION 1

DRAWN BY: COLBY FLETCHER

Zeldenrust, Richard
Jun 10 2014 10:34 AM

TEMPORARY SIGNAL STANDARD ADAPTOR

STANDARD PLAN J-26.20-00

SHEET 5 OF 5 SHEETS

APPROVED FOR PUBLICATION
Bakotich, Pasco
Jun 11 2014 1:32 PM

STATE DESIGN ENGINEER

Washington State Department of Transportation

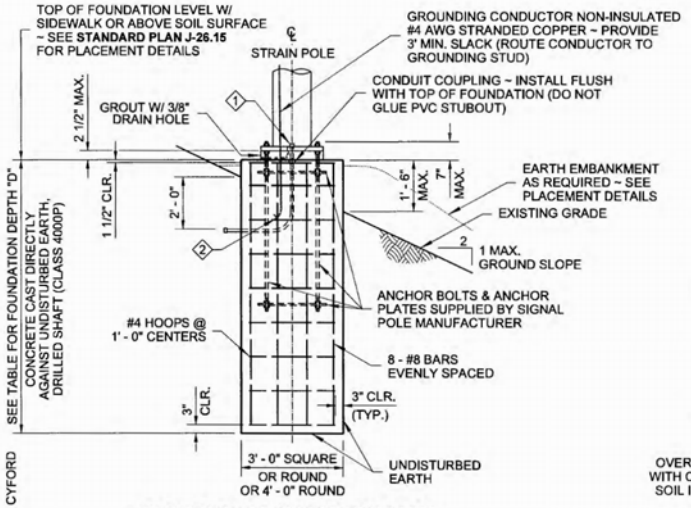

FOUNDATION REINFORCEMENT DETAIL

CONCRETE CAST DIRECTLY AGAINST UNDISTURBED EARTH, DRILLED SHAFT

ALTERNATE #1

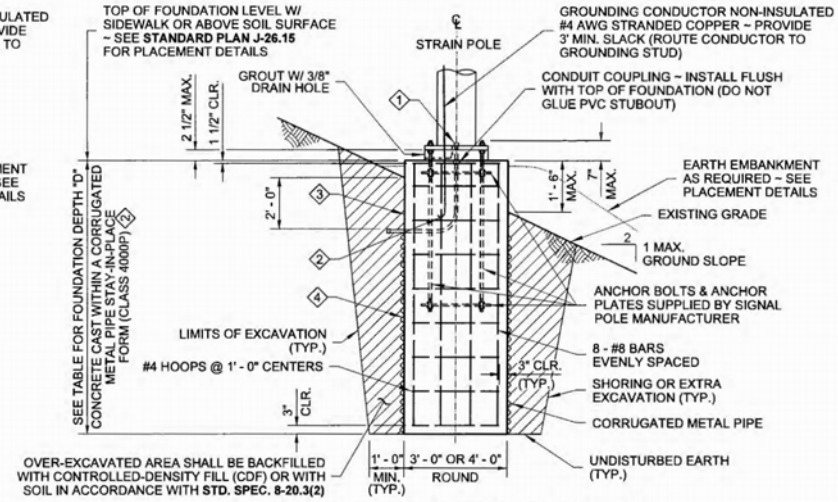

FOUNDATION REINFORCEMENT AND BACKFILL DETAIL

4 CONCRETE CAST WITHIN A CORRUGATED METAL PIPE STAY-IN-PLACE FORM

ALTERNATE #2

1 CONDUIT SIZE AND QUANTITY AS SHOWN IN THE CONTRACT; CAP BOTH ENDS

2 CLAMP CONDUCTOR TO STEEL REINFORCING WITH LISTED CONNECTOR SUITABLE FOR USE EMBEDDED IN CONCRETE

3 PAPER OR CARDBOARD FORM SHALL NOT STAY-IN-PLACE

DRAWN BY: LISA CYFORD

NOTES

1. This structure has been designed according to the Fifth Edition 2009 AASHTO Standard Specifications for Structural Supports for Highway Signs, Luminaires, and Traffic Signals: Basic wind velocity 90 mph, Design Life/Recurrence Interval 50 years, and Fatigue Category III.
2. Foundations are designed for Type IV and V Strain Pole Standards with a maximum mast arm length of 16' - 0".
3. Foundations not within the parameters of this standard require Special Design. Contact the WSDOT Bridge and Structures Office through the Engineer for Special Foundation Designs.
4. Foundations constructed within Ecology Embankments shall be increased in depth by the depth of the Ecology Embankment.
5. The top 2 feet of the foundation shall use a smooth form (such as paper or cardboard). After the concrete has cured, this entire form shall be removed.
6. See **Standard Plan J-27.15** for Strain Pole Standards Type IV and V details.
7. Install Signal Foundation Identification Tag. See **Standard Plan J-26.15** for details.

ALTERNATE # 1 DRILLED SHAFT-TYPE CONSTRUCTION - DEPTH "D"
FOR LATERAL BEARING PRESSURE = 2500 PSF & Ø = 34°, 1500 PSF & Ø = 28°, 1000 PSF & Ø = 26°

GROUND SLOPE = 3H : 1V OR FLATTER

ALLOWABLE LATERAL BEARING PRESSURE	FOUNDATION TYPE	POLE CLASS - RESULTANT HORIZONTAL TENSION (LBS)						
		1900	2700	3700	4800	5600	6300	7200
1000 PSF	3' - 0" ROUND	11' - 0"	13' - 0"	15' - 0"	16' - 0"	18' - 0"	19' - 0"	20' - 0"
	3' - 0" SQUARE	11' - 0"	13' - 0"	15' - 0"	16' - 0"	18' - 0"	19' - 0"	20' - 0"
	4' - 0" ROUND	10' - 0"	11' - 0"	13' - 0"	15' - 0"	15' - 0"	16' - 0"	18' - 0"
1500 PSF	3' - 0" ROUND	9' - 0"	11' - 0"	12' - 0"	14' - 0"	15' - 0"	15' - 0"	16' - 0"
	3' - 0" SQUARE	9' - 0"	11' - 0"	12' - 0"	14' - 0"	15' - 0"	15' - 0"	16' - 0"
	4' - 0" ROUND	8' - 0"	9' - 0"	10' - 0"	12' - 0"	13' - 0"	13' - 0"	14' - 0"
2500 PSF OR GREATER	3' - 0" ROUND	7' - 0"	8' - 0"	9' - 0"	10' - 0"	11' - 0"	12' - 0"	13' - 0"
	3' - 0" SQUARE	7' - 0"	8' - 0"	9' - 0"	10' - 0"	11' - 0"	12' - 0"	13' - 0"
	4' - 0" ROUND	6' - 0"	7' - 0"	8' - 0"	9' - 0"	10' - 0"	10' - 0"	11' - 0"

GROUND SLOPE = 3H : 1V TO 2H : 1V

ALLOWABLE LATERAL BEARING PRESSURE	FOUNDATION TYPE	POLE CLASS - RESULTANT HORIZONTAL TENSION (LBS)						
		1900	2700	3700	4800	5600	6300	7200
1000 PSF	3' - 0" ROUND	SPECIAL FOUNDATION TYPE						
	3' - 0" SQUARE	SPECIAL FOUNDATION TYPE						
	4' - 0" ROUND	SPECIAL FOUNDATION TYPE						
1500 PSF	3' - 0" ROUND	10' - 0"	12' - 0"	13' - 0"	15' - 0"	16' - 0"	16' - 0"	17' - 0"
	3' - 0" SQUARE	10' - 0"	12' - 0"	13' - 0"	15' - 0"	16' - 0"	16' - 0"	17' - 0"
	4' - 0" ROUND	9' - 0"	10' - 0"	11' - 0"	13' - 0"	14' - 0"	14' - 0"	15' - 0"
2500 PSF OR GREATER	3' - 0" ROUND	8' - 0"	9' - 0"	10' - 0"	11' - 0"	12' - 0"	13' - 0"	14' - 0"
	3' - 0" SQUARE	8' - 0"	9' - 0"	10' - 0"	11' - 0"	12' - 0"	13' - 0"	14' - 0"
	4' - 0" ROUND	7' - 0"	8' - 0"	9' - 0"	10' - 0"	11' - 0"	11' - 0"	12' - 0"

ALTERNATE # 2 CORRUGATED METAL PIPE TYPE CONSTRUCTION - DEPTH "D"
FOR LATERAL BEARING PRESSURE = 2500 PSF & Ø = 23°, 1500 PSF & Ø = 18°, 1000 PSF & Ø = 17°

GROUND SLOPE = 3H : 1V OR FLATTER

ALLOWABLE LATERAL BEARING PRESSURE	FOUNDATION TYPE	POLE CLASS - RESULTANT HORIZONTAL TENSION (LBS)						
		1900	2700	3700	4800	5600	6300	7200
1000 PSF	3' - 0" ROUND	11' - 0"	13' - 0"	15' - 0"	16' - 0"	18' - 0"	19' - 0"	20' - 0"
	4' - 0" ROUND	10' - 0"	11' - 0"	13' - 0"	15' - 0"	15' - 0"	16' - 0"	18' - 0"
1500 PSF	3' - 0" ROUND	9' - 0"	11' - 0"	12' - 0"	14' - 0"	15' - 0"	15' - 0"	16' - 0"
	4' - 0" ROUND	8' - 0"	9' - 0"	10' - 0"	12' - 0"	13' - 0"	13' - 0"	14' - 0"
2500 PSF OR GREATER	3' - 0" ROUND	7' - 0"	8' - 0"	9' - 0"	10' - 0"	11' - 0"	12' - 0"	13' - 0"
	4' - 0" ROUND	6' - 0"	7' - 0"	8' - 0"	9' - 0"	10' - 0"	10' - 0"	11' - 0"

GROUND SLOPE = 3H : 1V TO 2H : 1V

ALLOWABLE LATERAL BEARING PRESSURE	FOUNDATION TYPE	POLE CLASS - RESULTANT HORIZONTAL TENSION (LBS)						
		1900	2700	3700	4800	5600	6300	7200
1000 PSF	3' - 0" ROUND	SPECIAL FOUNDATION TYPE						
	4' - 0" ROUND	SPECIAL FOUNDATION TYPE						
1500 PSF	3' - 0" ROUND	10' - 0"	12' - 0"	13' - 0"	15' - 0"	16' - 0"	16' - 0"	17' - 0"
	4' - 0" ROUND	9' - 0"	10' - 0"	11' - 0"	13' - 0"	14' - 0"	14' - 0"	15' - 0"
2500 PSF OR GREATER	3' - 0" ROUND	8' - 0"	9' - 0"	10' - 0"	11' - 0"	12' - 0"	13' - 0"	14' - 0"
	4' - 0" ROUND	7' - 0"	8' - 0"	9' - 0"	10' - 0"	11' - 0"	11' - 0"	12' - 0"

ALTERNATE #2 - CONSTRUCTION METHOD
METAL (SUBSURFACE) FORM REQUIRED

When the existing soil will not retain a vertical face, over-excavate the foundation area and install a 36" or 48" diameter corrugated metal (pipe) form. The top of the corrugated metal form shall terminate 1 foot below final grade. Continue forming to full height using a paper or cardboard form to achieve a smooth finish on final exposed cement concrete. Support the form as necessary to remain plumb.

Place the concrete foundation.

After concrete has cured, remove the entire paper or cardboard form portion.

Backfill with controlled-density fill or compacted borrow in accordance with **Standard Specification 8-20.3(2).**

RICHARD P. ZELDENRUST
STATE OF WASHINGTON
25470
STRUCTURAL ENGINEER
PROFESSIONAL ENGINEER
2/15/12

TYPE IV AND V STRAIN POLE FOUNDATION

STANDARD PLAN J-27.10-00

SHEET 1 OF 1 SHEET

APPROVED FOR PUBLICATION
STATE DESIGN ENGINEER — DATE 2/15/12

Washington State Department of Transportation

DRAWN BY: LISA CYFORD

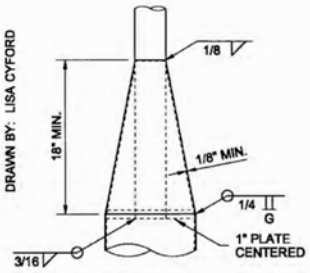

CONE SECTION DETAIL

STRAIN POLE DIMENSION CHART								
KEY	ITEM	POLE CLASS (Resultant Horizontal Tension)						
		1900 LB	2700 LB	3700 LB	4800 LB	5600 LB	6300 LB	7200 LB
	POLE GAGE OR THICKNESS *	3	3	1/4	5/16	5/16	5/16	5/16
A	BASE PLATE	15"	17"	19"	20"	20"	22"	22"
B	ANCHOR BOLT CIRCLE DIAM.	15"	17"	19"	20"	20"	22"	22"
C	POLE BASE DIAMETER *	11"	12 1/2"	14"	14"	15"	16"	17"
D	BASE PLATE THICKNESS *	1 1/2"	1 1/2"	1 1/2"	1 3/4"	1 3/4"	1 3/4"	1 3/4"
E	ANCHOR BOLT DIAMETER	1 1/4"	1 1/2"	1 1/2"	1 3/4"	1 3/4"	1 3/4"	1 3/4"

* MINIMUM REQUIRED DIMENSION - CONTRACTOR MAY REVISE WITH ENGINEER APPROVAL

NOTES

1. This structure has been designed according to the Fifth Edition 2009 AASHTO Standard Specifications for Structural Supports for Highway Signs, Luminaires, and Traffic Signals: Basic wind velocity 90 mph, Design Life/Recurrence Interval 50 years, and Fatigue Category III.
2. 2 1/2" diameter weatherhead may be substituted for the elbow and nipple assembly.
3. Pole shaft shall have 0.14" ft/taper.
4. See **Standard Plan J-15.15** for Span Wire Installation details.
5. Hand holes may be 6" × 4", oval or rectangle. Provide a "J" or "C" hook at 90° or 180° off upper hand hole.
6. See **Standard Plan J-27.10** for Type IV and V Strain Pole Foundation.

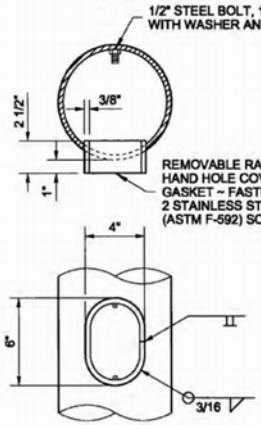

HAND HOLE DETAIL
(SEE NOTE 5)

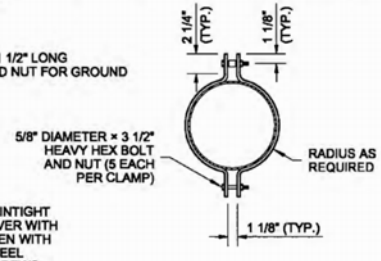

STRAIN CLAMP DETAIL

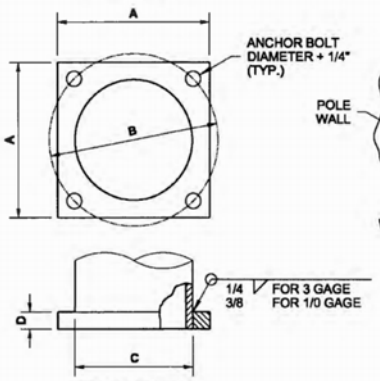

BASE PLATE DETAIL

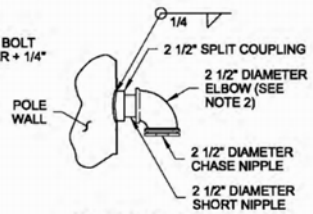

WIREWAY DETAIL

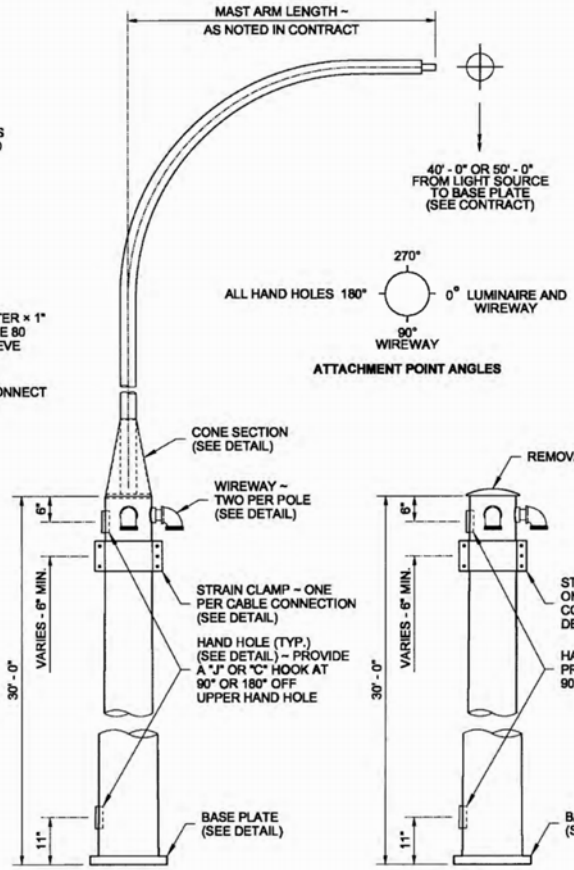

TYPE V STANDARD

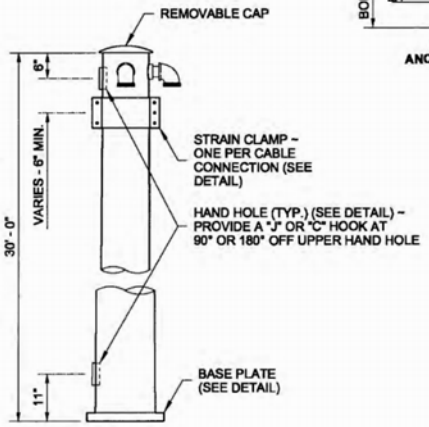

TYPE IV STANDARD

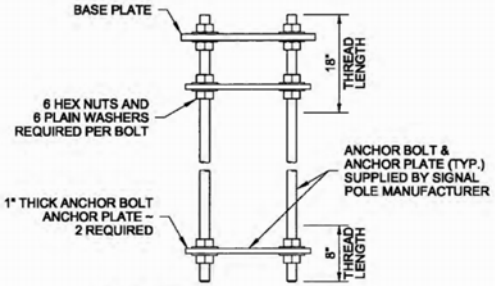

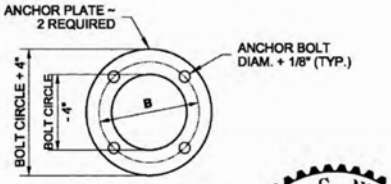

ANCHOR BOLT AND ANCHOR PLATE ASSEMBLY DETAIL

JOHN C. NISBET
STATE OF WASHINGTON
29115
REGISTERED
PROFESSIONAL ENGINEER
4/15/12

TYPE IV AND V STRAIN POLE STANDARD

STANDARD PLAN J-27.15-00

SHEET 1 OF 1 SHEET

APPROVED FOR PUBLICATION

STATE DESIGN ENGINEER — DATE 3/15/12

Washington State Department of Transportation

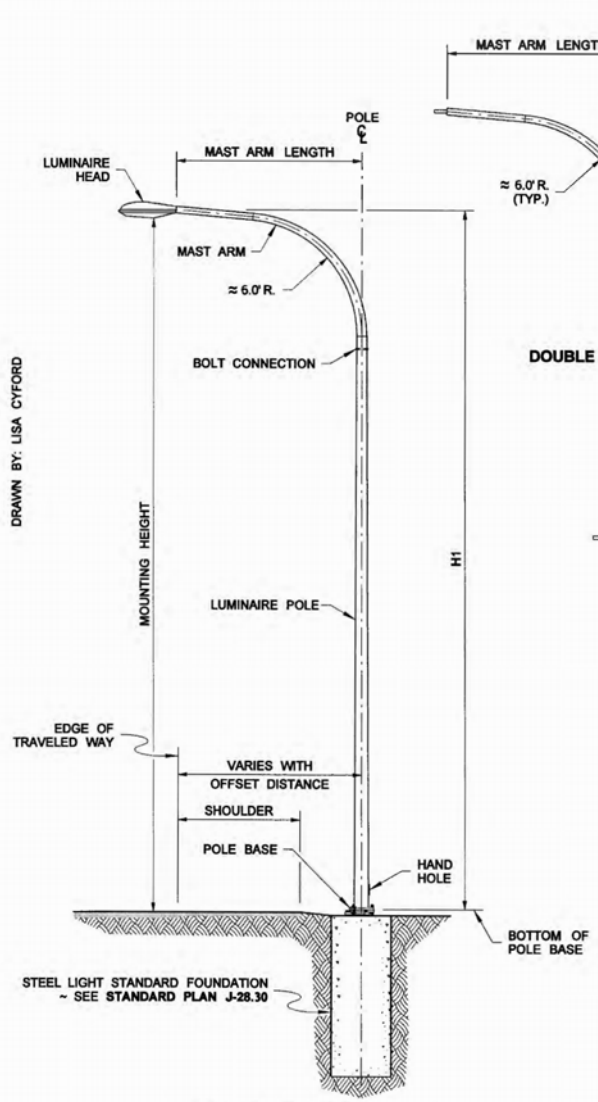

LIGHT STANDARD
WITH TYPE 1 (DAVIT) MAST ARM
(SLIP BASE SHOWN)

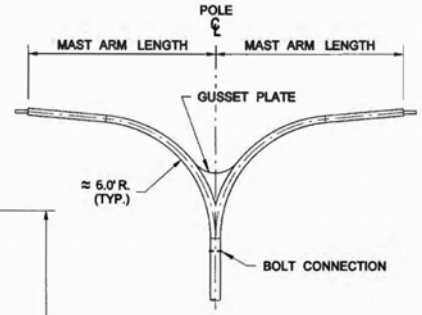

DOUBLE TYPE 1 MAST ARM

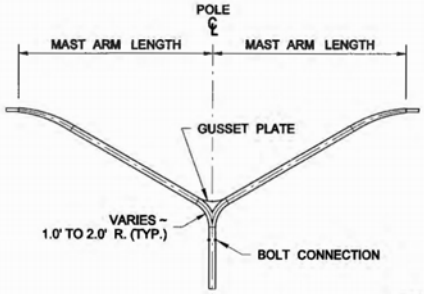

DOUBLE TYPE 2 MAST ARM

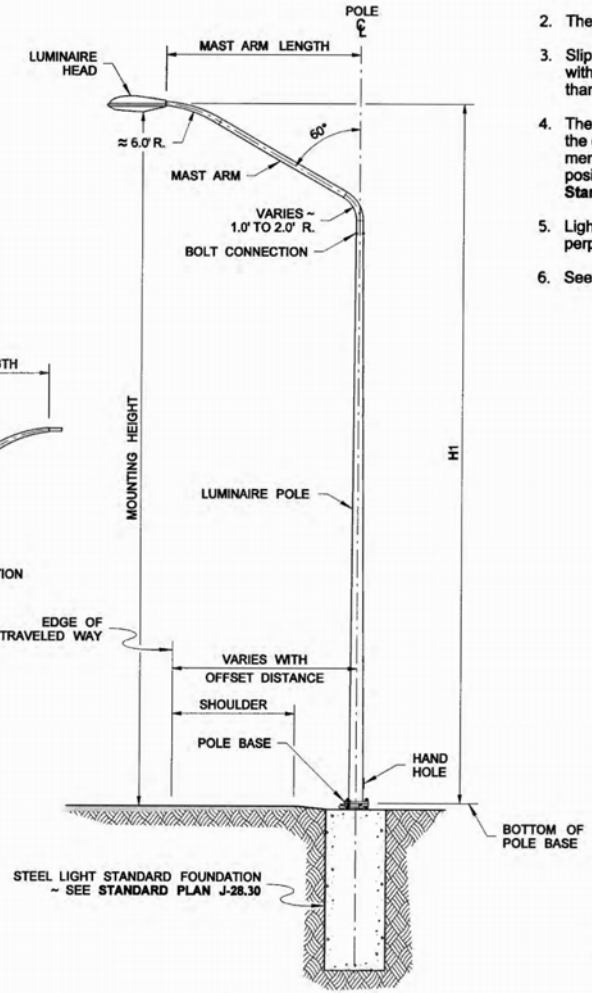

LIGHT STANDARD
WITH TYPE 2 (ELBOW) MAST ARM
(SLIP BASE SHOWN)

DRAWN BY: LISA CYFORD

NOTES

1. This plan depicts the Steel Light Standard types and terms commonly referred to in the Contract. All Steel Light Standards are fabricated in accordance with the Standard Specifications and the Contract Provisions.
2. The Luminaire Pole height shall not exceed 50' (**H1**).
3. Slip Bases shall not be installed on 50' (**H1**) poles with Double Mast Arms, nor on poles weighing more than 1000 lbs.
4. The optimal location of the Luminaire head is over the edge of the traveled way. Based on the placement of the Steel Light Standard foundation, the position of the Luminaire head may vary. See **Standard Plan J-28.22.**
5. Light Standard mast arm orientation is typically perpendicular to roadway centerline.
6. See **Standard Plan J-28.50** for Hand Hole details.

STEEL LIGHT STANDARD

STANDARD PLAN J-28.10-01

SHEET 1 OF 2 SHEETS

APPROVED FOR PUBLICATION

STATE DESIGN ENGINEER — DATE 5/2/11

Washington State Department of Transportation

DRAWN BY: LISA CYFORD

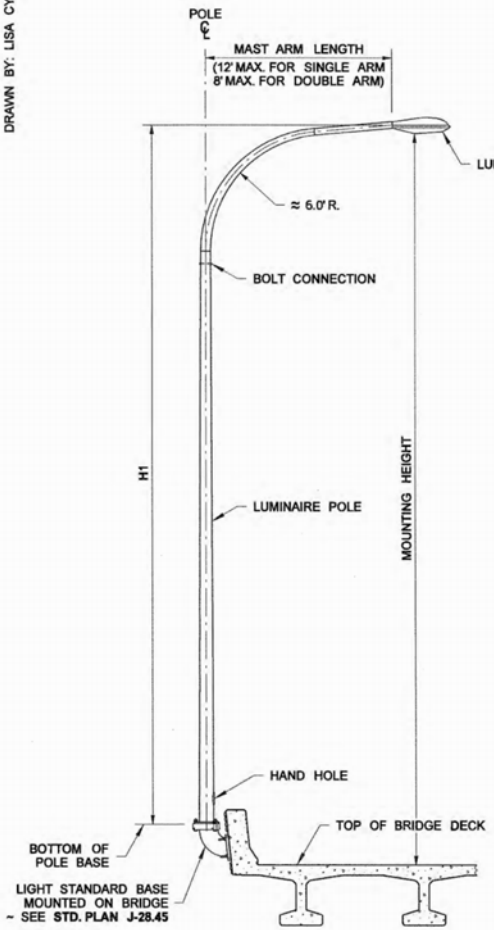

BRIDGE-MOUNTED LUMINAIRE
(TYPE 1 MAST ARM SHOWN)

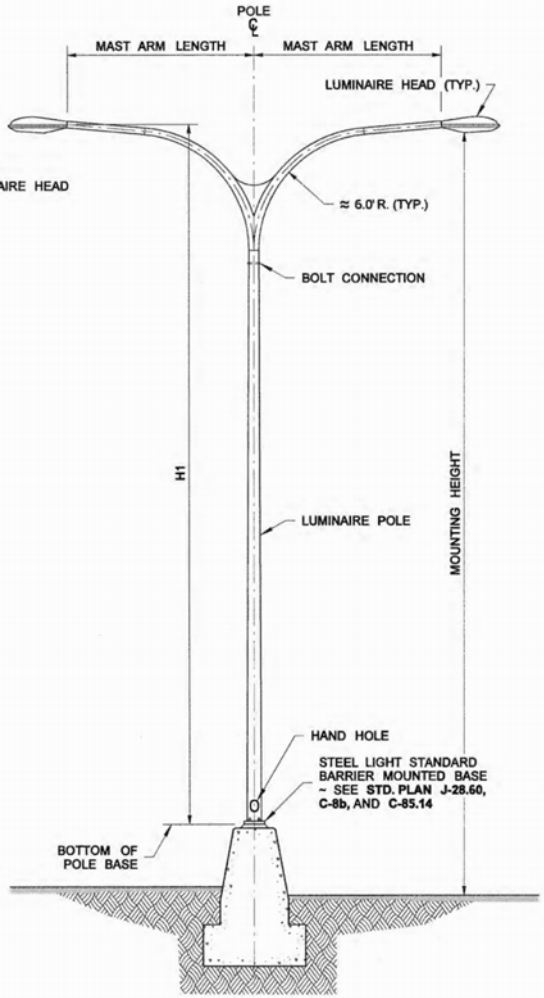

MEDIAN BARRIER-MOUNTED LUMINAIRE
(TYPE 1 MAST ARM SHOWN)

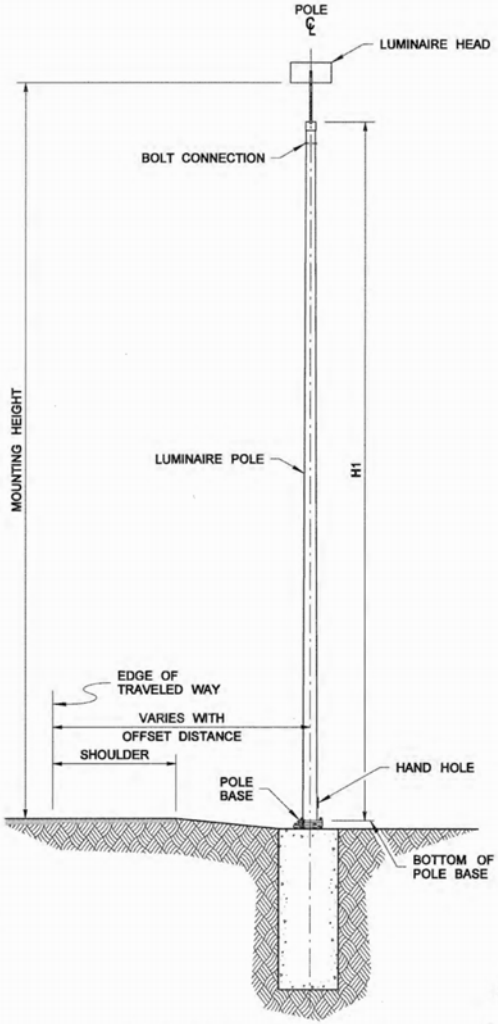

POST TOP-MOUNTED LUMINAIRE
(SLIP BASE SHOWN)

JOHN C. NISBET
STATE OF WASHINGTON
29115
REGISTERED
PROFESSIONAL ENGINEER

STEEL LIGHT STANDARD

STANDARD PLAN J-28.10-01

SHEET 2 OF 2 SHEETS

APPROVED FOR PUBLICATION

STATE DESIGN ENGINEER — DATE 6/11/11

Washington State Department of Transportation

DRAWN BY: BILL BERENS

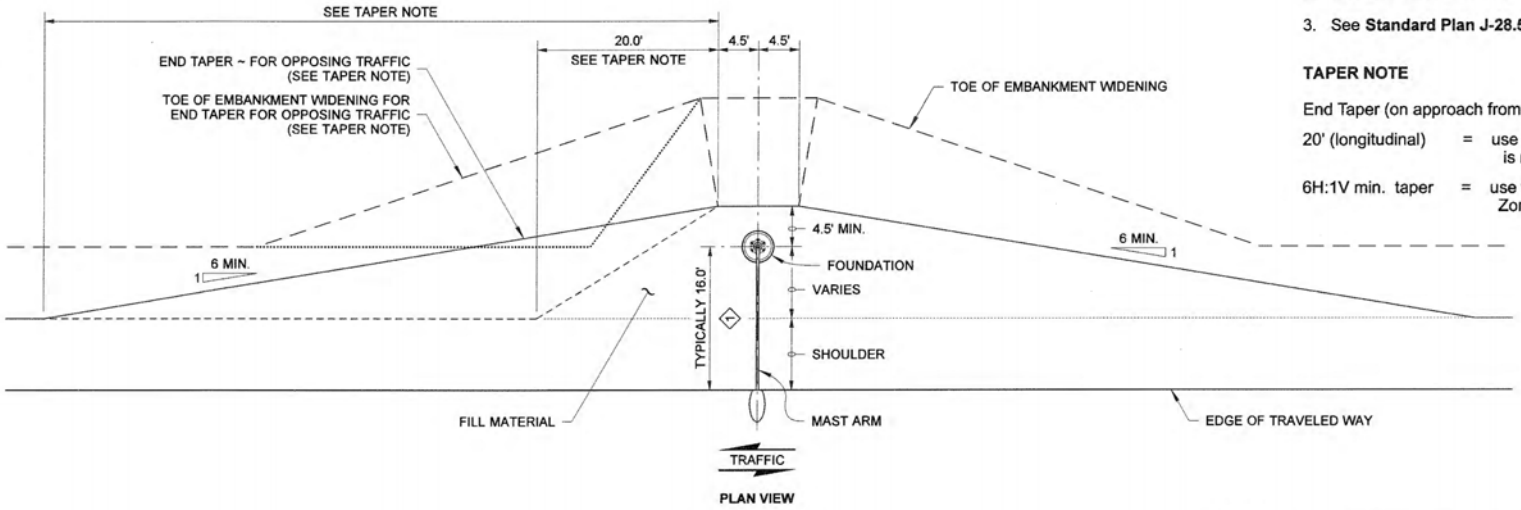

PLAN VIEW

CASES A & B

EMBANKMENTS

1 BASED ON FIELD CONDITIONS, STEEL LIGHT STANDARD PLACEMENT CAN BE ADJUSTED ± 4.0', WHEN APPROVED BY THE PROJECT ENGINEER.

NOTES

1. The Steel Light Standard Placement depicted on this plan is only intended for installations where roadside conditions allow its usage. Roadside conditions may require a special design by the Bridge Office, as determined by the Project Engineer.
2. See **Standard Plan J-28.30** for foundation details and construction methods.
3. See **Standard Plan J-28.50** for pole base and hand hole details.

TAPER NOTE

End Taper (on approach from opposing traffic):

20' (longitudinal)	=	use on one-way roadways or where the Light Standard is not in the Design Clear Zone of the opposing traffic.
6H:1V min. taper	=	use when the Light Standard is in the Design Clear Zone of the opposing traffic.

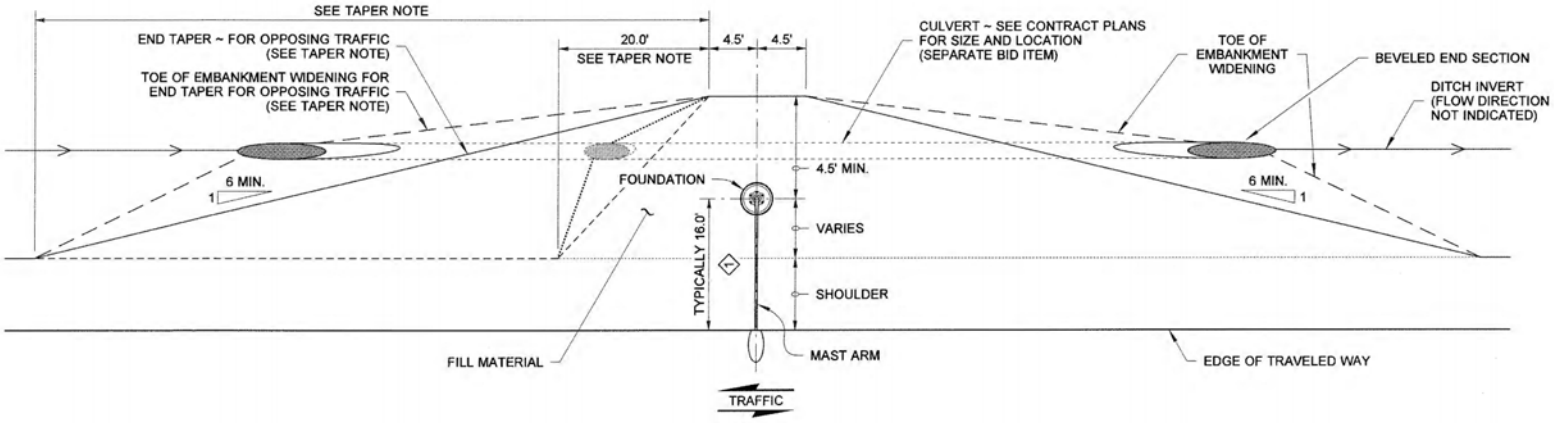

PLAN VIEW

CASE C

DITCH SECTIONS

EXPIRES AUGUST 9, 2007

STEEL LIGHT STANDARD PLACEMENT (SLIP BASE)

STANDARD PLAN J-28.22-00

SHEET 1 OF 2 SHEETS

APPROVED FOR PUBLICATION

STATE DESIGN ENGINEER — DATE 8/7/07

Washington State Department of Transportation

DRAWN BY: BILL BERENS

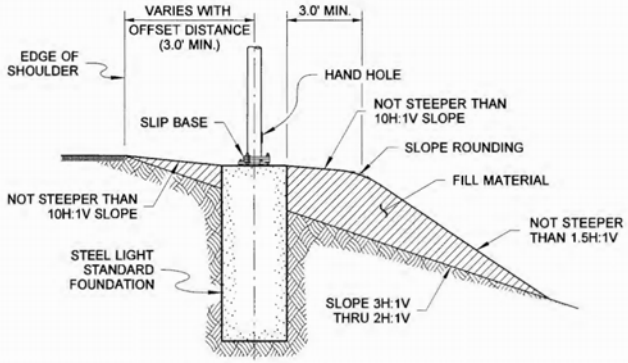

SECTION VIEW

CASE A

SLOPES 3H:1V THRU 2H:1V (MAX.)

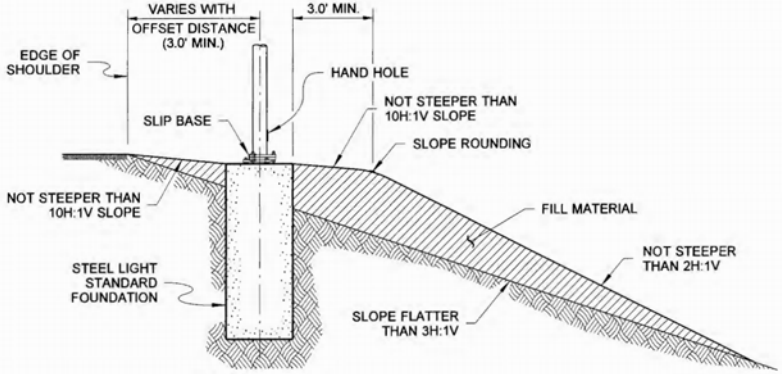

SECTION VIEW

CASE B

SLOPES FLATTER THAN 3H:1V

EMBANKMENTS

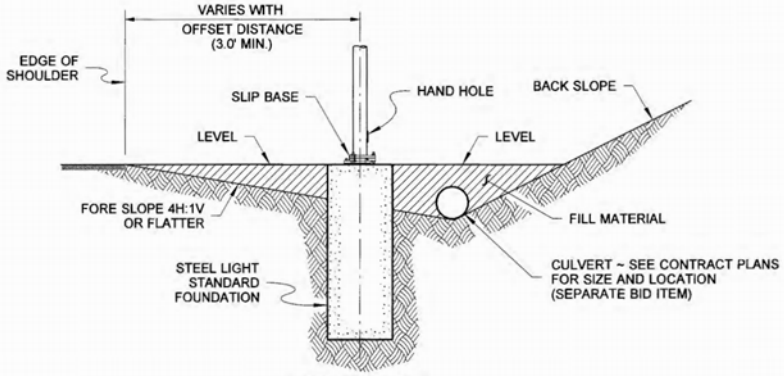

SECTION VIEW

CASE C

FORE SLOPES 4H:1V OR FLATTER

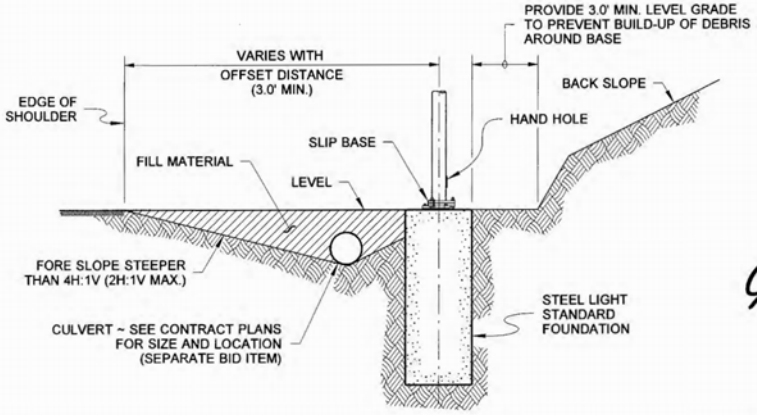

SECTION VIEW

CASE D

FORE SLOPES STEEPER THAN 4H:1V (2H:1V MAX.)

DITCH SECTIONS

EXPIRES AUGUST 9, 2007

STEEL LIGHT STANDARD PLACEMENT (SLIP BASE)

STANDARD PLAN J-28.22-00

SHEET 2 OF 2 SHEETS

APPROVED FOR PUBLICATION

STATE DESIGN ENGINEER 8/7/07 DATE

Washington State Department of Transportation

DRAWN BY: COLBY FLETCHER

MAXIMUM CONCRETE EXPOSURE TABLE (CASE F ONLY)	
SLOPE	HEIGHT (SEE NOTE 3)
1.75H : 1V	1' - 8 1/2"
1.50H : 1V	2' - 0"
1.25H : 1V	2' - 4 3/4"

NOTES

1. See **Standard Plan J-28.30** for foundation details and construction methods.
2. See **Standard Plan J-28.50** for pole base and hand hole details.
3. Values listed in the Table were determined using a 3' - 0" diameter foundation. For design parameters between the values listed, exposure requirements may be interpolated between the values provided.
4. Fill material for Maintenance Pad shall be granular material. Alternately, Crushed Surfacing (Base Course or Top Course) per **Standard Specification 9-03.9(3)** may be used.

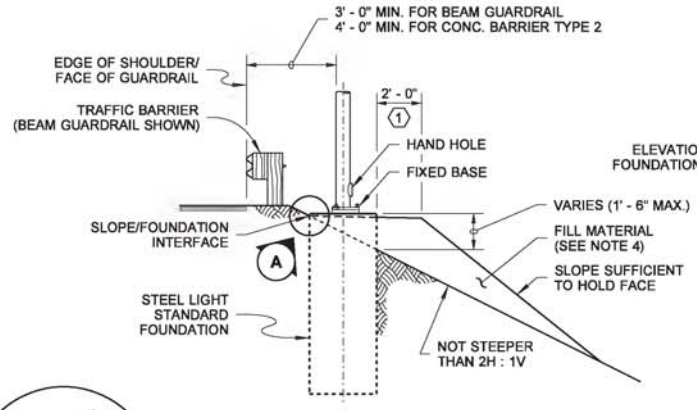

SECTION VIEW

CASE E

SLOPES 2H : 1V OR FLATTER BEHIND TRAFFIC BARRIER

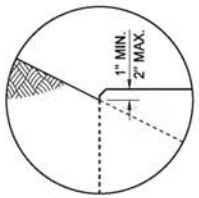

DETAIL A

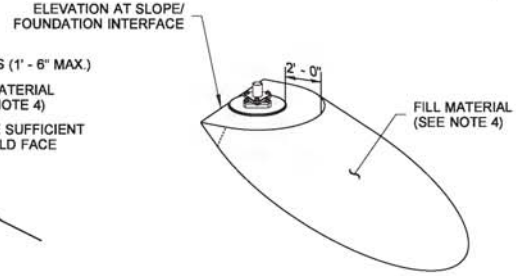

PERSPECTIVE VIEW

CASE E & CASE F

MAINTENANCE PAD

EMBANKMENTS

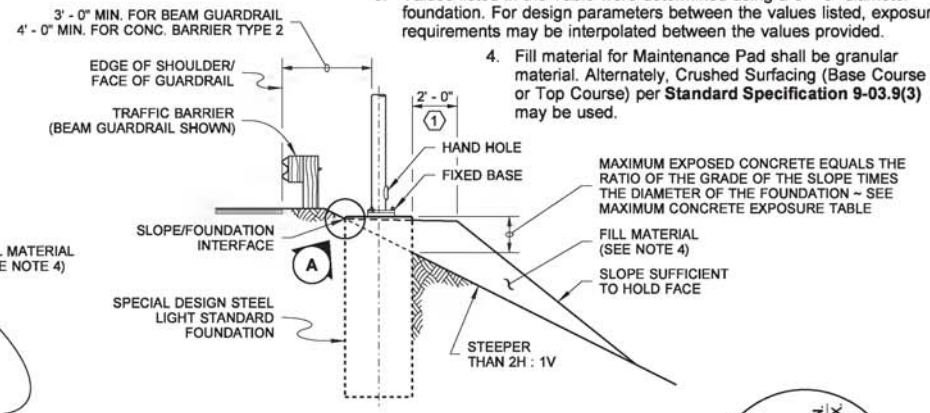

SECTION VIEW

CASE F

SLOPES STEEPER THAN 2H : 1V BEHIND TRAFFIC BARRIER (SPECIAL DESIGN FOUNDATION)

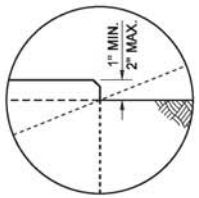

DETAIL B

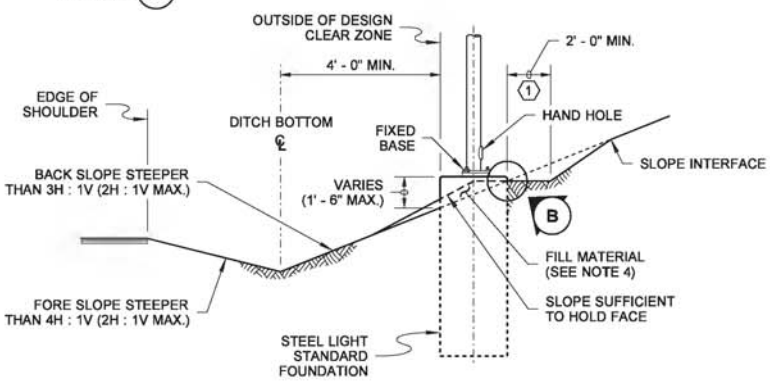

SECTION VIEW

CASE G

ROADSIDE DITCH WITH FORE SLOPE STEEPER THAN 4H : 1V (2H : 1V MAX.)

1 MAINTENANCE PAD ~ SLOPE TO DRAIN AWAY FROM THE FOUNDATION ~ NOT STEEPER THAN 5%

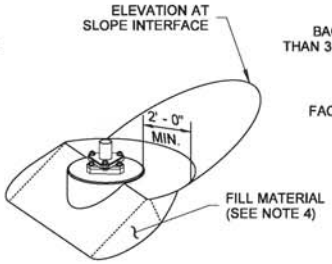

PERSPECTIVE VIEW

CASE G & CASE H

MAINTENANCE PAD

BACK SLOPES

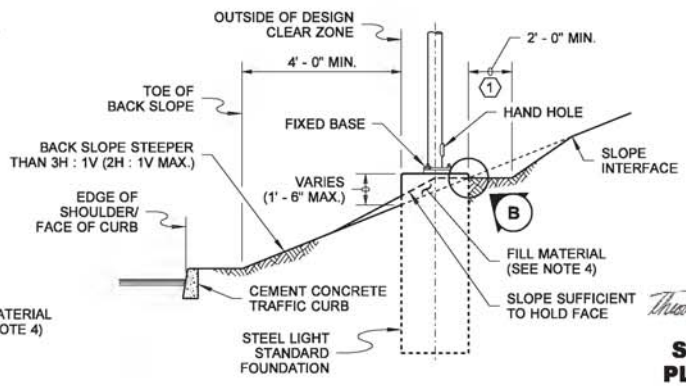

SECTION VIEW

CASE H

CUT SECTION WITH BACK SLOPE STEEPER THAN 3H : 1V (2H : 1V MAX.)

THEODORE JOSEPH BAILEY
STATE OF WASHINGTON
39820
REGISTERED
PROFESSIONAL ENGINEER

Bailey, Ted
May 28 2015 10:11 AM

STEEL LIGHT STANDARD PLACEMENT (FIXED BASE)

STANDARD PLAN J-28.24-01

SHEET 1 OF 1 SHEET

APPROVED FOR PUBLICATION
Bakotich, Pasco
Jun 3 2015 4:23 PM
STATE DESIGN ENGINEER

Washington State Department of Transportation

DRAWN BY: BILL BERENS

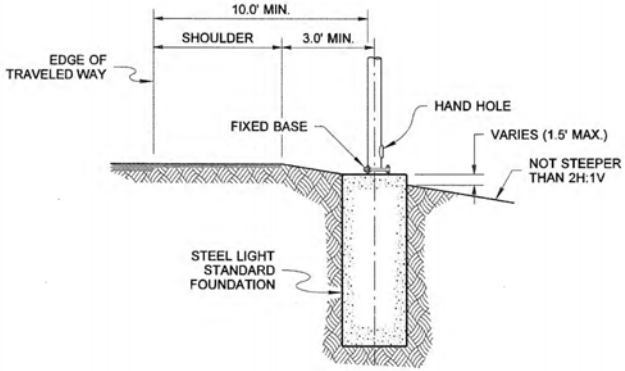

SECTION VIEW

CASE I

POSTED SPEED LIMIT LESS THAN 35 MPH

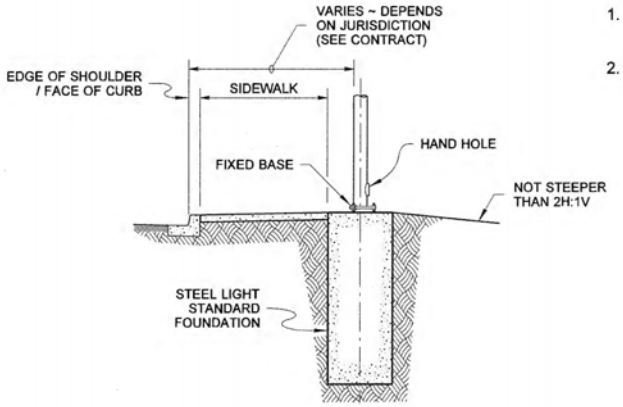

SECTION VIEW

CASE J

POSTED SPEED LIMIT LESS THAN 35 MPH

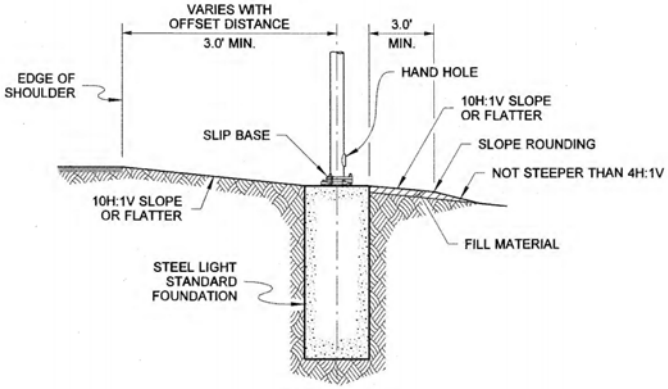

SECTION VIEW

CASE K

ROADWAYS WITH 10H:1V OR FLATTER SIDE SLOPES

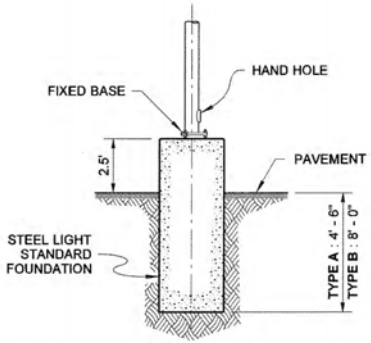

SECTION VIEW

CASE L

PARKING LOTS

NOTES

1. See **Standard Plan J-28.30** for foundation details and construction methods.
2. See **Standard Plan J-28.50** for pole base and hand hole details.

STEEL LIGHT STANDARD PLACEMENT MISCELLANEOUS

STANDARD PLAN J-28.26-01

SHEET 1 OF 1 SHEET

APPROVED FOR PUBLICATION

STATE DESIGN ENGINEER — DATE 12/2/08

Washington State Department of Transportation

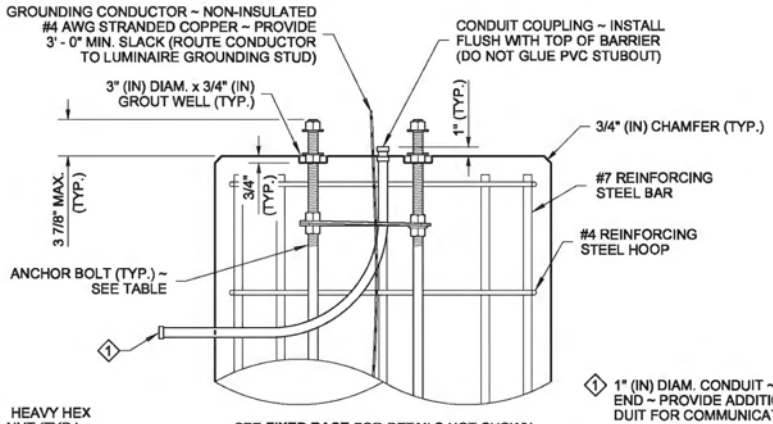

SEE **FIXED BASE** FOR DETAILS NOT SHOWN

PARTIAL ELEVATION VIEW

SLIP BASE

1 1" (IN) DIAM. CONDUIT ~ CAP EACH END ~ PROVIDE ADDITIONAL CONDUIT FOR COMMUNICATION OR SIGNAL CABLE WHERE SHOWN IN THE CONTRACT

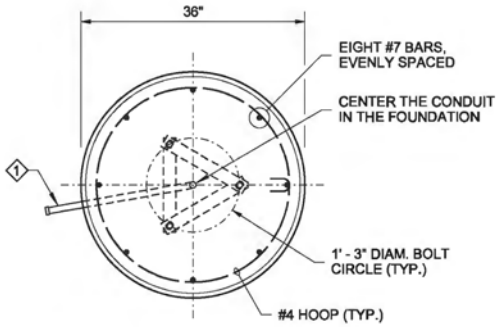

TOP VIEW

FIXED BASE

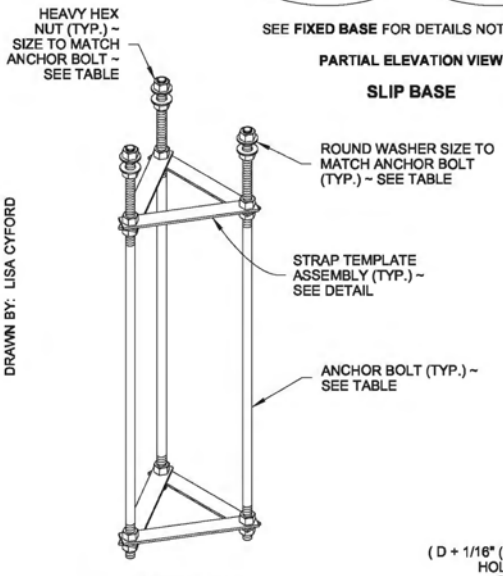

ISOMETRIC VIEW

ANCHOR BOLT ASSEMBLY

(SLIP BASE SHOWN)

ANCHOR BOLT TABLE			
LUMINAIRE HEIGHT (FT) (H1)	MAST ARM TYPE	MAST ARM LENGTH (FT)	ANCHOR BOLT DIAMETER (IN) "D"
20' TO 50'	SINGLE	6' TO 16'	1"
20' TO 50'	DOUBLE	6' TO 8'	1"
20' TO 45'	DOUBLE	10' TO 16'	1"
46' TO 50'	DOUBLE	10' TO 16'	1 1/8"

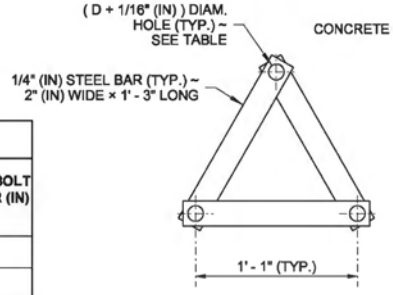

TOP VIEW

STRAP TEMPLATE ASSEMBLY

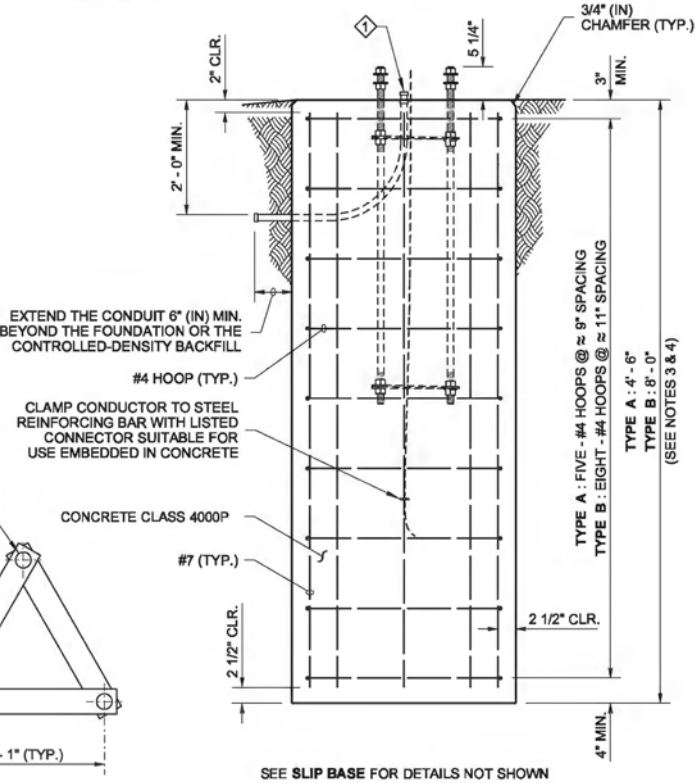

SEE **SLIP BASE** FOR DETAILS NOT SHOWN

ELEVATION VIEW

FIXED BASE

DRAWN BY: LISA CYFORD

NOTES

1. See **Standard Plan J-28.40** for Luminaire Pole base mounting details.
2. The Strap Templates shall be held in place by nuts, 6" (in) from the top of the foundation and 3" (in) from the bottom of the anchor bolts. Eighteen heavy duty hex nuts and six round washers are required for a slip base assembly. Eighteen heavy duty hex nuts and six plate washers are required for a fixed base assembly.
3. Use Steel Light Standard Foundation **Type A** on level ground or slopes not exceeding 4H : 1V. Use **Type B** for slopes steeper than 4H : 1V, but not exceeding 2H : 1V. Slopes steeper than 2H : 1V shall require a special design.
4. These foundations are designed for a minimum of 2000 PSF **(TYPE A)** or 1500 PSF **(TYPE B)** allowable lateral bearing pressure for the soil. A special foundation shall be required for soil with allowable lateral bearing pressure lower than 1500 PSF.
5. The Luminaire Pole height shall not exceed 50' (ft) (**H1**).
6. Slip bases shall not be installed on 50' (ft) (**H1**) poles with Double Mast Arms, nor on poles weighing more than 1000 lbs.
7. Slip bases are required on poles installed inside the Design Clear Zone, and on poles installed behind traffic barrier that are within the traffic barrier deflection zone.
8. Foundations constructed within Media Filter Drains shall be increased in depth by the depth of the Media Filter Drain.
9. Exposed portions of the foundation shall be formed to create a Class 2 surface finish. All forming shall be removed upon completion of foundation construction.
10. For excavation, concrete placement, and backfill options, see METHOD 1 and METHOD 2 on Sheet 2 of 2.
11. The anchor bolts shall be high-strength steel, manufactured from ASTM F1554 Grade 105, with heavy hex nuts and hardened washers. Galvanize the anchor bolts according to ASTM F2329.
12. The foundation shall be grounded in accordance with the requirements of **Standard Specification 8-20.3(4).**
13. See **Standard Plans C-8b** and **C-85.14** for steel light standards on traffic barrier.

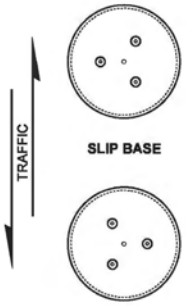

SLIP BASE

FIXED BASE

ANCHOR BOLT LAYOUT

Zeldenrust, Richard
Jun 10 2014 10:37 AM

STEEL LIGHT STANDARD FOUNDATION TYPES A & B

STANDARD PLAN J-28.30-03

SHEET 1 OF 2 SHEETS

APPROVED FOR PUBLICATION
Bakotich, Pasco
Jun 11 2014 1:33 PM
STATE DESIGN ENGINEER

Washington State Department of Transportation

DRAWN BY: LISA CYFORD

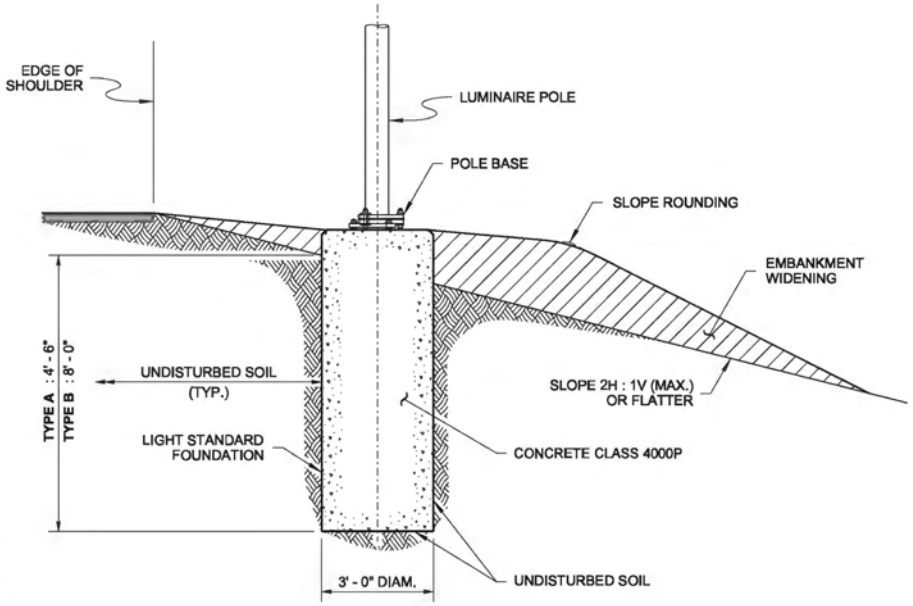

(CASE A SHOWN)

METHOD 1

NO SUBSURFACE FORM

This option is used only when the existing soil in the hole will remain standing and the cement concrete can be placed without causing the soil to collapse. Concrete shall be cast directly against undisturbed soil.

Auger the hole for the foundation. Use a paper or cardboard form to achieve a smooth finish on the final exposed cement concrete. Support the form as necessary to remain plumb.

See **Standard Plans J-28.24** and **J-28.26** for maximum heights of exposed foundation when no embankment widening is to be installed.

Place the concrete foundation.

After concrete has cured, remove the paper or cardboard form portion.

Construct the embankment widening (if required).

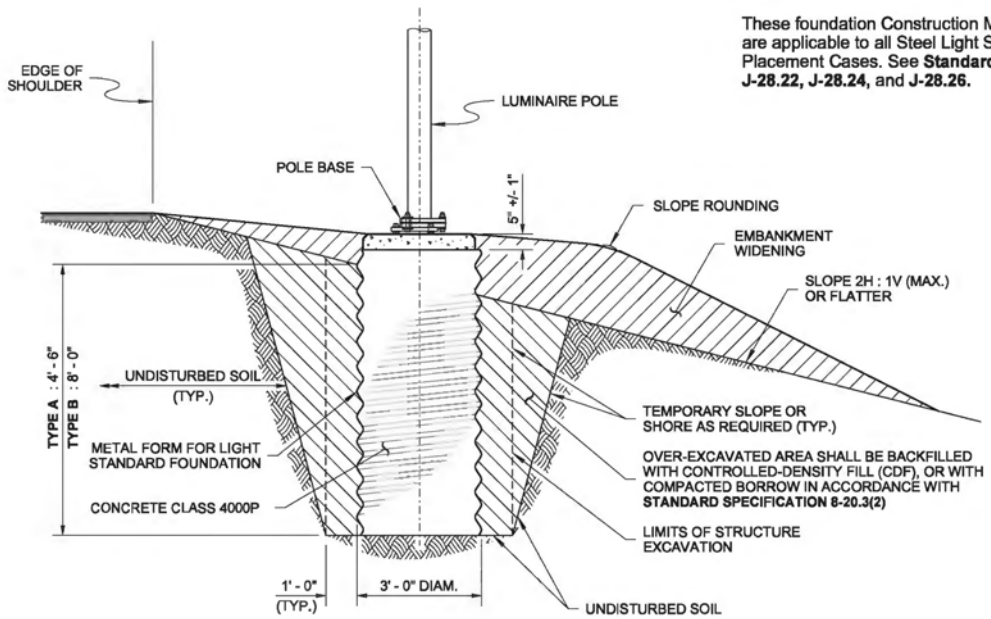

(CASE A SHOWN)

METHOD 2

METAL (SUBSURFACE) FORM REQUIRED

When the existing soil will not retain a vertical face, over-excavate the foundation area and install a 36" (in) diameter corrugated metal (pipe) form. The corrugated metal form shall not extend more than 5" (in) +/- 1" (in) below any portion of the foundation that will remain exposed upon final grading. Continue forming to full height using a paper or cardboard form to achieve a smooth finish on final exposed cement concrete. Support the form as necessary to remain plumb.

See **Standard Plans J-28.24** and **J-28.26** for maximum heights of exposed foundation when no embankment widening is to be installed.

Place the concrete foundation.

After concrete has cured, remove the paper or cardboard form portion.

Backfill with controlled-density fill or compacted borrow in accordance with **Standard Specification 8-20.3(2).**

Construct the embankment widening (if required).

NOTE

These foundation Construction Methods are applicable to all Steel Light Standard Placement Cases. See **Standard Plans J-28.22, J-28.24,** and **J-28.26.**

RICHARD P. ZELDENRUST
STATE OF WASHINGTON
25470
STRUCTURAL ENGINEER
PROFESSIONAL ENGINEER

Zeldenrust, Richard
Jun 10 2014 10:38 AM

STEEL LIGHT STANDARD FOUNDATION TYPES A & B

STANDARD PLAN J-28.30-03

SHEET 2 OF 2 SHEETS

APPROVED FOR PUBLICATION
Bakotich, Pasco
Jun 11 2014 1:33 PM
STATE DESIGN ENGINEER
Washington State Department of Transportation

CONSTRUCTION METHODS

DRAWN BY: FERN LIDDELL

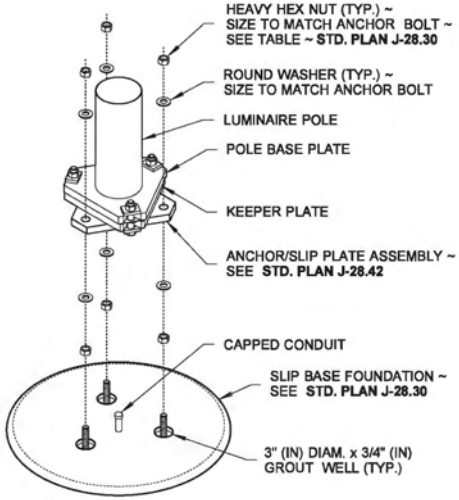

EXPLODED VIEW

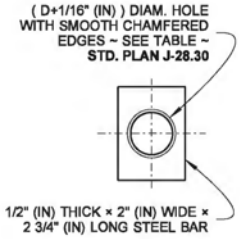

PLATE WASHER DETAIL

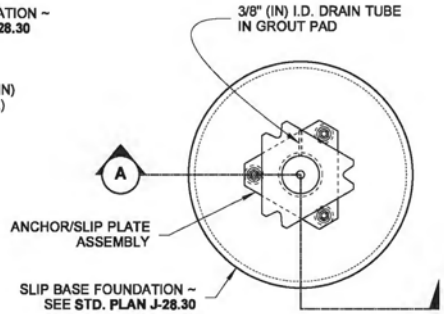

PLAN VIEW

SLIP BASE

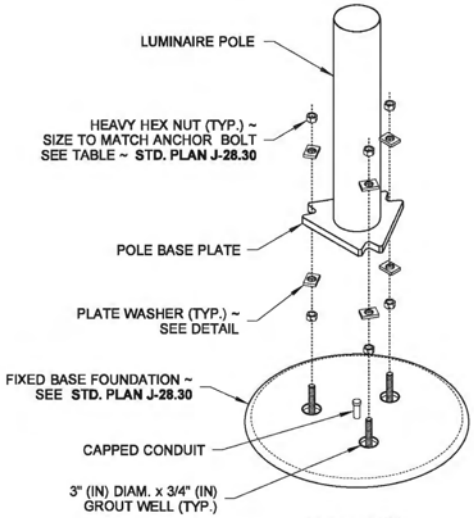

EXPLODED VIEW

NOTES

1. 50' (ft) **(H1)** poles with double mast arms or poles weighing in excess of 1000 LBS shall not be installed on a slip base.
2. Galvanizing shall be in accordance with AASHTO M 111.
3. See **Standard Plans C-8b, C-85.15,** and **J-28.60** for foundation and base plate requirements when light standards are mounted on cement concrete traffic barrier.
4. See **Standard Specification Sections 6-03.3(33)** and **8-20.3 (4)** for the torque requirements for all of the anchor bolt installations. Install 1" (in) diameter clamping bolts in all slip bases to **a torque of 95 Foot-Pounds** - See **Standard Specification Section 8-20.3 (13)A. DO NOT OVERTIGHTEN.** After state inspection, burr threads to prevent nut rotation.
5. For anchor bolt Diameter " **D** ", see table, **Standard Plan J-28.30**.

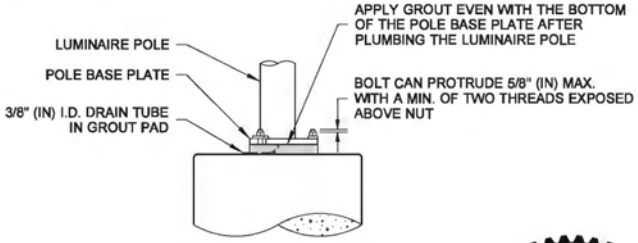

ASSEMBLED AND GROUTED

ELEVATION VIEW

FIXED BASE

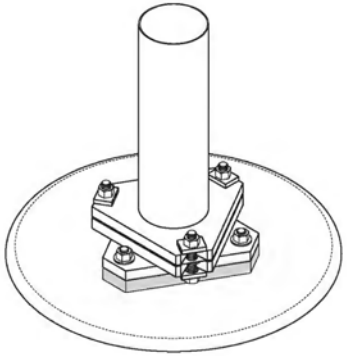

ASSEMBLED

ISOMETRIC VIEW

SLIP BASE

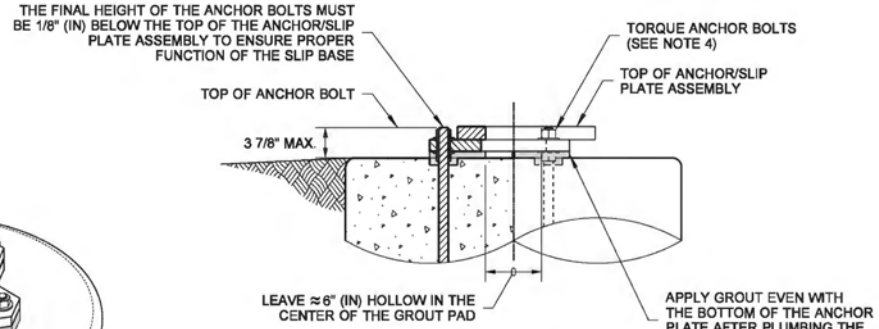

SECTION A

(CONDUIT NOT SHOWN)

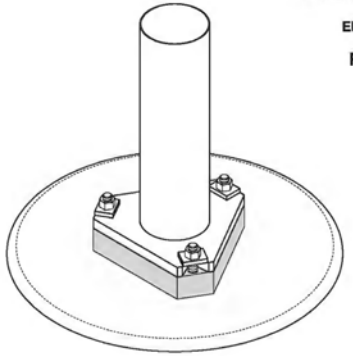

ASSEMBLED

ISOMETRIC VIEW

FIXED BASE

Zeldenrust, Richard
Jun 10 2014 10:39 AM

STEEL LIGHT STANDARD BASE MOUNTING

STANDARD PLAN J-28.40-02

SHEET 1 OF 1 SHEET

APPROVED FOR PUBLICATION

Bakotich, Pasco
Jun 11 2014 1:33 PM

STATE DESIGN ENGINEER

Washington State Department of Transportation

DRAWN BY: BILL BERENS

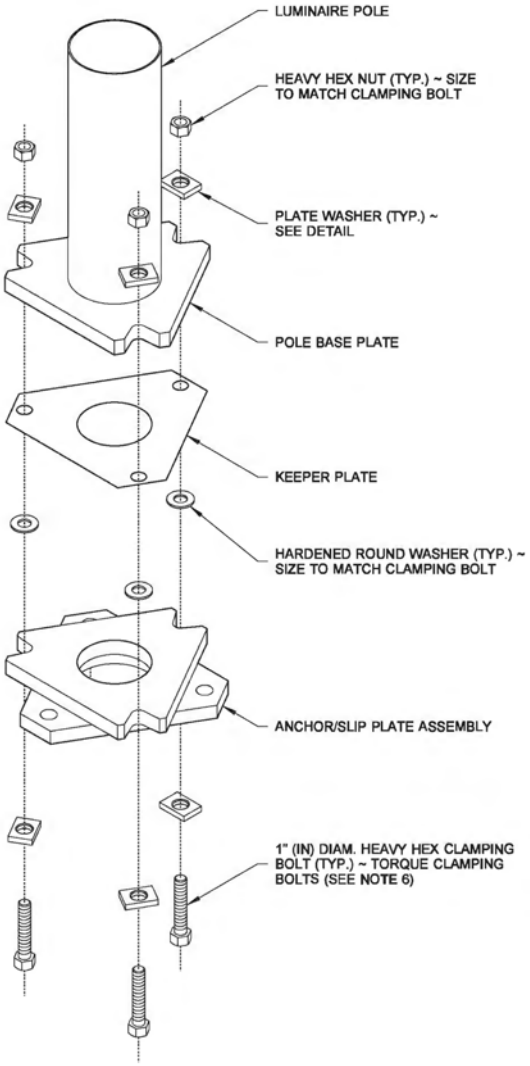

EXPLODED

ISOMETRIC VIEW

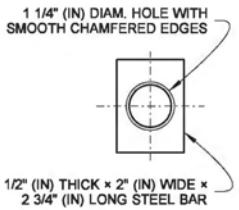

PLATE WASHER DETAIL

CLAMPING BOLT TABLE			
LUMINAIRE HEIGHT (FT) (H1)	MAST ARM TYPE	MAST ARM LENGTH (FT)	CLAMPING BOLT DIAMETER (IN) " D "
20' TO 50'	SINGLE	6' TO 16'	1"
20' TO 45'	DOUBLE	6' TO 8'	1"
46' TO 50'	DOUBLE	6' TO 8'	◇1
20' TO 45'	DOUBLE	10' TO 16'	◇1
46' TO 50'	DOUBLE	10' TO 16'	◇1

◇1 SLIP BASE NOT ALLOWED

NOTES

1. 50' (ft) **(H1)** poles with double mast arms or poles weighing in excess of 1000 lbs. shall not be installed on a slip base.
2. The Slip and Anchor Plates shall be manufactured from ASTM A572 GR.50 or ASTM A588. All Slip Plate notched surfaces shall be finished smooth.
3. The clamping bolts shall be high-strength steel, manufactured from AASHTO M 164, with heavy hex nut and hardened washer. Galvanize the Clamping Bolts according to AASHTO M 232.
4. Round and smooth all edges along wire-way to protect the conductors. See **Standard Plan J-28.70** for wiring details.
5. Galvanize the Anchor/Slip Plate after fabrication according to AASHTO M 111.
6. Clamping Bolt diameters may vary on existing installations. Replace them with the same size as the originals when repairing or reusing a luminaire pole.
   For 1" (in) clamping bolts, tighten to 95 ft-lbs.
   For 1 1/4" (in) clamping bolts, tighten to 104 ft-lbs.
   DO NOT OVERTIGHTEN. After state inspection, burr threads to prevent nut rotation.

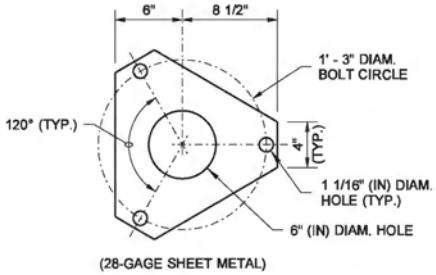

(28-GAGE SHEET METAL)

TOP VIEW

KEEPER PLATE

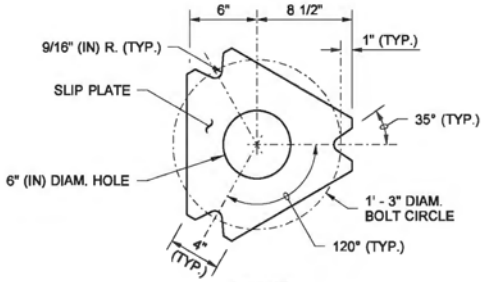

TOP VIEW

SLIP PLATE

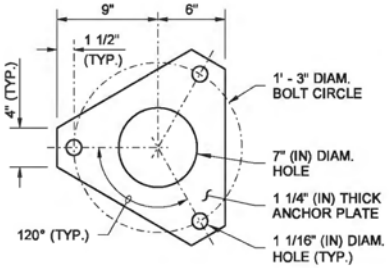

TOP VIEW

ANCHOR PLATE

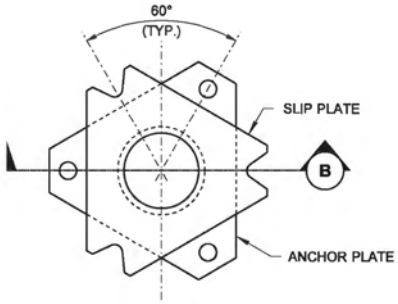

TOP VIEW

ANCHOR/SLIP PLATE ASSEMBLY

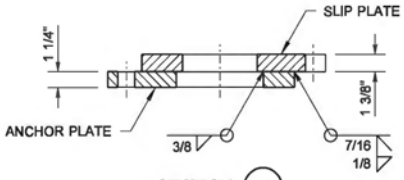

SECTION B

Zeldenrust, Richard
Jun 10 2014 10:40 AM

STEEL LIGHT STANDARD ANCHOR/SLIP PLATE FOR SLIP BASE

STANDARD PLAN J-28.42-01

SHEET 1 OF 1 SHEET

APPROVED FOR PUBLICATION

Bakotich, Pasco
Jun 11 2014 1:34 PM

STATE DESIGN ENGINEER

Washington State Department of Transportation

BASE TABLE				
ADAPTOR TYPE	ANCHOR BOLT (IN) ⟨1⟩	BOLT CIRCLE DIAMETER (IN) "BC" ⟨2⟩	EXISTING BASE TYPE	LUMINAIRE HEIGHT (± 2' - 6")
A-1	1"	11"	WELDED PLATE	⟨3⟩
A-2	1"	12 1/4"	CAST ALUMINUM	⟨3⟩
A-3	1"	12 3/4"	STEEL TRANSFORMER	⟨3⟩
A-4	1 1/8"	14 1/8"	2-PC. ALUM. CLAMP	⟨4⟩
A-5	1 1/4"	14 1/8"	2-PC. ALUM. CLAMP	40'

⟨1⟩ USE MATCHING DIAMETER FOR THREADED STUDS.

⟨2⟩ CONTRACTOR SHALL VERIFY BOLT CIRCLE "BC" IN THE FIELD BEFORE ORDERING. IF "BC" OR ANCHOR BOLT SIZES DIFFER FROM THOSE LISTED, CONTACT HQ BRIDGE AND STRUCTURES OFFICE.

⟨3⟩ 40' (FT) LUMINAIRE W/ 1 x 16' (FT) (MAX.) MAST ARM OR 35' (FT) LUMINAIRE W/ 2 x 16' (FT) MAST ARMS.

⟨4⟩ 50' (FT) LUMINAIRE W/ 1 x 16' (FT) (MAX.) MAST ARM OR 40' (FT) LUMINAIRE W/ 2 x 16' (FT) MAST ARMS - TOTAL WEIGHT 1000 LBS (MAX.).

DRAWN BY: COLBY FLETCHER

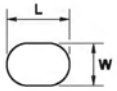

ANCHOR PLATE SLOT DETAIL

ANCHOR PLATE SLOT TABLE		
ANCHOR BOLT DIAMETER (IN)	SIZE	
	W (IN)	L (IN)
1"	1 1/4"	2"
1 1/8"	1 1/4"	2"
1 1/4"	1 1/2"	2 1/4"

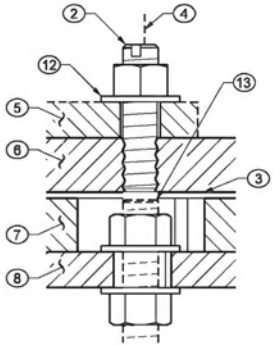

DETAIL (A)

(TYP. OF FOUR PLACES)

CONSTRUCTION NOTES

⟨1⟩ Wire brush existing threads.

⟨2⟩ Apply two coats of galvanizing paint (per **Standard Specification 9-08.1(2)B**).

⟨3⟩ Tighten bolt by "Turn of Nut" method (per **Standard Specification 6-03.3(33)**).

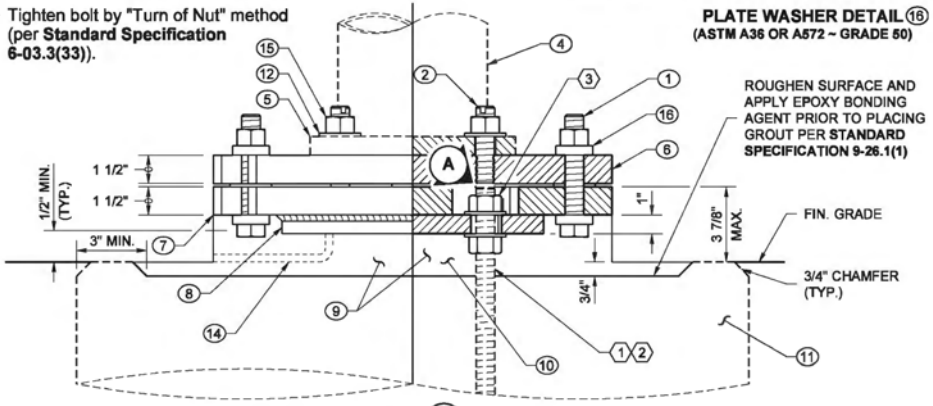

SECTION (1)

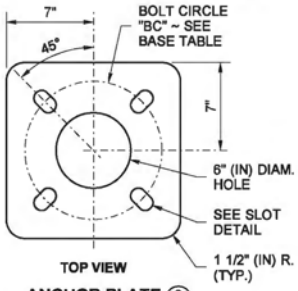

ANCHOR PLATE (8)

KEY

(1) CLAMPING BOLTS, 7/8" (IN) DIAM. HEX HEAD BOLT AND NUT, TWO PLATE WASHERS, ONE HARDENED ROUND WASHER, 87 FT-LBS TORQUE (THREE CLAMPING BOLT ASSEMBLIES PER SLIP BASE) (**PER ASTM A325**)

(2) THREADED SLOTTED STUD ~ SEE BASE TABLE FOR DIAMETER, HARDENED WASHER, AND HEAVY HEX NUT (FOUR PER BASE PLATE) ~ INSERT STUD AND CENTER PUNCH AT BOTTOM PERIPHERY TO LOCK TAPPED STUD IN PLACE PRIOR TO GALVANIZING (**PER ASTM F1554 ~ GRADE 105**)

(3) KEEPER PLATE ~ 0.0149" (IN) 28 GAGE PLATE (**PER ASTM A653 ~ COATING DESIGNATION G90**)

(4) POLE WALL (EXISTING)

(5) POLE BASE PLATE (EXISTING)

(6) TOP SLIP PLATE (**PER ASTM A36**)

(7) BOTTOM SLIP PLATE (**PER ASTM A36**)

(8) ANCHOR PLATE (**PER ASTM A36**)

(9) REMOVE GROUT (EXISTING WITH DRAIN)

(10) NEW GROUT PAD WITH DRAIN

(11) FOUNDATION (EXISTING)

(12) HARDENED WASHER (**PER ASTM F436**)

(13) ANCHOR BOLT (EXISTING) ~ TRIM TO CLEAR SLIP PLATE BY 1/8" (IN) MIN.

(14) 3/8" (IN) DIAM DRAIN TUBE (PER **STANDARD SPECIFICATION 9-29.2(3)**)

(15) HEAVY HEX NUT (TYP.) (**PER ASTM A563 ~ GRADE DH**)

(16) PLATE WASHER

NOTES

1. The purpose of this plan is to provide the details for retrofitting a 4-bolt frangible base with a slip base assembly.
2. Existing anchor bolts shall be inspected for corrosion, thread damage, and galvanizing. To minimize galvanic corrosion between dissimilar metals, ensure galvanizing remains intact while installing aluminum luminaire.
3. After bolting the bottom slip plate assembly to the foundation, fill the slotted bolt holes with mastic per **Standard Specification 9-08.7**.
4. Grade around the foundation to ensure the stub height does not exceed 3 7/8" (in). For grading requirements, see **Standard Plan J-28.22**.
5. Removal of the frangible base from the existing base plate is required.
6. Misaligned anchor bolts shall be removed and replaced.
7. This adaptor shall be used only on luminaire poles that contain a handhole. Replace standards and foundation when the handhole is located in the frangible base.
8. Galvanize the anchor plate, bottom slip plate, and top slip plate after fabrication according to **ASTM A123**.
9. Galvanize all hardware according to **ASTM F2329**.

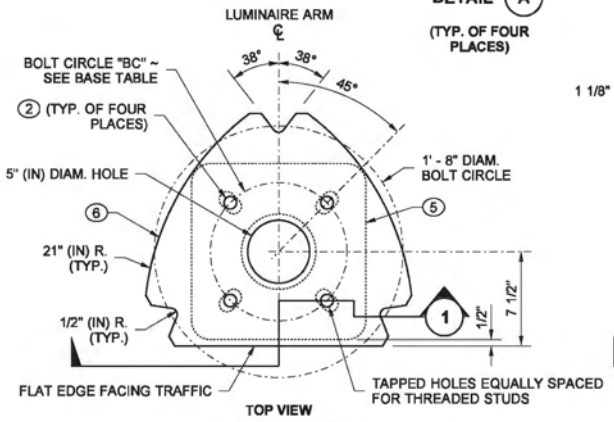

TOP SLIP PLATE (6)

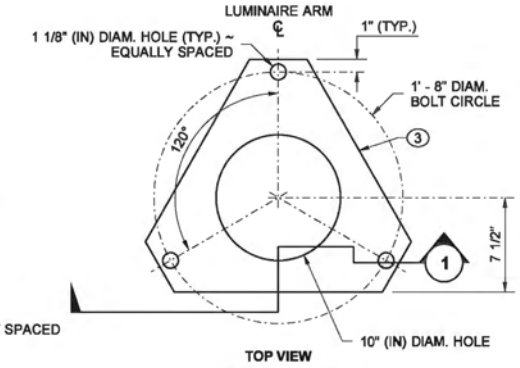

KEEPER PLATE (3)

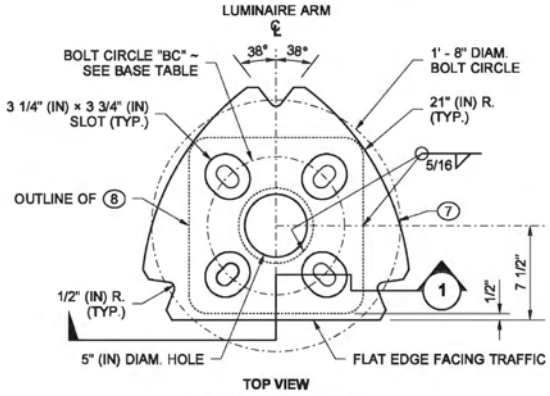

BOTTOM SLIP PLATE (7)

Zeldenrust, Richard
Jun 10 2014 1:02 PM

SLIP BASE ADAPTOR FOR 4-BOLT LIGHT STANDARD BASE STANDARD PLAN J-28.43-00

SHEET 1 OF 1 SHEET

APPROVED FOR PUBLICATION
Bakotich, Pasco
Jun 11 2014 1:35 PM
STATE DESIGN ENGINEER

Washington State Department of Transportation

DRAWN BY: LISA CYFORD

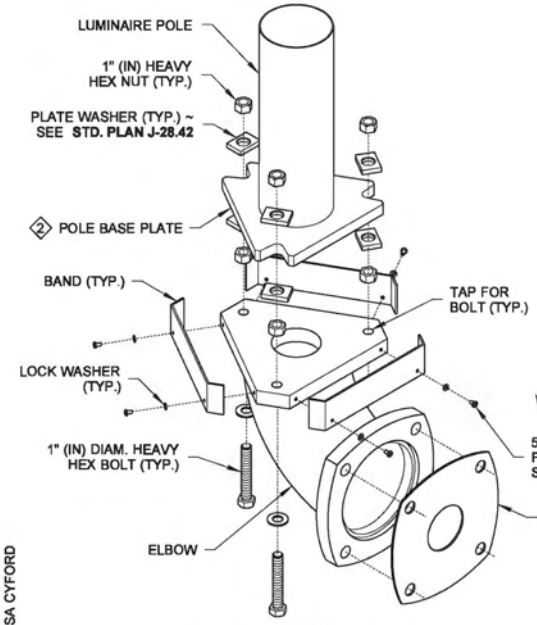

EXPLODED ISOMETRIC VIEW

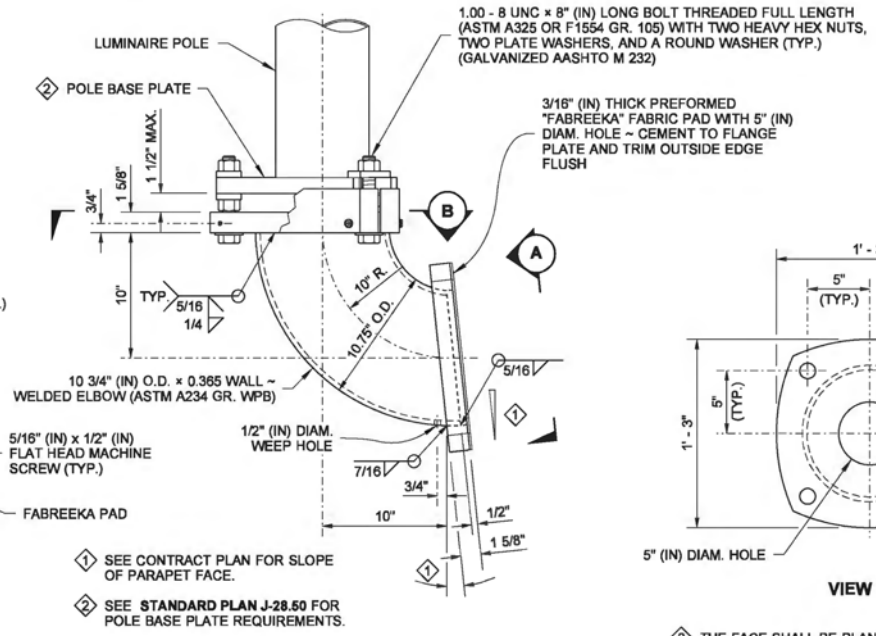

NOTES

1. Galvanize the Elbow Assembly after fabrication according to AASHTO M 111.
2. See **Standard Plan J-28.50** for Pole Base and Hand Hole details.
3. The presence of pedestrian railing shall be verified prior to light standard fabrication. When pedestrian railing is present or to be installed, locate hand hole as detailed in the Bridge Pedestrian Barrier details.

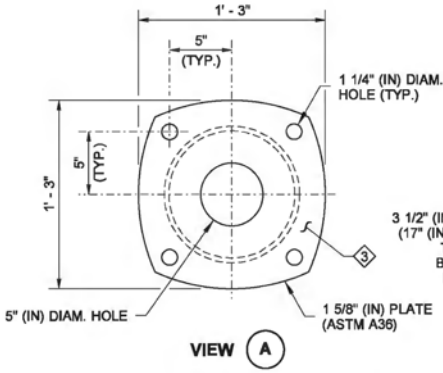

VIEW (A)

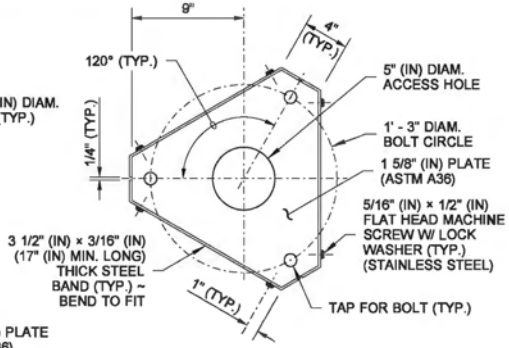

SECTION (B)

3 THE FACE SHALL BE PLANE AFTER FABRICATION, TO PROVIDE A SEAL BETWEEN THE BARRIER AND THE ELBOW.

STEEL LIGHT STANDARD ELBOW DETAIL

FOR LUMINAIRE POLES WITH SINGLE MAST ARM 12' - 0" OR LESS AND DOUBLE MAST ARMS 8' - 0" OR LESS, MOUNTED ON BRIDGE OR RETAINING WALLS.

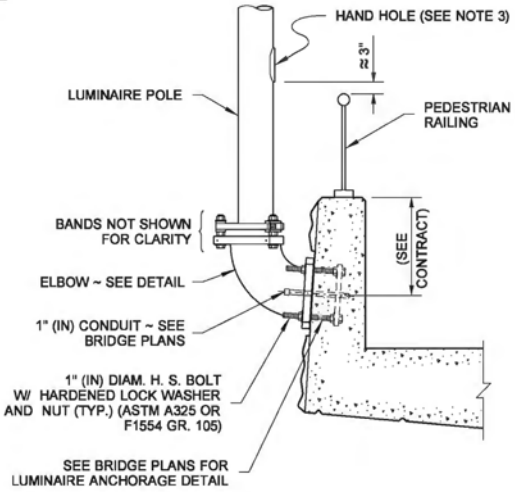

BRIDGE PEDESTRIAN BARRIER

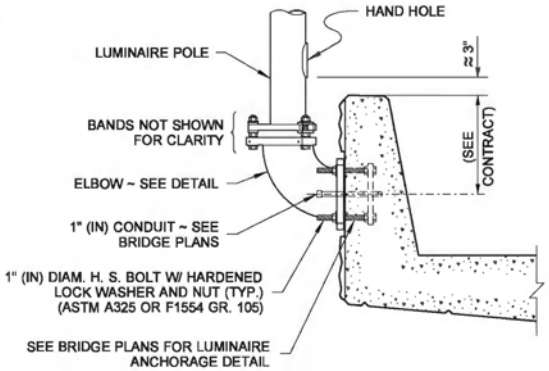

SINGLE-SLOPE BRIDGE TRAFFIC BARRIER

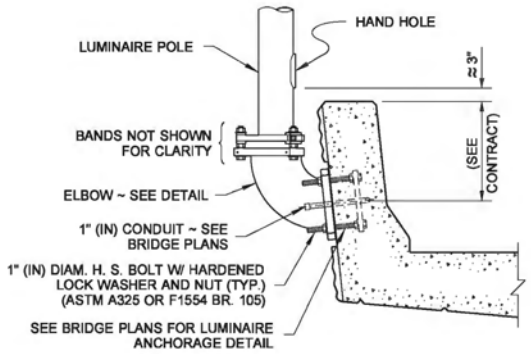

F-SHAPE BRIDGE TRAFFIC BARRIER

WHEN TRAFFIC BARRIER HEIGHT IS 42" (IN), MAINTAIN APPROX. HEIGHT FROM TOP OF BARRIER TO HAND HOLE SHOWN.

TYPICAL SECTIONS

Zeldenrust, Richard
Jun 10 2014 10:42 AM

STEEL LIGHT STANDARD ELBOW MOUNTING ON BRIDGE & RETAINING WALL

STANDARD PLAN J-28.45-02

SHEET 1 OF 1 SHEET

APPROVED FOR PUBLICATION

Bakotich, Pasco
Jun 11 2014 1:35 PM

STATE DESIGN ENGINEER

Washington State Department of Transportation

DRAWN BY: LISA CYFORD

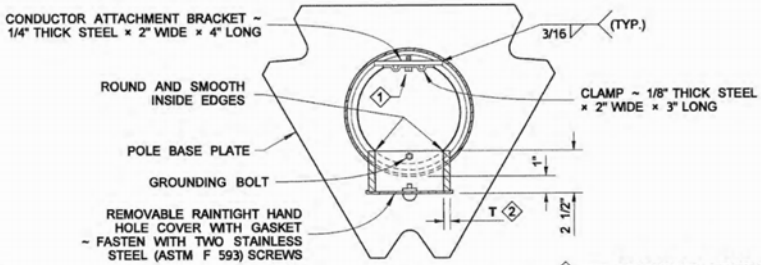

TYPICAL HAND HOLE ORIENTATION

VIEW (A)

1. THE **CONDUCTOR ATTACHMENT** CONFIGURATIONS VARY AMONG DIFFERENT MANUFACTURERS. CONDUCTOR ATTACHMENTS ARE REQUIRED ON ALL POLES, FIXED OR SLIP BASE.
2. T = RIM PLATE THICKNESS BY LUMINAIRE POLE FABRICATOR.

NOTES

1. Pole Base Plate for a Slip Base design shall be 1 1/4" steel manufactured from ASTM A572 GR. 50 or ASTM A588. Pole Base Plate for a Fixed Base design shall be either 1 1/4" steel manufactured from ASTM A572 GR. 50, ASTM A588, or 1 1/2" manufactured from ASTM A36. All Pole Base Plate notched surfaces shall be finished smooth.
2. Round and smooth all edges along wire-way to protect conductors. See **Standard Plan J-28.70** for wiring details.
3. Galvanizing shall be in accordance with AASHTO M 111.
4. See **Standard Plans C-8b, C-85.14,** and **J-28.60** for foundation and base plate requirements when steel light standards are mounted on concrete traffic barrier.
5. See **Standard Plan J-28.42** for details when Slip Base is required.

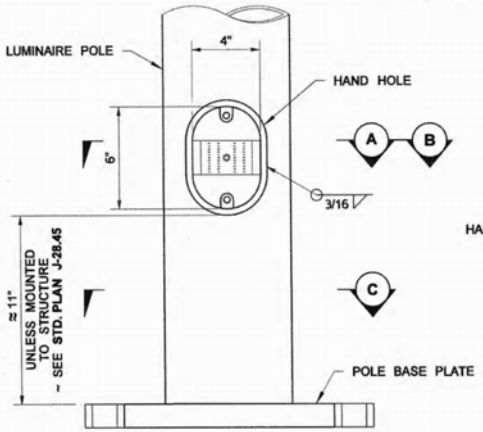

(COVER NOT SHOWN FOR CLARITY)

ELEVATION VIEW

CONFIGURATION AND LOCATION OF THE HAND HOLE VARIES AMONG MANUFACTURERS ~ MINIMUM SIZE OPENING SHOWN

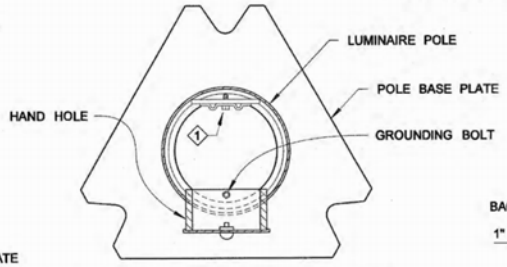

FOR DETAILS NOT SHOWN, SEE VIEW (A) ABOVE

ORIENTATION FOR INSTALLATION ON BRIDGE OR RETAINING WALL ~ SEE **STANDARD PLAN J-28.45**

VIEW (B)

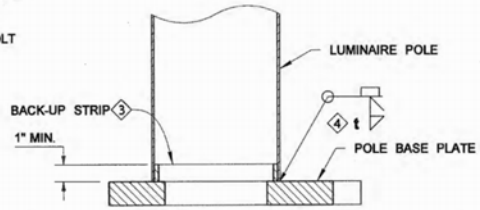

3. 1/4" THICK, OR NO THINNER THAN POLE WALL THICKNESS. TACK WELD OR SEAL WELD TO BASE PLATE.
4. t = SIZE OF FILLET WELD BY LUMINAIRE POLE FABRICATOR.

SECTION (D)

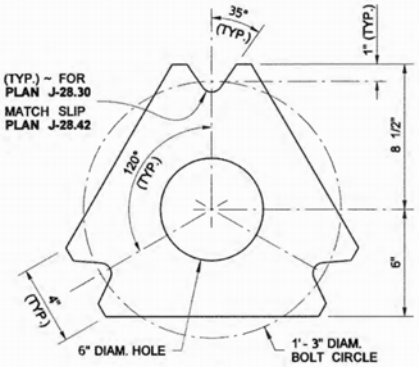

FOR PLATE THICKNESS, REFER TO NOTE 1

TOP VIEW

POLE BASE PLATE DETAIL

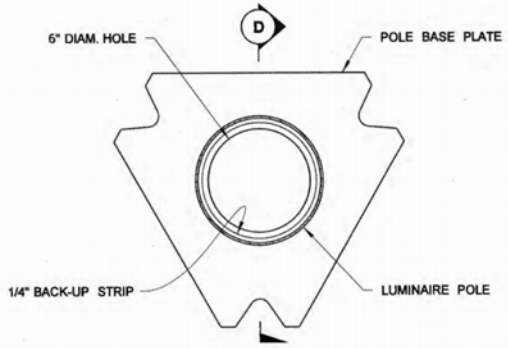

VIEW (C)

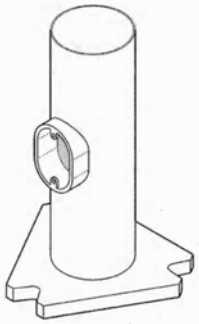

ISOMETRIC VIEW

5/16/11

STEEL LIGHT STANDARD POLE BASE AND HAND HOLE DETAILS

STANDARD PLAN J-28.50-02

SHEET 1 OF 1 SHEET

APPROVED FOR PUBLICATION

STATE DESIGN ENGINEER — DATE 6/2/11

Washington State Department of Transportation

DRAWN BY: LISA CYFORD

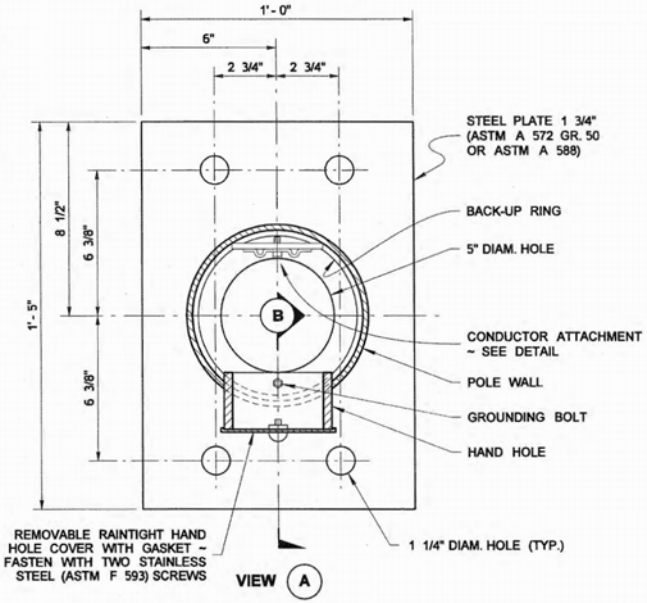

VIEW (A)

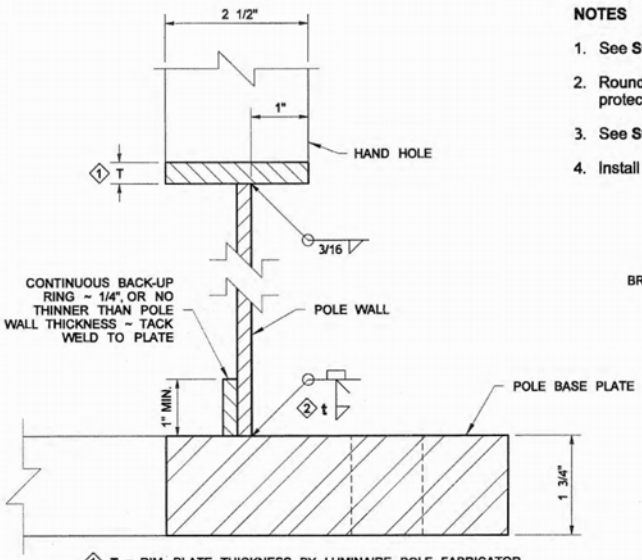

1 T = RIM PLATE THICKNESS BY LUMINAIRE POLE FABRICATOR

2 t = SIZE OF FILLET WELD BY LUMINAIRE POLE FABRICATOR

SECTION (B)

NOTES

1. See **Standard Plans C-8b** and **C-85.14** for foundation and anchor bolt details.
2. Round and smooth all edges around hand hole and along the wire-way to protect the conductors.
3. See **Standard Plan J-28.70** for wiring details.
4. Install grout after plumbing the pole.

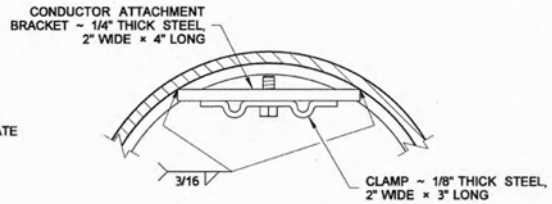

CONDUCTOR ATTACHMENT DETAIL

CONFIGURATIONS VARY AMONG DIFFERENT MANUFACTURERS

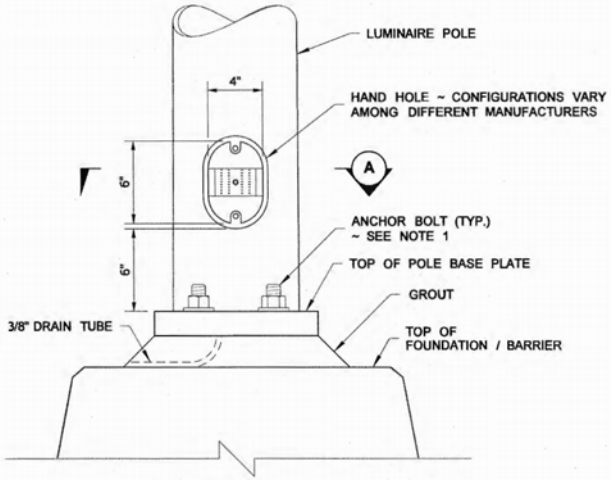

SEE NOTE 4

PLACEMENT DETAIL

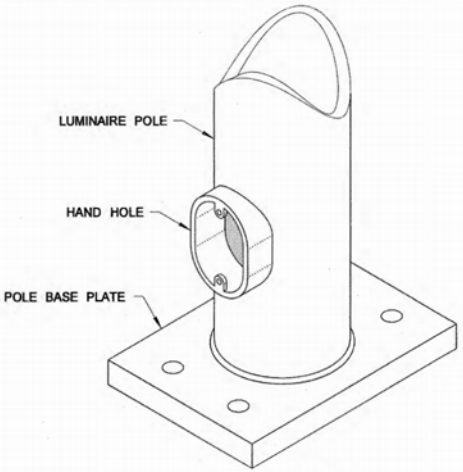

ISOMETRIC VIEW

5/16/11

STEEL LIGHT STANDARD BARRIER MOUNTED BASE

STANDARD PLAN J-28.60-01

SHEET 1 OF 1 SHEET

APPROVED FOR PUBLICATION

STATE DESIGN ENGINEER — DATE 6/2/11

Washington State Department of Transportation

DRAWN BY: LISA CYFORD

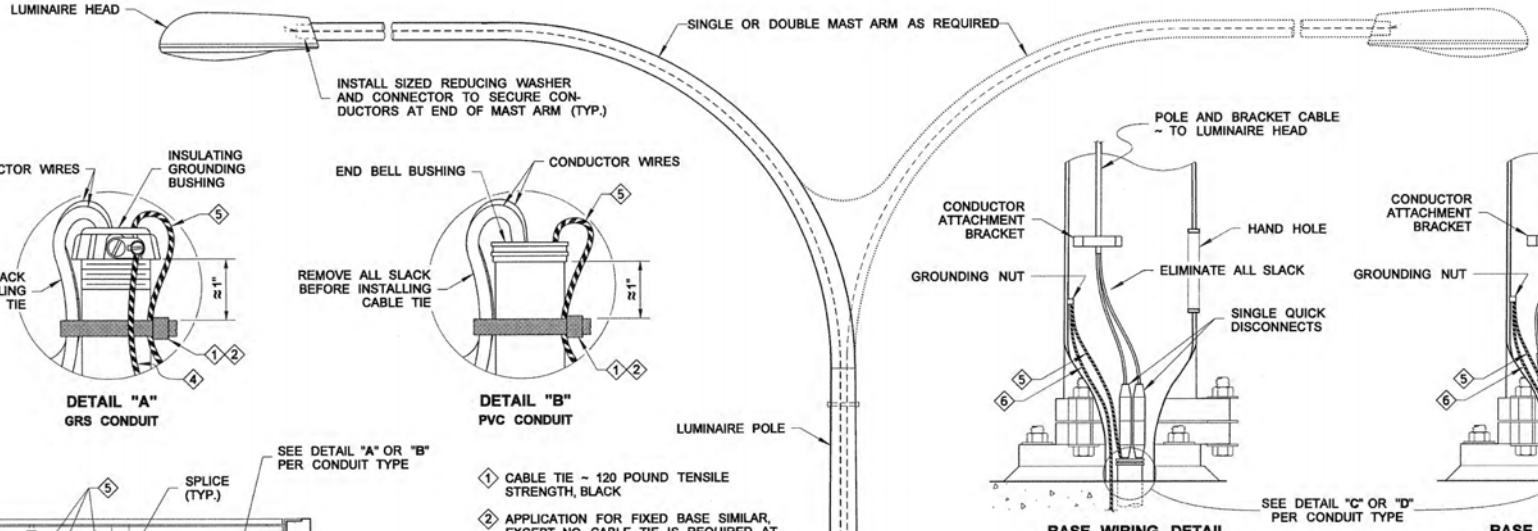

DETAIL "A"
GRS CONDUIT

DETAIL "B"
PVC CONDUIT

BASE WIRING DETAIL FOR SINGLE MAST ARM
(SLIP BASE SHOWN)

BASE WIRING DETAIL FOR DOUBLE MAST ARMS
(SLIP BASE SHOWN)

1. CABLE TIE ~ 120 POUND TENSILE STRENGTH, BLACK
2. APPLICATION FOR FIXED BASE SIMILAR, EXCEPT NO CABLE TIE IS REQUIRED AT JUNCTION BOX
3. 24" SLACK REQUIRED TO ALLOW QUICK DISCONNECTS TO BE PULLED OUTSIDE HAND HOLE 6" MIN.
4. BONDING JUMPER WIRE FOR GRS STEEL
5. EQUIPMENT GROUNDING CONDUCTOR
6. GROUNDING CONDUCTOR ~ FROM FOUNDATION
7. DOUBLE QUICK DISCONNECTS ~ PULL DOWN TIGHT TO CONDUIT (SHOWN LEFT UP FOR CLARITY)

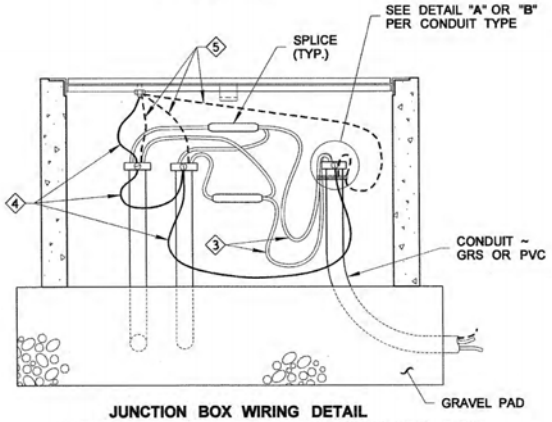

JUNCTION BOX WIRING DETAIL
FOR GROUNDING REQUIREMENTS, SEE **STANDARD PLAN J-60.05**

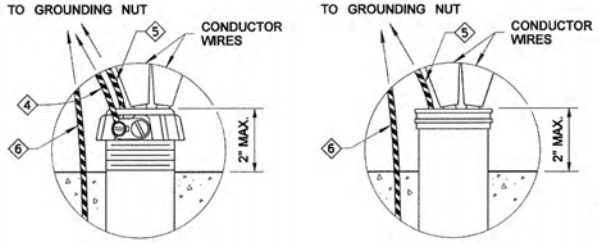

DETAIL "C"
GRS CONDUIT

DETAIL "D"
PVC CONDUIT

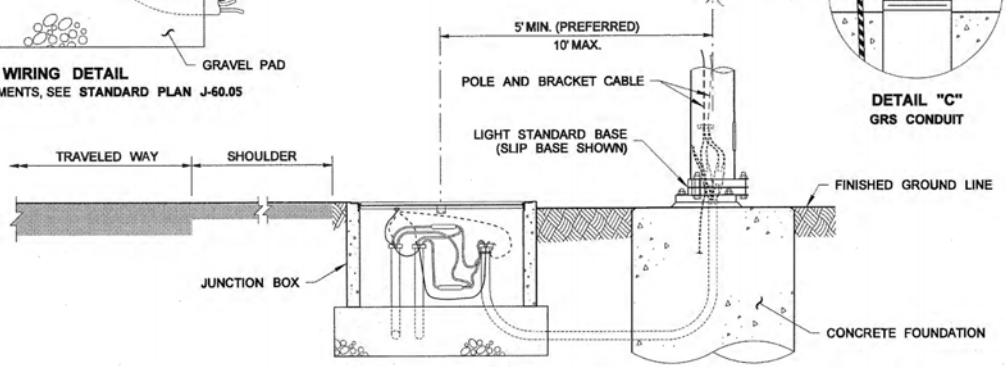

TYPICAL LOCATION OF JUNCTION BOX AND FOUNDATION

NOTE

See **Standard Specification 8-20.**

JOHN C. NISBET
STATE OF WASHINGTON
29115
REGISTERED
PROFESSIONAL ENGINEER
5/11/11

STEEL LIGHT STANDARD WIRING DETAILS

STANDARD PLAN J-28.70-01

SHEET 1 OF 1 SHEET

APPROVED FOR PUBLICATION

STATE DESIGN ENGINEER — DATE 5/11/11

Washington State Department of Transportation

DRAWN BY: LISA CYFORD

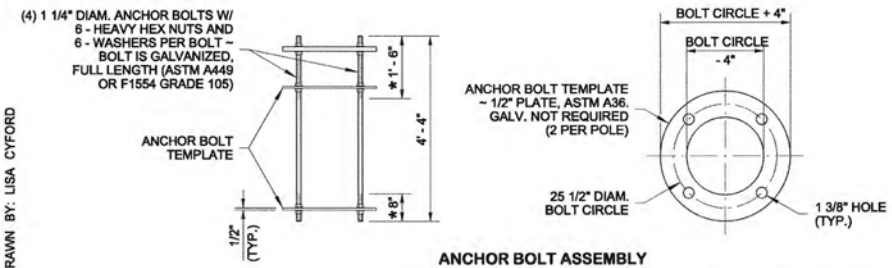

ANCHOR BOLT ASSEMBLY

* THREADED LENGTH

CAMERA POLE HEIGHT	DEPTH OF FOUNDATION "D"		ANCHOR BOLT ASTM A449 OR F1554 GR 105		
FOR LOAD CASES #1 and #2	3H : 1V OR FLATTER	2H : 1V	DIAMETER	LENGTH	BOLT CIRCLE
20' - 30'	4' - 6"	6' - 6"	1 1/4"	4' - 4"	25 1/2"
40'	5' - 6"	7' - 6"	1 1/4"	4' - 4"	25 1/2"
50'	7' - 0"	9' - 0"	1 1/4"	4' - 4"	25 1/2"

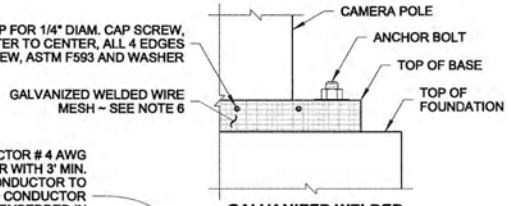

GALVANIZED WELDED WIRE MESH

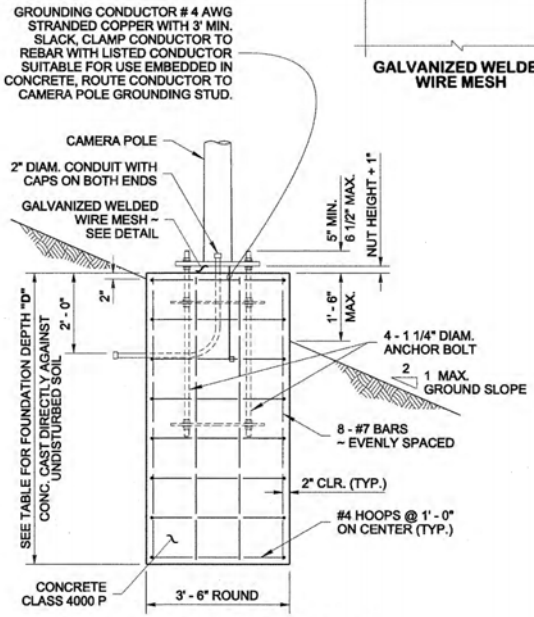

FOUNDATION REINFORCEMENT DETAIL

(CONCRETE CAST DIRECTLY AGAINST UNDISTURBED EARTH)

ALTERNATE # 1

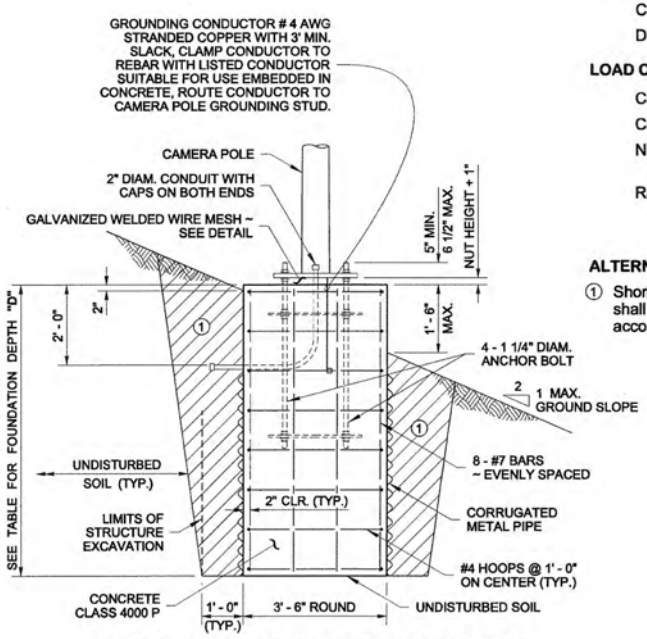

FOUNDATION REINFORCEMENT AND BACKFILL DETAIL

(CONCRETE CAST INSIDE CORRUGATED METAL PIPE STAY-IN-PLACE FORM)

ALTERNATE # 2

NOTES

1. These Foundations are designed for a minimum of 1,500 PSF allowable lateral bearing pressure for the soil. A Special Foundation shall be required for soil with allowable lateral bearing pressure lower than 1,500 PSF.
2. These Foundations are designed for installation on level ground, or on sloping ground, not to exceed 2 : 1 slopes. Slopes steeper than 2 : 1 require a special design.
3. Foundations constructed within ecology embankments shall be increased in depth, by the depth of the ecology embankment.
4. Foundations not within the parameters of this standard require Special Design. Contact the WSDOT Bridge and Structures Office through the Engineer for Special Foundation Designs.
5. The top 2' - 0" of the foundation shall use a smooth form (such as paper or cardboard). After the concrete has cured, this entire form shall be removed.
6. Galvanized Welded Wire Mesh shall be 2 mesh per lineal inch, 0.0625" diam. wire, with 0.4375" overlap. Contractor to form fit and install.

DESIGN CRITERIA:

This structure has been designed according to the Fifth Edition **2009 AASHTO Standard Specifications for Structural Supports for Highway Signs, Luminaires, and Traffic Signals.** Basic wind velocity is 90 MPH. Design Life/Recurrence Interval 50 years and Fatigue Category III.

WIND VELOCITY:

90 MPH
Maximum Pole Deflection shall not exceed 0.7" in 30 MPH and 1.4" in 70 MPH wind.

LOAD CASE # 1

Camera (1) - EPA = 4.00 sq. ft. @ 2' - 0" above pole top, and:

Dish (1) - 1' - 0" diameter @ pole top level.

LOAD CASE # 2

Camera (1) - EPA = 4.00 sq. ft. @ 2' - 0" above pole top, and:

Camera (2) - EPA = 0.54 sq. ft. each @ 1' - 0" and 2' - 0" from pole top, and:

NEMA Cabinet (2) - EPA = 1.33 sq. ft. each @ 3' - 8" from pole top, install both NEMA cabinets back to back, and:

Radio Equipment (2) - EPA = 2.25 sq ft. each @ 2' - 0" and 9' - 0" from pole top.

EPA = Effective Projected Area

ALTERNATE #2 - CONSTRUCTION METHOD

① Shoring or Extra Excavation as Required. Excavated area shall be backfilled with Controlled-Density Fill or with soil in accordance with **Standard Specification 8-20.3(2).**

CAMERA POLE FOUNDATION DETAILS

STANDARD PLAN J-29.10-00

SHEET 1 OF 1 SHEET

APPROVED FOR PUBLICATION

STATE DESIGN ENGINEER — DATE

Washington State Department of Transportation

DRAWN BY: LISA CYFORD

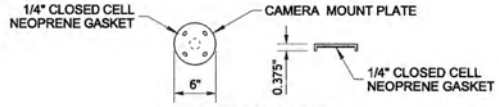

RAIN CAP DETAIL

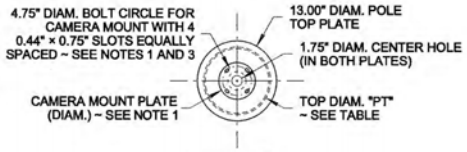

VIEW (A)

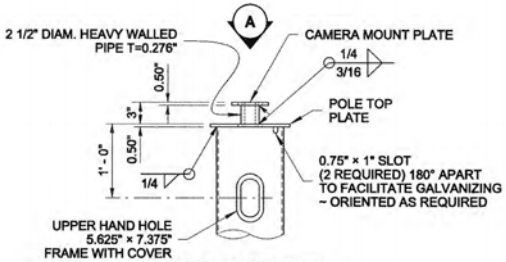

POLE TOP DETAIL

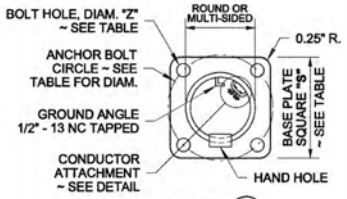

VIEW (B)

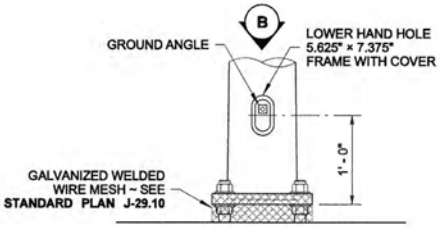

POLE BASE DETAIL

CAMERA POLE
CAMERA POLE FOR LOADING LOAD CASE #1
(TOP MOUNT CAMERA AND 1' - 0" DIAM. DISH)

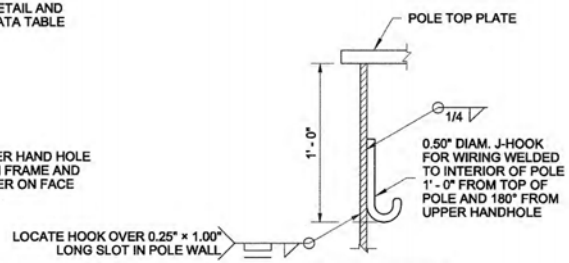

J-HOOK FOR WIRING
LOAD CASE #1

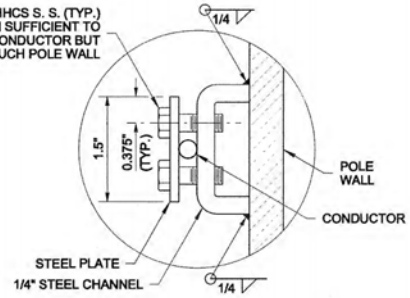

CONDUCTOR ATTACHMENT DETAIL

CONDUCTOR ATTACHMENT DETAILS MAY VARY PER MANUFACTURER

CAMERA POLE DATA

CAMERA HEIGHT "PL" (FT.)	POLE MOUNT TYPE	TOP DIAM. "PT" (IN.) (MIN.)	POLE TUBE			ANCHOR BOLT DIAM. (IN.)	CONNECTION BOLT DIAM. (IN.)
			SQUARE "S" (IN.)	BOLT CIRCLE (IN.)	HOLE "Z" (IN.)		
15	ELBOW	8.50	25.00	25.50	1.50	–	1.25
20	ELBOW	8.50	25.00	25.50	1.50	–	1.25
30	ELBOW	9.00	25.00	25.50	1.50	–	1.25
20 - 30	GROUND	9.00	25.00	25.50	1.50	1.25	–
40	ELBOW	9.00	25.00	25.50	1.50	–	1.25
40	GROUND	9.00	25.00	25.50	1.50	1.25	–
50	ELBOW	10.00	25.00	25.50	1.50	–	1.25
50	GROUND	10.00	25.00	25.50	1.50	1.25	–

NOTES

1. Verify Pole Top Plate, Camera Mount Plate, Bolt Circle, and Bolt Holes are adequate for the required Camera prior to releasing poles for manufacturing.
2. Steel shall be galvanized after fabrication per AASHTO M111. Hardware shall be galvanized per AASHTO M232. Fasteners less than 0.50" (in.) diameter shall be stainless or brass.
3. Attach Camera to Camera Mount Plate using four (4) 3/8"-16 UNC × 1.75" stainless steel bolts with eight (8) stainless steel washers and four (4) lock-nuts with nylon inserts, or as approved by the Camera Supplier.
4. For Ground Mount Details, see **Standard Plan J-29.10.** For Elbow Mount Details, see **Standard Plan J-29.16.**

DESIGN CRITERIA:

This structure has been designed according to the Fifth Edition **2009 AASHTO Standard Specifications for Structural Supports for Highway Signs, Luminaires, and Traffic Signals.** Basic wind velocity is 90 MPH. Design Life/Recurrence Interval 50 years.

WIND VELOCITY:

90 MPH

Maximum Pole Deflection shall not exceed 0.7" in 30 MPH and 1.4" in 70 MPH wind.

LOAD CASE #1:

Camera (1) - EPA = 4.00 sq. ft. @ 2' - 0" above pole top, and:

Dish (1) - 1' - 0" diameter @ pole top level.

LOAD CASE #2:

Camera (1) - EPA = 4.00 sq. ft. @ 2' - 0" above pole top, and:

Camera (2) - EPA = 0.54 sq. ft. @ 1' - 0" and 2' - 0" from pole top, and:

NEMA Cabinet (2) - EPA = 1.33 sq. ft. @ 3' - 8" from pole top, install back-to-back NEMA Cabinets, and:

Radio Equipment (2) - EPA = 2.25 sq. ft. each @ 2' - 0" and 9' - 0" from pole top.

EPA = Effective Projected Area

CAMERA POLE STANDARD

STANDARD PLAN J-29.15-00

SHEET 1 OF 2 SHEETS

APPROVED FOR PUBLICATION

STATE DESIGN ENGINEER — DATE

Washington State Department of Transportation

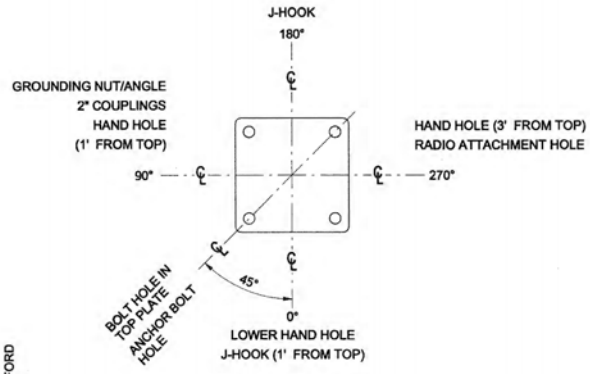

RADIAL INDEX LOAD CASE #2

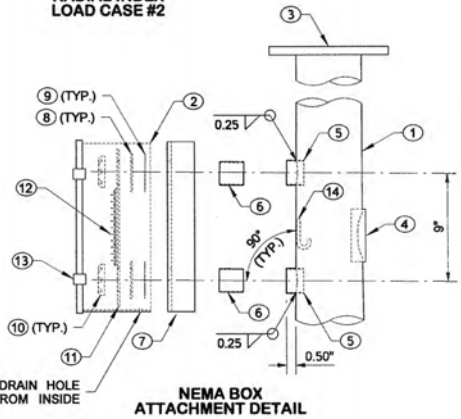

NEMA BOX ATTACHMENT DETAIL

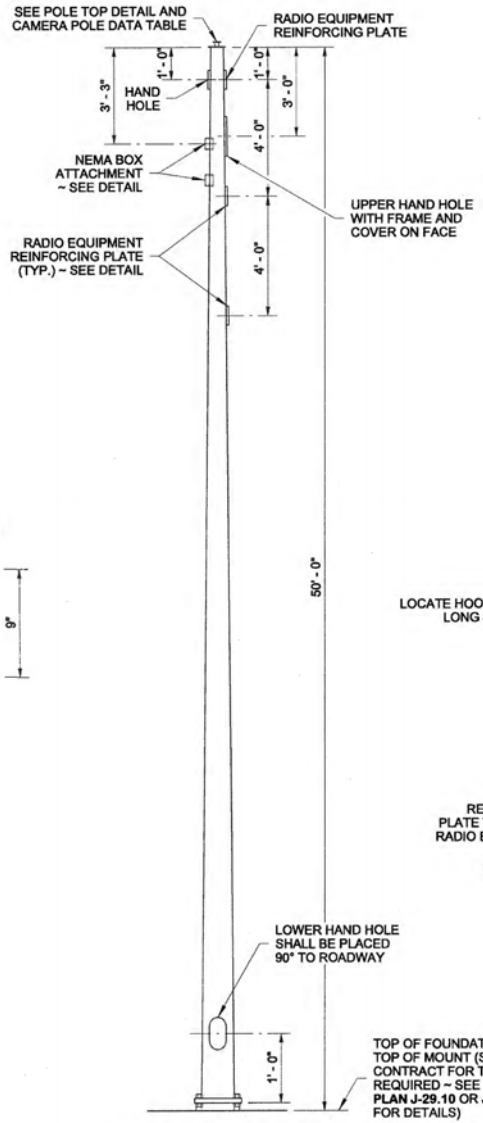

CAMERA POLE FOR LOADING LOAD CASE #2

(TOP MOUNT CAMERA, 2 SIDEMOUNT CAMERAS, 2 NEMA CABINETS & 2 RADIO EQUIPMENTS)

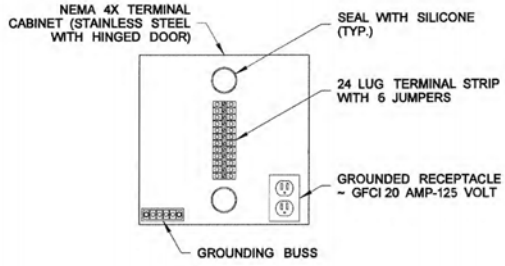

NEMA BOX DETAIL

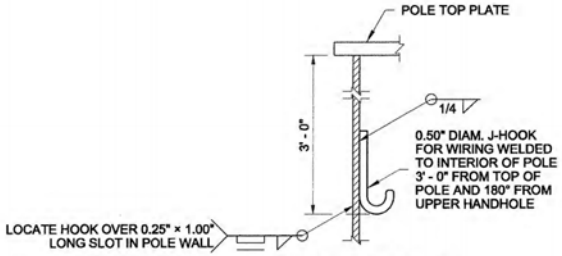

J-HOOK FOR WIRING LOAD CASE #2

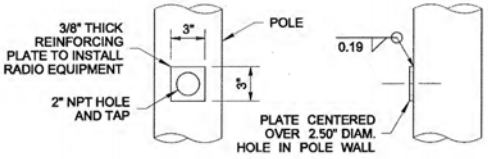

RADIO EQUIPMENT REINFORCING PLATE

DRAWN BY: LISA CYFORD

KEY

1. CAMERA/TDA POLE MOUNTS
2. NEMA 4X (STAINLESS STEEL) ~ SIZE 16" H × 12" W × 6" D
3. CAMERA MOUNT PLATE
4. CAMERA UPPER HANDHOLE
5. 2" COUPLING
6. 2" SHORT NIPPLE
7. CHANNEL DRILLED 1/8" OVERSIZE OF NIPPLE
8. STEEL WASHER
9. CONDUIT WATERTIGHT LOCKNUT
10. END BUSHING
11. BACK PLATE ~ DRILL OVER SIZE FOR CONDUIT, SEAL WASHER, AND LOCKNUT
12. TERMINAL BLOCK
13. HINGED DOOR WITH TWO PAD-LOCKABLE FLIP LATCHES (TYP.)
14. J-HOOK FOR WIRING

CAMERA POLE STANDARD

STANDARD PLAN J-29.15-00

SHEET 2 OF 2 SHEETS

APPROVED FOR PUBLICATION

STATE DESIGN ENGINEER — DATE 6/22/11

Washington State Department of Transportation

DRAWN BY: BILL BERENS

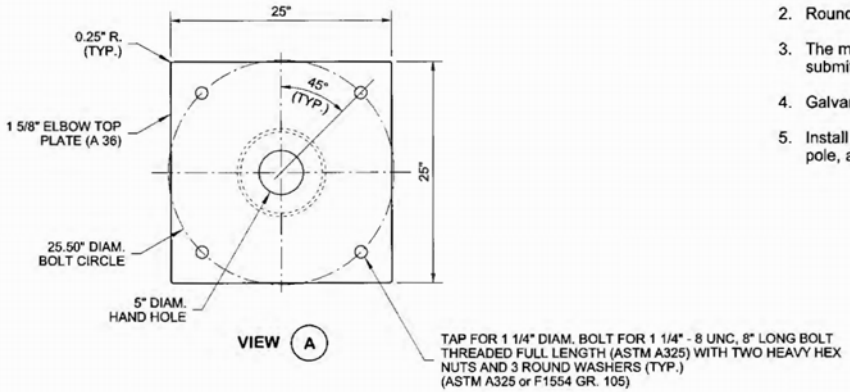

NOTES

1. For information not shown, see Steel Light Standard Elbow detail, **Standard Plan J-28.45.** For Camera Pole Details, see **Standard Plan J-29.15.**
2. Round and smooth all edges along wire-way to protect conductors.
3. The manufacturer shall verify that the Elbow Top Plate matches the Camera Pole Base, and shall submit the shop drawings for approval.
4. Galvanize after fabrication according to AASHTO M111.
5. Install galvanized steel protective band (3/16" thick × 3 1/2" high (A36)) on all four sides after truing pole, as shown in **Standard Plan J-28.45,** except fasten 6" from corners on 25" square base.

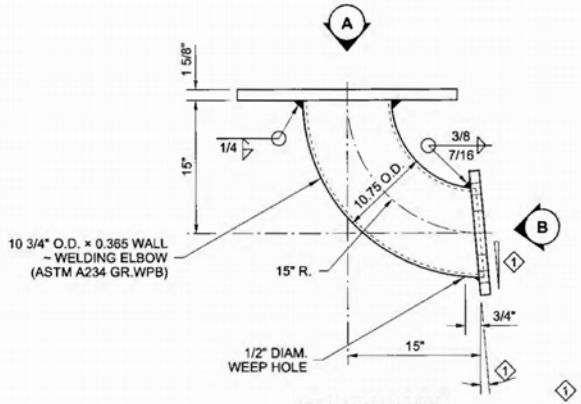

1 SEE CONTRACT PLANS FOR SLOPE OF PARAPET FACE

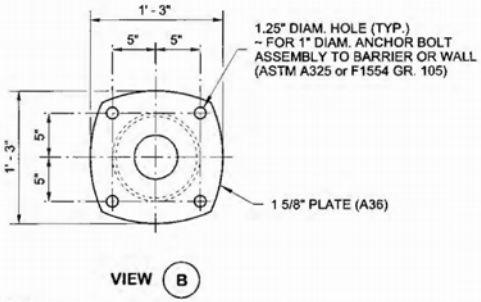

CAMERA POLE ELBOW MOUNT ~ 25" SQUARE

RICHARD P. ZELDES
STATE OF WASHINGTON
25470
STRUCTURAL ENGINEER
PROFESSIONAL ENGINEER
6/12/13

CAMERA POLE STANDARD DETAILS

STANDARD PLAN J-29.16-01

SHEET 1 OF 1 SHEET

APPROVED FOR PUBLICATION

STATE DESIGN ENGINEER — DATE 6/20/13

Washington State Department of Transportation

DRAWN BY: FERN LIDDELL

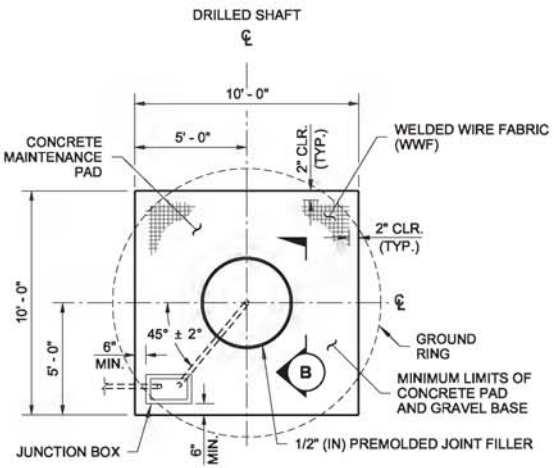

PLAN VIEW

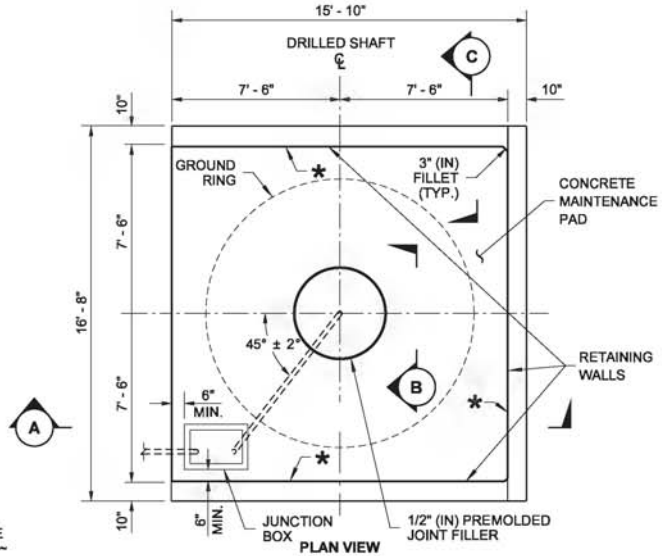

PLAN VIEW

(REINFORCING NOT SHOWN FOR CLARITY)

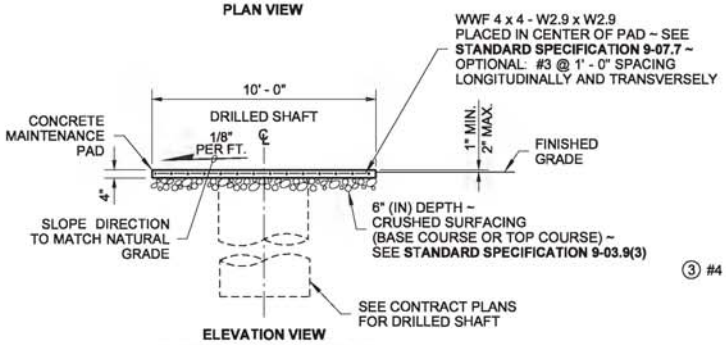

ELEVATION VIEW

4" (IN) MAINTENANCE PAD

ON SLOPES LEVEL TO 10H : 1V

NOTE: CONCRETE FOR 4" (IN) THICK PAD SHALL BE CLASS 3000

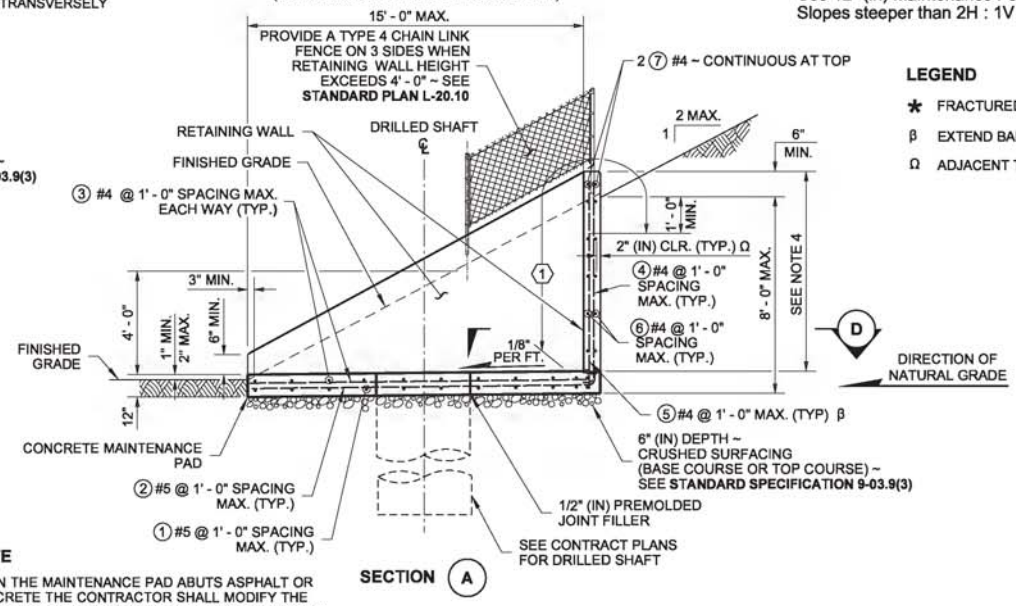

SECTION (A)

12" (IN) MAINTENANCE PAD

ON SLOPES STEEPER THAN 10H : 1V

NOTE: CONCRETE FOR 12" (IN) THICK PAD SHALL BE CLASS 4000
(GROUND RING NOT SHOWN FOR CLARITY)

NOTES

1. All material and workmanship shall be in accordance with the **Standard Specifications**.
2. The maintenance pad and retaining walls have been designed to meet the requirements of the **AASHTO LRFD Bridge Design Specifications, 7th Edition, 2014**.
3. Concrete for 12" (in) thick maintenance pad shall be class 4000. Concrete for 4" (in) thick maintenance pad shall be class 3000.
4. Height of wall varies to match slope of finished grade. Contractor shall field-determine wall height at each maintenance pad location and obtain approval from the Engineer prior to proceeding with construction.
5. All exposed corners shall have 3/4" (in) chamfers.
6. For grounding details not shown, see **Standard Plan J-60.05**.
7. Where concrete cover (clear) thickness is not shown, the clear distance from the face of the concrete to the face of any reinforcing steel shall be as follows: 3" (in) for bottom of maintenance pad, 2" (in) for top of maintenance pad, and 1 1/2" (in) at all other locations.
8. Falsework shall be carefully released to prevent impact or undue stress on the structure.
9. See Contract Plans for number, type, and location of conduits and conductors.
10. Contractor shall orient the maintenance pad to align with the direction of natural grade as shown. Engineer's approval of maintenance pad slope and orientation required prior to proceeding with construction.
11. Use 4" (in) Maintenance Pad on level ground or slopes not exceeding 10H : 1V. Use 12" (in) Maintenance Pad on slopes steeper than 10H : 1V. Slopes steeper than 2H : 1V shall require a special design.

LEGEND

* FRACTURED FIN FINISH
β EXTEND BAR 8" (IN) INTO FOOTING
Ω ADJACENT TO SOIL

KEY NOTE

① LIMITS OF PIGMENTED SEALER. TYPICAL FOR ALL RETAINING WALLS.

REINFORCING STEEL BENDING DIAGRAM

SEE **STD. SPEC. 9-07.1(2)** FOR BENDING DIAM. ALL DIMENSIONS ARE OUT TO OUT

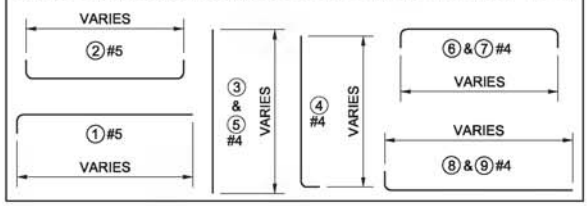

NOTE

WHEN THE MAINTENANCE PAD ABUTS ASPHALT OR CONCRETE THE CONTRACTOR SHALL MODIFY THE FINISHED GRADE 1" (IN) MINIMUM TO 2" (IN) MAXIMUM.

RICHARD P. ZELDENRUST
STATE OF WASHINGTON
25470
STRUCTURAL ENGINEER
PROFESSIONAL ENGINEER

Zeldenrust, Richard
2015.06.11 15:07:03 -07'00'

HIGH MAST LUMINAIRE MAINTENANCE PAD

STANDARD PLAN J-30.10-00

SHEET 1 OF 2 SHEETS

APPROVED FOR PUBLICATION
Carpenter, Jeff
Jun 18 2015 7:54 AM
STATE DESIGN ENGINEER
Washington State Department of Transportation

DRAWN BY: FERN LIDDELL

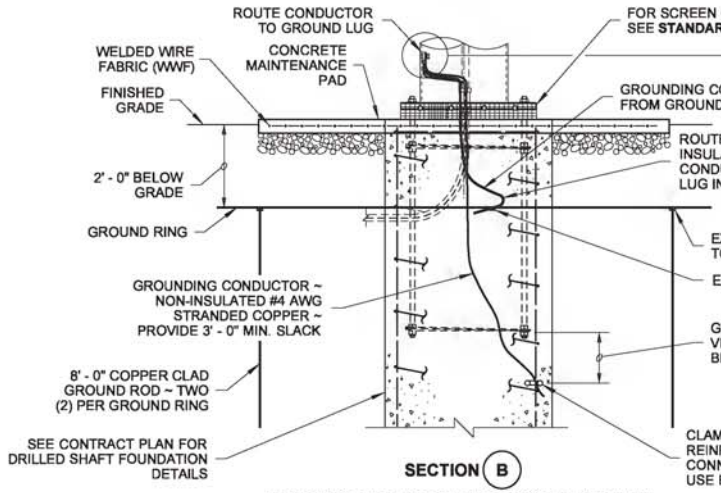

SECTION (B)

4" (IN) THICK MAINTENANCE PAD IS SHOWN IN THIS VIEW ~
12" (IN) THICK MAINTENANCE PAD DETAIL IS SIMILAR
(REINFORCING, ANCHOR BOLTS, AND GUIDEPOSTS NOT SHOWN IN THIS VIEW FOR CLARITY)

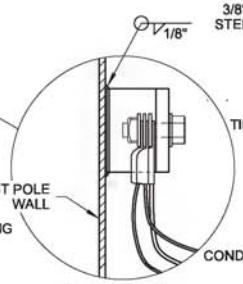

INTERIOR VIEW

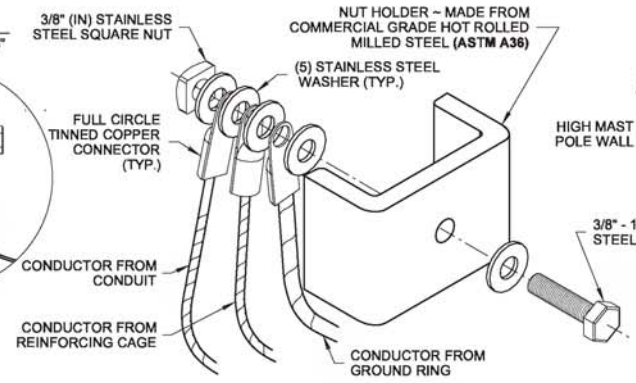

EXPLODED VIEW

GROUNDING LUG DETAIL

BOLTS, NUTS, AND WASHERS ~ **ASTM F593** OR **A193 TYPE 304** OR **TYPE 316** STAINLESS STEEL (S.S.)

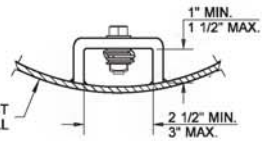

PLAN VIEW

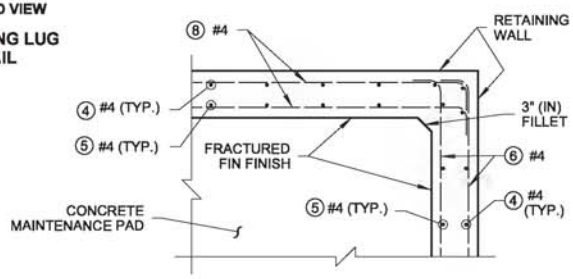

SECTION (D)

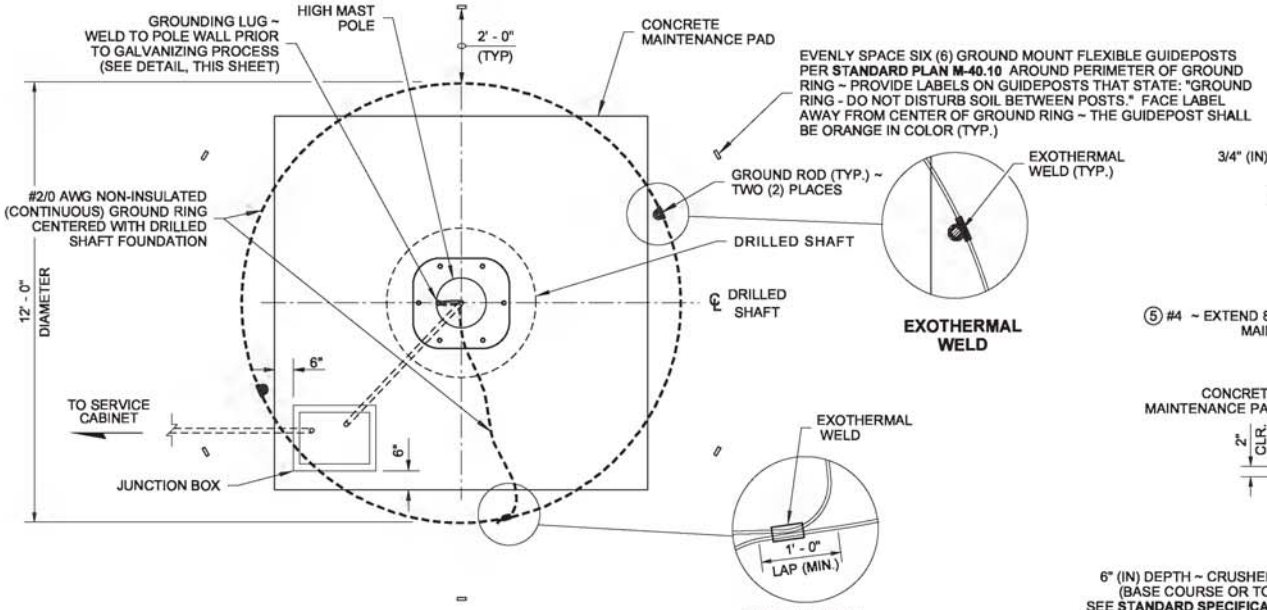

EXOTHERMAL WELD

EXOTHERMAL WELD

PLAN VIEW

HIGH MAST POLE MAINTENANCE PAD AND GROUNDING DETAILS

4" (IN) THICK MAINTENANCE PAD IS SHOWN IN THIS VIEW ~
12" (IN) THICK MAINTENANCE PAD DETAIL IS SIMILAR
(REINFORCING NOT SHOWN FOR CLARITY)

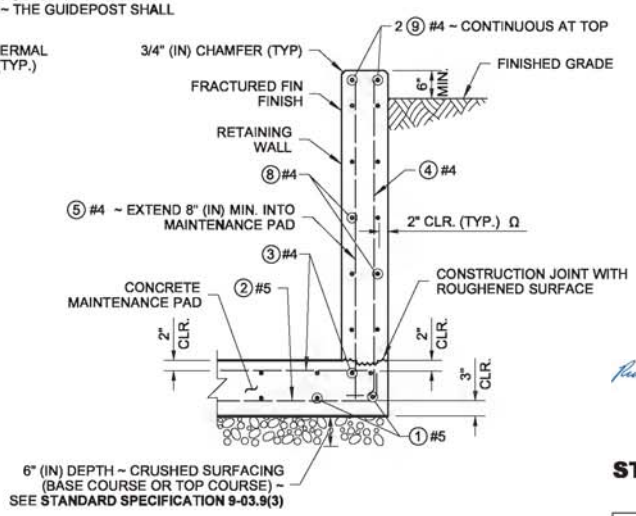

SECTION (C)

(CHAIN LINK FENCE NOT SHOWN FOR CLARITY)

RICHARD P. ZELDENRUST
STATE OF WASHINGTON
25470
STRUCTURAL ENGINEER
PROFESSIONAL ENGINEER

Zeldenrust, Richard
2015.06.11 15:07:28 -07'00'

HIGH MAST LUMINAIRE MAINTENANCE PAD

STANDARD PLAN J-30.10-00

SHEET 2 OF 2 SHEETS

APPROVED FOR PUBLICATION
Carpenter, Jeff
Jun 18 2015 7:54 AM
STATE DESIGN ENGINEER
Washington State Department of Transportation

DRAWN BY: LISA CYFORD

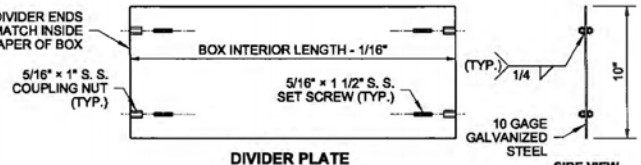

DIVIDER PLATE
ELEVATION VIEW
(FOR TYPE 2 JUNCTION BOX ONLY)

MARK	ITEM	BOX TYPE	
		TYPE 1	TYPE 2
A	OUTSIDE LENGTH OF JUNCTION BOX	22"	33"
B	OUTSIDE WIDTH OF JUNCTION BOX	17"	22 1/2"
C	INSIDE LENGTH OF JUNCTION BOX	18" ~ 19"	28" ~ 29"
D	INSIDE WIDTH OF JUNCTION BOX	13" ~ 14"	17" ~ 18"
E	LID LENGTH	17 5/8"	28 5/8"
F	LID WIDTH	12 5/8"	18 1/8"
	CAPACITY ~ CONDUIT DIAMETER	6"	12"

JUNCTION BOX DIMENSION TABLE

NOTES

1. All box dimensions are approximate. Exact configurations vary among manufacturers.
2. Minimum lid thickness shown. The diamond pattern shall be a minimum of 28% of the overall thickness. Junction Boxes installed in sidewalks, walkways, and shared-use paths shall have a slip-resistant coating on the lid and lip cover plate, and shall be installed with the surface flush with and matched to the grade of the sidewalk, walkway, or shared-use path. The non-slip lid shall be identified with permanent markings on the underside, indicating the type of surface treatment (see Contract Documents for details) and the year of manufacture. The permanent marking shall be 1/8" inch line thickness formed with a stainless steel weld bead and shall be placed prior to hot-dip galvanizing.
3. Lid support members shall be 3/16" minimum thick steel C, L, or T shape, welded to the frame.
4. A 1/4-20 NC × 3/4" stainless steel ground stud shall be welded to the bottom of the lid; include (2) stainless steel nuts and (2) stainless steel flat washers.
5. Bolts and nuts shall be liberally coated with anti-seize compound.
6. Equipment Bonding Jumper shall be # 8 AWG min. × 4' of tinned braided copper.
7. The System Identification letters shall be 1/8" line thickness formed by engraving, stamping, or with a S. S. weld bead. See Cover Marking detail. Grind off diamond pattern before forming letters. For System Identification details, see **Standard Specification 9-29.2(4).**
8. When required in the Contract, provide a 10" x 27 1/2", 10 gage divider plate, complete, with fasteners, in each Type 2 Junction Box where specified.
9. When required in Contract, provide a 12" deep extension for each Type 2 Junction Box where specified.
10. See the Standard Specifications for alternative reinforcement and class of concrete.
11. Headed Anchor Shear Studs must be welded to the Steel Cover Lip Plate and wire tied in two places to the vertical Welded Reinforcement Wire when in contact with each other. Wire tie all other Headed Anchor Shear Studs to the horizontal Welded Reinforcement Wire.
12. Lid Bolt Down Attachment Tab provides a method of retrofitting by using a mechanical process in lieu of welding. Attachment Tab shown depicts a typical component arrangement; actual configurations of assembly will vary among manufacturers. See approved manufacturers' shop drawings for specifics.
13. Unless otherwise noted in the plans or approved by the Engineer, Junction Boxes, Cable Vaults, and Pull Boxes shall not be placed within the sidewalks, walkways, shared use paths, traveled ways or paved shoulders. All Junction Boxes, Cable Vaults, and Pull Boxes placed within the traveled way or paved shoulders shall be Heavy-Duty.
14. Distance between the top of the conduit and the bottom of the Junction Box lid shall be 6" min. to 8" max. for final grade of new construction only. See **Standard Specification 8-20.3(5).** Where adjustments are to be made to existing Junction Boxes, or for interim construction stages during the contract, the limits shall be from 6" min. to 10" max. See **Standard Specification 8-20.3(6).**

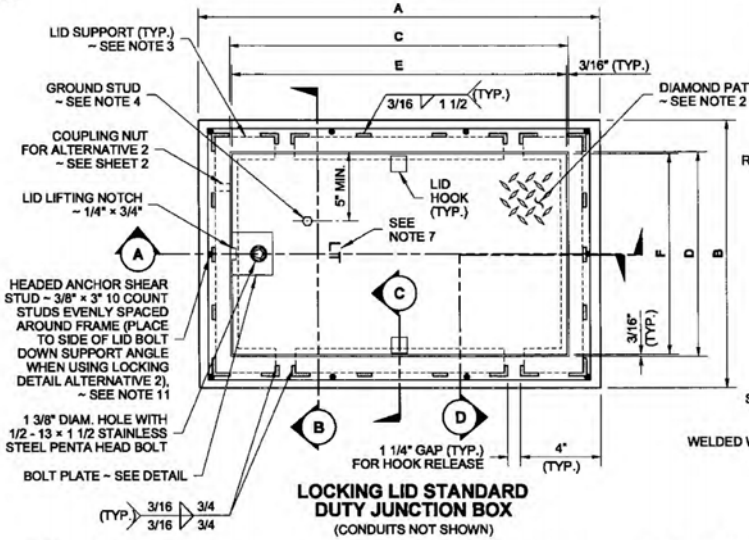

LOCKING LID STANDARD DUTY JUNCTION BOX
(CONDUITS NOT SHOWN)

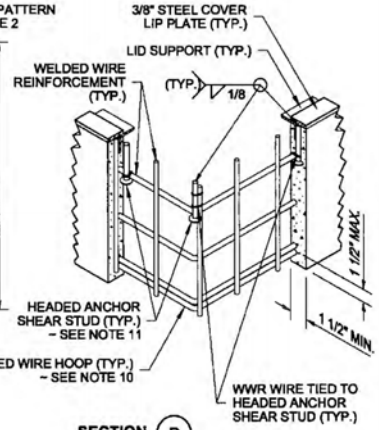

SECTION D
PERSPECTIVE VIEW

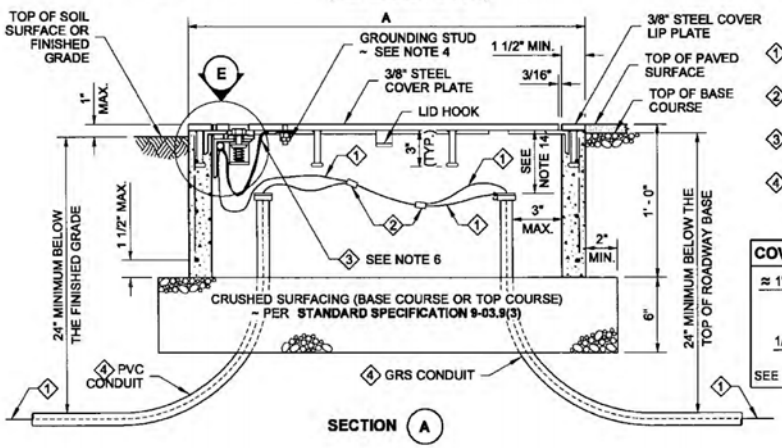

SECTION A

1. Equipment Grounding Conductor
2. Copper Solderless Crimp Connector
3. Equipment Bonding Jumper ~ see note 6
4. See Contract for conduit size and number

COVER MARKING DETAIL

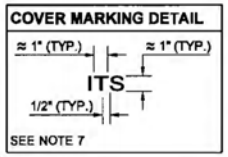

SEE NOTE 7

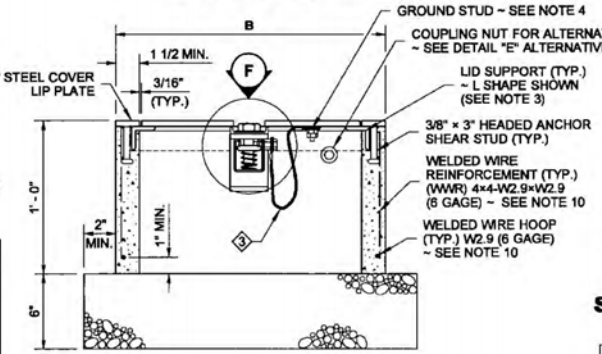

SECTION B
(CONDUITS NOT SHOWN)

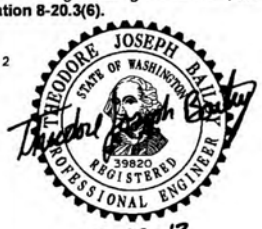

5-15-13

LOCKING LID STANDARD DUTY JUNCTION BOX TYPES 1 & 2
STANDARD PLAN J-40.10-03

SHEET 1 OF 2 SHEETS

APPROVED FOR PUBLICATION
STATE DESIGN ENGINEER — DATE 5/20/13
Washington State Department of Transportation

DRAWN BY: LISA CYFORD

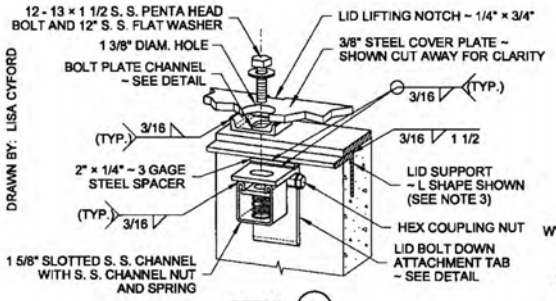

DETAIL (F)

ALTERNATIVE 1 SHOWN PERSPECTIVE VIEW

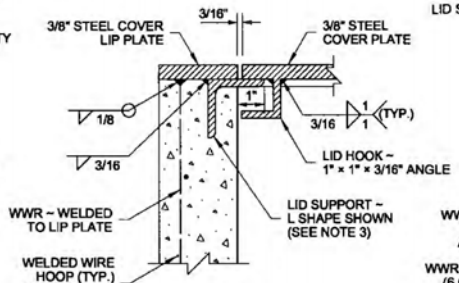

SECTION (C)

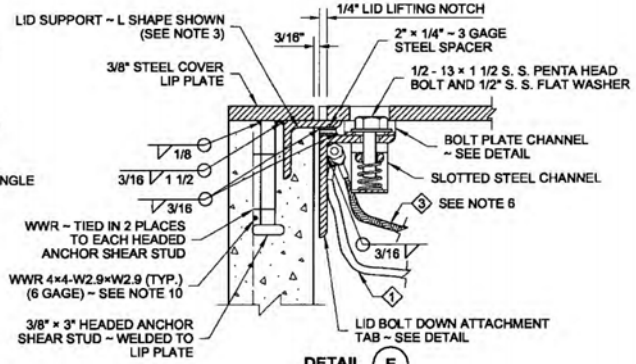

DETAIL (E)

ALTERNATIVE 1 SHOWN

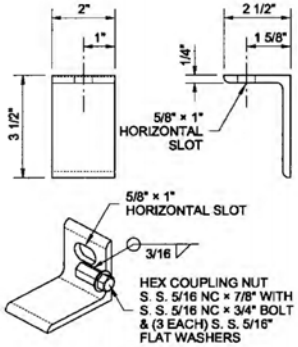

ALTERNATIVE 1
LID BOLT DOWN ATTACHMENT TAB
(SEE NOTE 12)

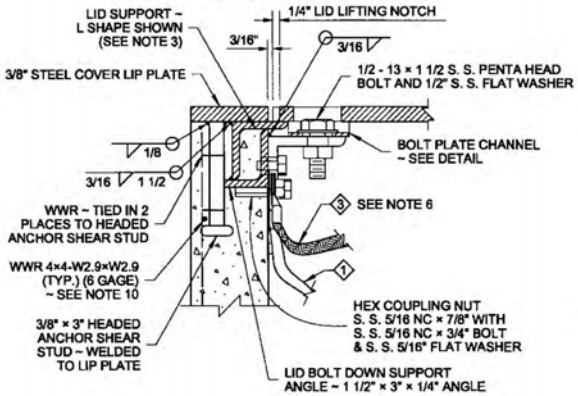

DETAIL (E)

ALTERNATIVE 2 SHOWN

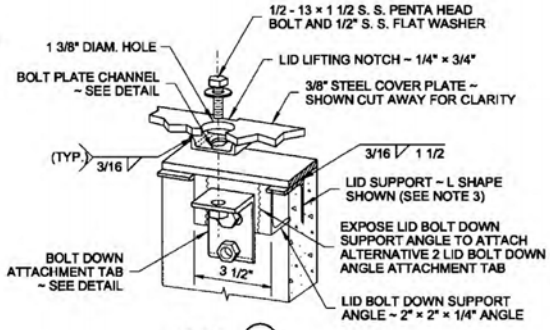

DETAIL (F)

ALTERNATIVE 2 SHOWN PERSPECTIVE VIEW

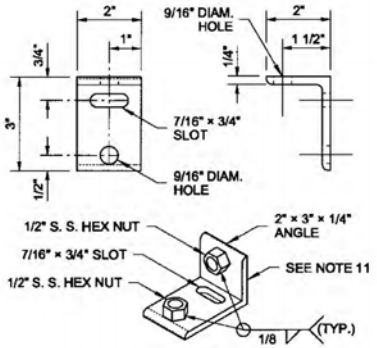

ALTERNATIVE 2
LID BOLT DOWN ATTACHMENT TAB
(SEE NOTE 12)

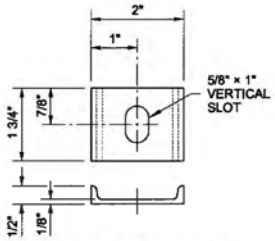

BOLT PLATE CHANNEL

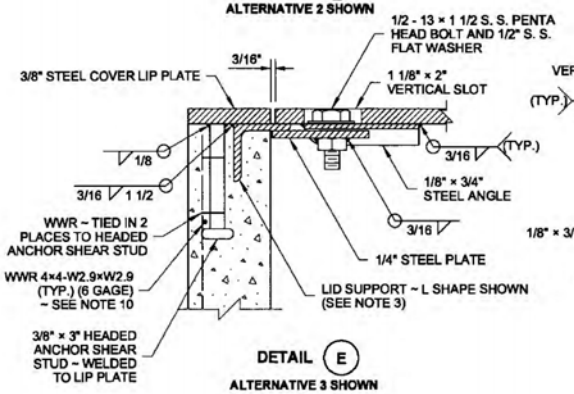

DETAIL (E)

ALTERNATIVE 3 SHOWN

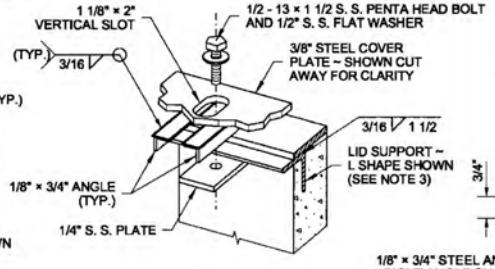

DETAIL (F)

ALTERNATIVE 3 SHOWN PERSPECTIVE VIEW

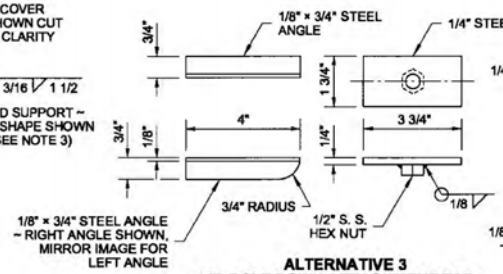

ALTERNATIVE 3
LID BOLT DOWN ATTACHMENT TAB
(SEE NOTE 12)

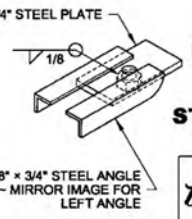

5-15-13

LOCKING LID STANDARD DUTY JUNCTION BOX TYPES 1 & 2

STANDARD PLAN J-40.10-03

SHEET 2 OF 2 SHEETS

APPROVED FOR PUBLICATION

STATE DESIGN ENGINEER — DATE 6/20/13

Washington State Department of Transportation

DRAWN BY: LISA CYFORD

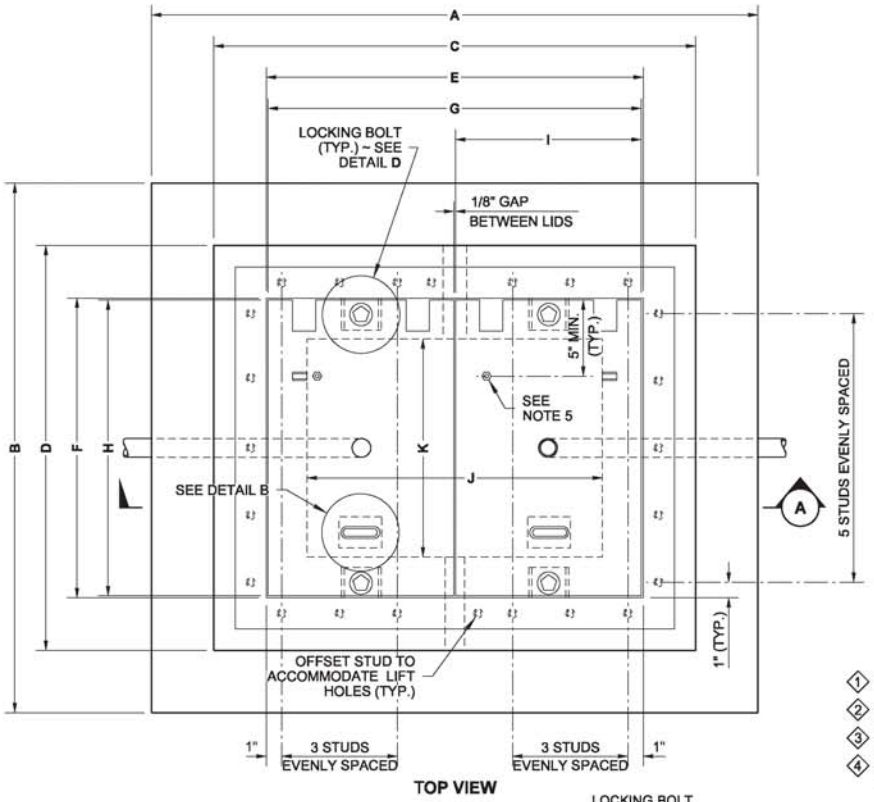

TOP VIEW

JUNCTION BOX DIMENSION TABLE				
MARK	ITEM	BOX TYPE		
		TYPE 4	TYPE 5	TYPE 6
A	OVERALL LENGTH	39"	48 7/16"	56"
B	OVERALL WIDTH	34"	37 7/16"	44"
C	JUNCTION BOX LENGTH	31"	40 7/16"	48"
D	JUNCTION BOX WIDTH	26"	29 7/16"	36"
E	LID OPENING LENGTH	24"	33 1/4"	41 1/8"
F	LID OPENING WIDTH	19"	22 1/4"	29 1/4"
G	TYPE 4 LID LENGTH	24"	——	——
H	TYPE 4, 5 & 6 LID WIDTH	19"	22"	29"
I	TYPE 5 & 6 LID LENGTH	——	16 7/16"	20 3/8"
J	INSIDE BOX LENGTH	19"	28 7/16"	36"
K	INSIDE BOX WIDTH	14"	17 7/16"	24"
X	STIFFENER SPACING	VARIES	VARIES	VARIES
Y	STIFFENER SPACING	VARIES	VARIES	VARIES
Z	STIFFENER LENGTH	18 1/4"	20 1/4"	28 1/8"
CAPACITY ~ CONDUIT DIAM.		6"	12"	24"

1. Equipment Grounding Conductor
2. Copper Solderless Crimp Connector
3. Equipment Bonding Jumper ~ see note 8
4. See Contract Plans and Special Provisions for conduit size and number

NOTES

1. All box dimensions are approximate. Exact configurations vary among manufacturers.
2. All lid thicknesses are minimum. The diamond pattern shall be 3/32" minimum thickness.
3. Lid perimeter shall bear on frame. Mill to bearing seat and lid perimeter for full even contact after fabrication of frame and lid. Lid and frame units with uneven bearing will be rejected.
4. The installed lid and frame shall fit with full even contact around the perimeter of a junction box after installation. Care shall be taken to prevent debris accumulation on the contact surfaces.
5. A 1/4-20 NC × 1" S. S. ground stud shall be welded to the bottom of each lid: include (2) each S. S. nuts and (3) each S. S. flat washers.
6. The hinges shall allow the lids to open 180°.
7. Bolts and nuts shall be liberally coated with anti-seize compound.
8. Connect Equipment Bonding Jumper to ground stud on lid. As an alternative to ground stud connection, the Equipment Bonding Jumper shall be attached to the front face of the hinge pocket with a 5/16-20 NC × 1" S. S. bolt, (2) each S. S. nuts, and (3) each S. S. flat washers. Equipment bonding jumper shall be #8 AWG min. × 4' of tinned braided copper.
9. The System Identification letters shall be 1/8" line thickness formed by a S. S. weld bead. See Cover Marking details. Grind off diamond pattern before forming letters. Ductile iron lid lettering shall be recessed , 1/8" line thickness. See **Standard Specification 9-29.2(4)** for details.
10. See **Standard Specification 9-29.2(1)B** for class of concrete.
11. Unless otherwise noted in the plans or approved by the Engineer, Junction Boxes, Cable Vaults, and Pull Boxes shall not be placed within the traveled way or paved shoulders. All Junction Boxes, Cable Vaults, and Pull Boxes placed within the traveled way or paved shoulders shall be Heavy-Duty. Heavy-Duty Junction Boxes shall not be installed in sidewalks, walkways, and shared use paths.
12. Distance between the top of the conduit and the bottom of the Junction Box lid shall be 6" min. to 8" max., for final grade of new construction only. See **Standard Specification 8-20.3(5).** Where adjustments are to be made to existing Junction Boxes, or for interim construction stages during the contract, the limits shall be from 6" min. to 10" max. See **Standard Specification 8-20.3(6).**
13. Junction Box Types 4, 5, or 6 may be equipped with Ductile Iron (Alternative) Lid(s) and a Cast Iron (Alternative) Frame. Junction box shall meet the requirements of **Std. Spec. 9-29.2** and shall be in accordance with approved shop drawings.

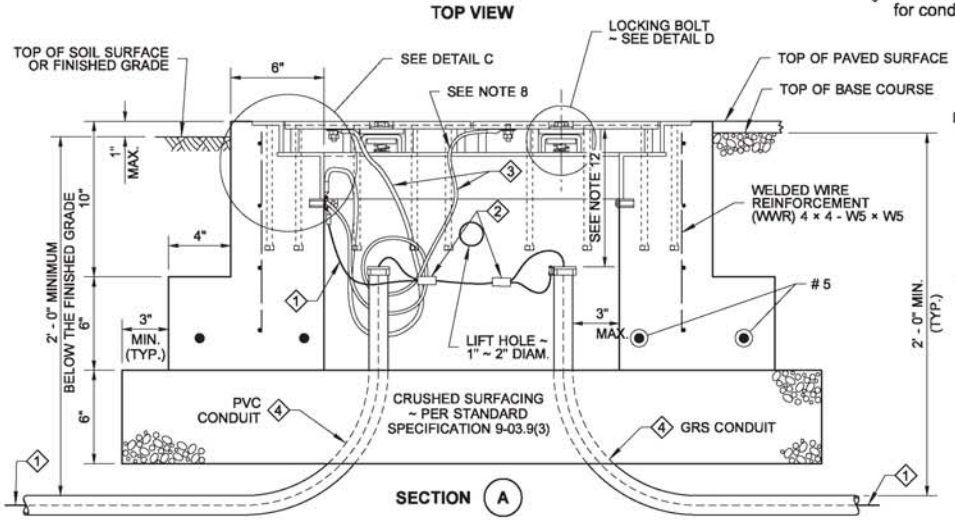

SECTION A

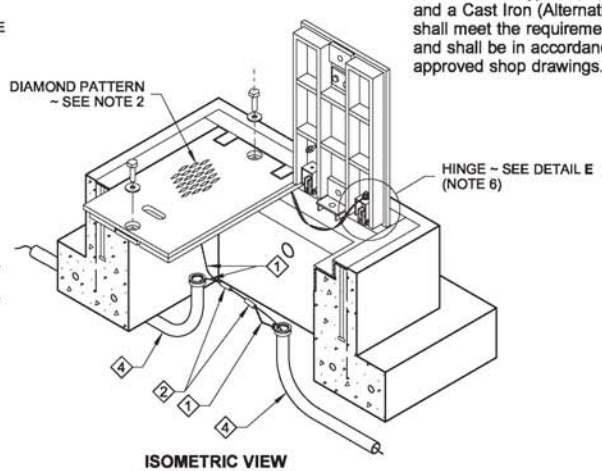

ISOMETRIC VIEW
TYPE 5 AND 6 SHOWN

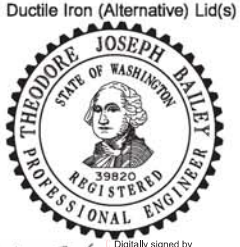

Theodore Joseph Bailey
Digitally signed by baileyte@wsdot.wa.gov
DN: cn=baileyte@wsdot.wa.gov
Date: 2014.04.16 14:51:21 -07'00'

HEAVY-DUTY JUNCTION BOX TYPES 4, 5, & 6

STANDARD PLAN J-40.20-02

SHEET 1 OF 2 SHEETS

APPROVED FOR PUBLICATION
Baketich, Pasco
Jun 11 2014 1:36 PM
STATE DESIGN ENGINEER
Washington State Department of Transportation

DRAWN BY: LISA CYFORD

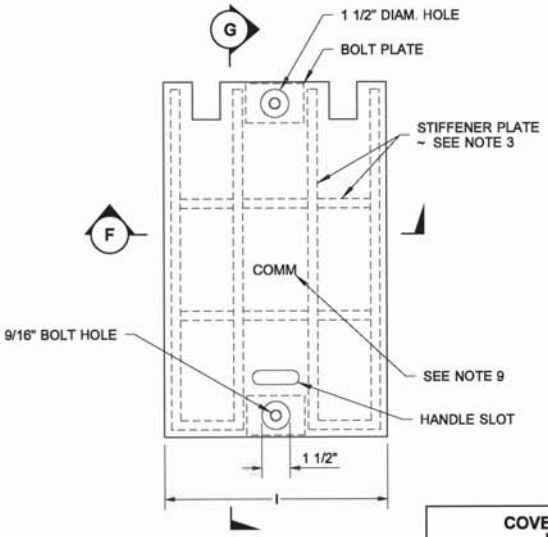

PLAN VIEW
LID

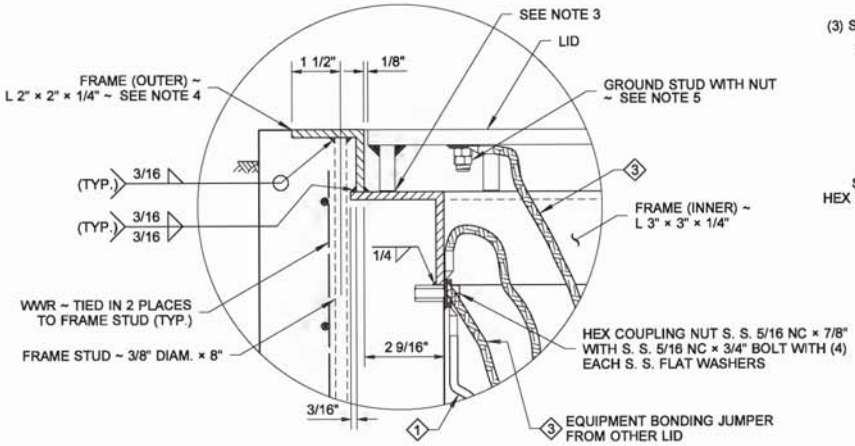

DETAIL C

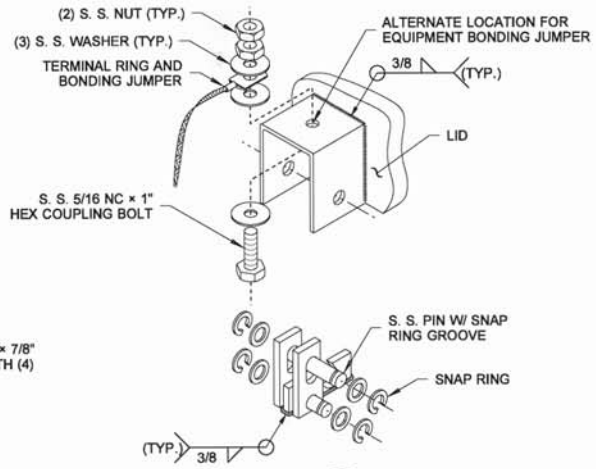

DETAIL E
HINGE

COVER MARKING DETAIL

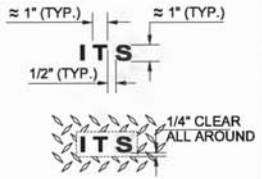

SEE NOTE 9

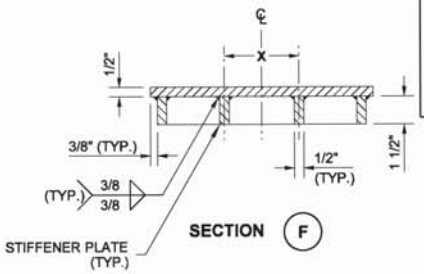

SECTION F

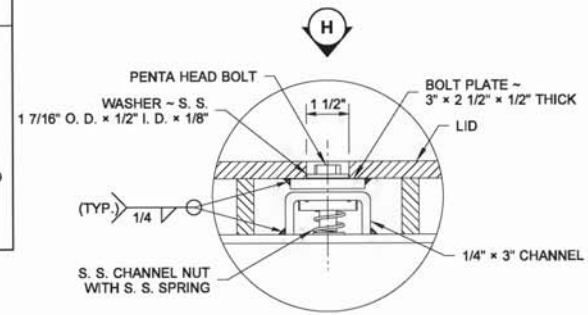

DETAIL D
LOCKING BOLT

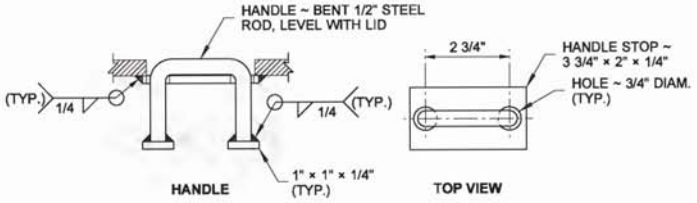

HANDLE
TOP VIEW

DETAIL B

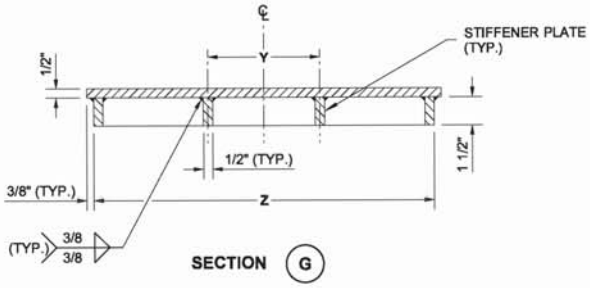

SECTION G

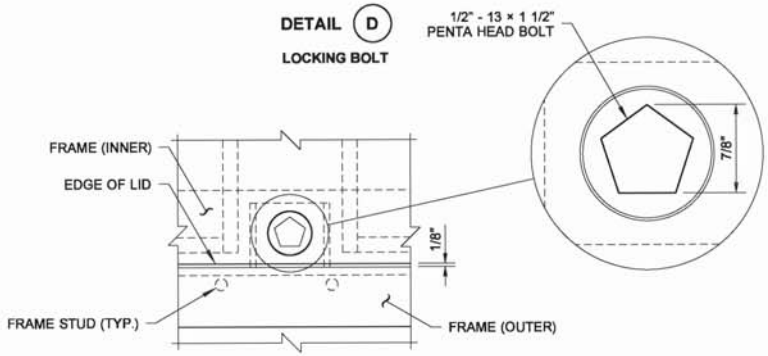

VIEW H

Theodore Joseph Bailey
Digitally signed by baileyte@wsdot.wa.gov
DN: cn=baileyte@wsdot.wa.gov
Date: 2014.04.16 14:51:38 -07'00'

HEAVY-DUTY JUNCTION BOX TYPES 4, 5, & 6

STANDARD PLAN J-40.20-02

SHEET 2 OF 2 SHEETS

APPROVED FOR PUBLICATION
Bakotich, Pasco
Jun 11 2014 1:36 PM
STATE DESIGN ENGINEER
Washington State Department of Transportation

DRAWN BY: LISA CYFORD

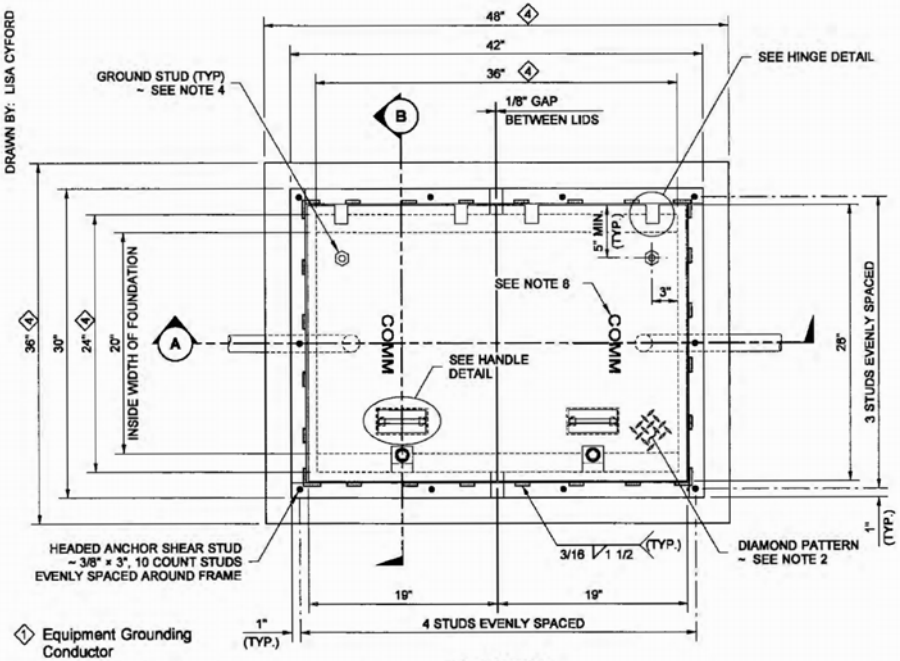

① Equipment Grounding Conductor

② Copper Solderless Crimp Connector

③ Equipment Bonding Jumper

④ Foundation

⑤ See Contract for conduit size and number

PLAN VIEW

LOCKING LID STANDARD DUTY JUNCTION BOX

COVER MARKING DETAIL

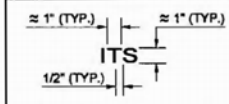

SEE NOTE 8

NOTES

1. All box dimensions are approximate. Exact configurations vary among manufacturers.
2. Minimum lid thicknesses are shown. The diamond pattern shall be a minimum of 28% of the overall thickness. Junction Boxes installed in sidewalks, walkways, and shared-use paths shall have a slip-resistant coating on the lid and lip cover plate and shall be installed with the surface flush with and matched to the grade of the sidewalk, walkway, or shared-use path. The non-slip lid shall be identified with permanent markings on the underside, indicating the type of surface treatment (see Contract Documents for details) and the year of manufacture. The permanent marking shall be 1/8" inch line thickness formed with a stainless steel weld bead and shall be placed prior to hot-dip galvanizing.
3. Lid support members shall be 3/16" min. thick steel C, L, or T shape, welded to the frame. Exact configurations vary among manufacturers.
4. A 1/4-20 NC × 3/4" S. S. ground stud shall be welded to the bottom of each lid; include (2) S. S. nuts and (2) S. S. flat washers.
5. The hinges shall allow the lids to open 180°.
6. Bolts and nuts shall be liberally coated with anti-seize compound.
7. Connect Equipment Bonding Jumper to ground stud on lid. As an alternative to the ground stud connection, the Equipment Bonding Jumper shall be attached to the front face of the hinge pocket with a 5/16-20 NC × 3/4" S. S. bolt, (2) each S. S. nuts, and (2) each S. S. flat washers. Equipment Bonding Jumper shall be #8 AWG min. × 4' of tinned braided copper.
8. The System Identification letters shall be 1/8" line thickness formed by engraving, stamping, or with a S. S. weld bead. See Cover Marking detail. Grind off diamond pattern before forming letters. See **Standard Specification 9-29.2(4)** for details.
9. See the Standard Specifications for alternative reinforcement and class of concrete.
10. See **Standard Plan J-40.10** for Welded Wire Reinforcement and Headed Anchor Shear Stud attachment details.
11. Capacity ~ conduit diameter = 24"
12. Lid Bolt Down Attachment Tab provides a method of retrofitting by using a mechanical process in lieu of welding. Attachment Tab shown depicts a typical component arrangement; actual configurations of assembly will vary among manufacturers. See approved manufacturers' shop drawing for specifics.
13. Unless otherwise noted in the plans or approved by the Engineer, Junction Boxes, Cable Vaults and Pull Boxes shall not be placed within the sidewalk, walkway, shared use path, traveled way or paved shoulders. All Junction Boxes, Cable Vaults, and Pull Boxes placed within the traveled way or paved shoulders shall be Heavy-Duty.
14. Distance between the top of the conduit and the bottom of the Junction Box lid shall be 6" min. to 8" max. for final grade of new construction only. See **Standard Specification 8-20.3(5).** Where adjustments are to be made to existing Junction Boxes, or for interim construction stages during the contract, the limits shall be from 6" min. to 10" max. See **Standard Specification 8-20.3(6).**

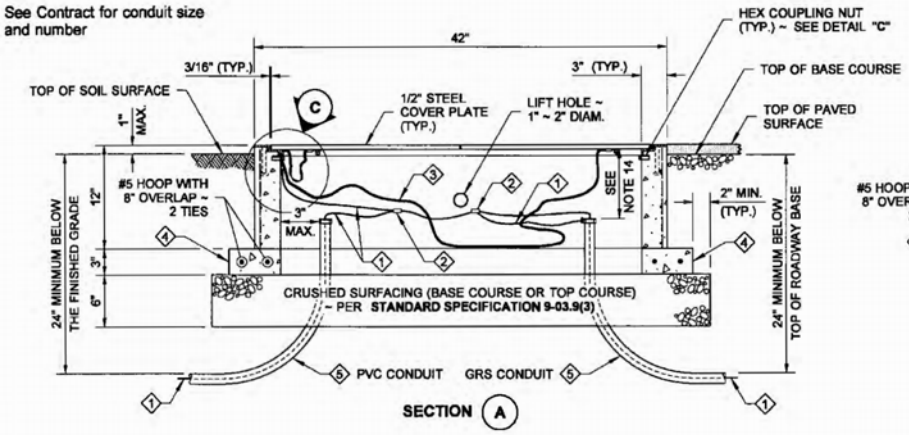

SECTION (A)

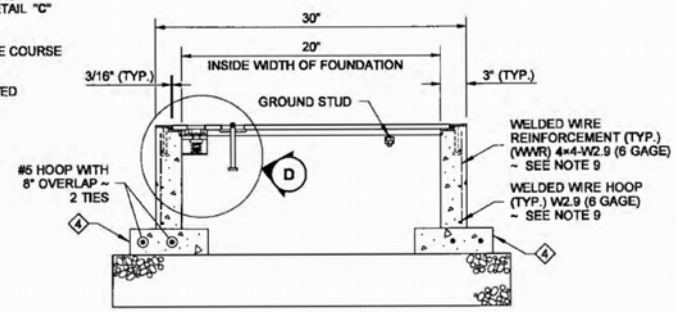

SECTION (B)

CONDUITS NOT SHOWN

THEODORE JOSEPH BAILEY
STATE OF WASHINGTON
39820
REGISTERED PROFESSIONAL ENGINEER

5-15-13

LOCKING LID STANDARD DUTY JUNCTION BOX TYPE 8

STANDARD PLAN J-40.30-03

SHEET 1 OF 2 SHEETS

APPROVED FOR PUBLICATION

STATE DESIGN ENGINEER — DATE 5/20/13

Washington State Department of Transportation

DRAWN BY: LISA CYFORD

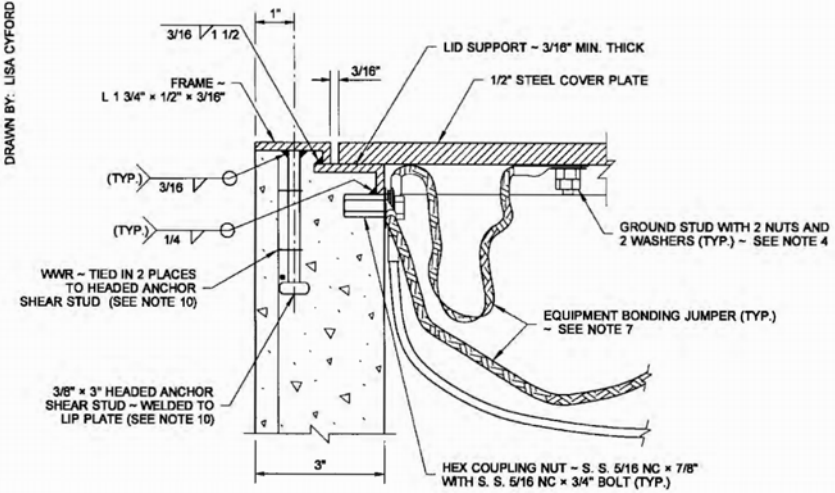

DETAIL C

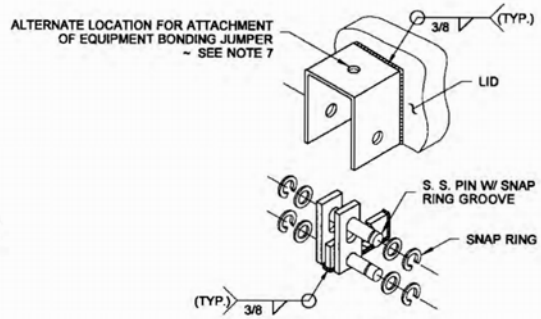

HINGE DETAIL

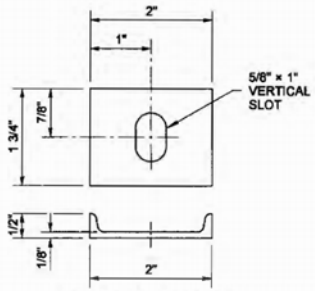

BOLT PLATE CHANNEL

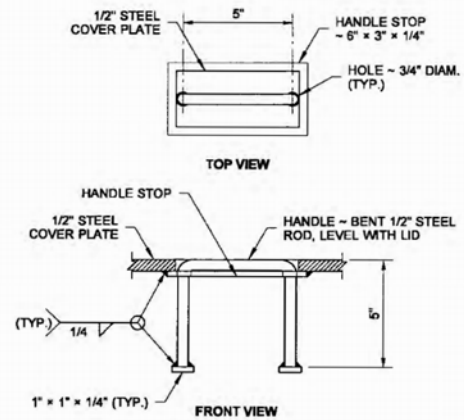

HANDLE DETAIL

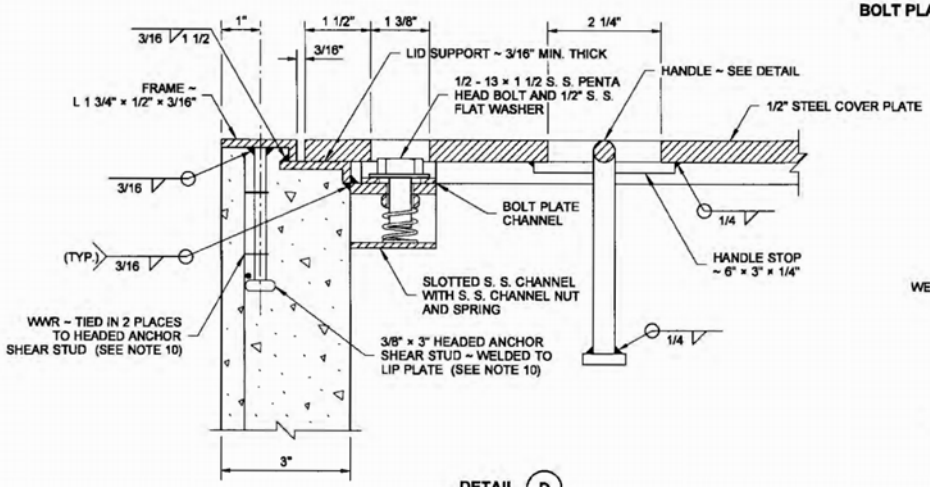

DETAIL D

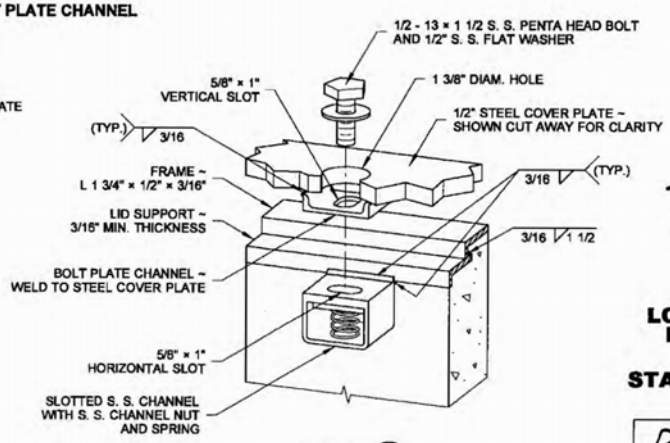

DETAIL D
ISOMETRIC VIEW

5-15-13

LOCKING LID STANDARD DUTY JUNCTION BOX TYPE 8

STANDARD PLAN J-40.30-03

SHEET 2 OF 2 SHEETS

APPROVED FOR PUBLICATION

STATE DESIGN ENGINEER — DATE 5/15/13

Washington State Department of Transportation

DRAWN BY: LISA CYFORD

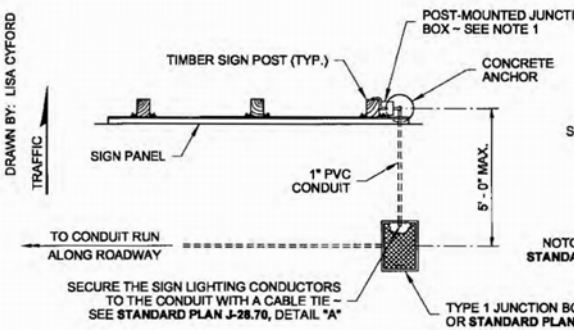

PLAN

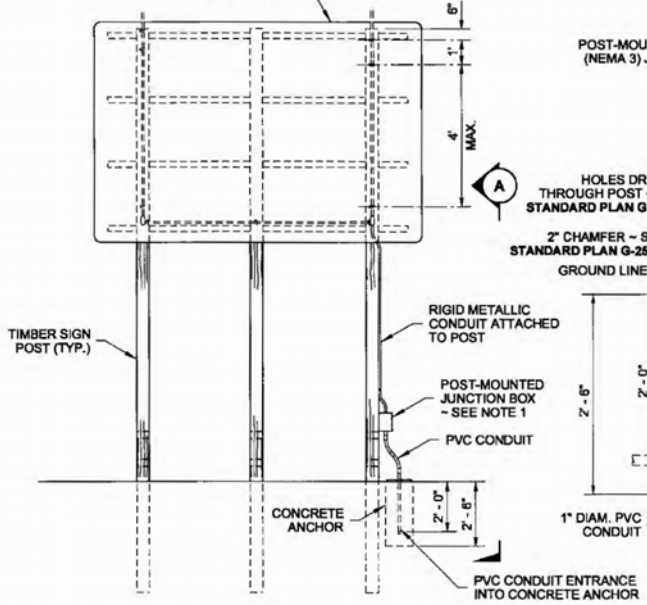

ELEVATION

JUNCTION BOX ATTACHMENT TO TIMBER SIGN SUPPORT

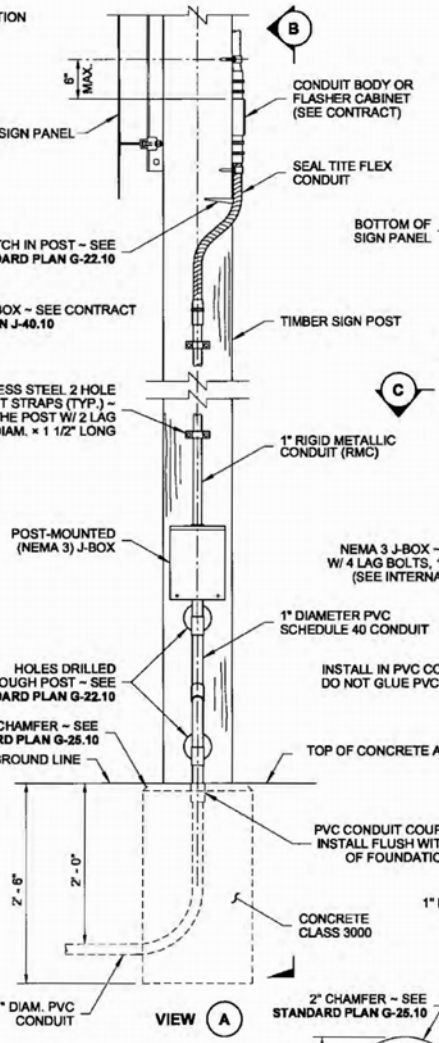

VIEW A

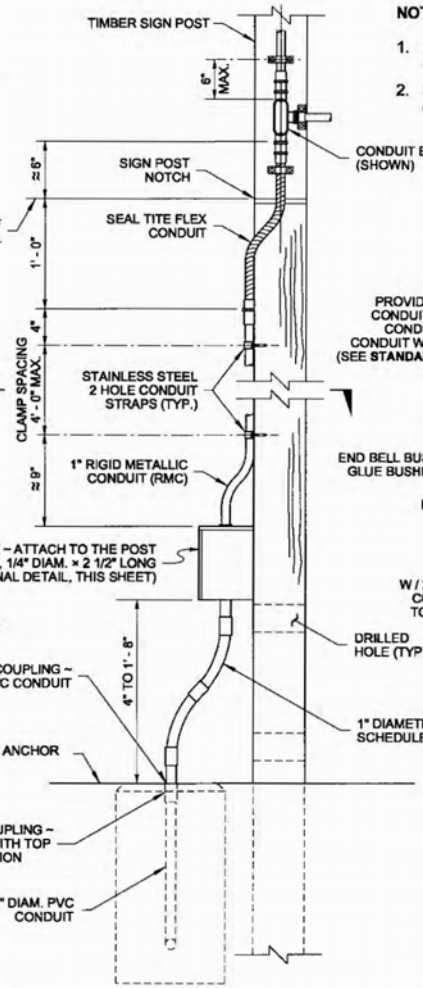

VIEW B

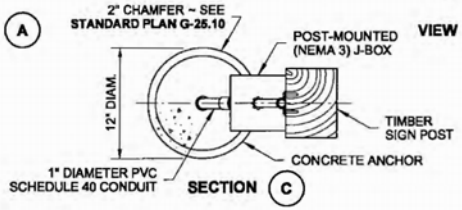

SECTION C

NOTE

1. Install the Junction Box on the Timber Sign Post or the Steel Sign Support that is farthest from the roadway.
2. See **Standard Plan J-21.16** for Flashing Beacon Installation details. See **Standard Plan J-21.17** for Electrical Wiring details.

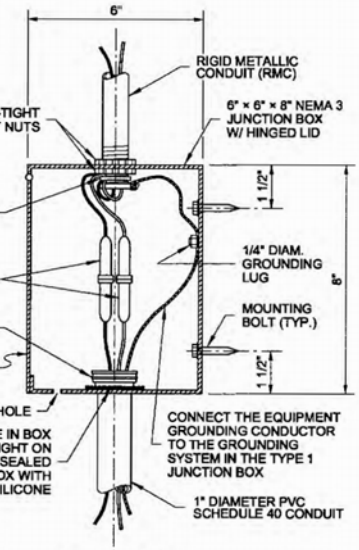

JUNCTION BOX INTERNAL DETAIL

5-29-13

SIGN POST-MOUNTED JUNCTION BOX

STANDARD PLAN J-40.35-01

SHEET 1 OF 3 SHEETS

APPROVED FOR PUBLICATION

STATE DESIGN ENGINEER — DATE 5/29/13

Washington State Department of Transportation

DRAWN BY: LISA CYFORD

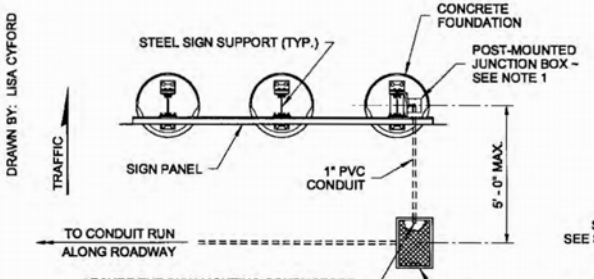

PLAN

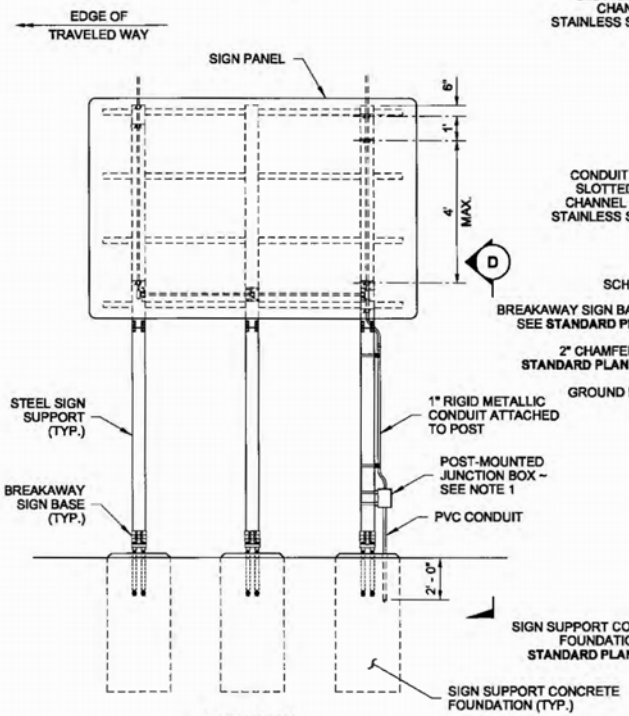

ELEVATION

JUNCTION BOX ATTACHMENT TO STEEL SIGN SUPPORT

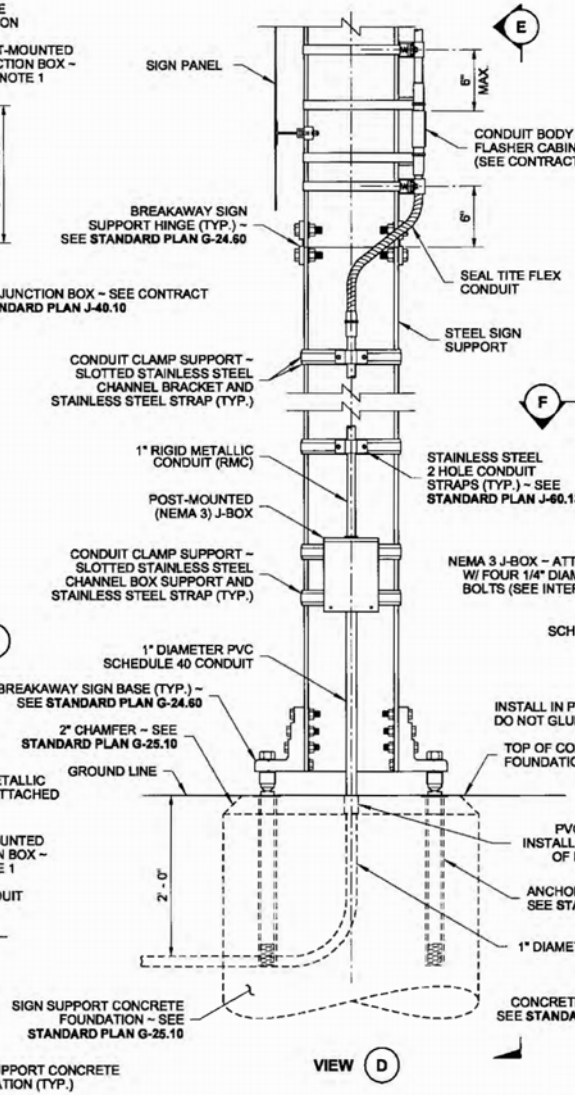

VIEW D

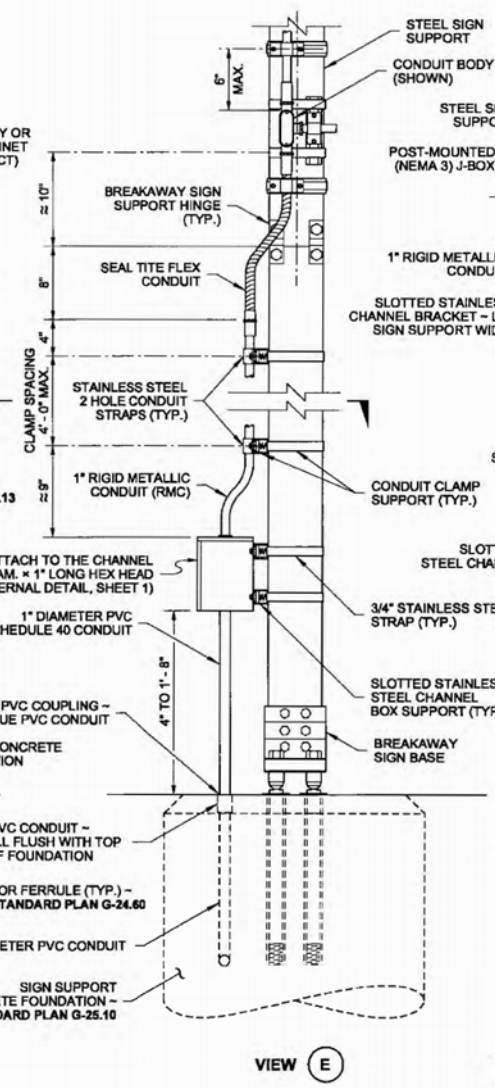

VIEW E

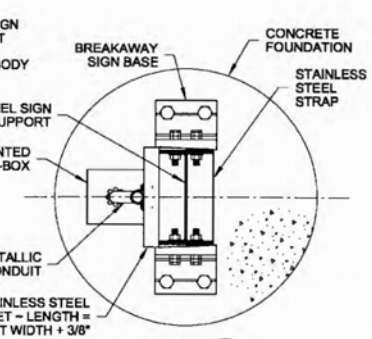

SECTION F

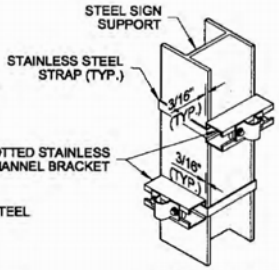

SLOTTED STEEL CHANNEL ATTACHMENT DETAILS

5-29-13

SIGN POST-MOUNTED JUNCTION BOX

STANDARD PLAN J-40.35-01

SHEET 2 OF 3 SHEETS

APPROVED FOR PUBLICATION

STATE DESIGN ENGINEER — DATE 5/29/13

Washington State Department of Transportation

DRAWN BY: LISA CYFORD

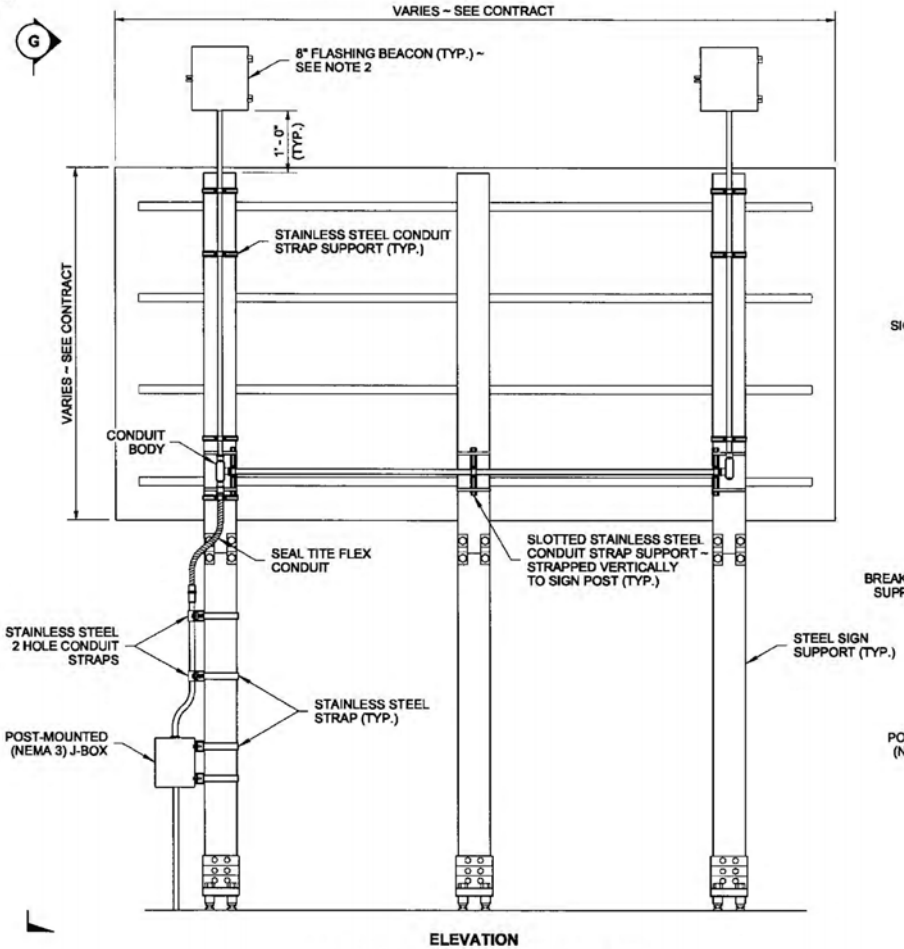

ELEVATION

FLASHING BEACON ATTACHMENT

(STEEL SIGN SUPPORT SHOWN)

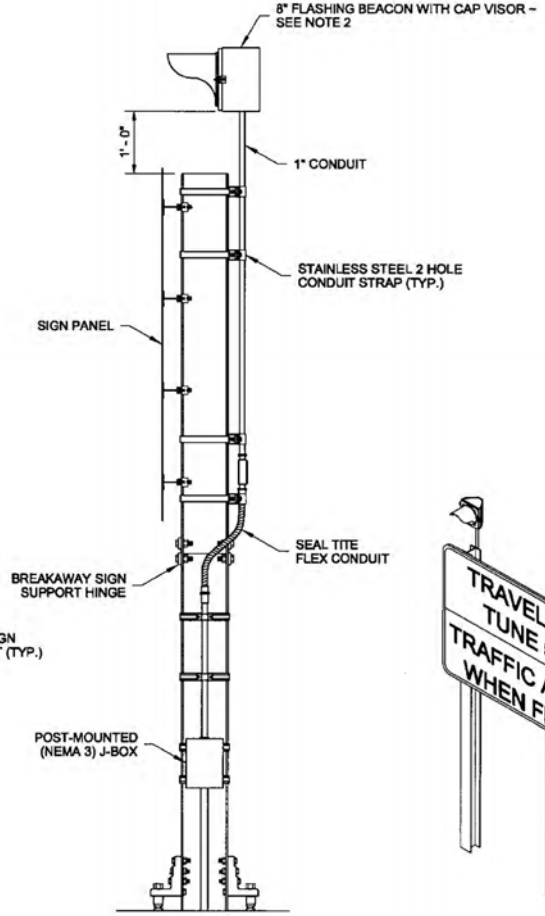

VIEW G

RIGHT ISOMETRIC VIEW

TRAVELER INFORMATION SIGN SHOWN ~ SEE CONTRACT FOR SIGN MESSAGE AND SIZE

THEODORE JOSEPH BAUER
STATE OF WASHINGTON
39820
REGISTERED PROFESSIONAL ENGINEER

5-29-13

SIGN POST-MOUNTED JUNCTION BOX

STANDARD PLAN J-40.35-01

SHEET 3 OF 3 SHEETS

APPROVED FOR PUBLICATION

STATE DESIGN ENGINEER — DATE 5/29/13

Washington State Department of Transportation

DRAWN BY: LISA CYFORD

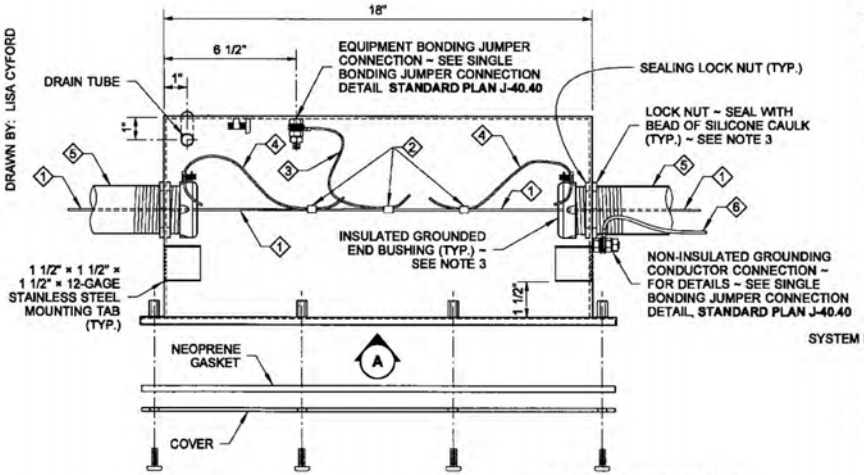

PLAN VIEW

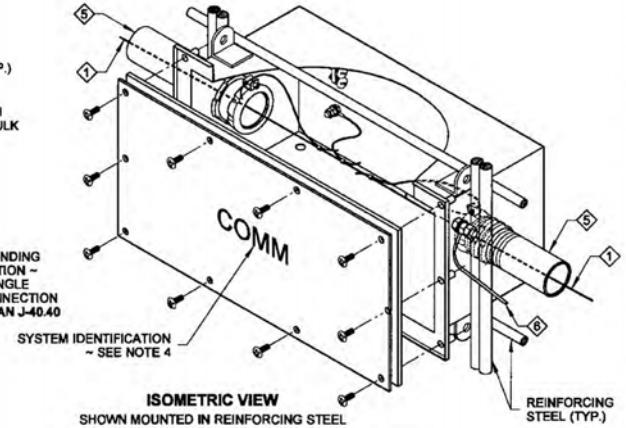

ISOMETRIC VIEW
SHOWN MOUNTED IN REINFORCING STEEL

NOTES

1. Junction Box shall be constructed of 12-gage, Type 304 stainless with steel welded seam construction. Finish shall be # 2B for backbox and # 4 for the cover. Mounting Tabs shall be constructed of 12-gage, Type 304 stainless steel.
2. Holes for conduit(s) shall be field drilled or punched in the box ends. See **Section B**.
3. Fittings shall be UL listed and CSA-certified concrete tight on the outside of the Junction Box conduit connection. Use an insulated, grounded end bushing on the inside for GRS conduit. Use a sealing lock nut and a rigid PVC conduit bushing on the inside for PVC conduit.
4. The System Identification letters shall be 1/8" line thickness formed by engraving, stamping, or with a stainless steel weld bead. **See Standard Specification 9-29.2(4)** for details.
5. Liberally coat the threads of the cover fasteners with anti-seize compound during construction and before final closure.
6. Junction Box shall only be used in barriers with stationary-forms. If Slip-Form Traffic Barrier is required, use Conduit shown in the Alternative PVC Conduit detail.
7. Conduit Capacity = 8" (4" per end).
8. Conduits shall only enter Junction Box from ends as shown.
9. When converting RMC to PVC in Stationary-Form Barriers, route a # 8 Stranded, Non-Insulated Grounding Conductor along Conduit, secure Conductor to Conduit with clamp as shown on Conduit Deflection Fitting "B" detail, convert RMC to PVC in Stationary-Form Barrier (per **Standard Plan J-60.11**): omit Conductor when this detail is not used.

1. Equipment Grounding Conductor
2. Copper Solderless Crimp Connector
3. Equipment Bonding Jumper
4. Equipment Bonding Jumper ~ Omit when PVC Conduit installed
5. See Contract for conduit size and number
6. # 8 AWG Stranded, Non-insulated Grounding Conductor ~ See Note 9

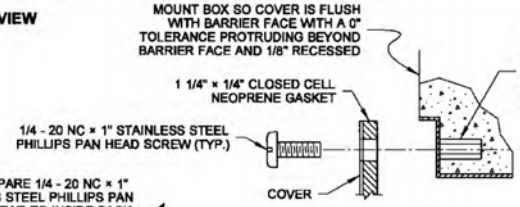

DETAIL C

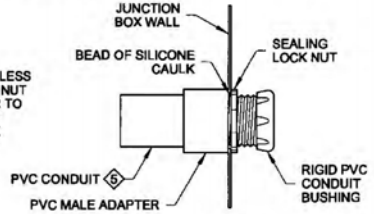

ALTERNATIVE PVC CONDUIT DETAIL

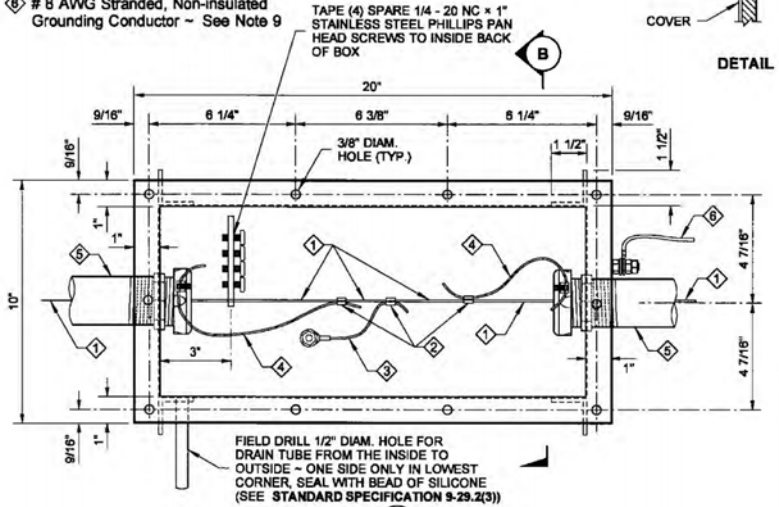

VIEW A

SYSTEM IDENTIFICATION DETAIL

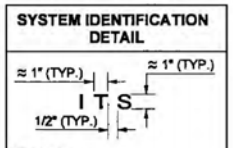

SEE NOTE 4

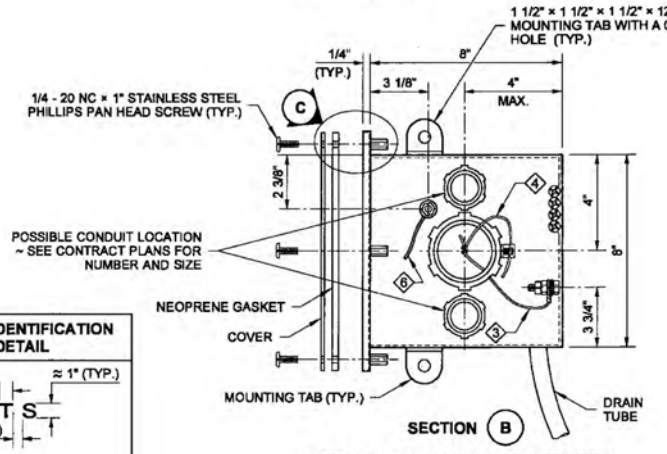

SECTION B

VERTICALLY CENTER AND MAINTAIN REQUIRED SPACING WHEN INSTALLING MULTIPLE CONDUITS

NEMA 4X NON-ADJUSTABLE FLUSH-MOUNT JUNCTION BOX

STANDARD PLAN J-40.36-01

SHEET 1 OF 1 SHEET

APPROVED FOR PUBLICATION

STATE DESIGN ENGINEER — DATE 5/20/13

Washington State Department of Transportation

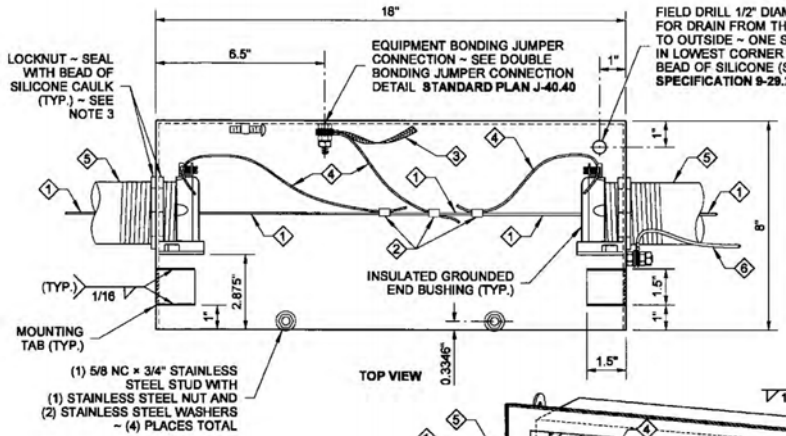

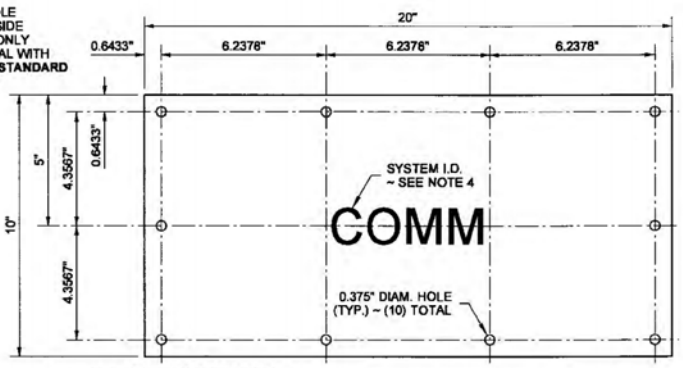

NOTES

1. Junction Box shall be constructed of 12- gage, Type 304 stainless steel with welded seam construction. Finish shall be # 2B for backbox and # 4 for the cover. Mounting Tabs shall be constructed of 12-gage, Type 304 stainless steel.
2. Holes for conduit(s) shall be field drilled or punched in box ends. See SIDE VIEW.
3. Fittings shall be UL listed and CSA-certified concrete tight on the outside of the Junction Box conduit connection. Use an insulated, grounded end bushing on the inside for GRS conduit.
4. The System Identification letters shall be 1/8" line thickness formed by engraving, stamping, or with a stainless steel weld bead. See **Standard Specification 9-29.2(4)** for details.
5. Liberally coat the threads of the cover fasteners with anti-seize compound during construction and before final closure.
6. Detail shown for box installation is Slip-Form Traffic Barrier.
7. Conduit capacity = 8".
8. Conduits shall enter the Junction Box from the ends as shown.
9. This Junction Box type shall not be surface mounted. For Surface-Mounted Junction Boxes, see **Standard Plans J-40.38 and J-40.39.**
10. Equipment Bonding Jumper shall be # 8 AWG (min.) × 1 foot of tinned, braided copper.
11. When converting RMC to PVC in Stationary-Form Barriers, route a # 8 Stranded, Non-Insulated Grounding Conductor along Conduit, secure Conductor to Conduit with clamp as shown on Conduit Deflection Fitting "B" detail, convert RMC to PVC in Stationary-Form Barrier (per **Standard Plan J-60.11**): omit Conductor when this detail is not used.
12. When additional Conduits are required, Bonding and Grounding wiring shall match configuration as shown in the perspective view. See Contract for number and size of additional Conduits.
13. Apply a 3/16" bead of caulk around Junction Box body and Adjustable Face to provide a proper seal prior to installation.

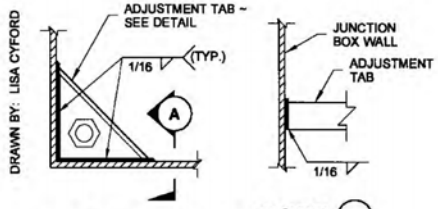

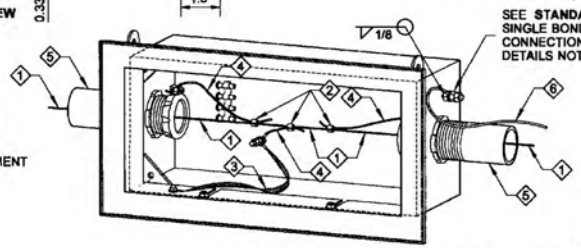

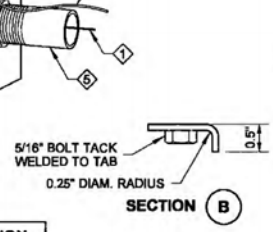

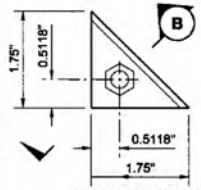

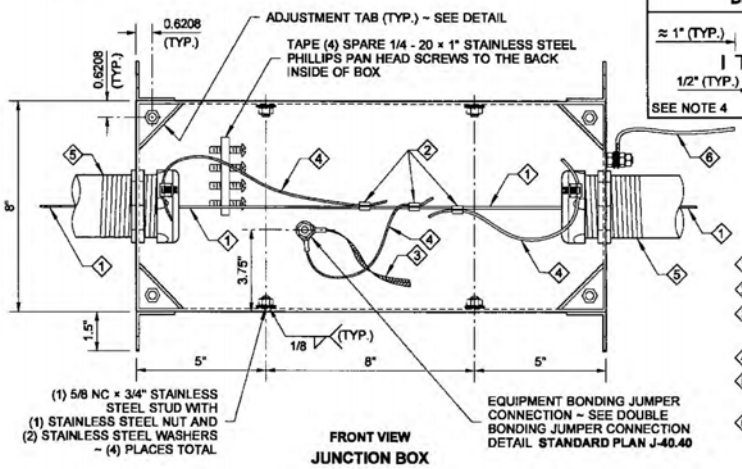

SYSTEM IDENTIFICATION DETAIL

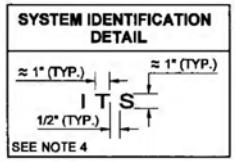

1. Equipment Grounding Conductor
2. Copper Solderless Crimp Connector
3. Equipment Bonding Jumper ~ See note 10
4. Equipment Bonding Jumper
5. See Contract for conduit size and number
6. # 8 AWG Stranded, Non-insulated Grounding Conductor ~ See Note 11

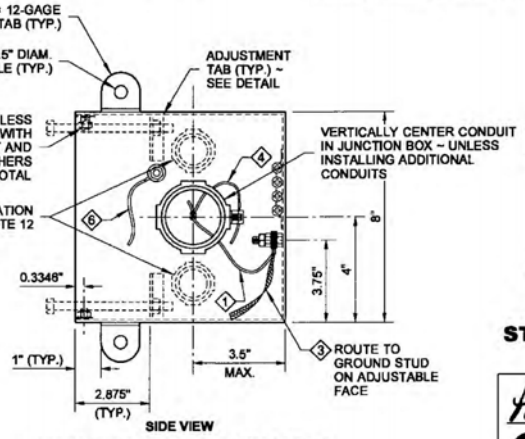

5-15-13

NEMA 3R ADJUSTABLE FLUSH-MOUNT JUNCTION BOX

STANDARD PLAN J-40.37-01

SHEET 1 OF 2 SHEETS

APPROVED FOR PUBLICATION

STATE DESIGN ENGINEER — DATE 5/20/13

Washington State Department of Transportation

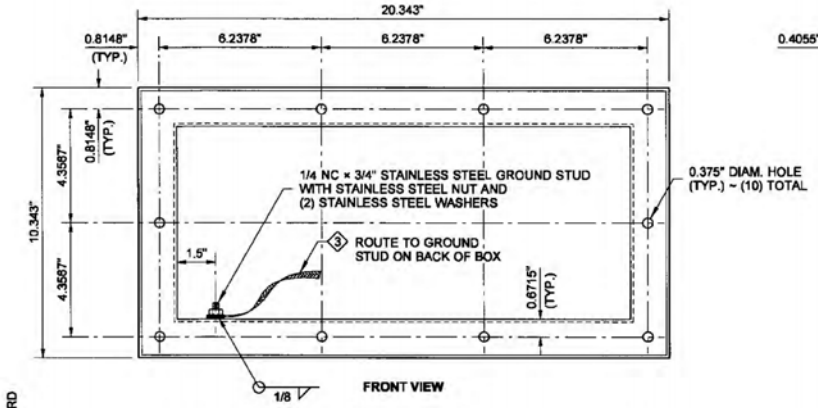

FRONT VIEW

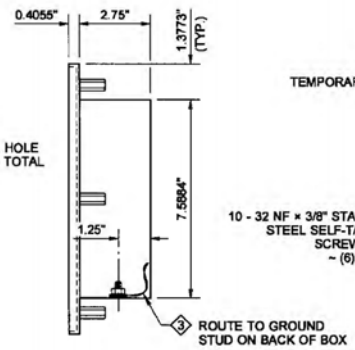

SIDE VIEW

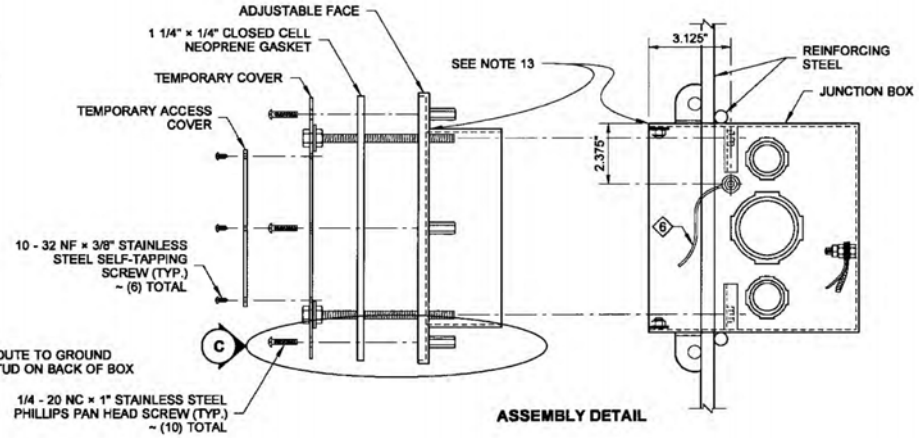

ASSEMBLY DETAIL

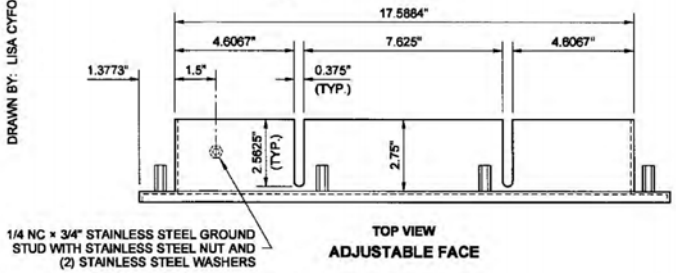

TOP VIEW

ADJUSTABLE FACE

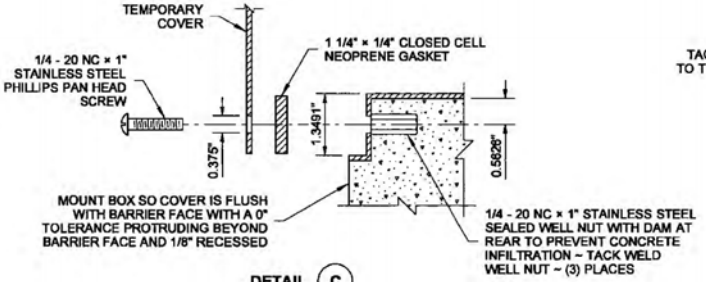

DETAIL C

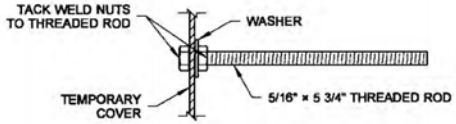

ADJUSTMENT BOLT DETAIL

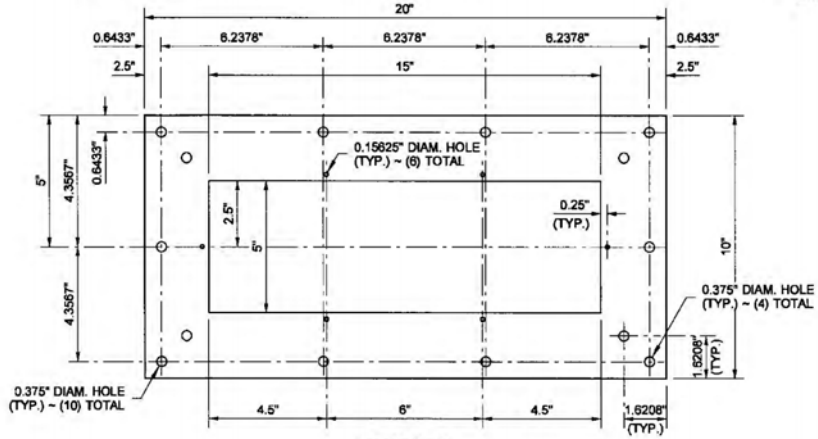

FRONT VIEW

TEMPORARY COVER

12-GAGE STAINLESS STEEL

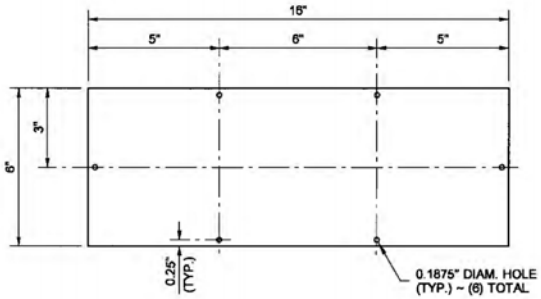

FRONT VIEW

TEMPORARY ACCESS COVER

12-GAGE STAINLESS STEEL

DRAWN BY: LISA CYFORD

THEODORE JOSEPH BAILEY
STATE OF WASHINGTON
39820
REGISTERED
PROFESSIONAL ENGINEER

5-15-13

NEMA 3R ADJUSTABLE FLUSH-MOUNT JUNCTION BOX

STANDARD PLAN J-40.37-01

SHEET 2 OF 2 SHEETS

APPROVED FOR PUBLICATION

STATE DESIGN ENGINEER — DATE 5/20/13

Washington State Department of Transportation

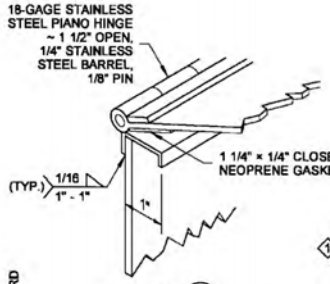

SECTION (A)

ISOMETRIC VIEW

DRAWN BY: LISA CYFORD

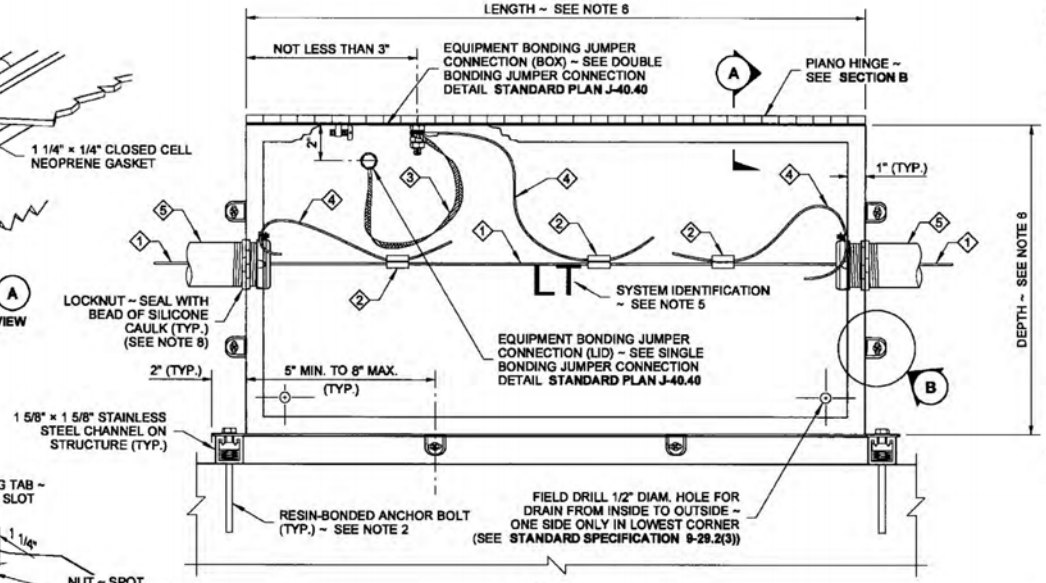

PLAN VIEW

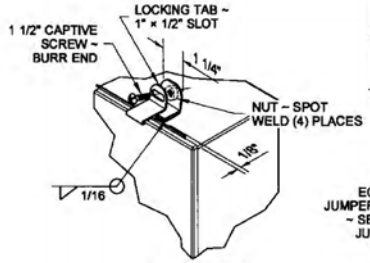

DETAIL (B)

LOCKING TAB DETAIL

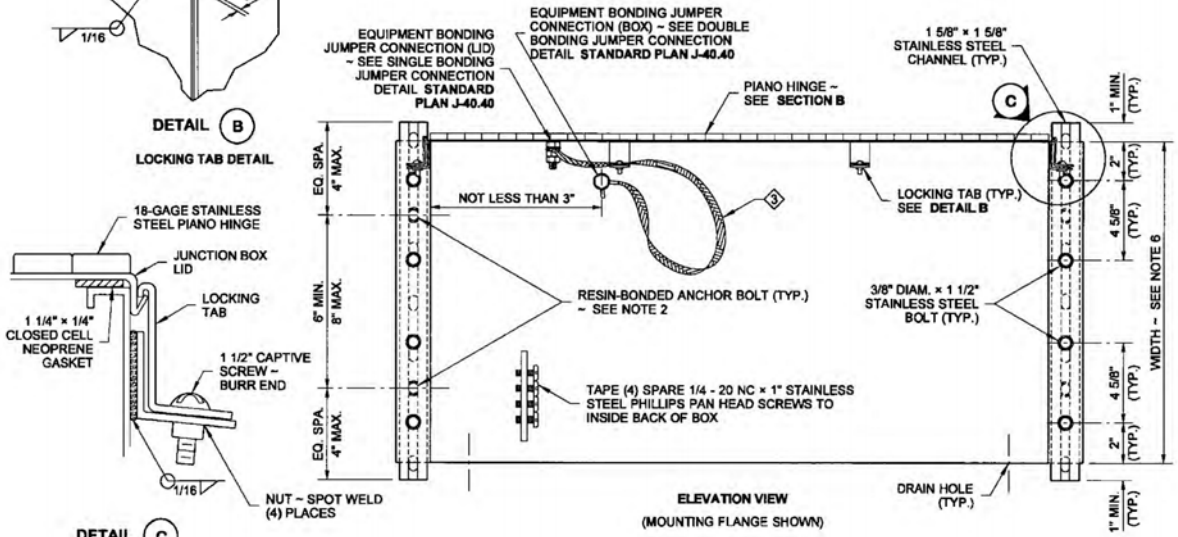

ELEVATION VIEW

(MOUNTING FLANGE SHOWN)

DETAIL (C)

NOTES

1. Drilling through reinforcing steel is not allowed. If steel is hit while drilling, the location shall be moved and the abandoned hole filled with grout conforming to **Standard Specification 6-02.3(20).**
2. Mount the stainless steel support using an approved resin-bonded anchor system installed per manufacturer's recommendation. Anchor bolt embedment shall be 4 1/2" minimum. Resin-bonded anchors shall be stainless steel and shall be 3/8" diameter. Expansion Anchors are not allowed.
3. There shall be a minimum of 3" edge distance to the centerline of anchor holes in the concrete.
4. See **Standard Plan J-60.13** for Stainless Steel Channel details.
5. The System Identification letters on the box lid shall be 1/8" line thickness formed by engraving, stamping, or with a stainless steel weld bead. See System Identification Detail and **Standard Specifications 9-29.2(4).**
6. Junction Box shall be dimensioned as shown in the Contract. If the conduit sizes shown in the Contract are changed, the box dimensions shall be revised in accordance with **NEC 314.28** using the 8 times multiplier for length and width dimensions.
7. Equipment Bonding Jumper shall be # 8 AWG (min.) × 1 foot of tinned, braided copper.
8. Fittings shall be UL listed and CSA-certified watertight on the outside of the Junction Box conduit connection. An insulated grounded end bushing shall be used to terminate Rigid Metal Conduit.
9. Junction Box shall be constructed of 12-gage, Type 304 stainless steel with welded seam construction and # 4 finish. Mounting Flange shall also be 12-gage, Type 304 stainless steel.

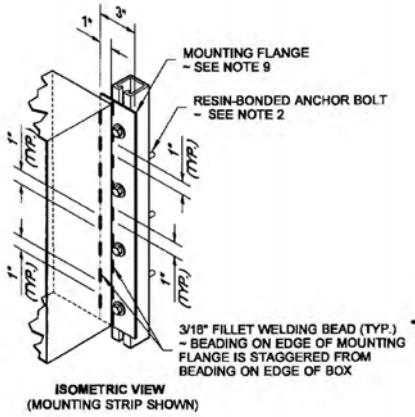

ISOMETRIC VIEW

(MOUNTING STRIP SHOWN)

SYSTEM IDENTIFICATION DETAIL

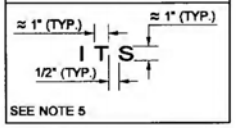

SEE NOTE 5

1. Equipment Grounding Conductor
2. Copper Solderless Crimp Connector
3. Equipment Bonding Jumper ~ See Note 7
4. Equipment Bonding Jumper
5. See Contract for conduit size and number

5-15-13

TOP ENTRY NEMA 4X SURFACE-MOUNT JUNCTION BOX

STANDARD PLAN J-40.38-01

SHEET 1 OF 1 SHEET

APPROVED FOR PUBLICATION

STATE DESIGN ENGINEER — DATE 5/20/13

Washington State Department of Transportation

DRAWN BY: LISA CYFORD

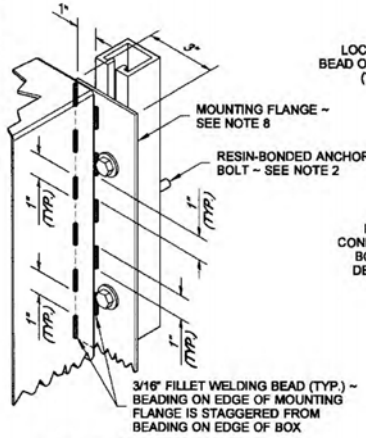

DETAIL (A)
STAINLESS STEEL CHANNEL MOUNTING DETAIL

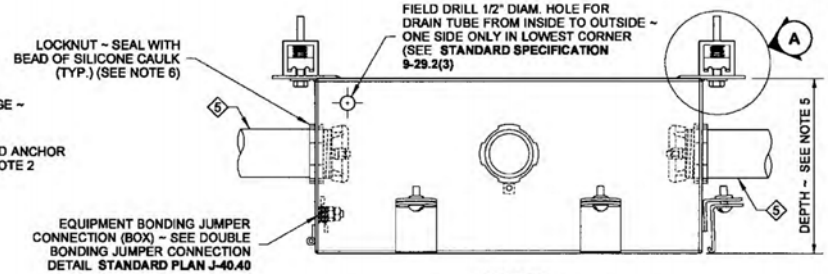

PLAN VIEW
(DOOR AND WIRING NOT SHOWN FOR CLARITY)

NOTES

1. Drilling through reinforcing steel is not allowed. If steel is hit while drilling, the location shall be moved and the abandoned hole filled with grout conforming to **Standard Specification 6-02.3(20).**
2. Mount the stainless steel support using an approved resin-bonded anchor system, installed per manufacturer's recommendation. Resin-bonded anchors shall be stainless steel and shall be of 3/8" diameter (Expansion Anchors are not allowed). Anchor bolt embedment shall be 4 1/2" min.
3. There shall be a minimum of 3" edge distance to the centerline of anchor holes in concrete. See **Standard Plan J-60.13** for Stainless Steel Channel details.
4. The System Identification letters on the box lid shall be 1/8" line thickness formed by engraving, stamping, or with a stainless steel weld bead. See System Identification Detail and **Standard Specifications 9-29.2(4).**
5. Junction Box shall be dimensioned as shown in the Contract. If the conduit sizes shown in the Contract are changed, the box dimensions shall be revised in accordance with **NEC 314.28** using the 8 times multiplier for length and width dimensions.
6. Fittings shall be UL listed and CSA-certified watertight on the outside of the Junction Box conduit connection. An insulated grounded end bushing shall be used to terminate Rigid Metal Conduit.
7. Equipment Bonding Jumper shall be # 8 AWG (min.) × 1 foot of tinned, braided copper.
8. Junction Box shall be constructed of 12-gage, Type 304 stainless steel with welded seam construction and # 4 finish. Mounting Flange shall also be 12-gage, Type 304 stainless steel.

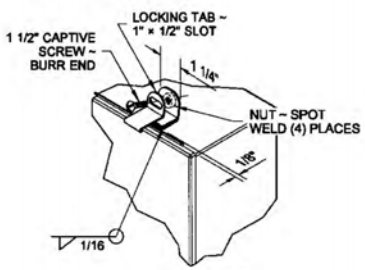

DETAIL (B)
LOCKING TAB DETAIL

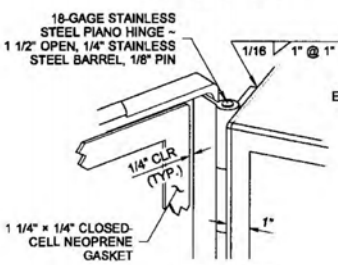

DETAIL (C)
PIANO HINGE DETAIL

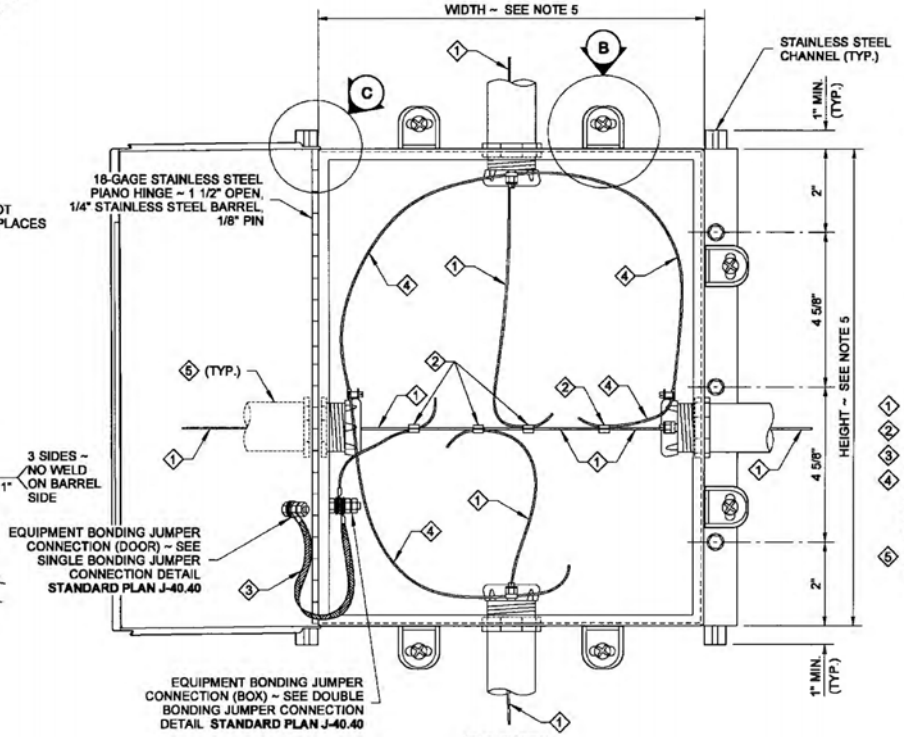

FRONT VIEW
(DOOR OPEN TO SHOW WIRE CONNECTION)

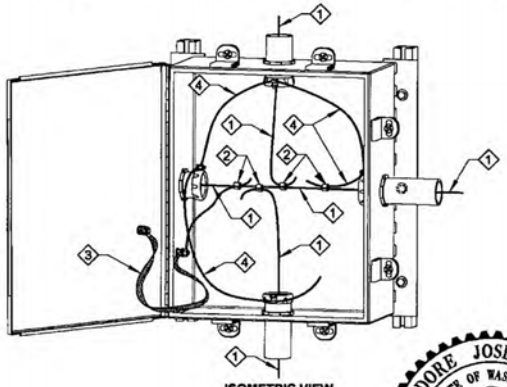

ISOMETRIC VIEW

1. Equipment Grounding Conductor
2. Copper Solderless Crimp Connector
3. Equipment Bonding Jumper ~ See note 7
4. Equipment Bonding Jumper shall be a continuous conductor. Route to each grounded end bushing and then terminate at equipment grounding conductor.
5. See Contract for conduit size and number

SYSTEM IDENTIFICATION DETAIL

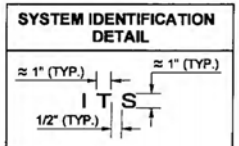

SEE NOTE 4

5-15-13

FRONT ENTRY NEMA 4X SURFACE-MOUNT JUNCTION BOX

STANDARD PLAN J-40.39-00

SHEET 1 OF 1 SHEET

APPROVED FOR PUBLICATION

STATE DESIGN ENGINEER — DATE 5/20/13

Washington State Department of Transportation

DRAWN BY: LISA CYFORD

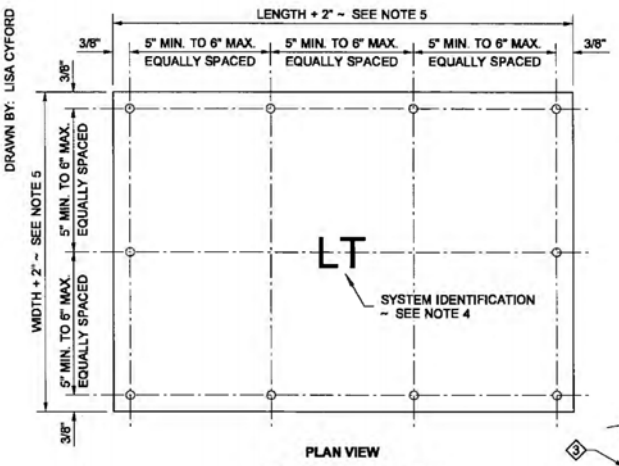

PLAN VIEW

JUNCTION BOX COVER

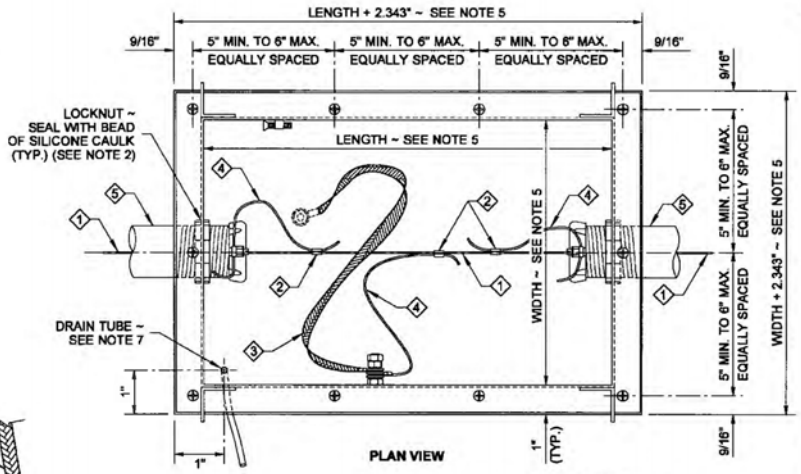

PLAN VIEW

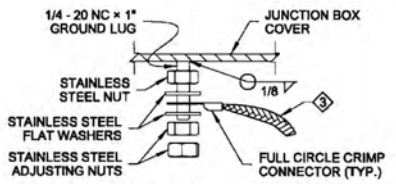

SINGLE BONDING JUMPER CONNECTION DETAIL

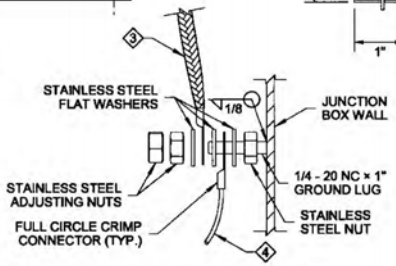

DOUBLE BONDING JUMPER CONNECTION DETAIL

1. Equipment Grounding Conductor
2. Copper Solderless Crimp Connector
3. Equipment Bonding Jumper ~ See note 3
4. Equipment Bonding Jumper
5. See Contract for conduit size and number

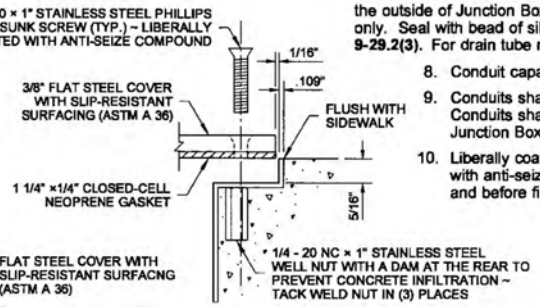

DETAIL (A)

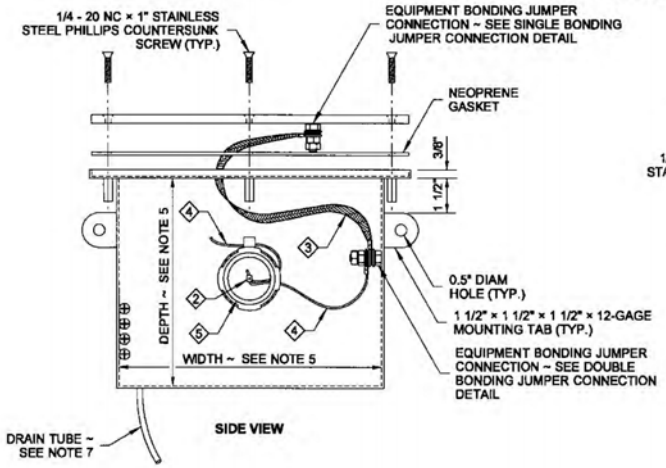

SIDE VIEW

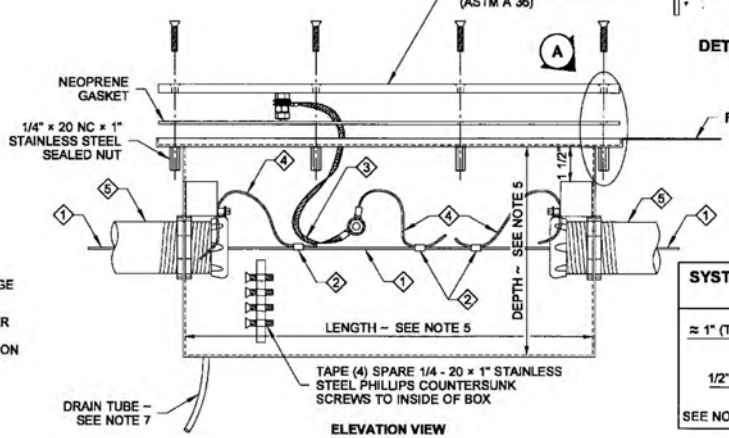

ELEVATION VIEW

SYSTEM IDENTIFICATION DETAIL

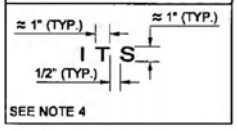

SEE NOTE 4

NOTES

1. Junction Box shall be constructed of 12-gage, Type 304 stainless steel with welded seam construction. Mounting Tabs shall be constructed of 12-gage, Type 304 stainless steel. Cover shall be constructed of ASTM A 36 steel with slip-resistant surfacing.
2. Fittings shall be UL listed and CSA-certified concrete tight on the outside of the Junction Box connection. Use an insulated, grounded end bushing on the inside for Rigid Metal Conduit.
3. Equipment Bonding Jumper shall be # 8 AWG (min.) × 3 feet minimum of tinned, braided copper.
4. The System Identification letters shall be 1/8" line thickness formed by engraving, stamping, or with a stainless steel weld bead. See **Standard Specification 9-29.2(4).**
5. Junction Box shall be dimensioned as shown in the Contract If the conduit sizes shown in the Contract are changed, the box dimensions shall be revised in accordance with **NEC 314.28** using the 8 times multiplier for length and width dimension.
   - Maximum Height = Sidewalk Depth
   - Maximum Interior Length = 29"
   - Maximum Interior Width = 18"
6. See **Standard Plan J-40.36** for additional requirements.
7. Field drill 1/2" diameter hole for Drain Tube from the inside to the outside of Junction Box. One place, on the lowest side only. Seal with bead of silicone. See **Standard Specification 9-29.2(3).** For drain tube routing, see **Standard Plan J-50.16.**
8. Conduit capacity is 12" ~ 4" per side.
9. Conduits shall enter through the sides as shown. Conduits shall not enter through the bottom of Junction Box.
10. Liberally coat the threads of the cover fasteners with anti-seize compound during construction and before final closure.

5-15-13

NEMA 4X JUNCTION BOX IN SIDEWALK LOCATED ON STRUCTURE

STANDARD PLAN J-40.40-00

SHEET 1 OF 1 SHEET

APPROVED FOR PUBLICATION

STATE DESIGN ENGINEER — DATE 5/20/13

Washington State Department of Transportation

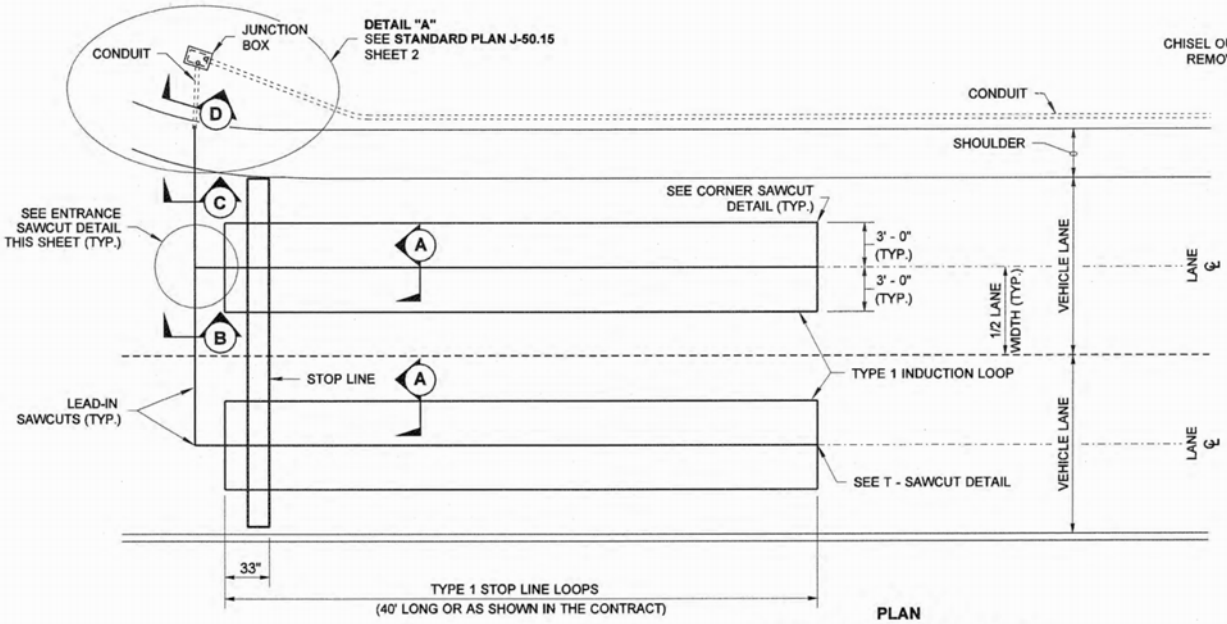

PLAN

TYPE 1 STOP LINE LOOPS

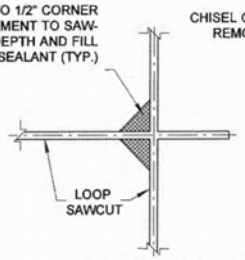

T - SAWCUT DETAIL

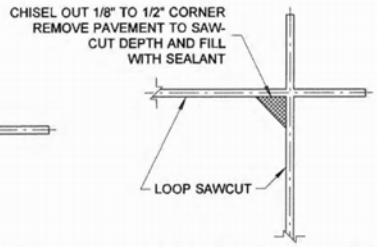

CORNER SAWCUT DETAIL

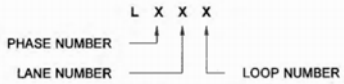

LOOP NUMBER MARKING DETAIL

NOTES

1. For Installation Notes and Details see **Standard Plan J-50.15.**
2. For Sections A, B, C, and D, see **Standard Plan J-50.15.**

DRAWN BY: FERN LIDDELL

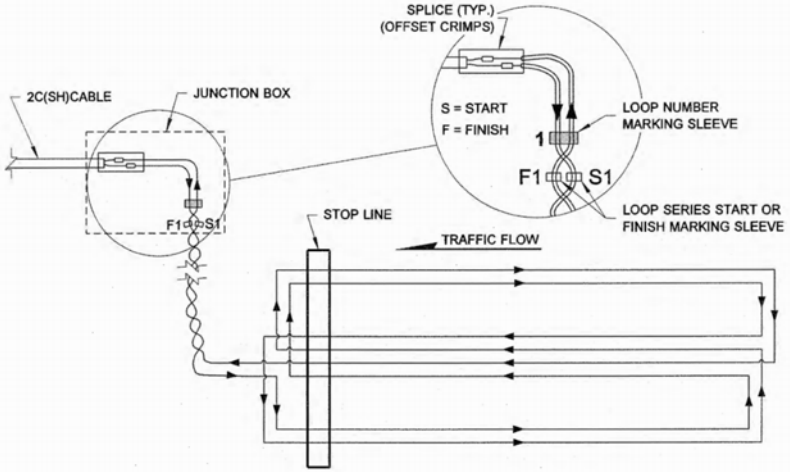

TYPE 1 STOP LINE LOOP WIRING DIAGRAM

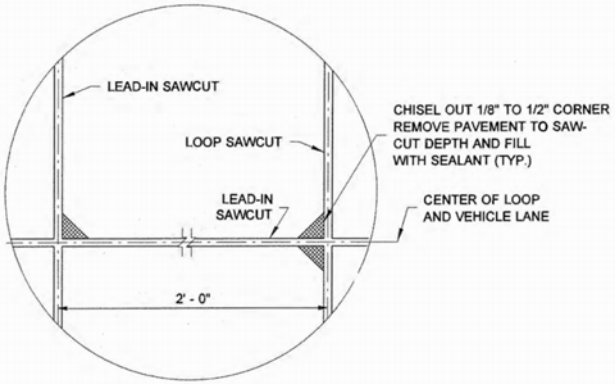

ENTRANCE SAWCUT DETAIL

TYPE 1 INDUCTION LOOP

STANDARD PLAN J-50.10-00

SHEET 1 OF 1 SHEET

APPROVED FOR PUBLICATION

STATE DESIGN ENGINEER — DATE 6/3/11

Washington State Department of Transportation

DRAWN BY: FERN LIDDELL

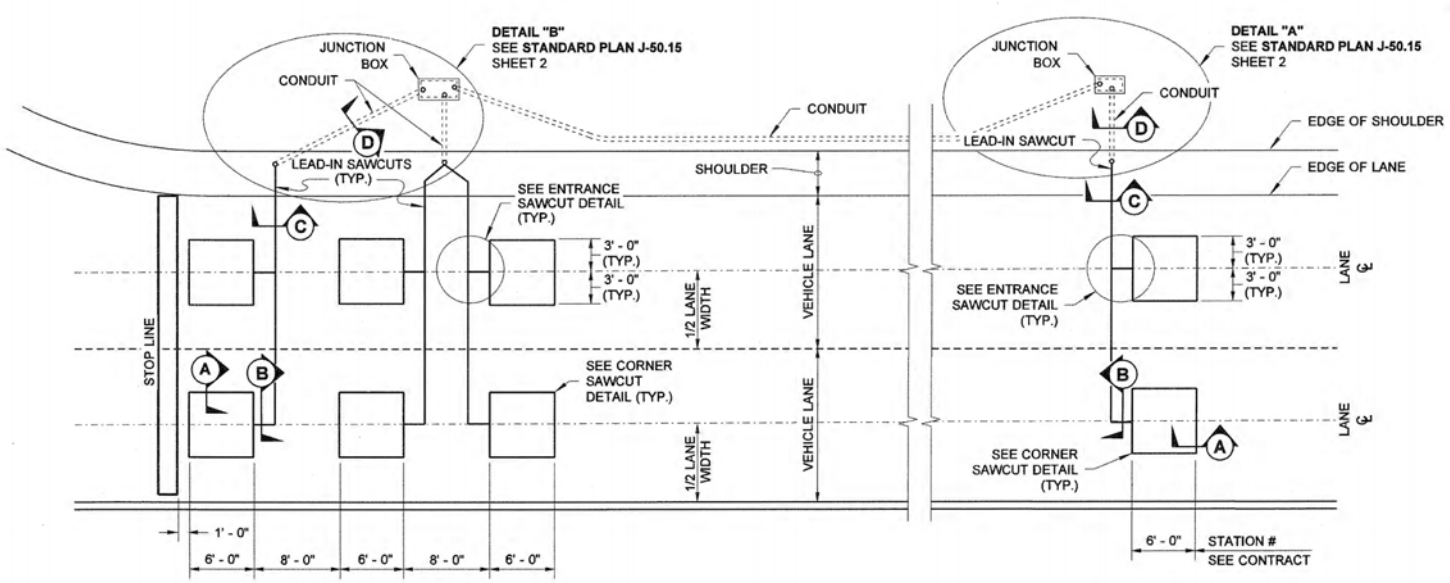

TYPE 2 STOP LINE LOOPS

PLAN

TYPE 2 ADVANCE LOOPS

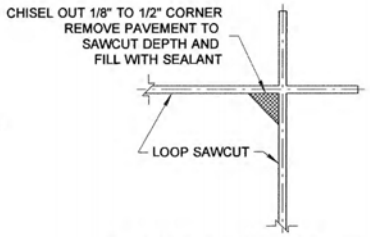

CORNER SAWCUT DETAIL

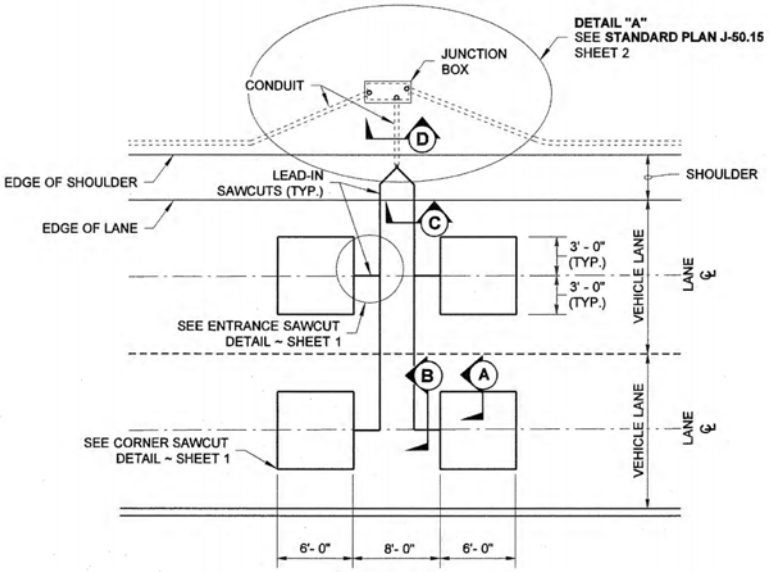

TYPE 2 SAMPLING LOOPS

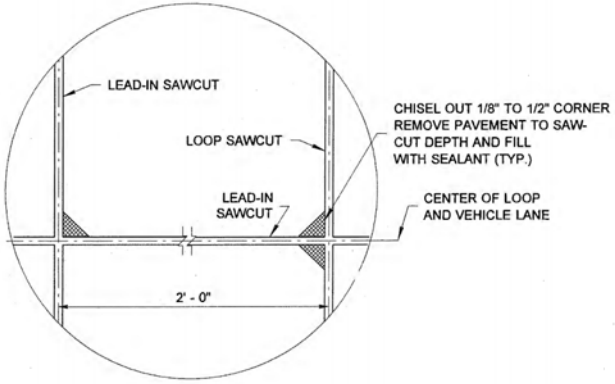

ENTRANCE SAWCUT DETAIL

NOTES

1. For Installation Notes and Details see **Standard Plan J-50.15.**
2. For Sections A, B, C, and D, see **Standard Plan J-50.15.**
3. All of the loop lead-in wires shall return to the Junction Box.
4. For Splice Detail, see **Standard Plan J-50.15.**
5. For additional Induction Loop details, see **Standard Plan J-50.15.**

TYPE 2 INDUCTION LOOP

STANDARD PLAN J-50.11-00

SHEET 1 OF 2 SHEETS

APPROVED FOR PUBLICATION

STATE DESIGN ENGINEER — DATE 6/3/11

Washington State Department of Transportation

DRAWN BY: FERN LIDDELL

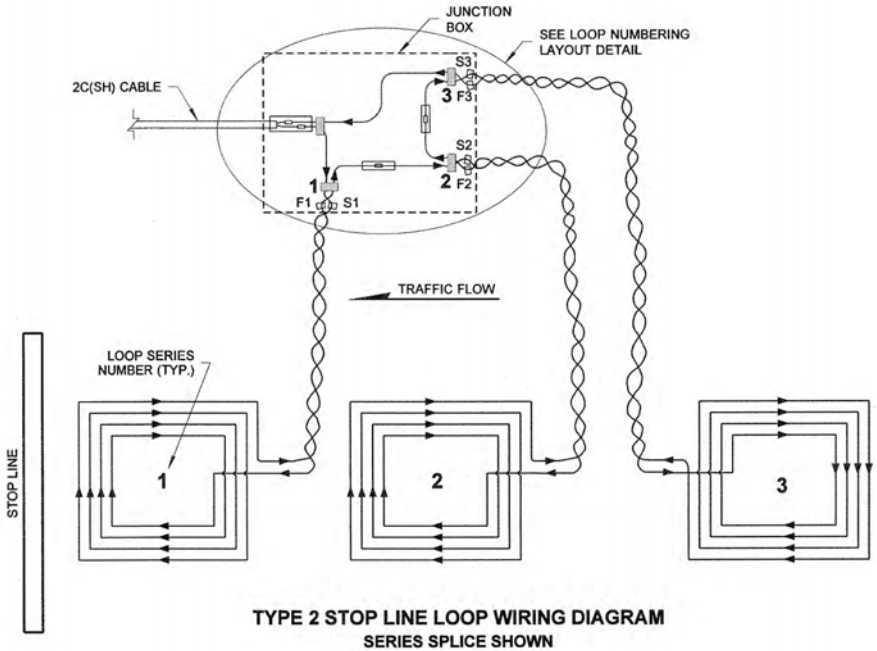

TYPE 2 STOP LINE LOOP WIRING DIAGRAM
SERIES SPLICE SHOWN

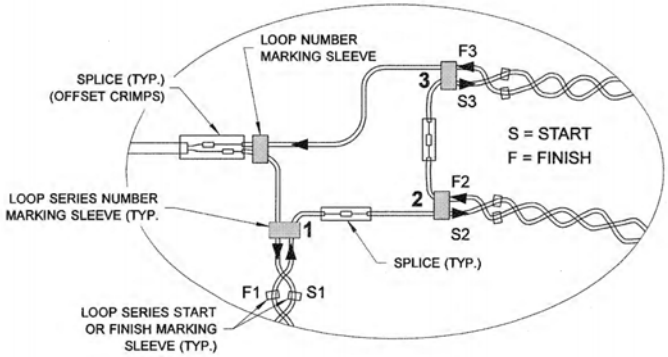

LOOP NUMBERING LAYOUT DETAIL

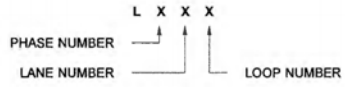

LOOP NUMBER MARKING DETAIL

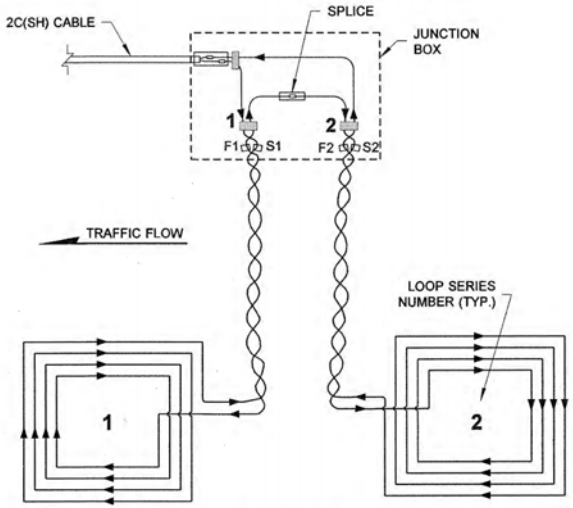

TYPE 2 SAMPLING LOOP WIRING DIAGRAM
SERIES SPLICE SHOWN

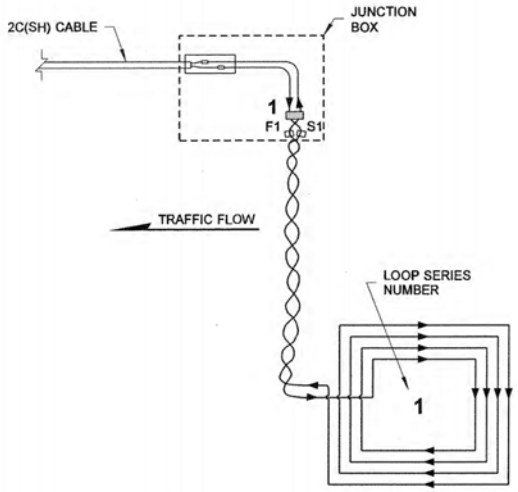

TYPE 2 ADVANCE LOOP WIRING DIAGRAM

TYPE 2 INDUCTION LOOP

STANDARD PLAN J-50.11-00

SHEET 2 OF 2 SHEETS

APPROVED FOR PUBLICATION

6/3/11

STATE DESIGN ENGINEER — DATE

Washington State Department of Transportation

DRAWN BY: FERN LIDDELL

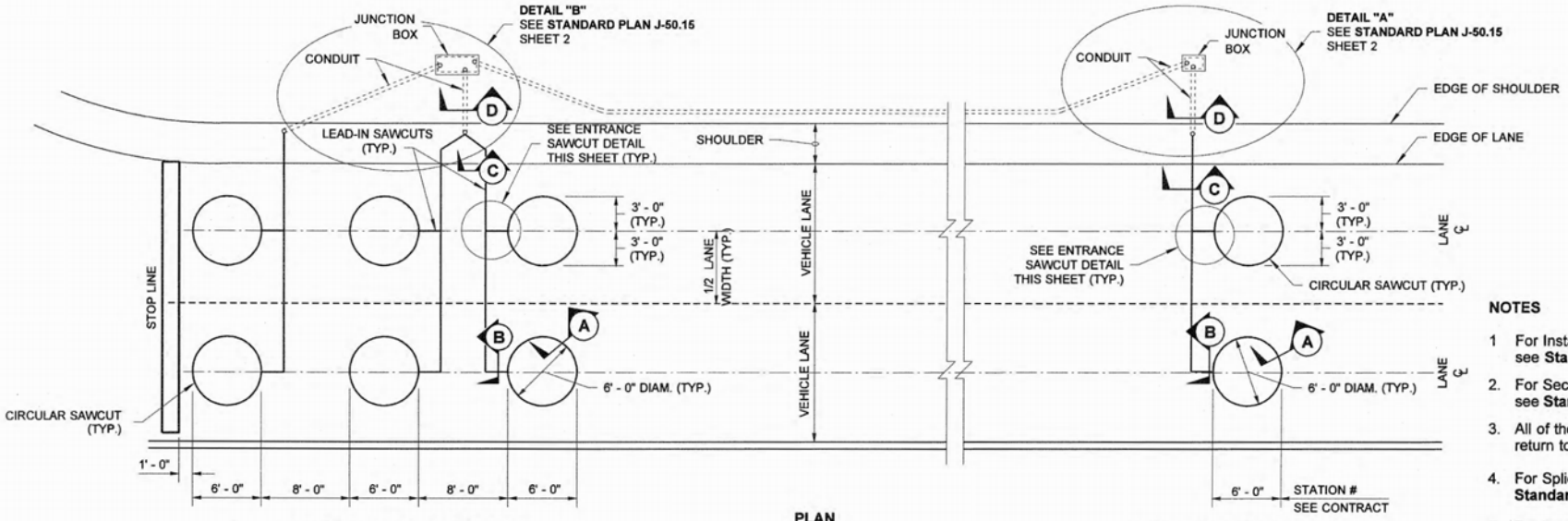

PLAN

TYPE 3 STOP LINE LOOPS

TYPE 3 ADVANCE LOOPS

NOTES

1. For Installation Notes and Details see **Standard Plan J-50.15.**
2. For Sections A, B, C, and D, see **Standard Plan J-50.15.**
3. All of the loop lead-in wires shall return to the Junction Box.
4. For Splice Detail, see **Standard Plan J-50.15.**
5. For Loop numbering Layout Details, see **sheet 3.**
6. For additional Induction Loop Details, see **Standard Plan J-50.15.**

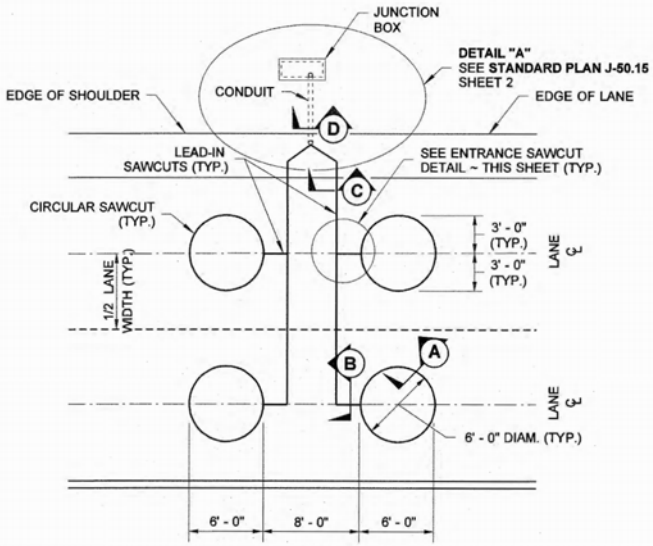

PLAN

TYPE 3 SAMPLING LOOPS

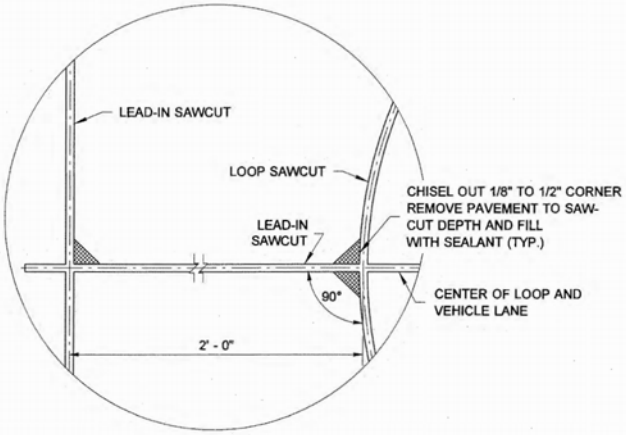

ENTRANCE SAWCUT DETAIL

TYPE 3 INDUCTION LOOP

STANDARD PLAN J-50.12-00

SHEET 1 OF 3 SHEETS

APPROVED FOR PUBLICATION

STATE DESIGN ENGINEER — DATE 6/3/11

Washington State Department of Transportation

DRAWN BY: FERN LIDDELL

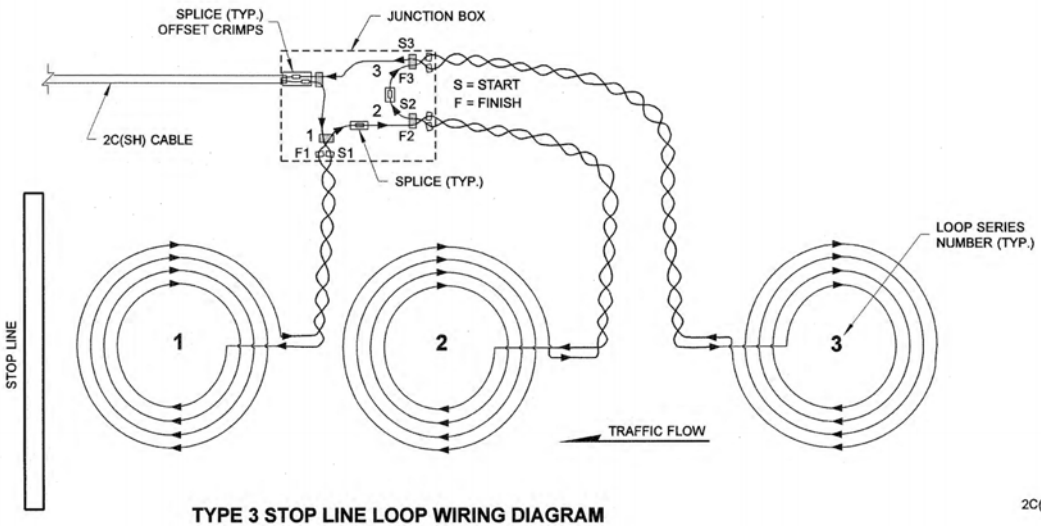

TYPE 3 STOP LINE LOOP WIRING DIAGRAM

SERIES SPLICE SHOWN

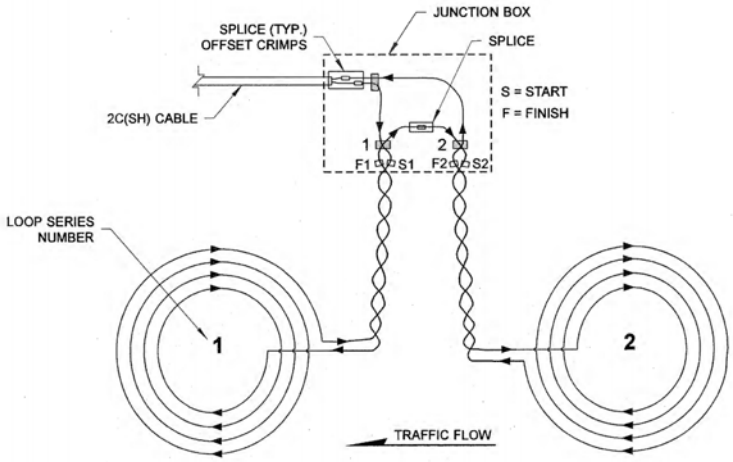

TYPE 3 SAMPLING LOOP WIRING DIAGRAM

SERIES SPLICE SHOWN

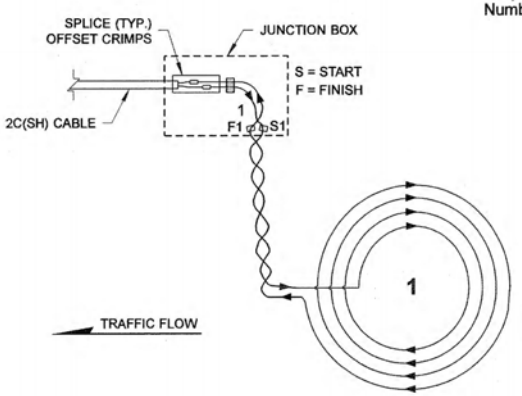

TYPE 3 ADVANCE
LOOP WIRING DIAGRAM

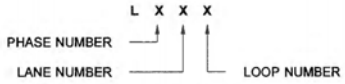

LOOP NUMBER MARKING DETAIL

NOTES

Loop numbering layout will be similar to Loop Numbering Layout Detail, Sheet 3

TYPE 3 INDUCTION LOOP

STANDARD PLAN J-50.12-00

SHEET 2 OF 3 SHEETS

APPROVED FOR PUBLICATION

STATE DESIGN ENGINEER — DATE 6/3/11

Washington State Department of Transportation

DRAWN BY: FERN LIDDELL

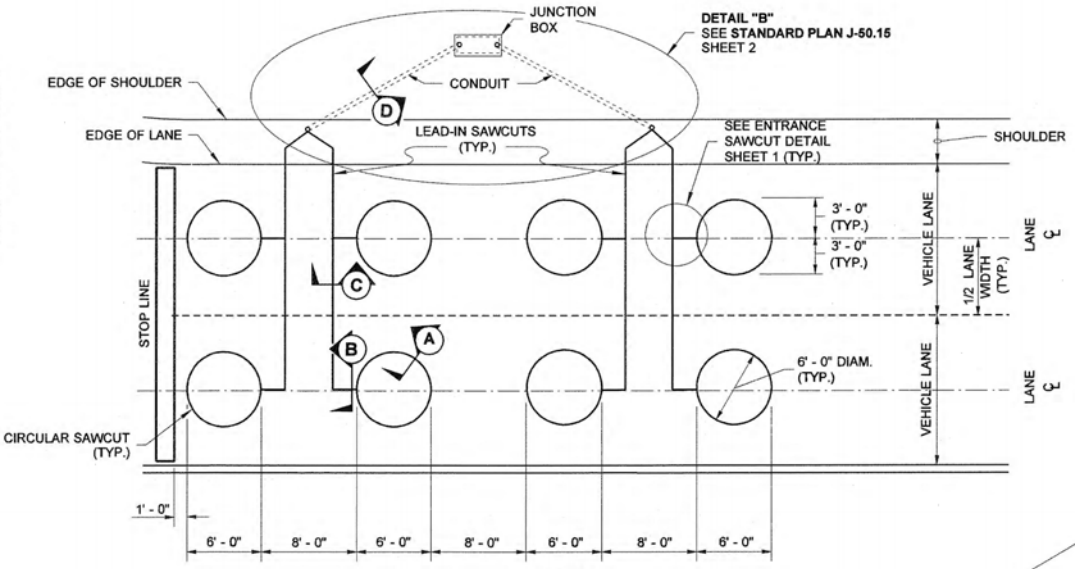

PLAN

TYPE 3A STOP LINE LOOPS

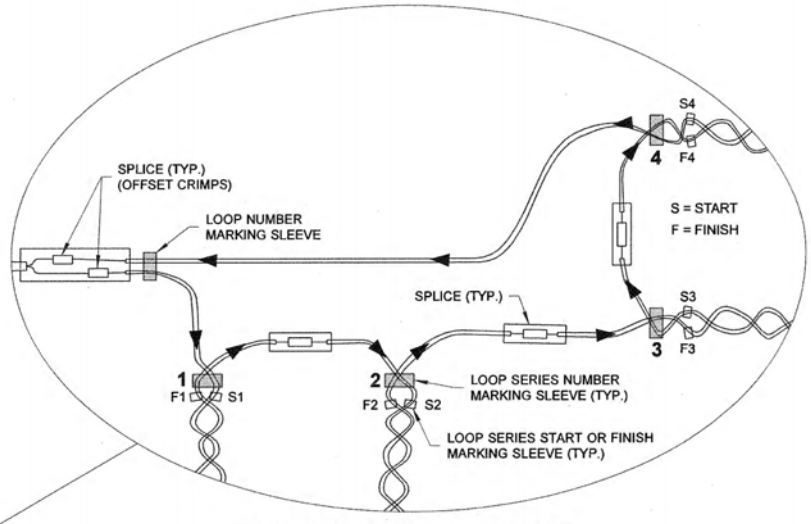

LOOP NUMBERING LAYOUT DETAIL

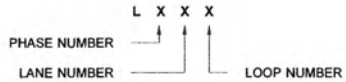

LOOP NUMBER MARKING DETAIL

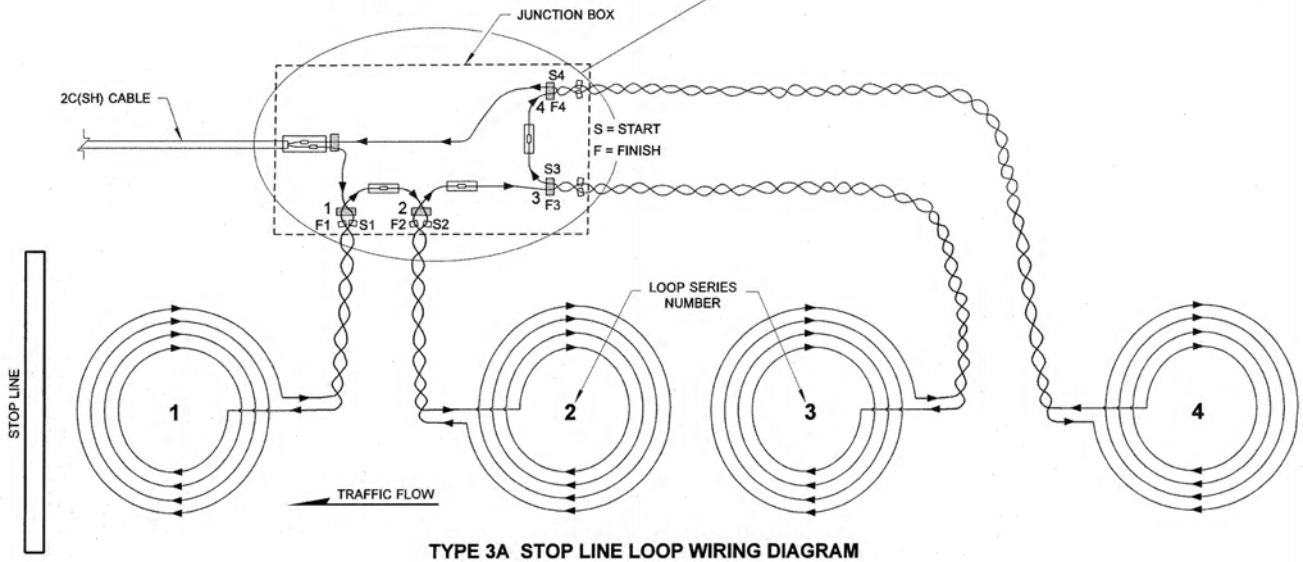

TYPE 3A STOP LINE LOOP WIRING DIAGRAM

SERIES SPLICE SHOWN

TYPE 3 INDUCTION LOOP

STANDARD PLAN J-50.12-00

SHEET 3 OF 3 SHEETS

APPROVED FOR PUBLICATION

STATE DESIGN ENGINEER — DATE 6/3/11

Washington State Department of Transportation

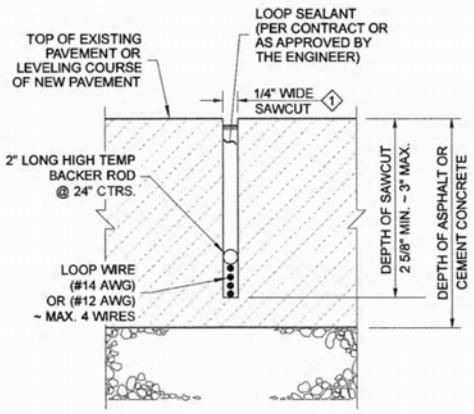

SECTION A

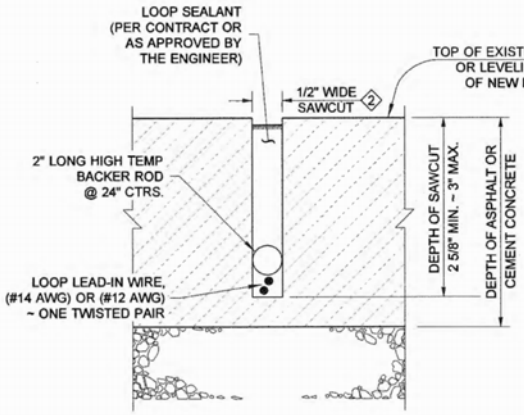

SECTION B

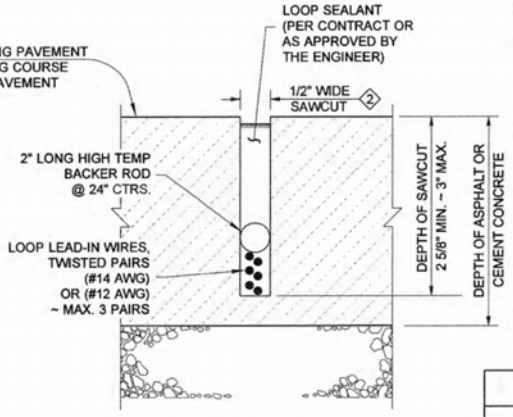

SECTION C

NOTES

1. Fill the conduit trench to the bottom of the existing or new surfacing with CSTC, sand or controlled density fill. See **Standard Specifications Section 2-09.3(1)E**.
2. Minor Regional variations are allowed in the soft pocket closure. Consult with the Engineer or see the Contract for additional requirements.
3. Conductors shall be snug to the bottom of the sawcut. High temperature backer rod shall be snug to the conductors and sides of cut.
4. Fill the sealant to within 1/8" to 3/16" from top of saw cut.
5. See **Standard Plan J-40.10** for additional Junction Box details.

PVC CONDUIT SIZING TABLE					
LOOP LEAD PAIRS	1 - 4	5 - 10	11 - 16	17 - 22	23 - 28
NUMBER AND SIZE OF CONDUITS	1 - 2"	2 - 2"	3 - 2"	4 - 2"	3 - 3"

1 ADD 1/16" TO THE SAWCUT FOR IMSA 51 - 7 CONDUCTORS

2 ADD 1/8" TO THE SAWCUT FOR IMSA 51 - 7 CONDUCTORS

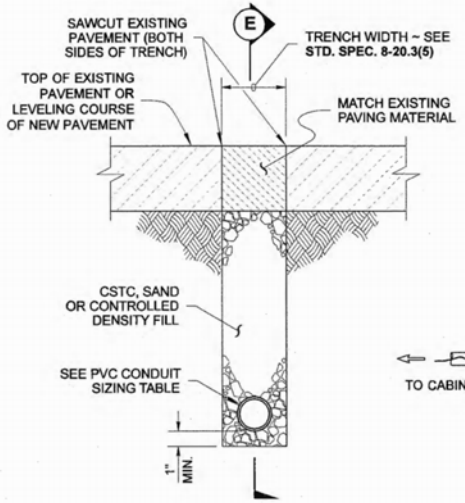

SECTION D

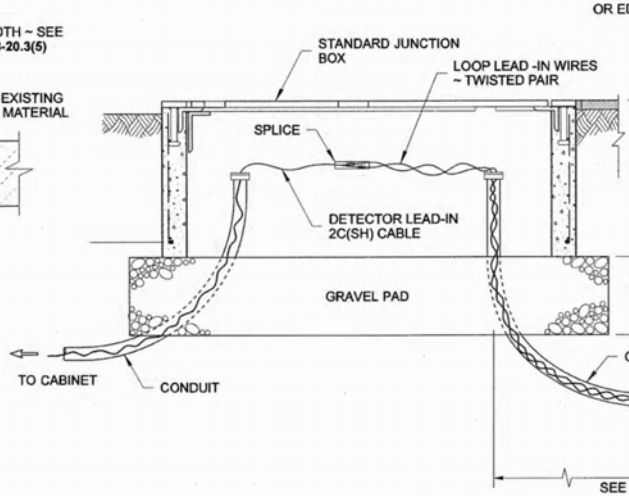

JUNCTION BOX PLACEMENT

SEE NOTE 5

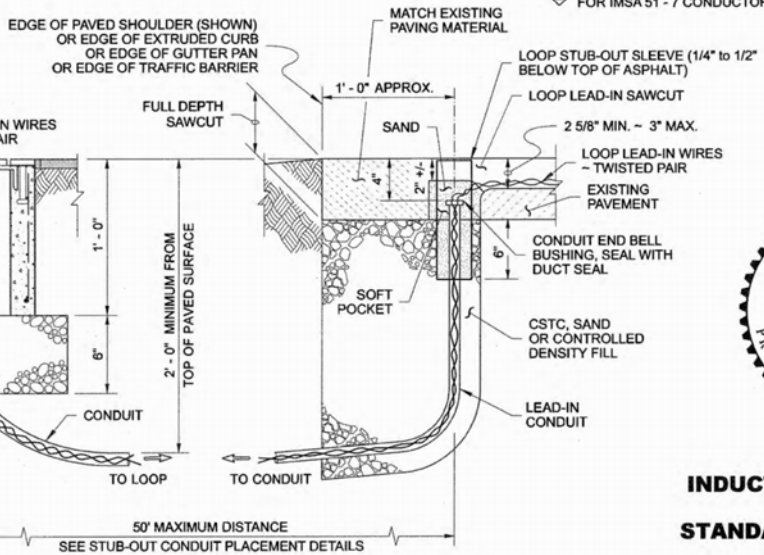

LEAD-IN CONDUIT SECTION

MAX. 50 FT POCKET SECTION

SECTION E

INDUCTION LOOP DETAILS

STANDARD PLAN J-50.15-00

SHEET 1 OF 3 SHEETS

APPROVED FOR PUBLICATION

STATE DESIGN ENGINEER — DATE 6/3/11

Washington State Department of Transportation

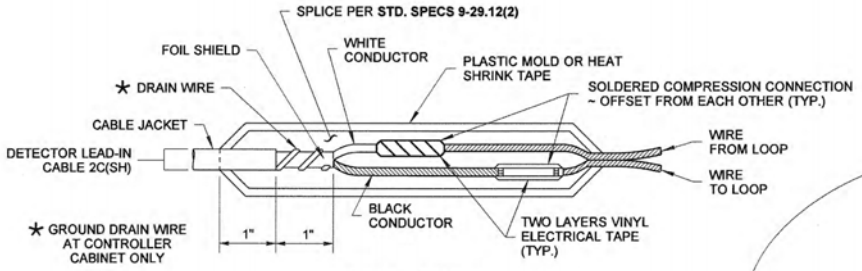

SPLICE DETAIL

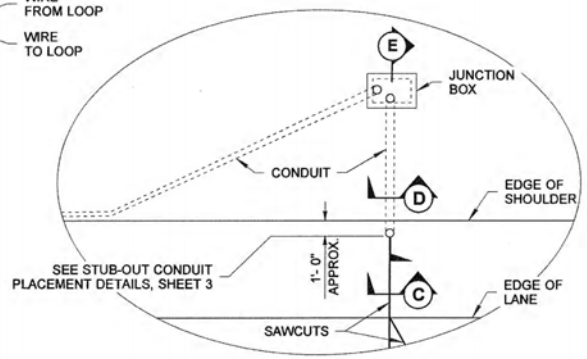

DETAIL "A"

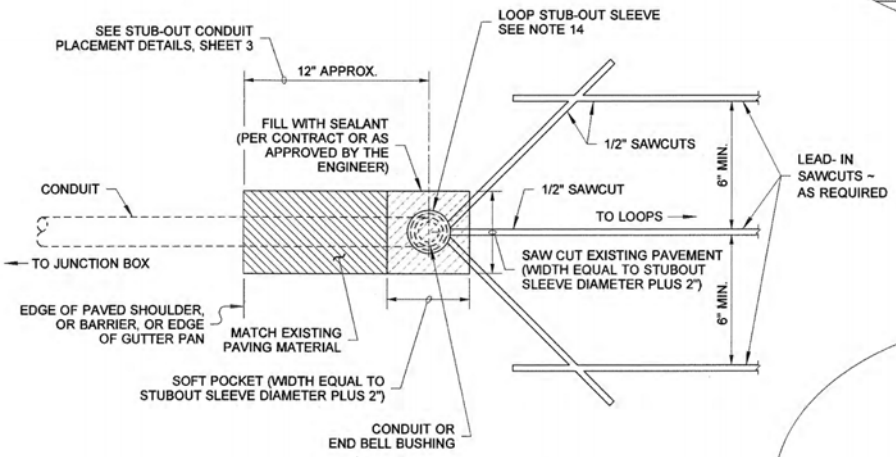

PLAN

SAWCUT AND CONDUIT CONNECTION

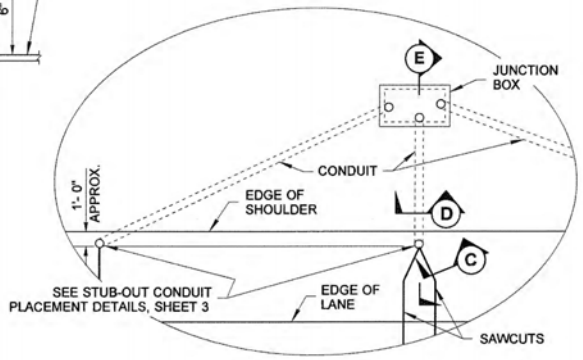

DETAIL "B"

LOOP INSTALLATION NOTES

1. Install the Junction Box and the stub-out conduit with PVC sleeve. Conduit for the loop stub-out shall be as required in the conduit size table shown on sheet 1 of this set.
2. Lay out loops and loop lead-ins to miss cracks/joints in road, when possible. Maintain 18" minimum clearance from manholes and valve boxes.
3. The opening around the loop stub shall be patched with matching paving material if opened larger than PVC sleeve + 2".
4. Sawcut the loop slots and the lead-in slots. Wash/dry cuts. File edges to remove burr of all saw-cuts into stub out sleeve.
5. Lay out the loop wire starting at the Junction Box, allowing 5' minimum slack.
6. Install the wire in the loop slot as shown.
7. Finish laying out the wire at the Junction Box and identify the leads with the loop number, the "S" for start and the "F" for the finish, the loop series number, and the loop lead-in conductor number.
8. Twist each pair of the lead-in wires a minimum of two times per foot each foot, from the loop to the Junction Box. Reverse the direction of the twist for each successive pair installed. Seal loops/sawcuts.
9. Construct a supplemental splice containing any series loop connections in the adjacent junction box as required in the plans. Supplemental splices are subject to the same requirements shown for the loop lead-in and the shielded cable splice.
10. Splice the loop lead-ins to the shielded cable as noted in the Contract.
11. All loop circuits shall be tested per **Standard Specifications 8-20.3(14)D** once installation is complete.
12. Existing stubouts shall be upgraded as necessary to conform to the conduit size table shown on sheet 1.
13. All loop lead-in sawcuts parallel to lane edge shall be at least 12" from edge of pavement and within six inches outside of lane or fog line when possible. Maintain 12" separation between parallel cuts or joints.
14. The loop stub-out sleeve shall have an inside diameter 1" larger than the outside diameter of the End Bell Bushing. Plug conduit and fill sleeve with sand untill loops are installed to keep out Hot Asphalt during paving operations.

INDUCTION LOOP DETAILS

STANDARD PLAN J-50.15-00

SHEET 2 OF 3 SHEETS

APPROVED FOR PUBLICATION

STATE DESIGN ENGINEER — DATE 6/3/11

Washington State Department of Transportation

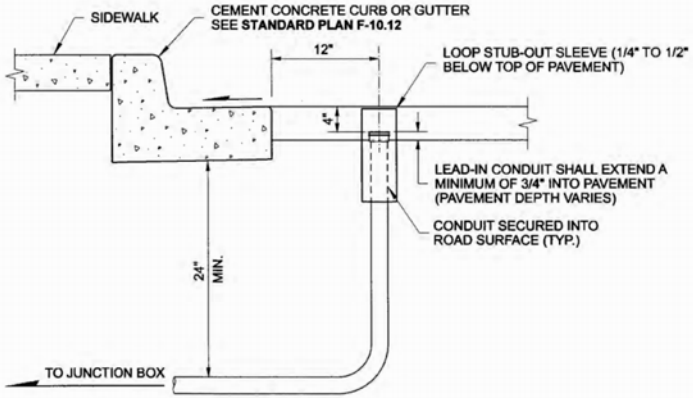

STUB-OUT DETAIL
WITH CEMENT CONCRETE CURB OR GUTTER

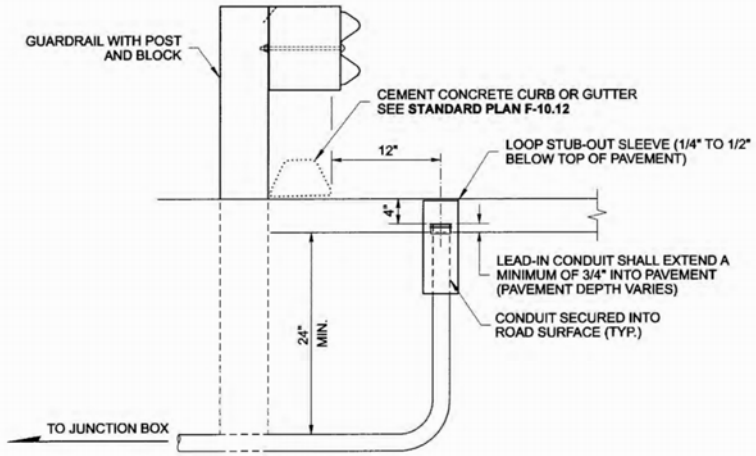

STUB-OUT DETAIL
WITH GUARDRAIL AND CURB

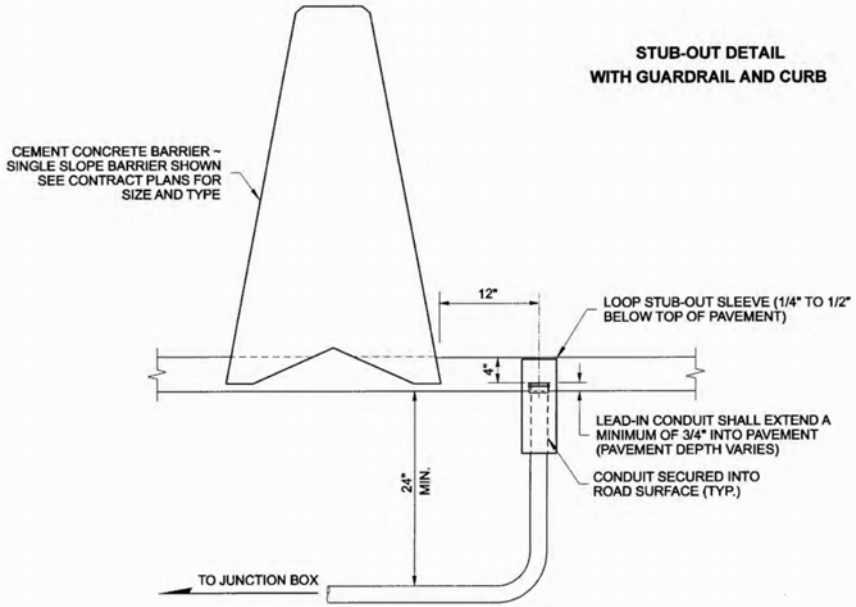

STUB-OUT DETAIL WITH
CEMENT CONCRETE BARRIER

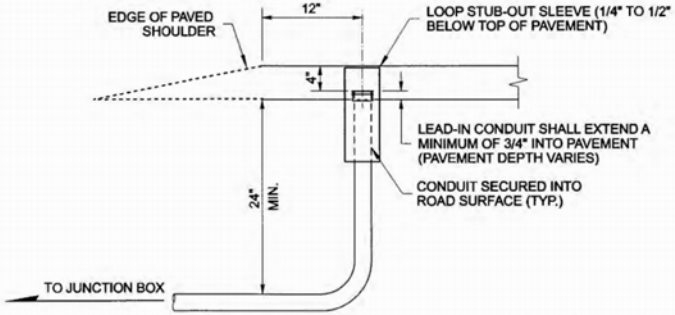

STUB-OUT DETAIL
WITH ROADWAY

STUBOUT CONDUIT PLACEMENT DETAILS

INDUCTION LOOP DETAILS

STANDARD PLAN J-50.15-00

SHEET 3 OF 3 SHEETS

APPROVED FOR PUBLICATION

STATE DESIGN ENGINEER — DATE 6/3/11

Washington State Department of Transportation

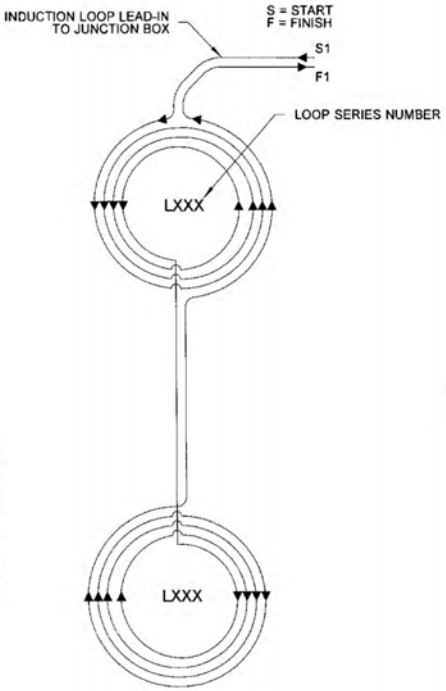

WIRING DIAGRAM FOR PREFORMED INDUCTION LOOP 2-LOOP ARRAY

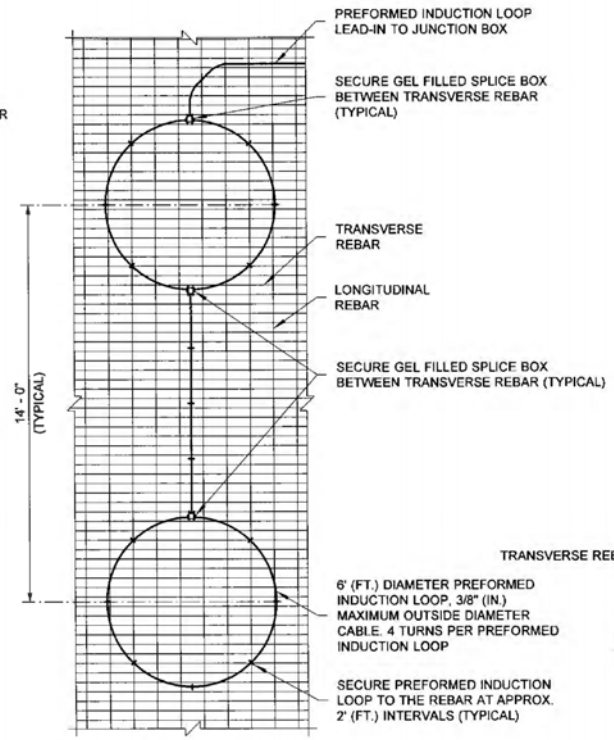

PLAN VIEW

NOTES

1. Installation of signal detection loops in the bridge deck shall be cast-in-place and installation by saw cutting an existing bridge deck shall not be allowed. **This plan is intented for new construction only (not allowed for existing structures).**
2. For Supplemental Splice in adjacent junction box, see Splice Detail, per **Standard Plan J-50.15.**
3. Preformed loops shall conform to the layouts, numbering details, marking requirements, and wiring diagrams of **Standard Plan J-50.12** for the number and types of loops shown in the Contract Plans.
4. Loops shall be tested immediately prior to pouring concrete, per **Standard Specification 8-20.3(14)D.**
5. Layout Preformed loops and loop lead-ins to maintain 1' (ft.) clearance from joints.
6. Construct a supplemental splice containing any series loop connections in adjacent Junction Box as required in the Plans. Supplemental splices are subject to the same requirements shown for the loop lead-in and the shielded cable splice, as shown in **Standard Plan J-50.12**.
7. Barrier Junction Box ~ 8" × 8" × 18" NEMA 4X in stationary-form barrier, adjustable NEMA 3R in slip-form barrier. (Junction Box can be recessed up to 1/8".) See **Standard Plan J-40.36 or J-40.37**.
8. For installation of Junction Box in the sidewalk, see **Standard Plan J-40.40.**

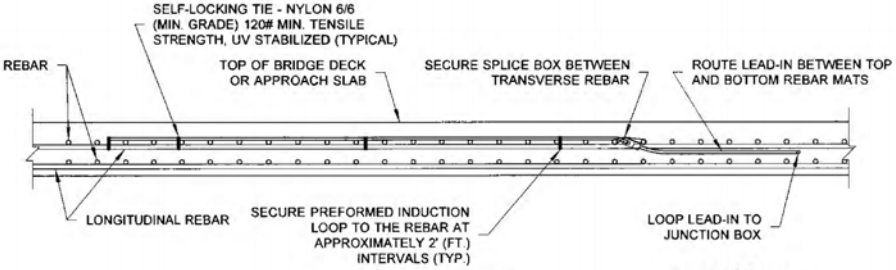

ELEVATION VIEW

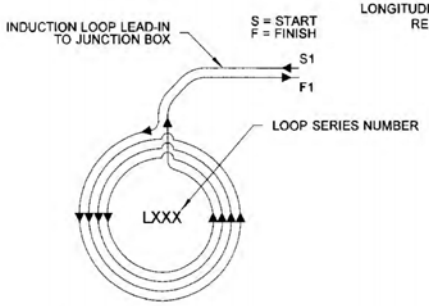

WIRING DIAGRAM FOR PREFORMED INDUCTION LOOP

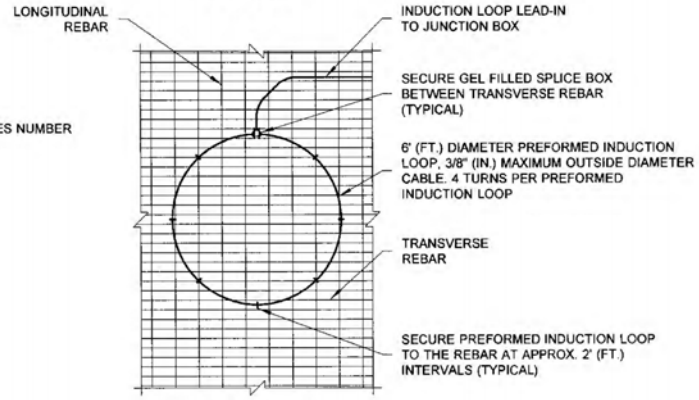

PLAN VIEW

DRAWN BY: BILL BERENS

THEODORE JOSEPH BAILEY
STATE OF WASHINGTON
39820
REGISTERED
PROFESSIONAL ENGINEER

3/11/2013

PREFORMED LOOP INSTALLATION DETAILS FOR NEW BRIDGE DECKS

STANDARD PLAN J-50.16-01

SHEET 1 OF 2 SHEETS

APPROVED FOR PUBLICATION

STATE DESIGN ENGINEER — DATE 3/22/13

Washington State Department of Transportation

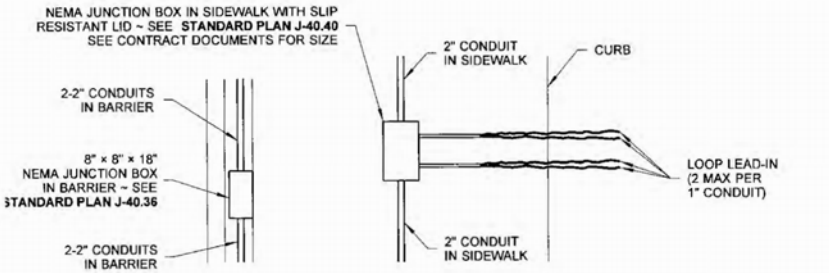

PLAN VIEW

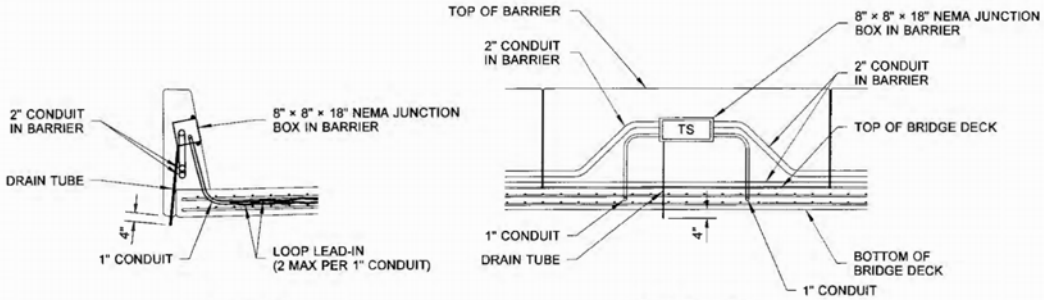

SECTION

ELEVATION VIEW

SINGLE SLOPE TRAFFIC BARRIER

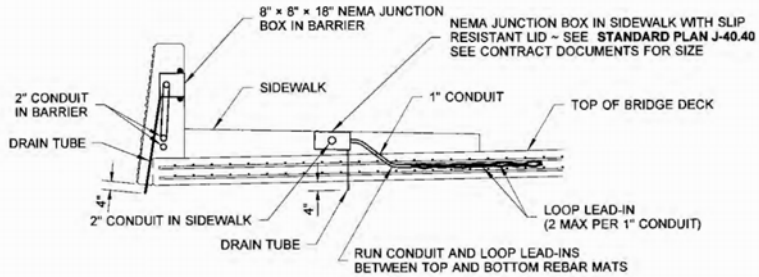

SECTION

PEDESTRIAN BARRIER

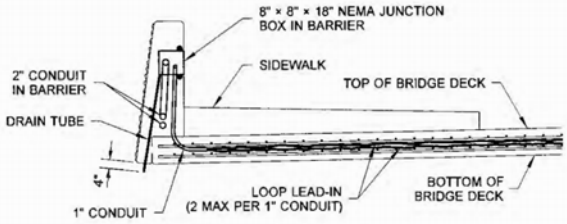

SECTION

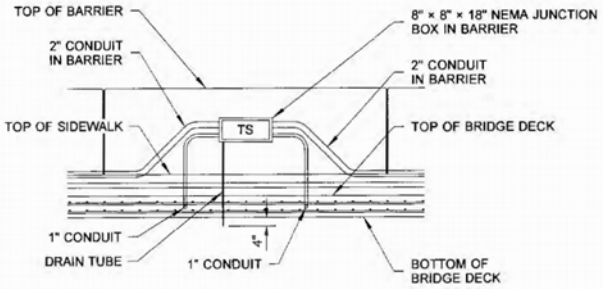

ELEVATION VIEW

PEDESTRIAN BARRIER

DRAWN BY: BILL BERENS

THEODORE JOSEPH BAILEY
STATE OF WASHINGTON
39820
REGISTERED
PROFESSIONAL ENGINEER

3/11/2013

PREFORMED LOOP INSTALLATION DETAILS FOR NEW BRIDGE DECKS

STANDARD PLAN J-50.16-01

SHEET 2 OF 2 SHEETS

APPROVED FOR PUBLICATION

STATE DESIGN ENGINEER — DATE 3/22/13

Washington State Department of Transportation

DRAWN BY: FERN LIDDELL

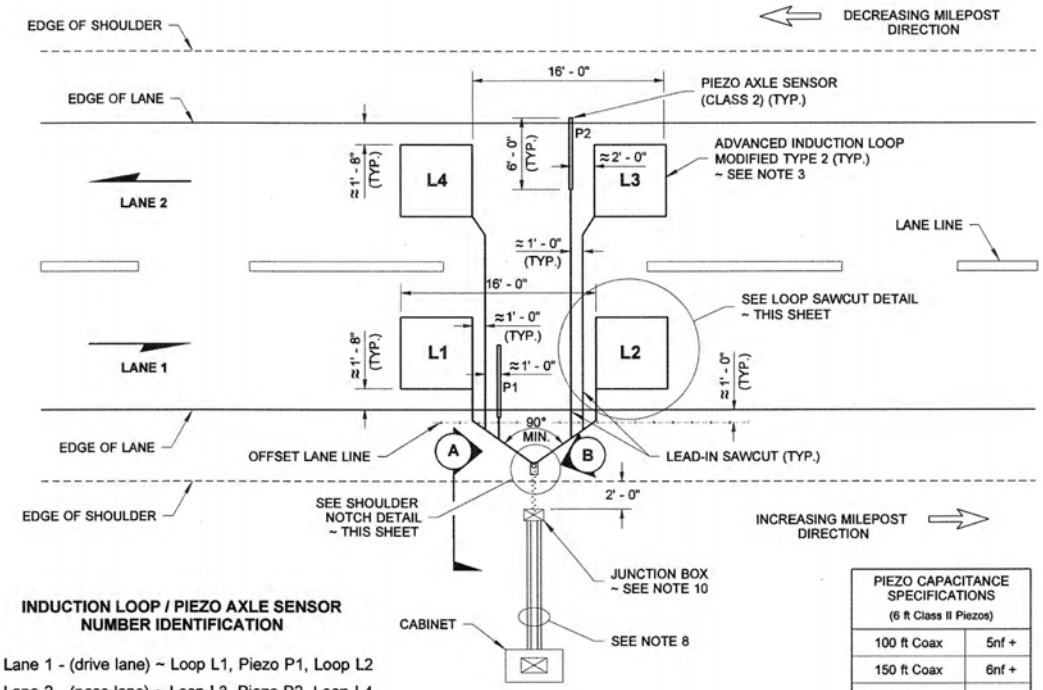

INDUCTION LOOP / PIEZO AXLE SENSOR NUMBER IDENTIFICATION

Lane 1 - (drive lane) ~ Loop L1, Piezo P1, Loop L2

Lane 2 - (pass lane) ~ Loop L3, Piezo P2, Loop L4

PIEZO CAPACITANCE SPECIFICATIONS (6 ft Class II Piezos)	
100 ft Coax	5nf +
150 ft Coax	6nf +
200 ft Coax	7nf +
250 ft Coax	8nf +

PLAN VIEW

TYPICAL 2 LANE PTR LAYOUT

NOTES

1. See **Standard Plan J-50.30** for Piezo axle sensor General Installation instructions, and Modified Type 2 Loop wiring details.
2. The contractor shall notify the Statewide Travel and Collision Data Office (STCDO) (formerlyTDO) a minimum of five working days prior to the scheduled site installation. An inspector from the WSDOT STCDO shall be on site for all phases of installation.
3. The loop inductance of two loops within the same lane shall be within 20 micro henries of each other. all piezo ohms readings shall be O\L from shield to center conductor. See piezo specifications for piezo capacitance readings.
4. The loops and axle sensors shall be cut in the final lift of asphalt after lane striping is completed. All PTR loops shall be spaced @16 ft. leading edge to leading edge.
5. For concrete pavement lanes with asphalt shoulders, install all of the piezo sensors and splices in the concrete lane. Also, for concrete lanes, install the loops 4" and 6" away from the expansion joints.
6. The shoulder notch length along the roadway shall be 4" or the conduit diameter plus 2" or whichever is larger. The shoulder notch width perpendicular to the roadway shall be the conduit size plus 1/4".
7. After all sensor leads are installed, seal the end of the conduit with conduit sealant. Use asphalt cold-patch to fill notch unless otherwise specified in the contract.
8. Use Schedule 40 PVC conduit from the Junction box to the Cabinet. Where there are 2 to 4 lanes, use one 1 1/4" min. conduit for each direction of travel. Where there are 5 lanes in either direction of travel, use one 2" min. conduit in each direction. Where there are 6 or more lanes in either directon, use one 3" min. conduit for each direction.
9. Use Schedule 80 PVC, HDPE, or steel conduit under the roadway. For conduit installation see **Standard Specification 8-20.3(5).**
10. Junction boxes installed in the paved shoulder or median shall be a Heavy Duty Junction box. If box is installed in unpaved shoulder, use type 1 or 2. See **Standard Plan J-40.10** for size and type. See **Standard Specification 9.29.2(1)B.** for further information.
11. All loop wire, loop leads, and piezo leads shall be labeled with colored electrical tape at all Junction Boxes, Pull Boxes and Cabinets, according to the Color Code Identification Chart. For Wire Color Code Detail see **Standard Plan J-50.30.**
12. Cabinet can be placed on either side of road depending on terrain/slope, etc. It does not have to be placed on increasing milepost side of the roadway.
13. For 6 - lane layouts and above, see Contract.

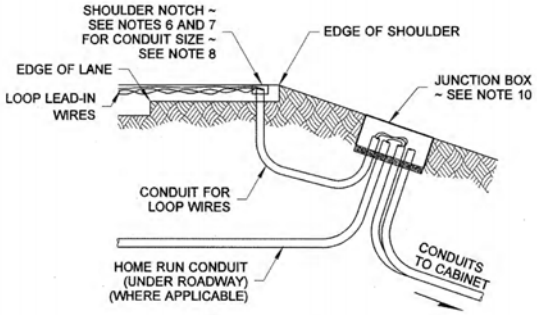

SECTION (A)

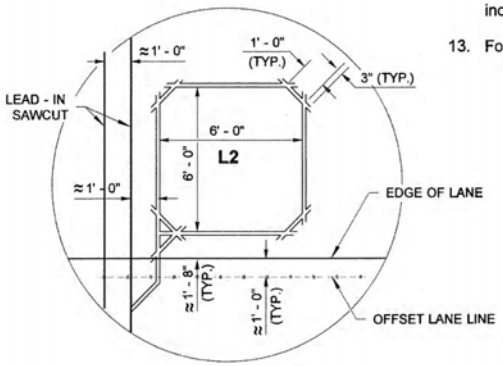

LOOP SAW CUT DETAIL

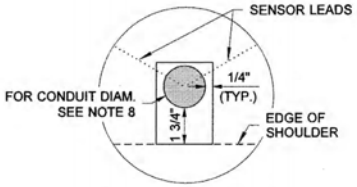

SHOULDER NOTCH DETAIL (B)

PERMANENT TRAFFIC RECORDER INSTALLATIONS

STANDARD PLAN J-50.20-00

SHEET 1 OF 3 SHEETS

APPROVED FOR PUBLICATION

STATE DESIGN ENGINEER — DATE 6/3/11

Washington State Department of Transportation

DRAWN BY: FERN LIDDELL

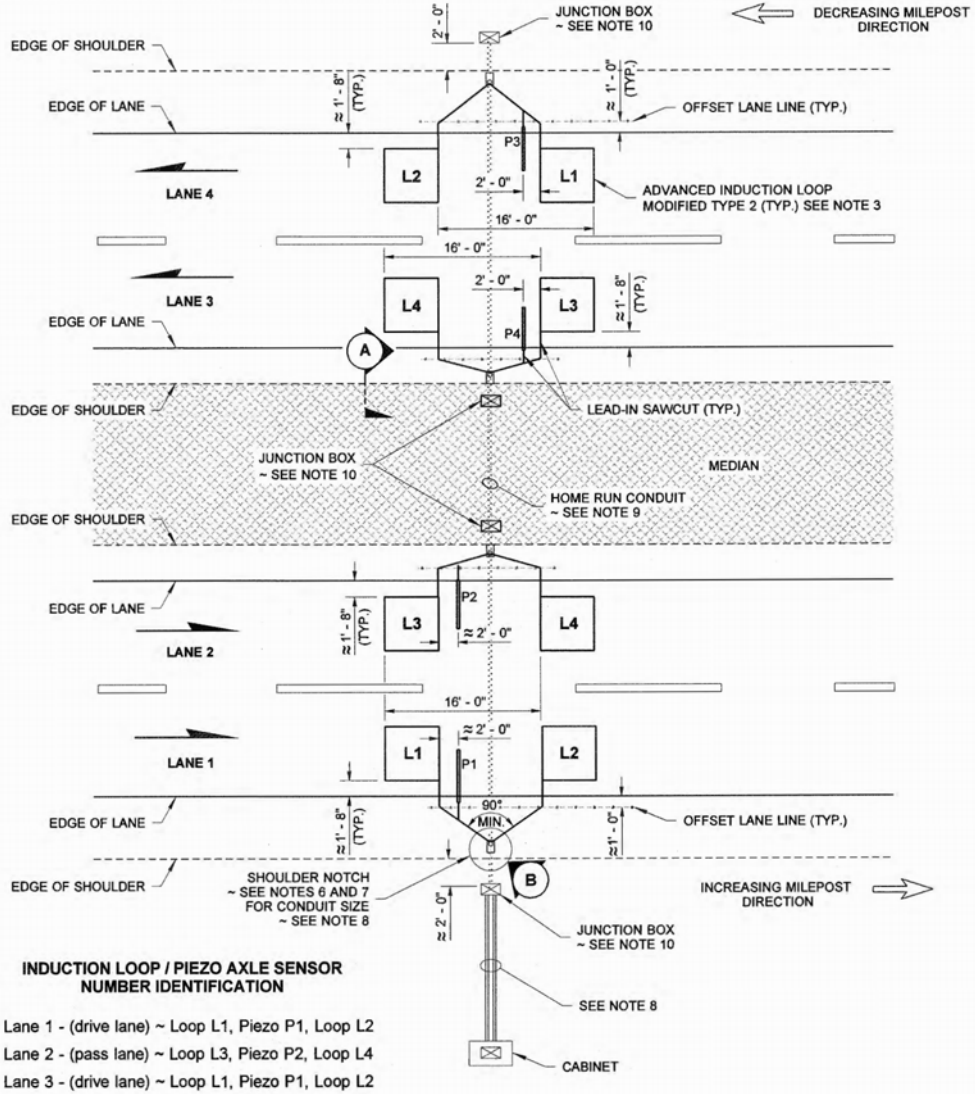

INDUCTION LOOP / PIEZO AXLE SENSOR NUMBER IDENTIFICATION

Lane 1 - (drive lane) ~ Loop L1, Piezo P1, Loop L2
Lane 2 - (pass lane) ~ Loop L3, Piezo P2, Loop L4
Lane 3 - (drive lane) ~ Loop L1, Piezo P1, Loop L2
Lane 4 - (pass lane) ~ Loop L3, Piezo P2, Loop L4

PLAN VIEW

TYPICAL 4 LANE PTR LAYOUT WITH MEDIAN

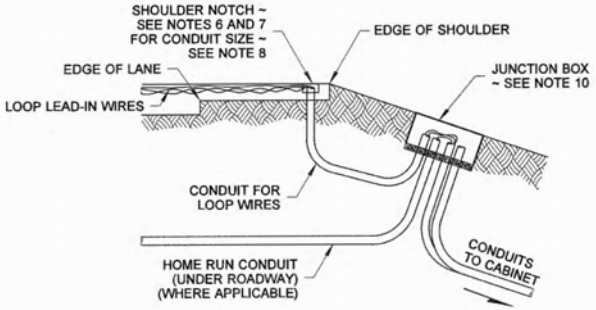

SECTION (A)

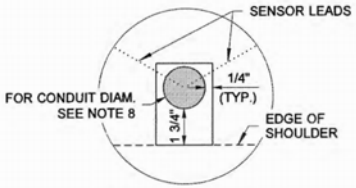

SHOULDER NOTCH

DETAIL (B)

PERMANENT TRAFFIC RECORDER INSTALLATIONS

STANDARD PLAN J-50.20-00

SHEET 2 OF 3 SHEETS

APPROVED FOR PUBLICATION

STATE DESIGN ENGINEER — DATE 6/3/11

Washington State Department of Transportation

DRAWN BY: FERN LIDDELL

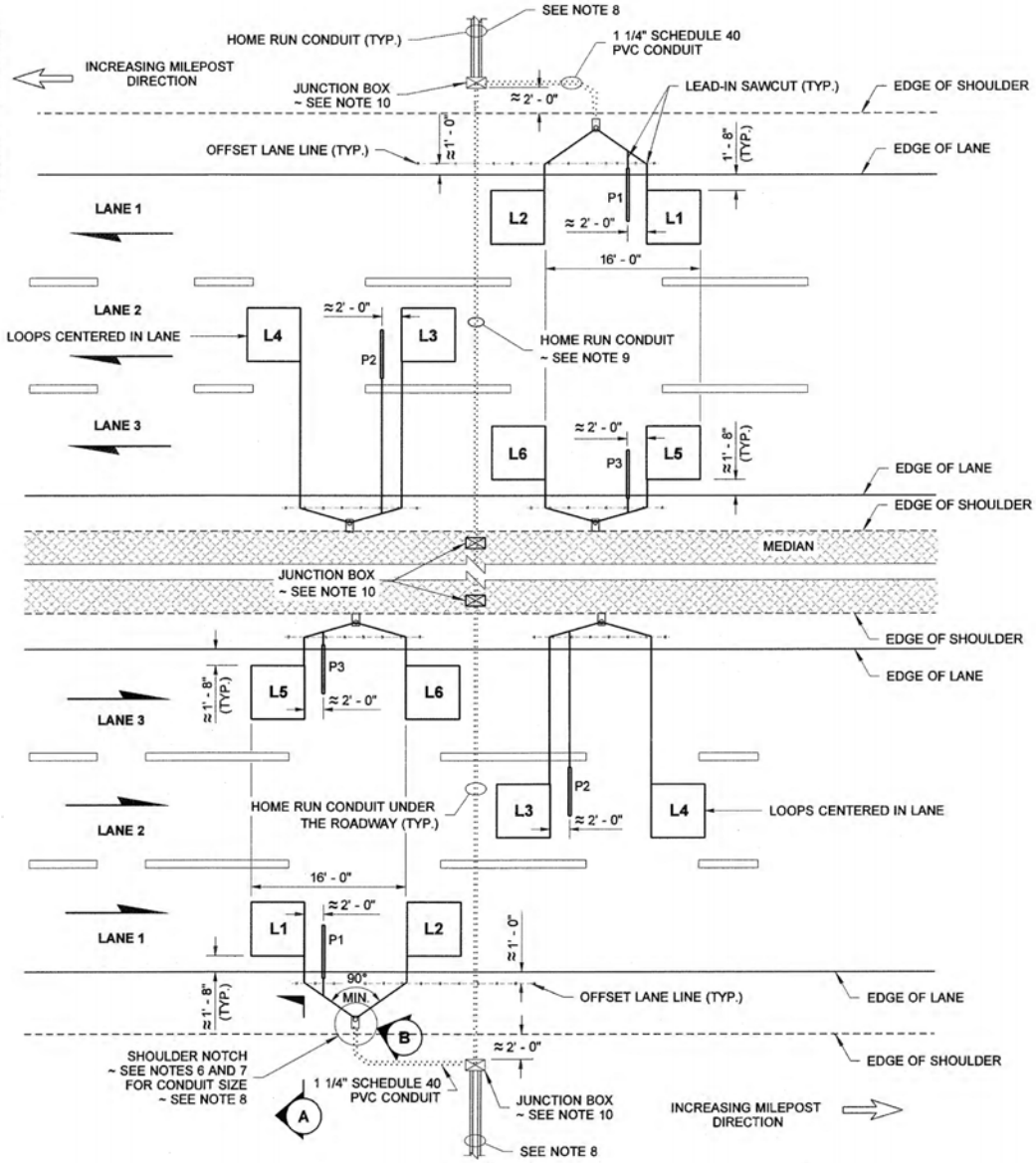

PLAN VIEW

TYPICAL 6 LANE PTR LAYOUT WITH MEDIAN

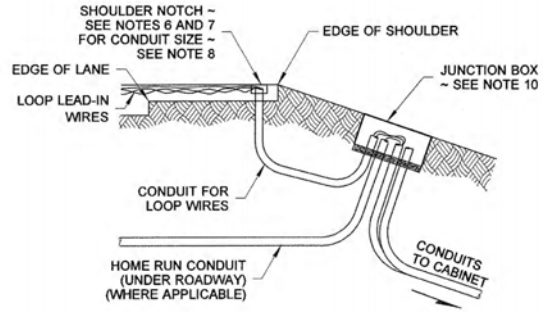

SECTION (A)

INDUCTION LOOP / PIEZO AXLE SENSOR NUMBER IDENTIFICATION

Lane 1 - (drive lane) ~ Loop L1, Piezo P1, Loop L6
Lane 2 - (center lane) ~ Loop L3, Piezo P2, Loop L4
Lane 3 - (drive lane) ~ Loop L1, Piezo P1, Loop L2

Lane 1 - (drive lane) ~ Loop L1, Piezo P1, Loop L2
Lane 2 - (center lane) ~ Loop L3, Piezo P2, Loop L4
Lane 3 - (center lane) ~ Loop L1, Piezo P1, Loop L6

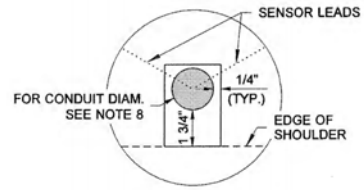

SHOULDER NOTCH

DETAIL (B)

PERMANENT TRAFFIC RECORDER INSTALLATIONS

STANDARD PLAN J-50.20-00

SHEET 3 OF 3 SHEETS

APPROVED FOR PUBLICATION

STATE DESIGN ENGINEER — DATE 6/2/11

Washington State Department of Transportation

DRAWN BY: FERN LIDDELL

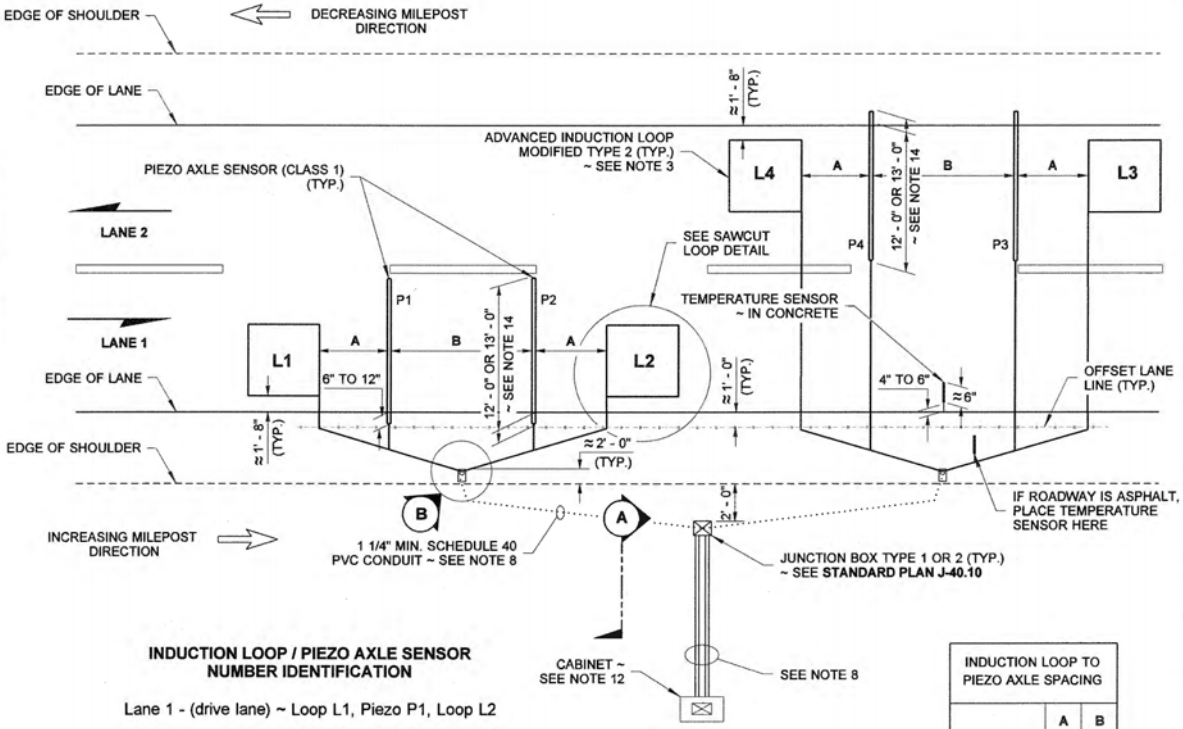

INDUCTION LOOP / PIEZO AXLE SENSOR NUMBER IDENTIFICATION

Lane 1 - (drive lane) ~ Loop L1, Piezo P1, Loop L2

Lane 2 - (pass lane) ~ Loop L3, Piezo P2, Loop L4

PLAN VIEW

TYPICAL 2 - LANE WIM LAYOUT

INDUCTION LOOP TO PIEZO AXLE SPACING		
	A	B
RURAL	6'	12'
URBAN	2'	10'

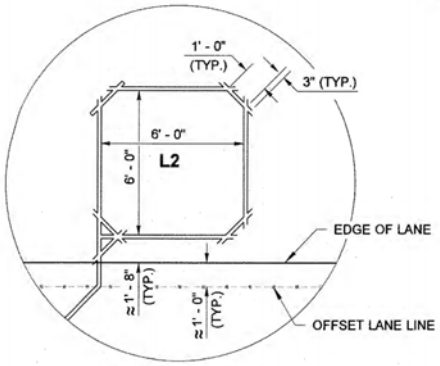

LOOP SAW-CUT DETAIL

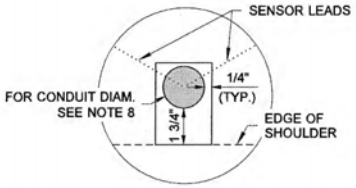

SHOULDER NOTCH

DETAIL (B)

NOTES

1. See **Standard Plan J-50.30** for Piezo Axle Sensor General Installation instructions, and Modified Type 2 Loop Wiring Details.
2. The Contractor shall notify the Statewide Travel and Collision Data Office (STCDO) (formerly TDO) a minimum of five working days prior to the scheduled site installation. An inspector from the WSDOT STCDO shall be on site for all phases of installation.
3. The loop inductance of two loops within the same lane shall be within 20 micro henries of each other. All piezo ohms readings shall be O\L from shield to center conductor. Class WIM piezo capacitance shall be 8nf to 20nf.
4. The loops and axle sensors shall be cut in the final lift of asphalt after lane striping is completed. All PTR loops shall be spaced @ 16 ft. leading edge to leading edge.
5. For concrete pavement lanes with asphalt shoulders, install all of the piezo sensors and splices in the concrete lane. Also, for concrete pavement lanes, install the loops 4" to 6" away from the expansion joints.
6. The shoulder notch length along the roadway shall be 4" or the conduit diameter plus 2" or whichever is larger. The shoulder notch width perpendicular to the roadway shall be the conduit size plus 1/4".
7. After all sensor leads are installed, seal the end of the conduit with conduit sealant. Use asphalt cold-patch to fill notch unless otherwise specified in Contract.
8. Use Schedule 40 PVC conduit from the Junction Box to the Cabinet. Where there are 2 to 4 lanes, use one 1 1/4" min. conduit for each direction of travel. Where there are 5 lanes in either direction of travel, use one 2" min. conduit for each direction. Where there are 6 or more lanes in either direction, use one 3" min. conduit for each direction.
9. Use Schedule 80 PVC, HDPE, or steel conduit under the roadway. For conduit installation, see **Standard Specification 8-20.3(5).**
10. Junction Boxes installed in the paved shoulder or median shall be a Heavy Duty Junction Box. If box is installed in unpaved shoulder use type 1 or 2. **See Standard Plan J-40.10** for size and type. See **Standard Specification 9-29.2(1)B**. for further information.
11. All loop wire, loop leads, and piezo leads shall be labeled with colored electrical tape at all Junction Boxes, Pull Boxes and Cabinets. For Wire Color Code Identification Chart & Detail see **Standard Plan J-50.30.**
12. Cabinet can be placed on either side of the road depending on terrain/slope, etc. It does not have to be placed on increasing milepost side of the roadway.
13. For 6-lane layouts and above, see Contract.
14. Concrete lanes shall use 11' class 1 piezos. Asphalt lanes with 1' shoulder or less may use 12' piezos. For shoulders over 1', use 13' piezos.

JOHN C. NISBET
STATE OF WASHINGTON
29115
REGISTERED
PROFESSIONAL ENGINEER
6/02/2011

WEIGH-IN-MOTION SITE INSTALLATION DETAILS
STANDARD PLAN J-50.25-00

SHEET 1 OF 2 SHEETS

APPROVED FOR PUBLICATION
STATE DESIGN ENGINEER — DATE 6/3/11
Washington State Department of Transportation

DRAWN BY: FERN LIDDELL

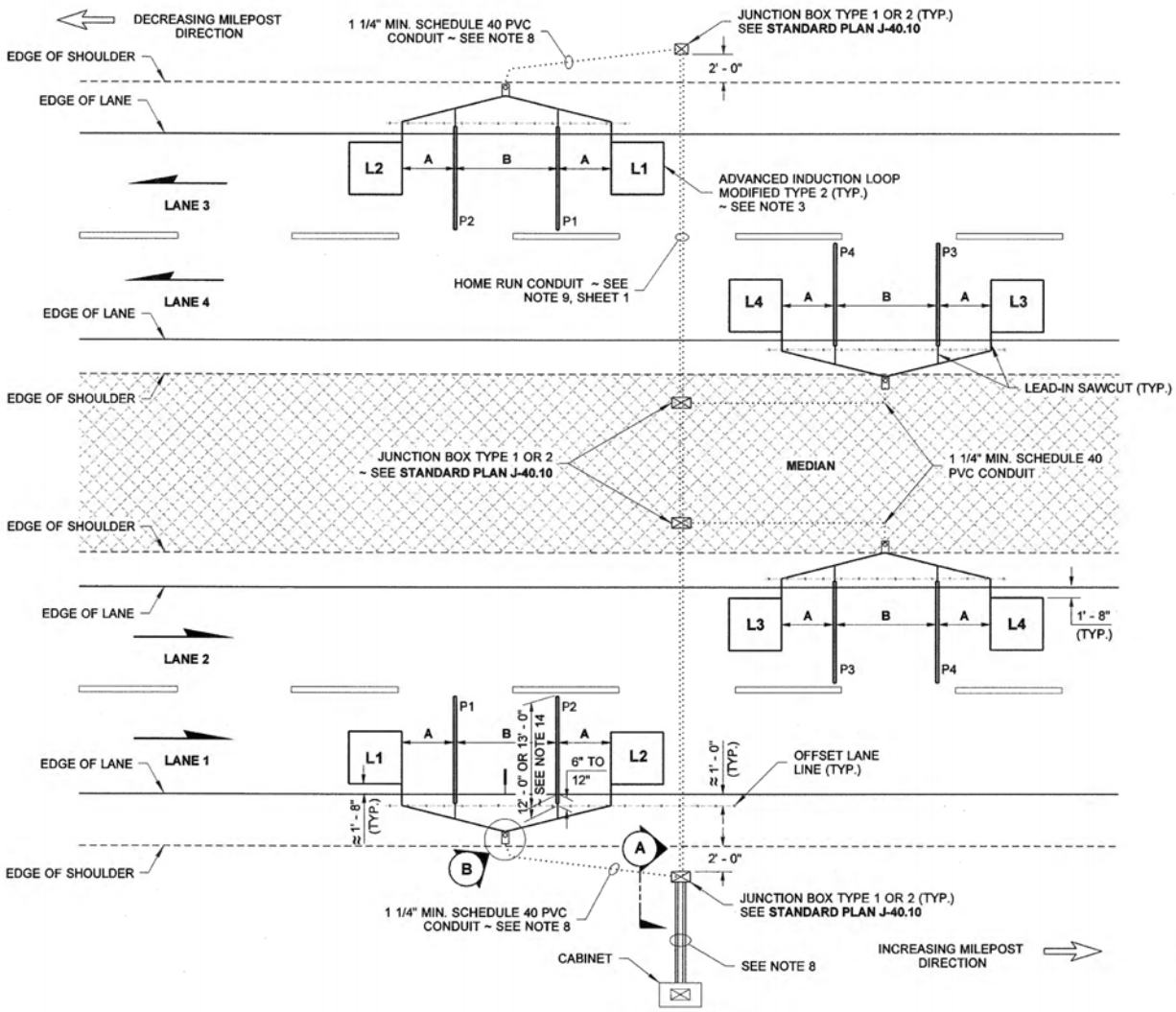

PLAN VIEW

TYPICAL 4 - LANE WIM LAYOUT WITH MEDIAN

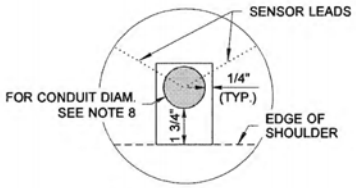

SHOULDER NOTCH

DETAIL (B)

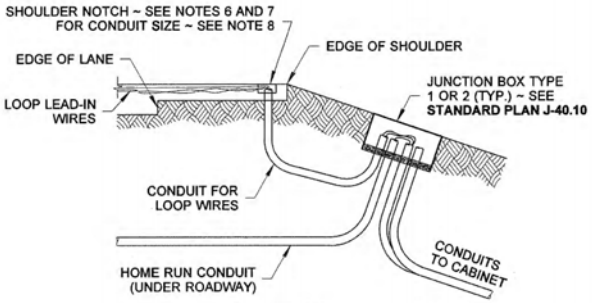

SECTION (A)

INDUCTION LOOP TO PIEZO AXLE SPACING		
	A	B
RURAL	6'	12'
URBAN	2'	10'

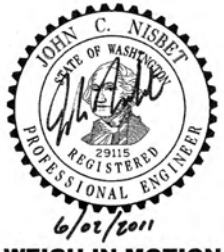

6/02/2011

WEIGH-IN-MOTION SITE INSTALLATION DETAILS STANDARD PLAN J-50.25-00

SHEET 2 OF 2 SHEETS

APPROVED FOR PUBLICATION

STATE DESIGN ENGINEER — DATE 6/3/11

Washington State Department of Transportation

INDUCTION LOOP / PIEZO AXLE SENSOR NUMBER IDENTIFICATION

INCREASING DIRECTION

Lane 1 - (drive lane) ~ Loop L1, Piezo P1, Piezo P2, Loop L2

Lane 2 - (pass lane) ~ Loop L3, Piezo P3, Piezo P4, Loop L4

DECREASING DIRECTION

Lane 3 - (drive lane) ~ Loop L1, Piezo P1, Piezo P2, Loop L2

Lane 4 - (drive lane) ~ Loop L3, Piezo P3, Piezo P4, Loop L4

DRAWN BY: FERN LIDDELL

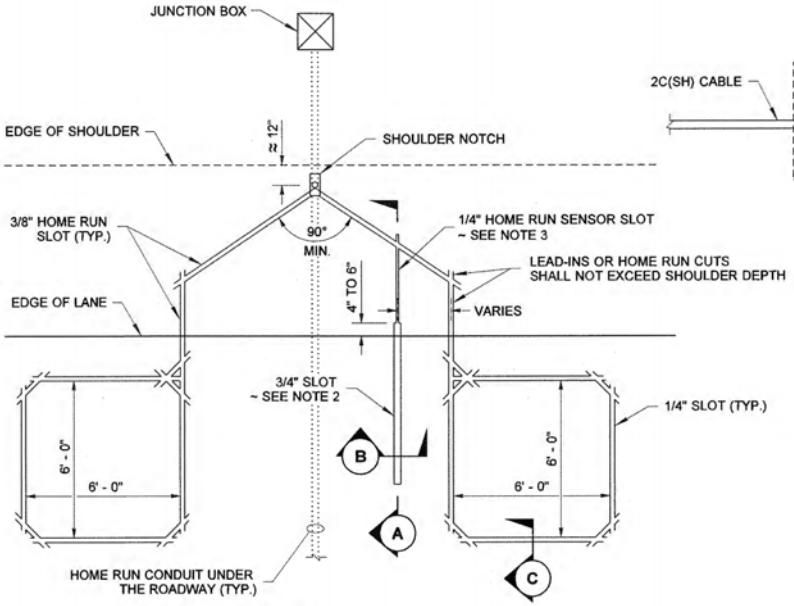

SAWCUT LAYOUT FOR PERMANENT TRAFFIC RECORDER SITE

(MODIFIED TYPE 2 LOOP SHOWN)

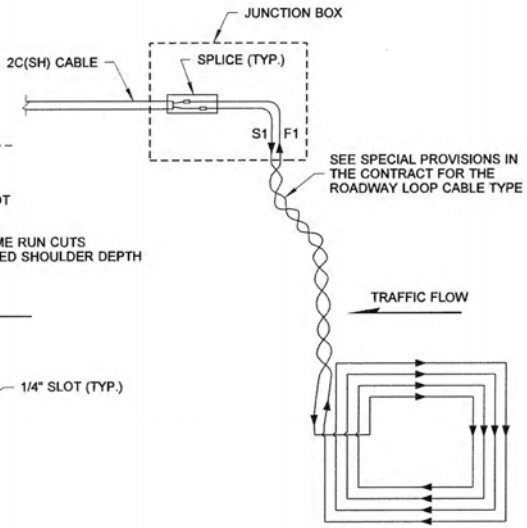

MODIFIED TYPE 2 ADVANCE LOOP WIRING DIAGRAM

THESE ARE GENERAL INSTALLATION INSTRUCTIONS

SEE SPECIFIC MANUFACTURER'S INSTALLATION INSTRUCTIONS IN THE SPECIAL PROVISIONS OF THE CONTRACT

1. Using paint and a straight edge, carefully mark the layout of the sensor installation. Ensure sensors are placed exactly perpendicular to the flow of traffic and that all lines are straight. Verify that the piezo coax length can reach the cabinet with a minimum of 8 ft. of cable inside the cabinet.
2. Using a wet-cutting pavement saw with a 3/4" blade width, cut the piezo slot approximately 4 to 6 inches longer than the piezo length. The piezo slot depth must be a minimum of 1" to a maximum of 1 1/2".
3. Lead-in cuts for the piezo coax should be 1/4" minimum wide, at a depth of 1 1/2" to 2".
4. Using a pressure washer, remove all slurry and loose material from the piezo slot.
5. Completely dry piezo slot. No moisture or oily residue shall be allowed in piezo slot.
6. After piezo cut is dry, wire brush sides and bottom of entire piezo slot. Blow out loose debris.
7. Install the piezo according to manufacturer's recommendations. Class 2 piezo sensors shall be placed at bottom of piezo slot. Class 1 sensors must be installed at a specific depth particular to each site location. This depth will be measured and set by Statewide Travel and Collision Data Office (formerly TDO) inspector on site.
8. Place two pieces of 2" duct tape along the length of the sensor slot. Tape should be about 1/16" from slot edge.
9. Mix epoxy according to manufacturer's recommendations and pour in slot into small bead. Make sure grout pours into slot slowly to avoid air pockets. Start at the piezo end and pour toward the coax to piezo attachment point. Repeat until the slot is completely full, at least two passes.
10. Use a putty knife with a notched center to spread the epoxy smooth the length of the sensor.
11. Remove tape.
12. Class 2 sensor installation is complete after epoxy has cured. Class 1 WIM sensors shall be sanded flush with the pavement surface the entire length of the piezo sensor. Use a belt sander with a coarse grit paper to get an even surface finish.
13. Lead-in placement and saw-cut methods vary depending on Regional preference and location. Coordination between WSDOT and Contractor is needed to determine method to be used prior to installation.
14. Place the Installation Brackets on the sensor every 12" for class 2 sensor, and every 8" for class 1 sensor, for the length of the sensor. Use the 3/4" brackets.

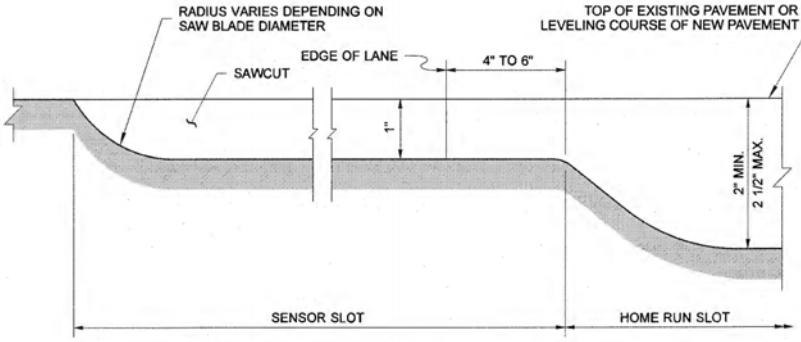

SECTION (A)

BEFORE SENSOR INSTALLATION

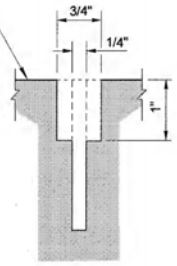

SECTION (B)

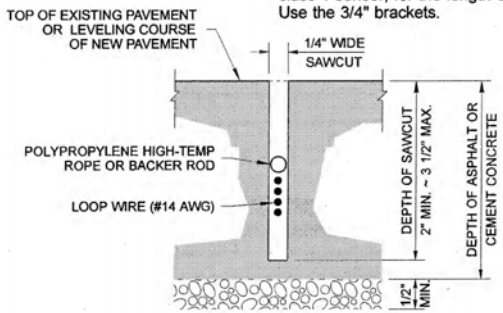

SECTION (C)

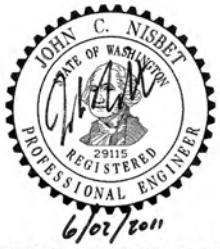

PERMANENT TRAFFIC RECORDER AND WEIGH-IN-MOTION DETAILS STANDARD PLAN J-50.30-00

SHEET 1 OF 3 SHEETS

APPROVED FOR PUBLICATION

STATE DESIGN ENGINEER — DATE 6/3/11

Washington State Department of Transportation

DRAWN BY: FERN LIDDELL

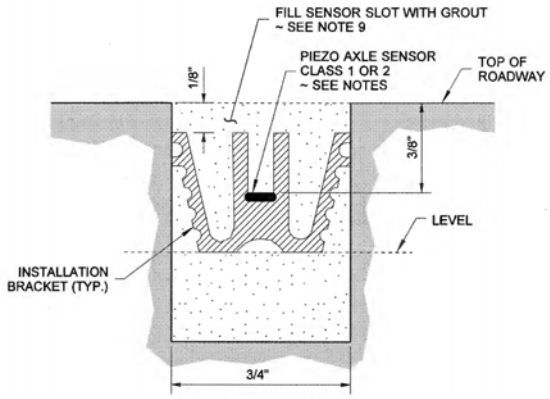

SECTION D

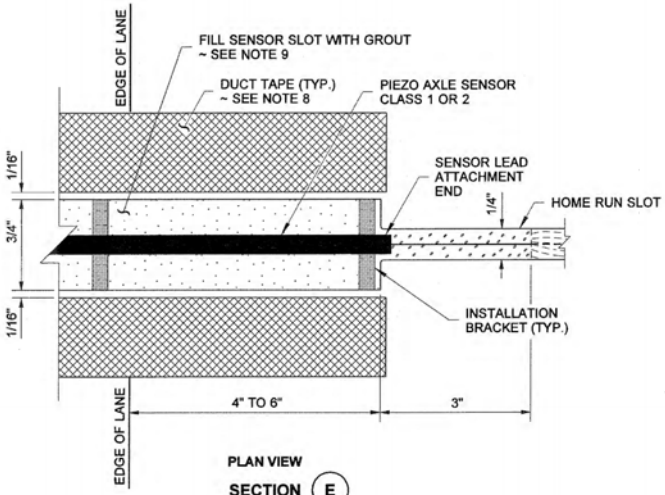

PLAN VIEW

SECTION E

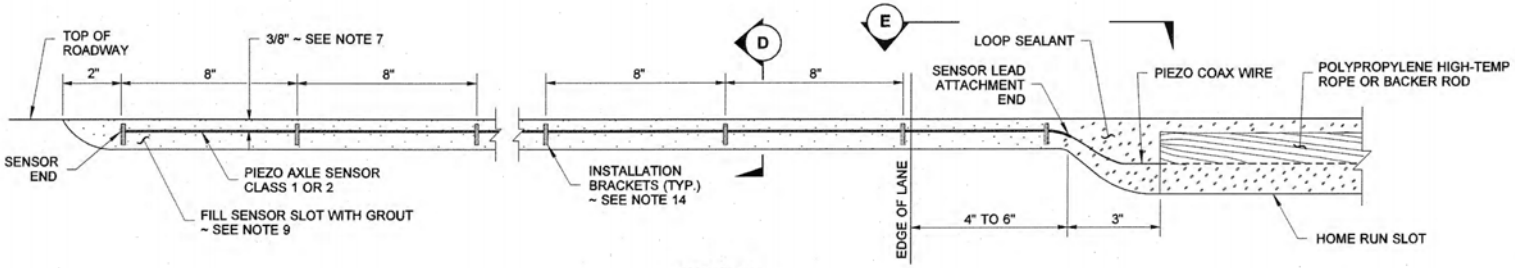

SIDE VIEW

BRACKET AND PIEZO LAYOUT

6/02/2011

PERMANENT TRAFFIC RECORDER AND WEIGH-IN-MOTION DETAILS STANDARD PLAN J-50.30-00

SHEET 2 OF 3 SHEETS

APPROVED FOR PUBLICATION

STATE DESIGN ENGINEER — DATE 6/3/11

Washington State Department of Transportation

DRAWN BY: FERN LIDDELL

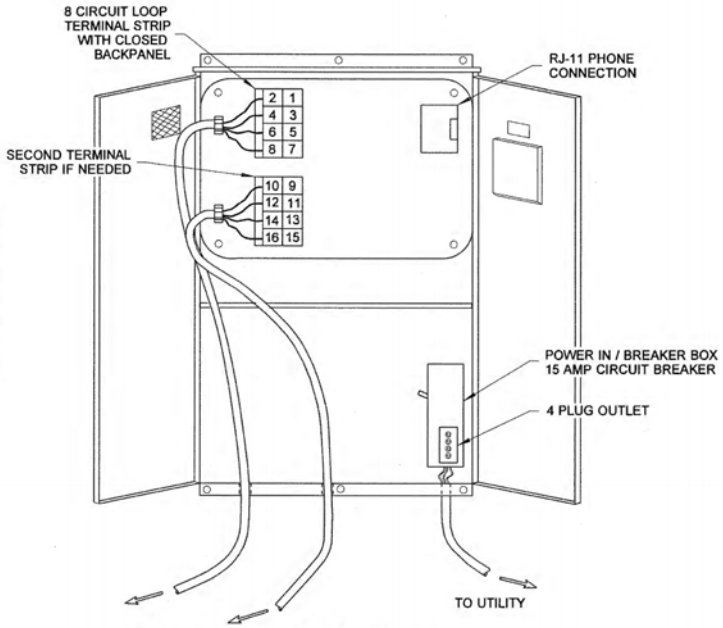

TYPICAL SERVICE CABINET

SEE NOTES 2 THRU 5

COLOR CODE IDENTIFICATION	
COLOR	WIRE NO.
BLACK	0
BROWN	1
RED	2
ORANGE	3
YELLOW	4
GREEN	5
BLUE	6
VIOLET	7
GRAY	8
WHITE	9
BROWN & BLACK	10
BROWN & BROWN	11
BROWN & RED	12
BROWN & ORANGE	13
BROWN & YELLOW	14
BROWN & GREEN	15
BROWN & BLUE	16
BROWN & VIOLET	17
WHITE IS ALSO USED FOR DESIGNATING INCREASING MILE POSTS	

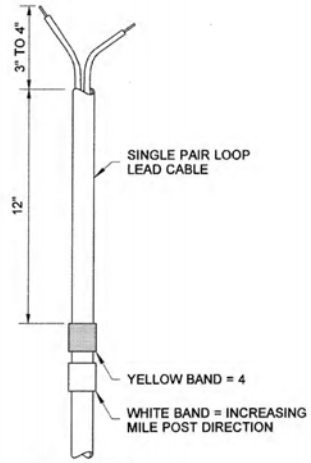

COLOR CODE WIRE DETAIL

NOTES

1. The Loop and Piezo leads in all Junction Boxes and Cabinets are to be color-coded. Use colored tape on each specific wire, see table. Wrap the tape on the wires approximately 6" beyond conduit in all Junction Boxes.
2. The maximum load in the cabinet is 5 Amps.
3. The cabinet may be pedestal or pad mount. See **Standard Plan J-10.10** for details.
4. See **Special Provisions** in the contract for the Cabinet dimensions. See **Standard Specification 9-29.24** for other requirements.
5. For Grounding Details, See **Standard Plan J-60.05**. See **Standard Specification 8-20.3(9)** for other requirements.

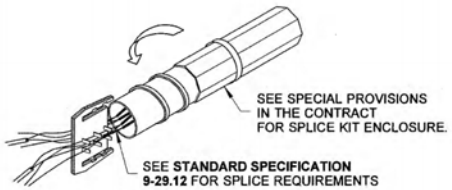

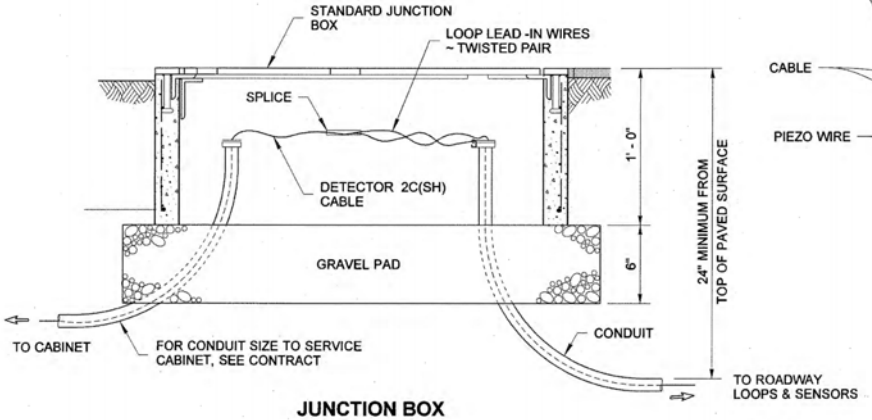

JUNCTION BOX

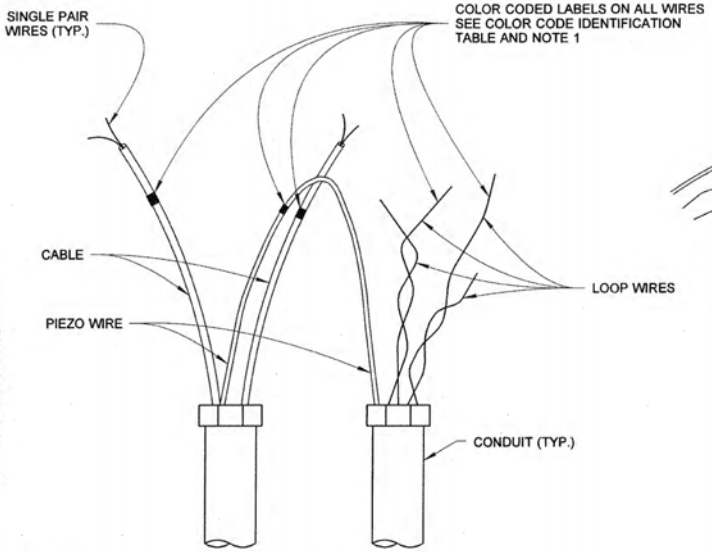

JUNCTION BOX WIRING

(SHOWN PRIOR TO SPLICING)

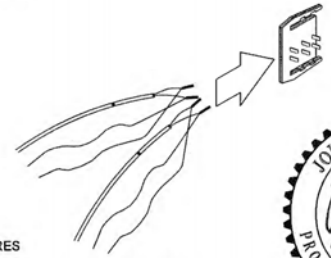

SPLICE DETAIL

JOHN C. NISBET
STATE OF WASHINGTON
29115
REGISTERED
PROFESSIONAL ENGINEER
6/02/2011

PERMANENT TRAFFIC RECORDER AND WEIGH-IN-MOTION DETAILS
STANDARD PLAN J-50.30-00

SHEET 3 OF 3 SHEETS

APPROVED FOR PUBLICATION

STATE DESIGN ENGINEER — DATE 6/3/11

Washington State Department of Transportation

DRAWN BY: LISA CYFORD

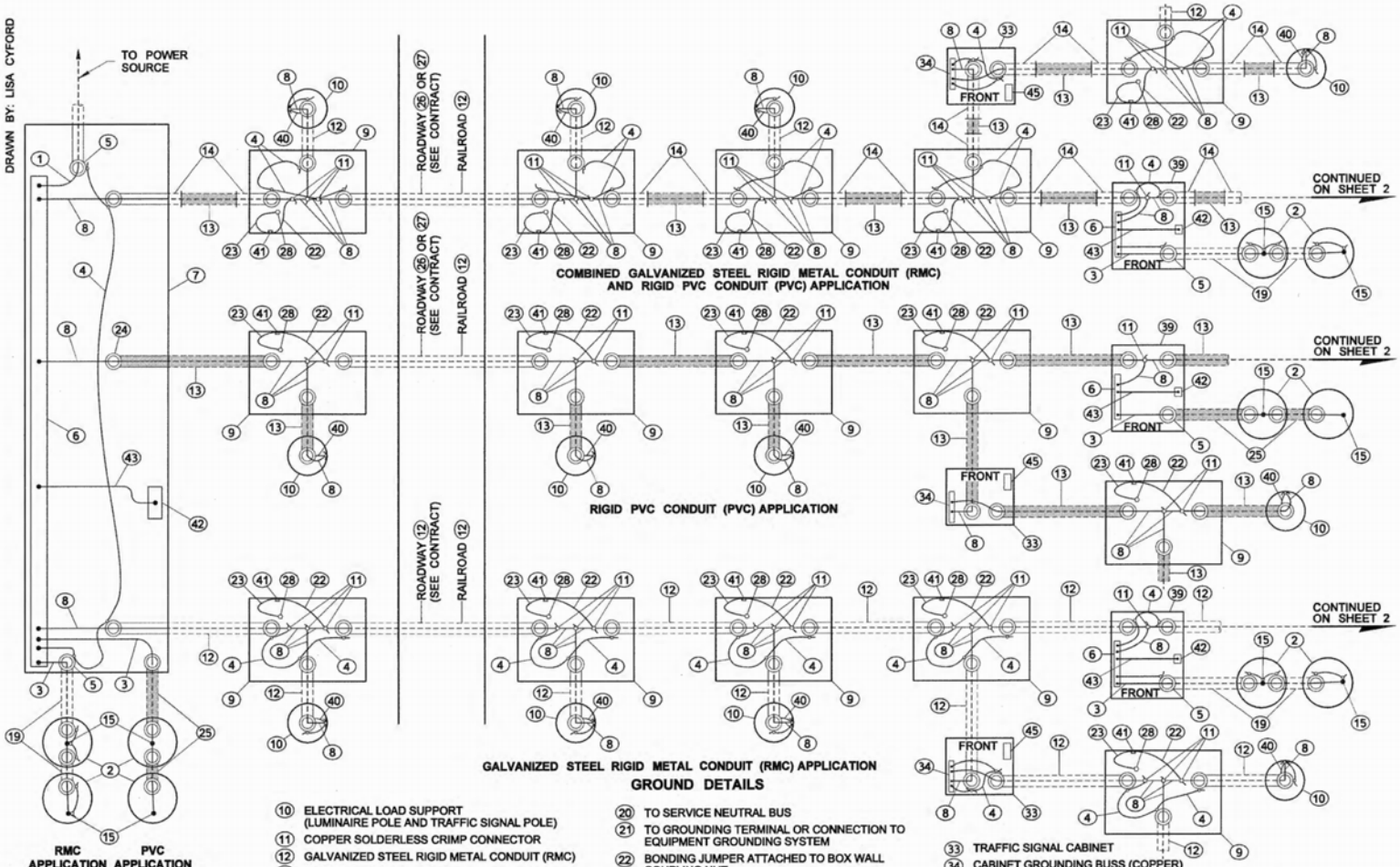

GROUND DETAILS

KEY

1. SERVICE NEUTRAL
2. SERVICE GROUND
3. GROUNDING ELECTRODE CONDUCTOR
4. BONDING JUMPER
5. GROUNDING BUSHING (TYP. ALL RMC CONDUIT TERMINATIONS)
6. GROUNDED NEUTRAL BUS (COPPER)
7. SERVICE ENCLOSURE
8. EQUIPMENT GROUNDING CONDUCTOR
9. JUNCTION BOX
10. ELECTRICAL LOAD SUPPORT (LUMINAIRE POLE AND TRAFFIC SIGNAL POLE)
11. COPPER SOLDERLESS CRIMP CONNECTOR
12. GALVANIZED STEEL RIGID METAL CONDUIT (RMC)
13. RIGID PVC CONDUIT (PVC)
14. OPTION A - 10' RMC WITH FIELD BEND
    - APPROVED ADAPTER FITTING
    - GROUNDING BUSHING

    OPTION B - 10' RMC
    - GS FACTORY ELBOWS
    - APPROVED ADAPTER FITTING
    - GS COUPLING
    - GROUNDING BUSHING
15. GROUND ROD
16. EDGE OF FOUNDATION, POLE OR SERVICE SUPPORT
17. CLAMP
18. JUNCTION BOX OR 8" DRAIN TILE WITH APPROVED COVER
19. CODE SIZE RMC
20. TO SERVICE NEUTRAL BUS
21. TO GROUNDING TERMINAL OR CONNECTION TO EQUIPMENT GROUNDING SYSTEM
22. BONDING JUMPER ATTACHED TO BOX WALL COUPLING NUT
23. BONDING JUMPER ATTACHED TO BOX LID(S) GROUND STUD. # 8 AWG (MIN.) × 4' TINNED BRAIDED COPPER.
24. END BELL BUSHING (TYP. ALL NON-METALLIC CONDUIT TERMINATIONS)
25. CODE SIZED PVC
26. HIGH-DENSITY POLYETHYLENE CONDUIT (HDPE)
27. NON-METALLIC CONDUIT (PVC) SCHEDULE 80
28. BOX LID(S) GROUND STUD
29. CABLE VAULT
30. PULL BOX
31. ITS CABINET
32. EDGE OF FOUNDATION
33. TRAFFIC SIGNAL CABINET
34. CABINET GROUNDING BUSS (COPPER)
35. RIGID PVC OUTERDUCT WITH PVC OR PE INNERDUCT
36. GALVANIZED STEEL RIGID METAL CONDUIT OUTERDUCT WITH PVC OR PE INNERDUCT
37. LOCATE WIRE. COIL 10' INSIDE CABINET, CABLE VAULT, OR PULL BOX
38. DETECTABLE UNDERGROUND WARNING TAPE. COIL 2' INSIDE CABINET, CABLE VAULT, OR PULL BOX
39. TRANSFORMER CABINET
40. GROUNDING CONDUCTOR NON-INSULATED (FROM REINFORCING CAGE)
41. BOX FRAME BONDING ATTACHMENT POINT
42. GROUND LUG WELDED TO CABINET WALL (W/ TINNED COPPER BUSS)
43. CABINET MAIN BONDING JUMPER
44. ITS CAMERA, RAMP METER, TRAFFIC DATA STATION, HIGHWAY ADVISORY RADIO
45. UNGROUNDED CABINET NEUTRAL BUSS (COPPER)

NOTES

1. If parallel circuits of different sizes are contained in one conduit, the size of the grounding conductor shall be determined on the basis of the largest conductor. Only one grounding conductor is required for each conduit, regardless of the number of circuits contained.
2. Service ground per serving utility requirement. If the utility uses aluminum service conductors, an approved Al-Cu pressure-type ground connector shall be used to secure the service neutral to the copper neutral bar in the service enclosure. Except for the above, all grounding conductors shall be copper.
3. Equipment grounding conductors and grounding electrode conductors shall be sized in accordance with the National Electric Code (No. 8 minimum).

TYPICAL GROUNDING DETAILS

STANDARD PLAN J-60.05-00

SHEET 1 OF 4 SHEETS

APPROVED FOR PUBLICATION

STATE DESIGN ENGINEER — DATE 6/16/11

Washington State Department of Transportation

DRAWN BY: LISA CYFORD

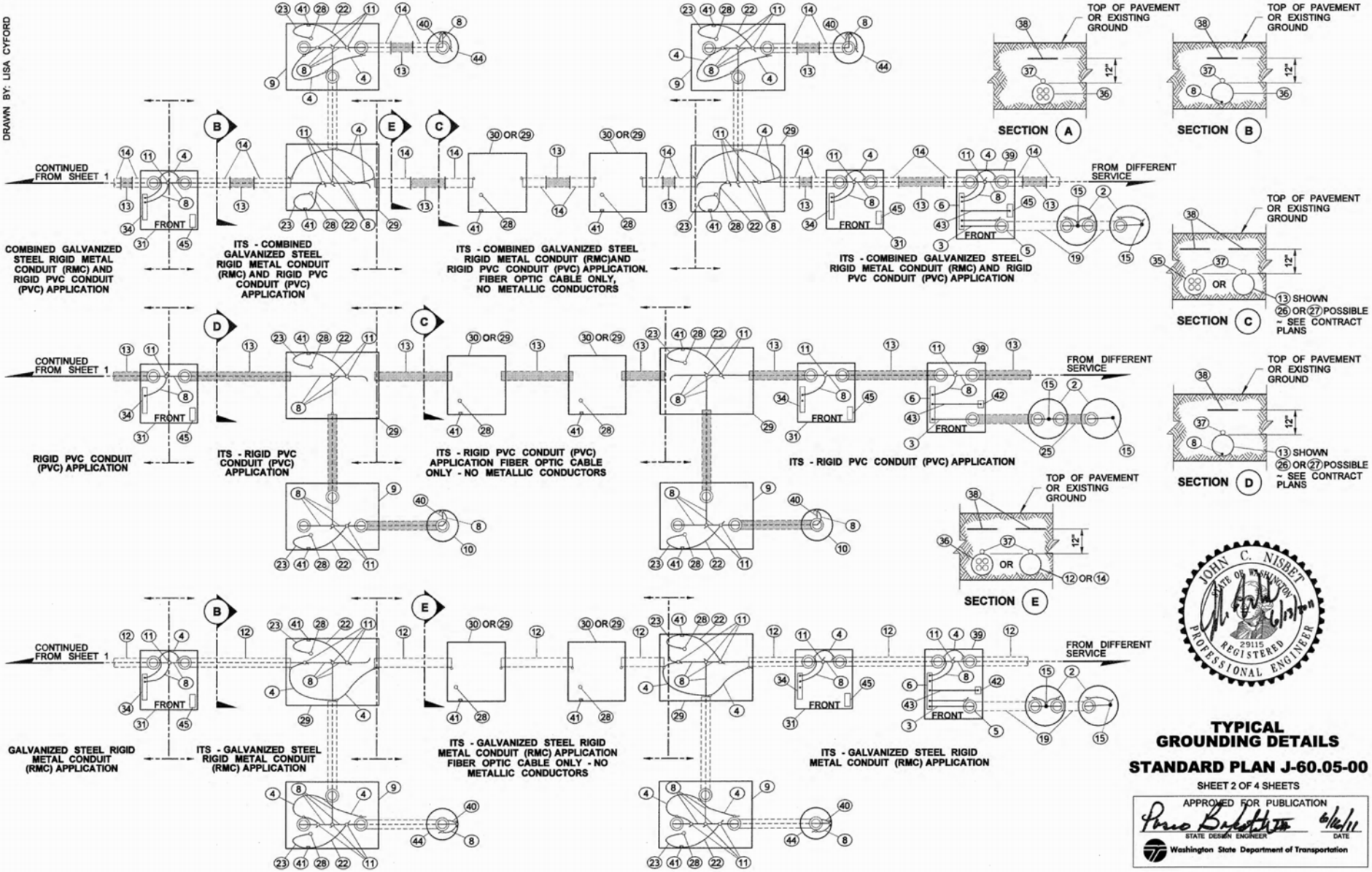

JOHN C. NISBET
STATE OF WASHINGTON
29115
REGISTERED PROFESSIONAL ENGINEER
6/13/11

TYPICAL GROUNDING DETAILS

STANDARD PLAN J-60.05-00

SHEET 2 OF 4 SHEETS

APPROVED FOR PUBLICATION

STATE DESIGN ENGINEER — DATE 6/14/11

Washington State Department of Transportation

DRAWN BY: LISA CYFORD

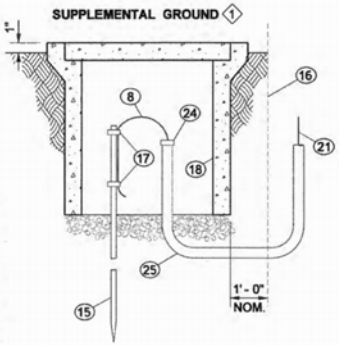

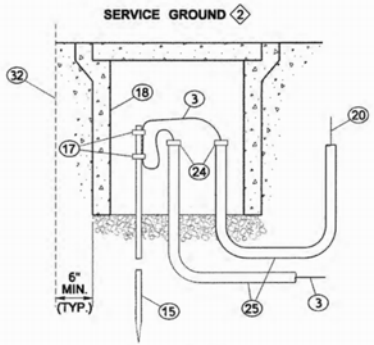

DETAIL A

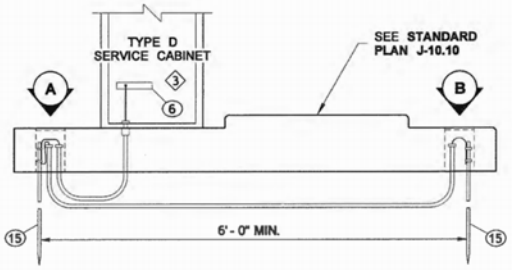

RIGID PVC CONDUIT (PVC) APPLICATION

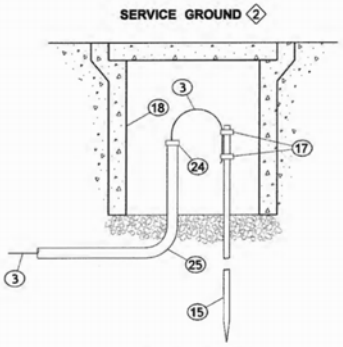

DETAIL B

SEE KEY ON SHEET 1
FOR PARTS

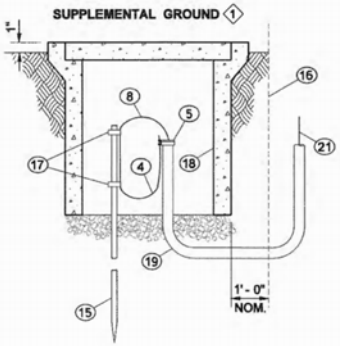

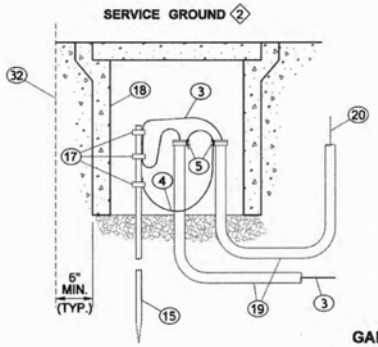

DETAIL C

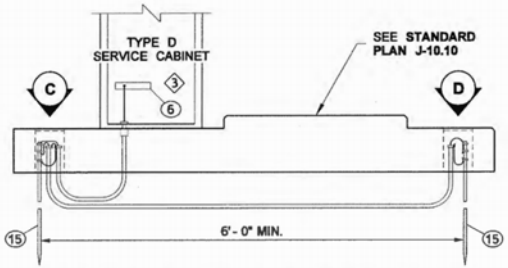

GALVANIZED STEEL RIGID METAL CONDUIT (RMC) APPLICATION

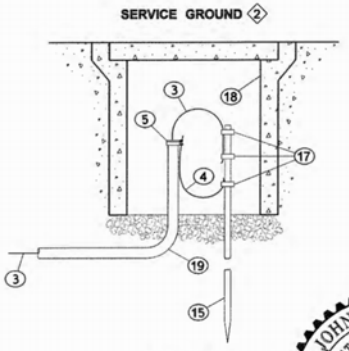

DETAIL D

1. Required to supplement equipment grounding for luminaire standards with direct burial aerial feeds, or where required in the plans
2. Required at all service and separately derived systems
3. Type D service cabinet shown. Use this concept for Type E cabinet or transformer. Type D service cabinet shall be installed on lower surface of foundation only. Type B service cabinet and transformer cabinet shall be installed on raised surface of foundation only.
4. Type B modified service cabinet
5. Grounding electrode conductor and equipment grounding conductor shall not be routed through lug on grounding bushing.

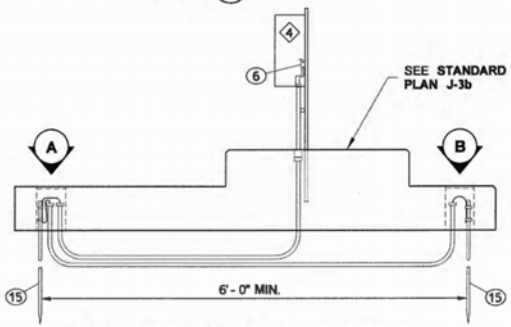

RIGID PVC CONDUIT (PVC) APPLICATION

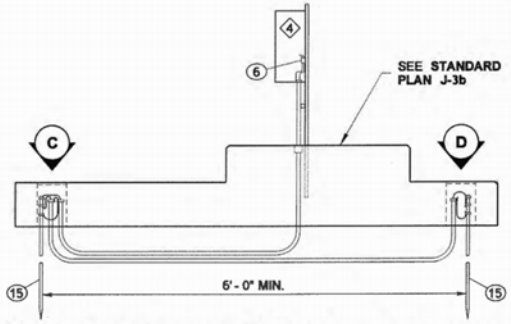

GALVANIZED STEEL RIGID METAL CONDUIT (RMC) APPLICATION

TYPICAL GROUNDING DETAILS

STANDARD PLAN J-60.05-00

SHEET 3 OF 4 SHEETS

APPROVED FOR PUBLICATION

STATE DESIGN ENGINEER — DATE

Washington State Department of Transportation

(1) 3/8" × 2" × 2" Frame Bonding Stud Plate with 1/4NC × 1" Stainless Steel Bonding Stud.
- Weld Bonding Stud to Frame Bonding Plate.
- Weld to lid support frame.
- 1/4" weld ~ 3 sides.
- Grind lid bearing surface flat after welding.
- All corners rounded. Corners along exposed sheared or cut edges shall be broken by light grinding to achieve an approximate 1/16" (inch) chamfer or rounding.
- Protect conductors with fireproof cloth prior to welding.
- Omit Frame Bonding Stud Plate if the Frame Bonding point already exists.

(2) Weld all around lid bonding stud ~ 1/4 NC × 1" stainless steel ~ liberally coat entire assembly w/ anti-seize compound.

DRAWN BY: LISA CYFORD

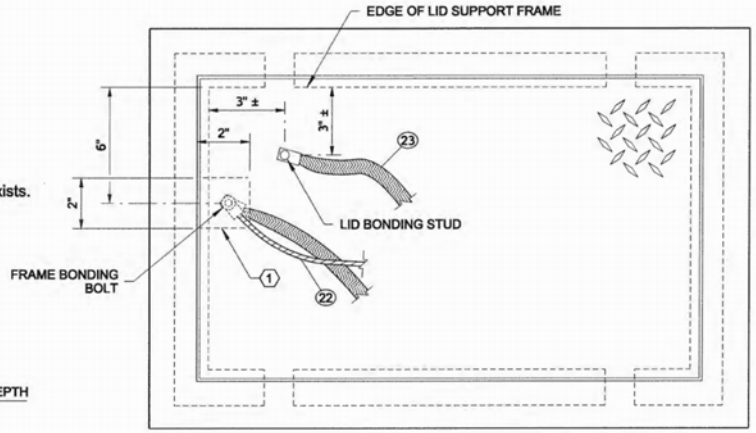

PLAN

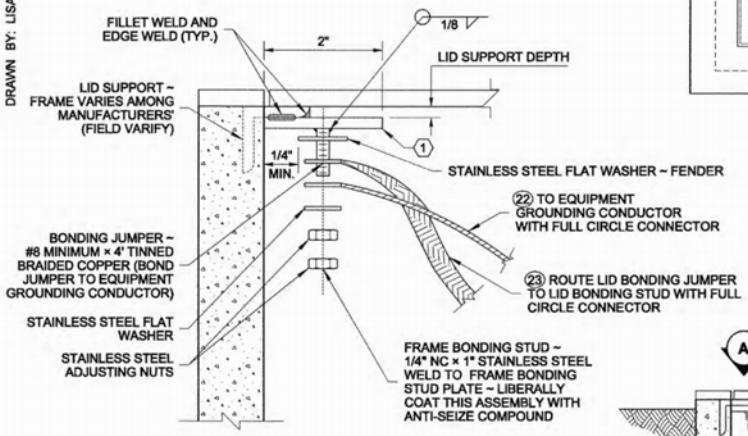

FRAME BONDING DETAIL (A)

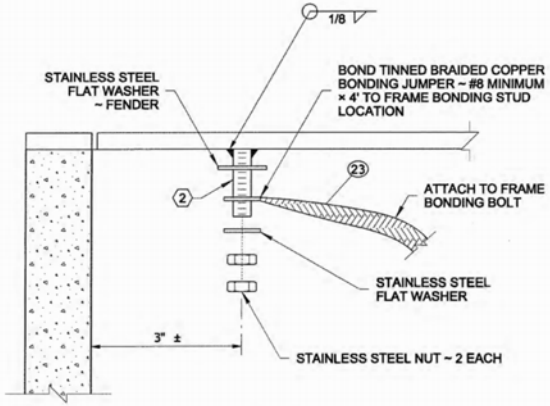

LID BONDING DETAIL (B)

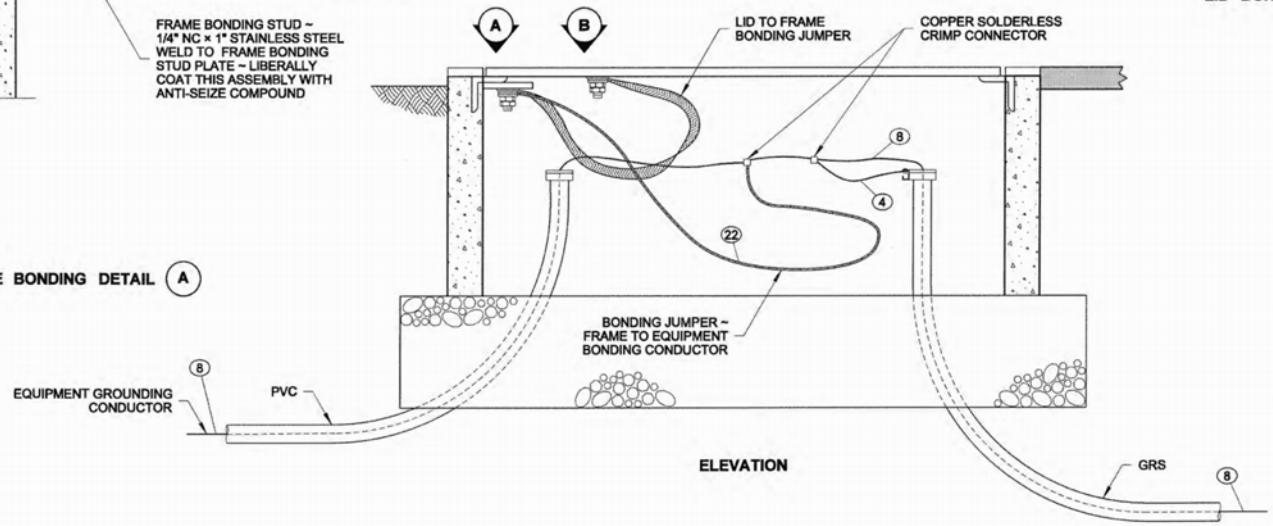

ELEVATION

TYPICAL GROUNDING DETAILS

STANDARD PLAN J-60.05-00

SHEET 4 OF 4 SHEETS

APPROVED FOR PUBLICATION

STATE DESIGN ENGINEER — DATE

Washington State Department of Transportation

NOTES

1. Install Galvanized Steel Rigid Metal Conduit (RMC) between the Junction Box(es) Type 1 and the DX fitting(s) "**A**". RMC conduit shall also be used from the DX fitting(s) "**A**" to the PVC adaptor in the barrier.

   PVC Conduit may be used only in stationary-form barriers. Connect to RMC using a PVC adaptor.

   RMC Conduit may be used in stationary-form barriers, but it shall be used in slip-form barriers.

2. See **Standard Plan D-15.10** for additional information on F-Shape barrier, or see Standard Plan **D-15.20** for Single-Slope Barrier.

3. Pipe wrap tape shall be 2" wide, 20 ml thick, and installed with 1" minimum overlap.

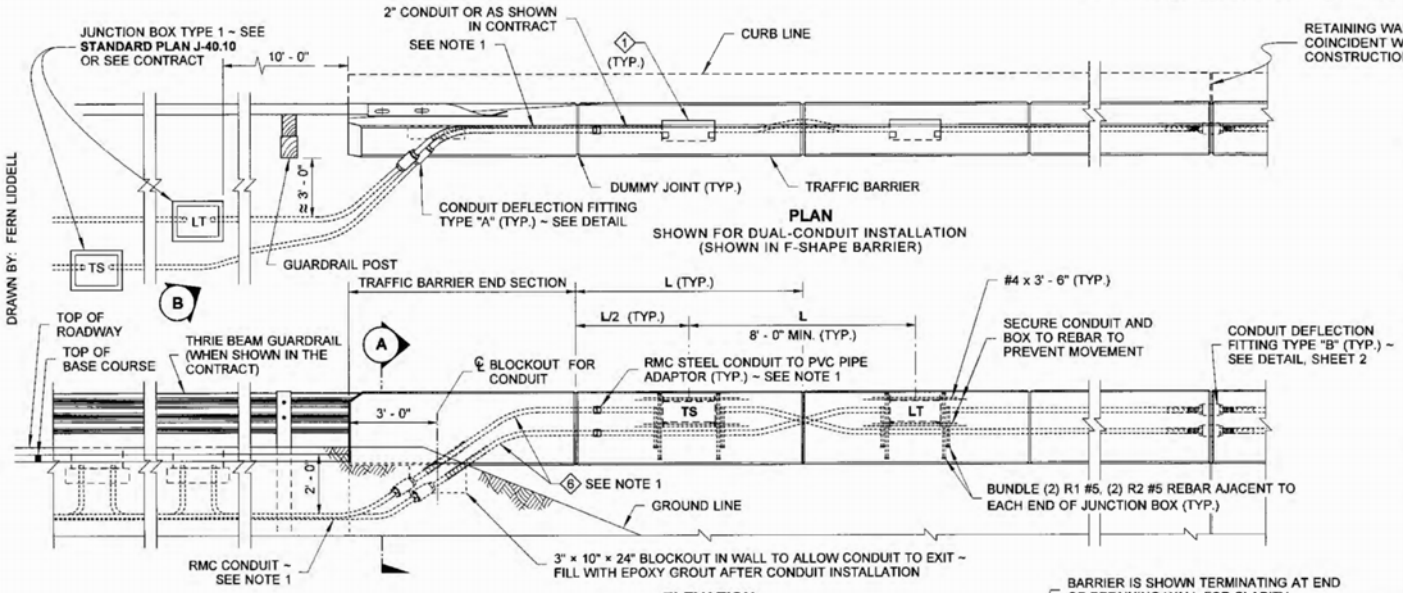

DRAWN BY: FERN LIDDELL

KEY NOTES

1. Junction Box (mount box so cover is flush with the barrier face with a 0" tolerance protruding beyond the barrier face and 1/8" recessed). Use NEMA 4X Junction Box with stationary-forms ~ See **Standard Plan J-40.36.** Use NEMA 3R Junction Box with slip-forms ~ See **Standard Plan J-40.37.**
2. Type DX Deflection (DX) Fitting with Internal Bonding Jumper.
3. Wrap Conduit Pipe from Conduit Deflection Fitting to 1' - 0" beyond (inside) barrier surface.
4. 1' - 0" long, 3/4" thick expanded closed-cell foam sleeve around conduit and conduit fitting. After placing wire ties, duct tape seams and ends to seal and prevent concrete from bonding with fitting and conduit.
5. Where conduit in a structure is routed across a joint, wrap the conduit pipe for 1' - 0" on each side of the joint.
6. 10' - 0" long section of RMC conduit.
7. Deflection Fitting shall be in neutral state after installation.

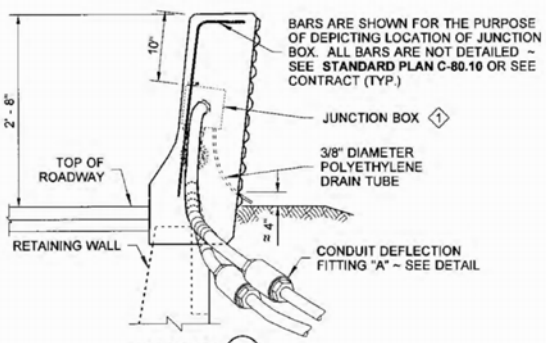

SECTION (A)

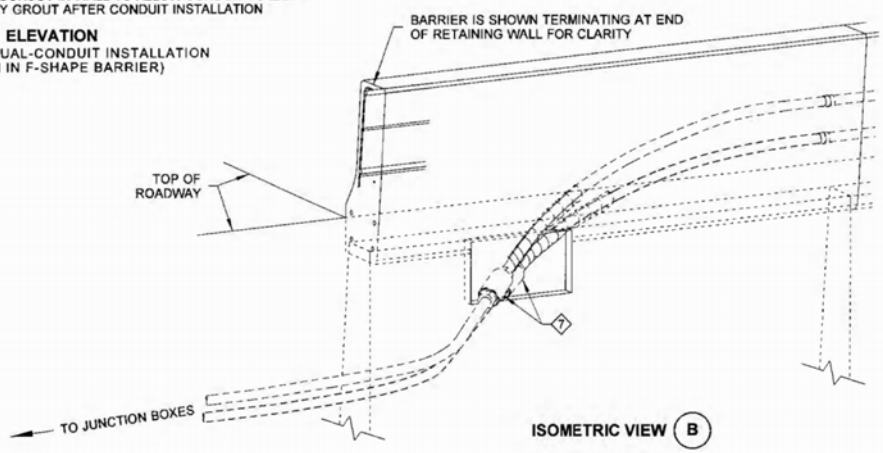

ISOMETRIC VIEW (B)

5-15-13

CONDUIT INSTALLATION IN TRAFFIC BARRIER ON RETAINING WALL

STANDARD PLAN J-60.11-00

SHEET 1 OF 2 SHEETS

APPROVED FOR PUBLICATION

STATE DESIGN ENGINEER — DATE 5/20/13

Washington State Department of Transportation

DRAWN BY: FERN LIDDELL

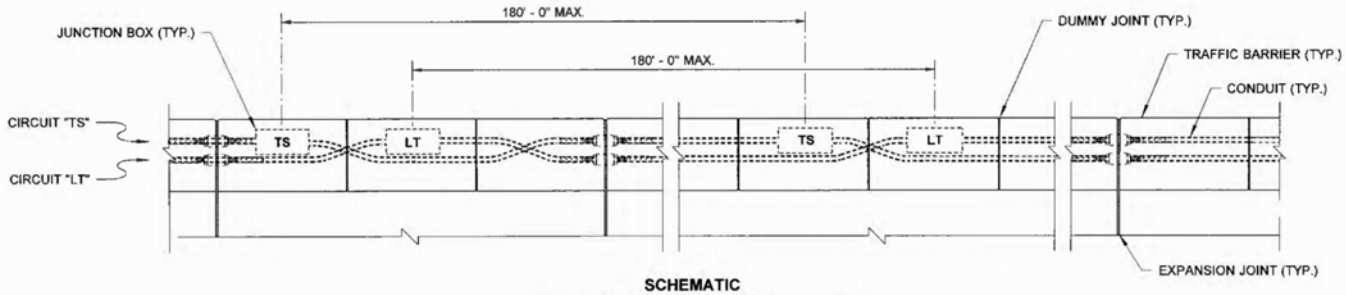

SCHEMATIC
SHOWN FOR DUAL-CONDUIT INSTALLATION
(CIRCUIT TYPES MAY VARY)

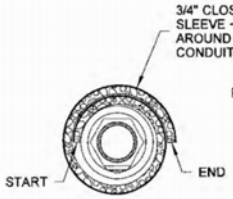

SECTION (B)

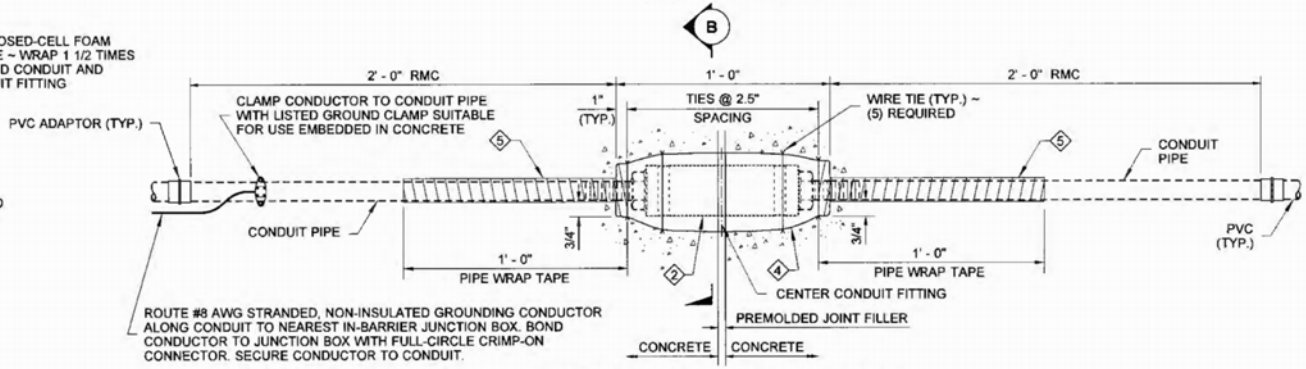

CONDUIT DEFLECTION FITTING "B" DETAIL
CONVERT RMC TO PVC IN STATIONARY-FORM BARRIER

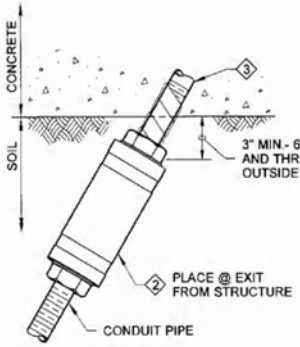

CONDUIT DEFLECTION FITTING "A" DETAIL
CONDUIT FITTING - TYPE DX ~ PLACE AT CONDUIT PIPE EXIT FROM STRUCTURE

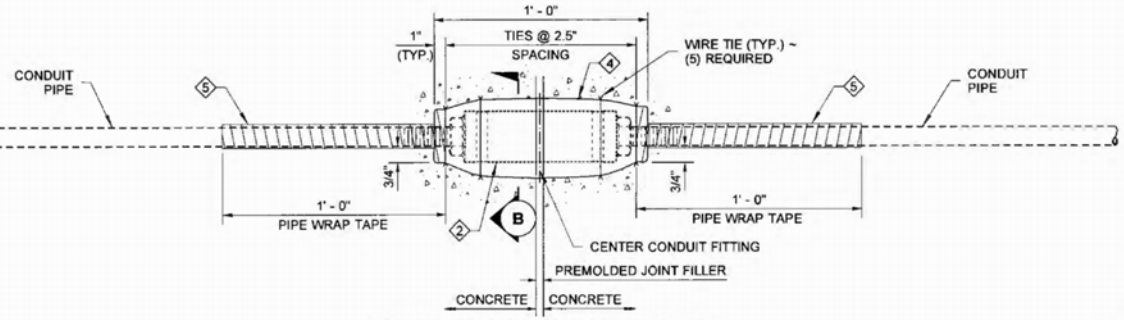

CONDUIT DEFLECTION FITTING "B" DETAIL
CONDUIT FITTING - TYPE DX ~ FOR DEFLECTION OF 30° AND 3/4" MOVEMENT

CONDUIT FITTING - TYPE DX FOR DEFLECTION OF 30° AND 3/4" MOVEMENT. CONDUIT PIPES PLACED THROUGH RETAINING WALL TRAFFIC BARRIER SHALL BE FITTED WITH DEFLECTION FITTINGS AT MAXIMUM SPACING OF 120'. THE DEFLECTION FITTINGS SHALL BE PLACED AT THE TRAFFIC BARRIER OPEN JOINT THAT COINCIDES WITH THE RETAINING WALL STEM EXPANSION JOINT NEAREST TO THE TRANSVERSE CONSTRUCTION JOINT IN THE WALL FOOTING.

5-15-13

CONDUIT INSTALLATION IN TRAFFIC BARRIER ON RETAINING WALL

STANDARD PLAN J-60.11-00

SHEET 2 OF 2 SHEETS

APPROVED FOR PUBLICATION

STATE DESIGN ENGINEER — DATE 5/20/13

Washington State Department of Transportation

DRAWN BY: FERN LIDDELL

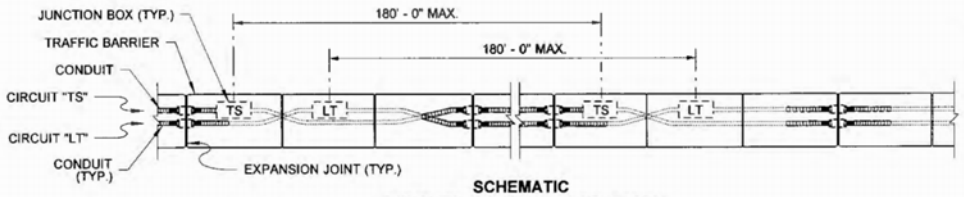

SCHEMATIC
SHOWN FOR DUAL-CONDUIT INSTALLATION
(CIRCUIT TYPES MAY VARY)

NOTES

1. Install a Conduit Deflection (DX) Fitting "A" at the exit from the barrier. Install a Conduit Deflection (DX) Fitting "B" to connect conduit ends at each concrete barrier expansion joint. See **Standard Plan J-60.11** for Conduit Deflection Fitting details.
2. Install Galvanized Steel Rigid Metal Conduit (RMC) between the Junction Box(es) Type 1 and the DX fitting(s) "A." RMC conduit shall also be used from the DX fitting(s) "A" to the PVC adaptor in the barrier.

   PVC conduit may be used only in stationary-form barriers. Connect to RMC using a PVC adaptor.

   RMC conduit may be used in stationary-form barriers, but it shall be used in slip-form barriers.
3. See **Standard Plan C-80.10** for additional details on Single-Slope Concrete Barrier.
4. See **Standard Plan J-60.11** for Conduit Deflection Fitting "B" detail ~ "Convert RMC to PVC in stationary-form barrier."
5. Pipe-wrap tape shall be 2" wide, 20 mil thick, and installed with 1" minimum overlap.

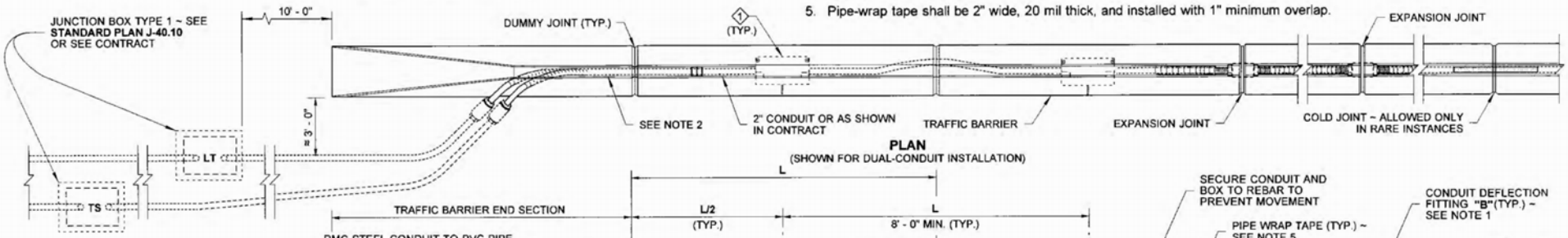

PLAN
(SHOWN FOR DUAL-CONDUIT INSTALLATION)

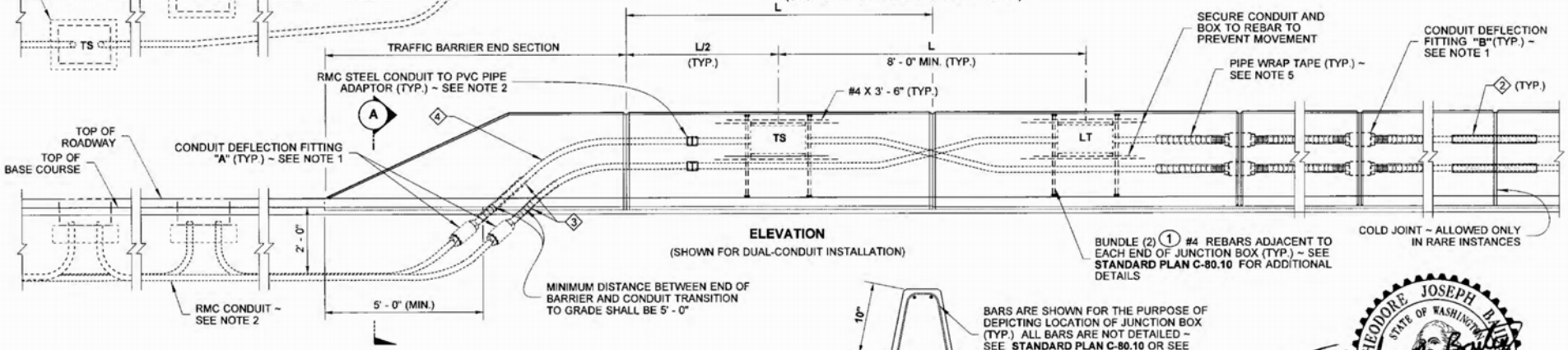

ELEVATION
(SHOWN FOR DUAL-CONDUIT INSTALLATION)

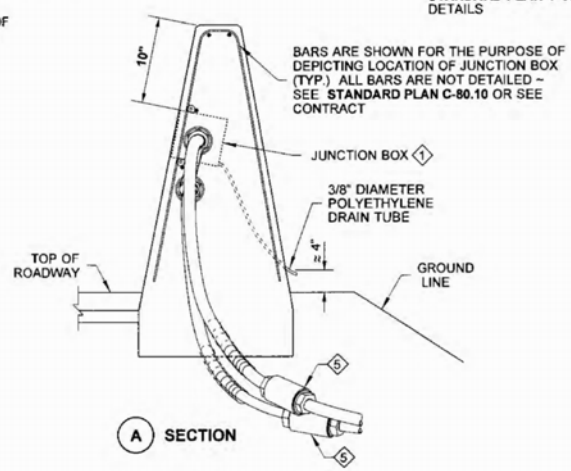

A SECTION

KEY NOTES

1. Junction Box (mount box so cover is flush with the barrier face with a 0" tolerance protruding beyond the barrier face and 1/8" recessed). Use NEMA 4X Junction Box with stationary-forms. See **Standard Plan J-40.36.** Use NEMA 3R Junction Box with slip-forms. See **Standard Plan J-40.37**.
2. Where conduit in a structure is routed across a cold joint with continuous reinforcing steel, install premolded joint filler and wrap the conduit pipe for 1' - 0" on each side of the joint. Omit pipe-wrap tape on PVC conduit.
3. Where conduit exits from a structure, wrap the conduit pipe for 1' - 0" on each side from the exiting point.
4. 10' - 0" long section of RMC conduit.
5. Conduit Deflection Fitting shall be in neutral state after installation.
6. Where conduit in a structure is routed across a joint, wrap the conduit pipe for 1' - 0" on each side of the joint.

THEODORE JOSEPH BAILEY
STATE OF WASHINGTON
39820
REGISTERED PROFESSIONAL ENGINEER

5-15-13

CONDUIT INSTALLATION IN SINGLE-SLOPE CONCRETE BARRIER (DUAL-FACED)

STANDARD PLAN J-60.12-00

SHEET 1 OF 1 SHEET

APPROVED FOR PUBLICATION
STATE DESIGN ENGINEER — DATE
Washington State Department of Transportation

DRAWN BY: LISA CYFORD

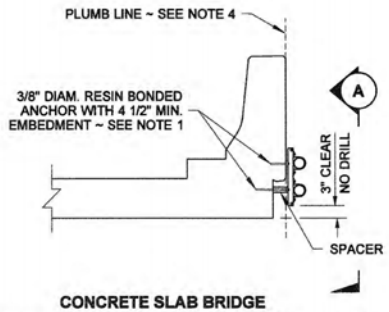

CONCRETE SLAB BRIDGE

(AUTHORIZED ONLY WITH WRITTEN BRIDGE OFFICE APPROVAL, WHERE VERTICAL CLEARANCE IS CONSTRAINED)

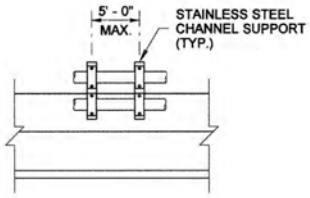

SECTION (A)

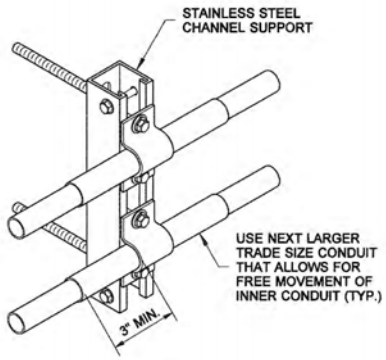

ISOMETRIC VIEW

PVC CONDUIT SUPPORT DETAIL

(FOR UTILITY COMPANY USE - ONLY ALLOWED IN RARE INSTANCES, AUTHORIZED ONLY WITH WRITTEN BRIDGE OFFICE APPROVAL, WHERE VERTICAL CLEARANCE IS CONSTRAINED)

NOTES

1. Drilling through reinforcing steel is not allowed. If steel is hit while drilling, the location shall be moved and the abandoned hole filled with grout conforming to **Standard Specification 6-02.3(20).** There shall be a minimum of a 3" edge distance to the center-line of anchor holes in concrete. Mount the stain-less steel support using an approved resin bonded anchor system. Anchors shall be stainless steel and shall be of 3/8" diameter (expansion anchors are not allowed). Anchor Bolt embedment of 4 1/2" minimum.
2. Number of clamps shall be determined by number of conduits to be attached to the Stainless Steel Channel Support. See Conduit Plans for conduit routing.
3. Add additional Attachment Bolts when required to maintain 8" maximum spacing between adjacent Attachment Bolts.
4. Stainless Steel Channel to be plumb to face of structure. Size spacer to maintain plumb line. When barrier is not plumb, size spacer to maintain back of barrier line.
5. See **Standard Plan J-60.14** for Column Mounting details.

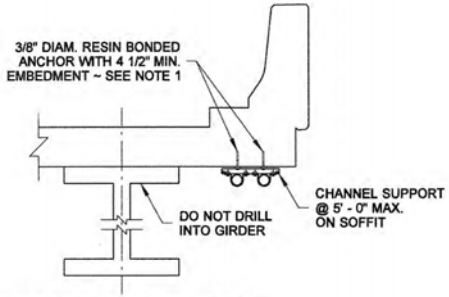

HORIZONTAL CHANNEL MOUNT

(F-SHAPE BARRIER SHOWN APPLY TO ALL BARRIER TYPES)

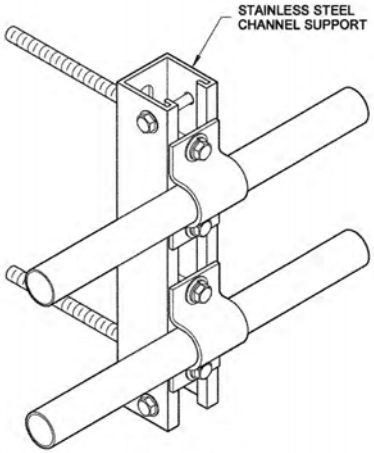

ISOMETRIC VIEW

CONDUIT SUPPORT DETAIL

CONDUIT DIMENSIONS (1)	
NOMINAL TRADE SIZE (IN.)	OUTSIDE DIAMETERS
1/2	0.840
3/4	1.050
1	1.315
1 1/4	1.660
1 1/2	1.900
2	2.375
2 1/2	2.875
3	3.500
3 1/2	4.000
4	4.500
5	5.563
6	6.625

(1) CONDUIT DIAMETERS REFLECT THE DIMENSIONS FOR RIGID GALVANIZED STEEL, SCHEDULE 40 PVC AND SCHEDULE 80 PVC (3 1/2" SCHEDULE 80 PVC IS NOT AVAILABLE)

STRAP THICKNESS CHART	
NOMINAL PIPE SIZE (IN.)	STRAP THICKNESS
1/2 - 2	> OR = 1/8"
> 2 - 5	> OR = 1/4"
6	> OR = 1/4"

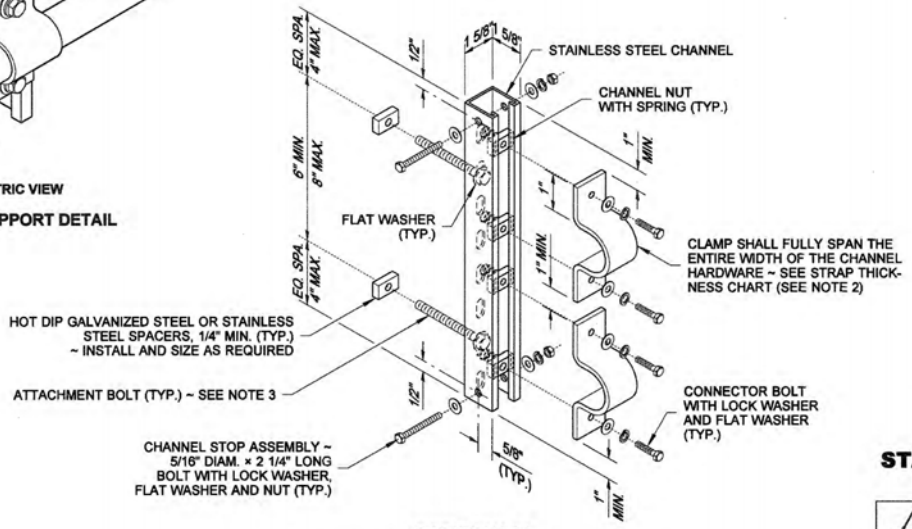

ISOMETRIC VIEW

STAINLESS STEEL CHANNEL SUPPORT DETAIL

(VERTICAL MOUNT SHOWN)

STAINLESS STEEL CHANNEL

STANDARD PLAN J-60.13-00

SHEET 1 OF 1 SHEET

APPROVED FOR PUBLICATION

STATE DESIGN ENGINEER — DATE 6/14/10

Washington State Department of Transportation

DRAWN BY: LISA CYFORD

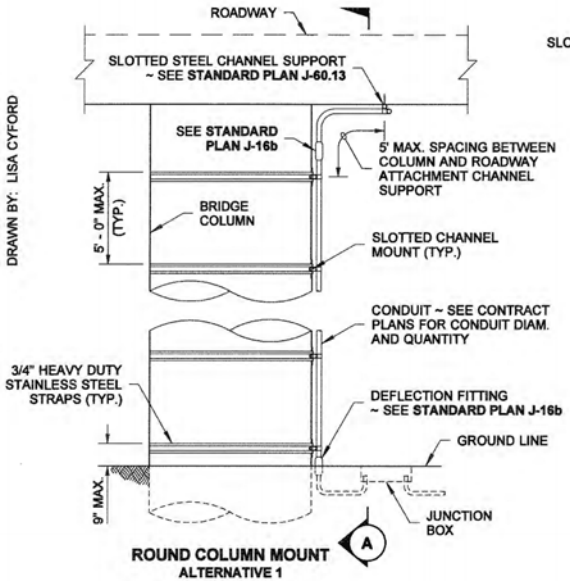

ROUND COLUMN MOUNT
ALTERNATIVE 1

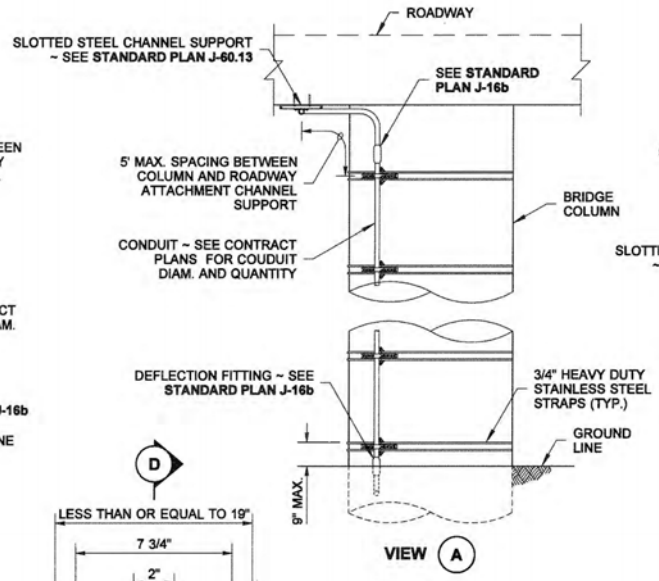

VIEW A

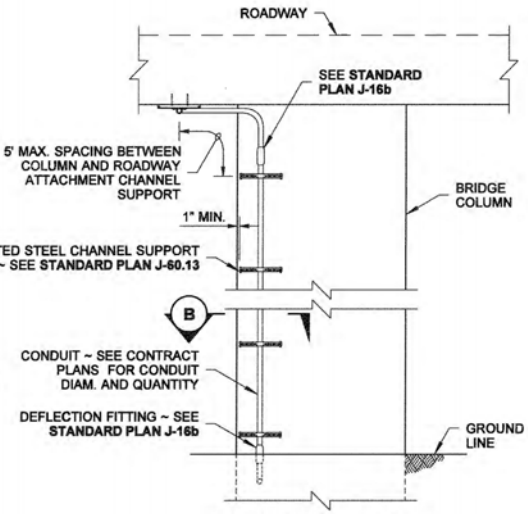

SQUARE COLUMN MOUNT
ALTERNATIVE 2

NOTES

1. See **Standard Plan J-60.13** for Slotted Steel Channel details.
2. Stainless Steel Channel to be plumb to face of structure. Size spacer to maintain plumb line.
3. Slotted Channel mounting plate shall be installed where conduit is routed along column.
4. See Contract Plans for specified Alternative attachment type.

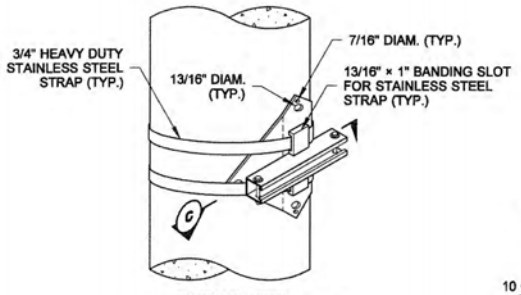

ISOMETRIC VIEW
COLUMN MOUNT DETAILS

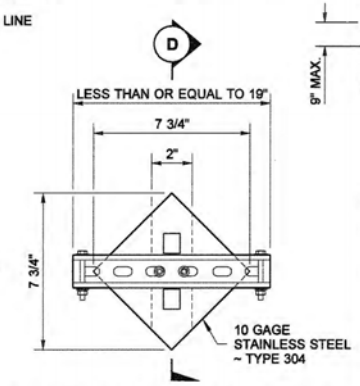

SLOTTED CHANNEL MOUNTING PLATE

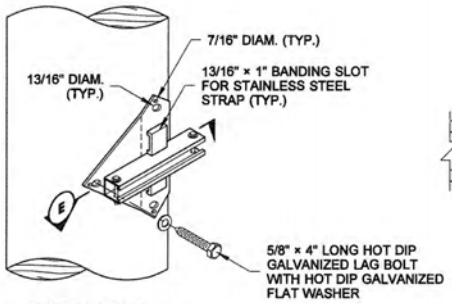

ISOMETRIC VIEW
WOOD POLE MOUNT DETAILS

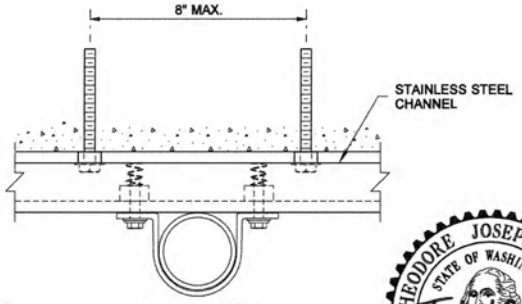

SECTION B
SQUARE COLUMN MOUNT SHOWN

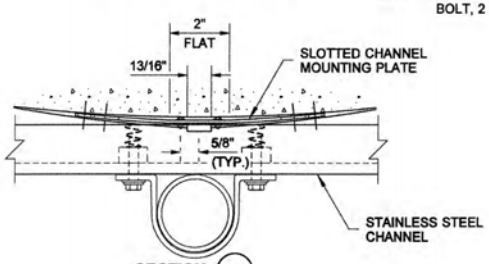

SECTION C

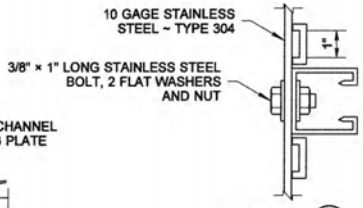

SECTION D

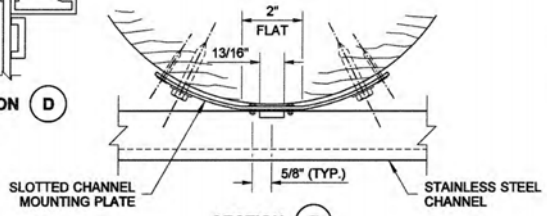

SECTION E

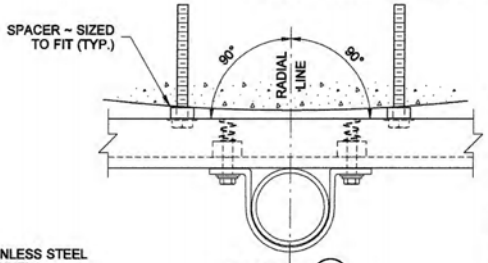

SECTION B
ROUND COLUMN MOUNT SHOWN

THEODORE JOSEPH BAILEY
STATE OF WASHINGTON
39820
REGISTERED PROFESSIONAL ENGINEER
6/8/2010

STAINLESS STEEL CHANNEL MOUNTING DETAILS ON COLUMN OR POLE
STANDARD PLAN J-60.14-00

SHEET 1 OF 1 SHEET

APPROVED FOR PUBLICATION
STATE DESIGN ENGINEER — DATE 6/16/10
Washington State Department of Transportation

DRAWN BY: COLBY FLETCHER

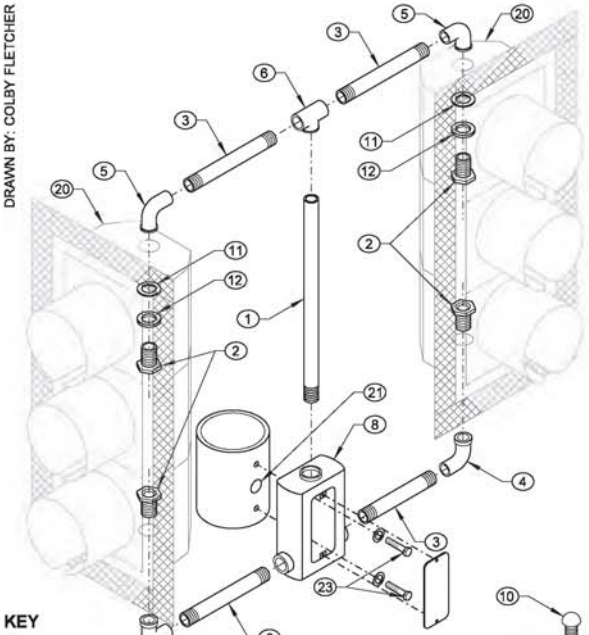

SIDE MOUNT
TYPE A - PEDESTRIAN
TYPE H - VEHICLE

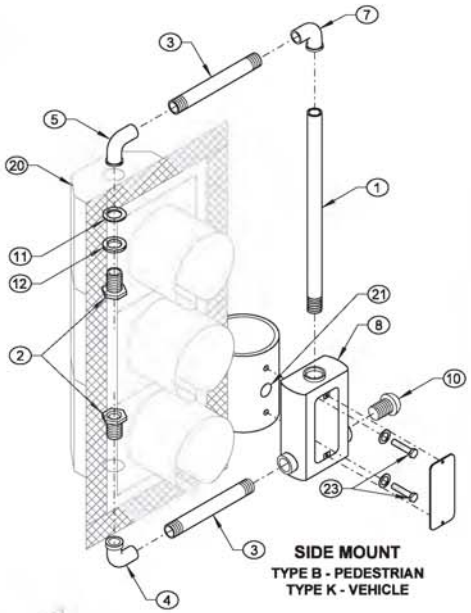

SIDE MOUNT
TYPE B - PEDESTRIAN
TYPE K - VEHICLE

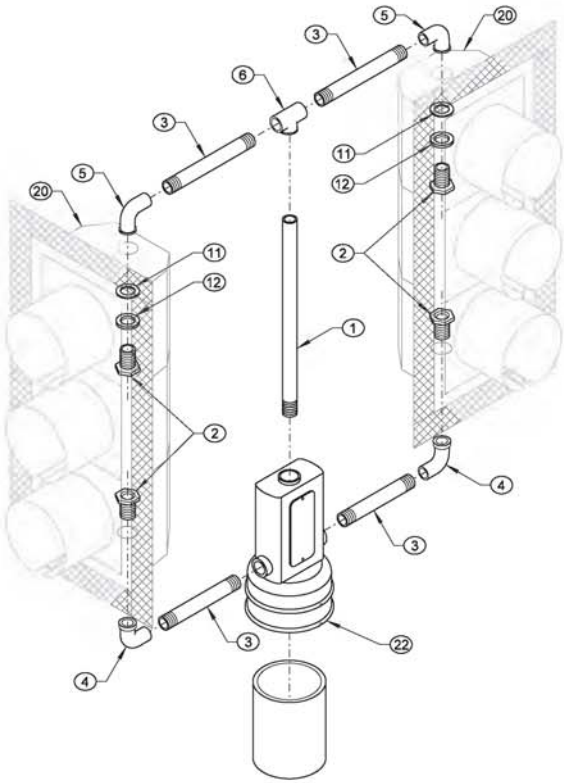

TOP MOUNT
TYPE C - PEDESTRIAN
TYPE F - VEHICLE

KEY

1. CENTER PIPE
2. CHASE NIPPLE
3. NIPPLE
4. SERRATED ELBOW
5. SERRATED OR FLANGED ELBOW
6. REAMED TEE WITH SET SCREW
7. REAMED ELBOW WITH SET SCREW
8. BRONZE TERMINAL COMPARTMENT WITH:
   - GASKETED COVER
   - FASTENERS
   - WIRE LEADS
   - MOUNTING SADDLE FOR SIDE MOUNTS ON ROUND/TAPERED POLES ~ OMIT SADDLE ON MULTI-SIDED POLES
   - 1/4" (IN) DIAM. DRAIN HOLE
   - 12-POSITION TERMINAL STRIP
   - WIREWAY FOR SIDE MOUNTS
9. BRONZE COLLAR ~ 4 1/4" (IN) I.D. OFFSET OPENING W/SET SCREWS
10. ORNAMENT CAP
11. NEOPRENE GASKET
12. WASHER
13. CONDUIT LOCKNUT
14. TYPE E HINGE CLAMSHELL MOUNT ~ LEFT OR RIGHT, SEE CONTRACT
15. FASTENER WITH SPACER ~
    - 1/2" (IN) LAG SCREWS ON WOOD POLE
    - 1/2" (IN) BOLTS TAPPED TO METAL POLE
16. FLATHEAD SOCKET BOLT
17. 1/2" (IN) INSERT HOLE FOR EXTERNAL WIRE ENTRANCE (REQUIRED ON TIMBER POLE MOUNTING ONLY)
18. TERMINAL BLOCK AND PHENOLIC TAG
19. INSULINER ~ 1" (IN) MIN. DIAM. HOLE
20. SIGNAL HEAD WITH BACKPLATE
21. FIELD DRILL POLE AND INSERT AN INSULINER OR SIMILAR DEVICE TO PROTECT CONDUCTORS
22. SIMILAR TO (8) WITH BRONZE INTEGRAL COLLAR
23. 1/2" (IN) DIAM. x 3" (IN) LONG BOLT WITH WASHER

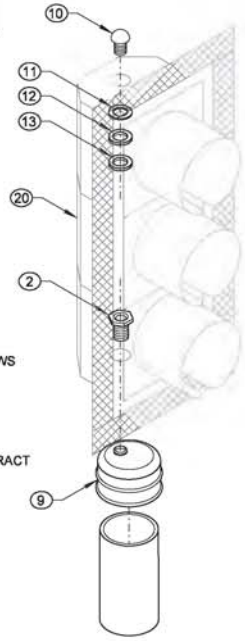

TOP MOUNT
TYPE D - PEDESTRIAN ~ OFFSET BRONZE COLLAR TO FRONT
OR VEHICLE (SHOWN) ~ OFFSET BRONZE COLLAR TO BACK

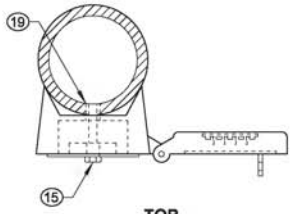

TOP

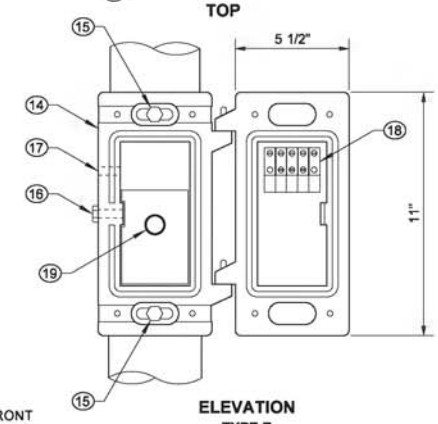

ELEVATION
TYPE E
MOUNTING DETAILS

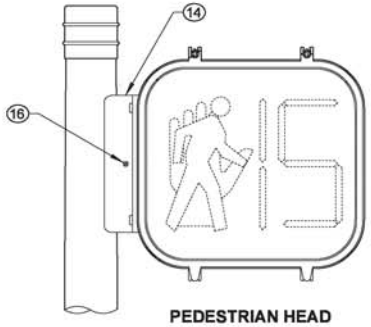

PEDESTRIAN HEAD
SIDE MOUNT
(LEFT SIDE SHOWN)
TYPE E - COUNTDOWN LED
PEDESTRIAN HEAD

NOTES

1. See Contract for head type, mounting height, and orientation.
2. All nipples, fittings, and center pipes shall be 1 1/2" (in) diameter.
3. Install neoprene gasket inside head when flanged elbows are supplied.
4. Extend wire sheath a minimum of 1" (in) inside all signal and sign housings and terminal compartments.
5. Apply bead of silicone to the serrated ring and around the perimeter of all top openings prior to installation of fittings.
6. See **Standard Specification 9-29.16** for backplate requirements. Where required, prismatic sheeting shall be applied in accordance with the manufacturer's recommendations. The application surface of the backplate shall be cleaned, degreased with isopropyl alcohol, and dried prior to application of the sheeting.
7. Drill a 1/4" (in) drain hole in the bottom of each signal display assembly, and one in the bottom of each pedestrian head. When signal display assembly is mounted horizontally, drill a 1/4" (in) drain hole at the lowest point of each section of the signal assembly.

THEODORE JOSEPH BAILEY
STATE OF WASHINGTON
39820
REGISTERED
PROFESSIONAL ENGINEER

Bailey, Ted
Jul 8 2015 3:09 PM

SIGNAL HEAD MOUNTING DETAILS ~ POLE AND POST TOP MOUNTINGS

STANDARD PLAN J-75.10-02

SHEET 1 OF 1 SHEET

APPROVED FOR PUBLICATION
Carpenter, Jeff
Jul 10 2015 7:19 AM
STATE DESIGN ENGINEER
Washington State Department of Transportation

DRAWN BY: COLBY FLETCHER

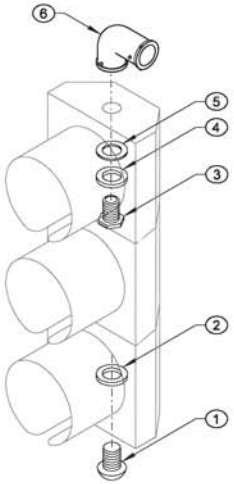

ARM MOUNT
TYPE L

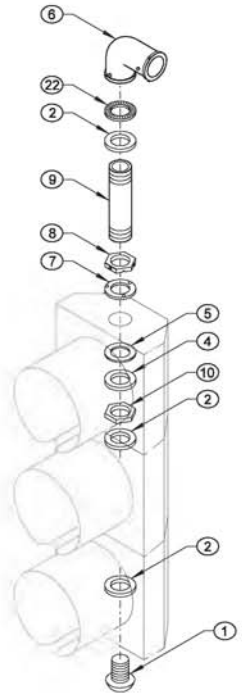

ARM MOUNT
TYPE LE

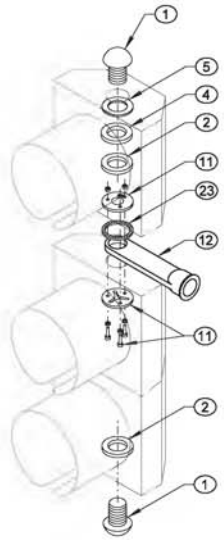

ARM MOUNT
TYPE M

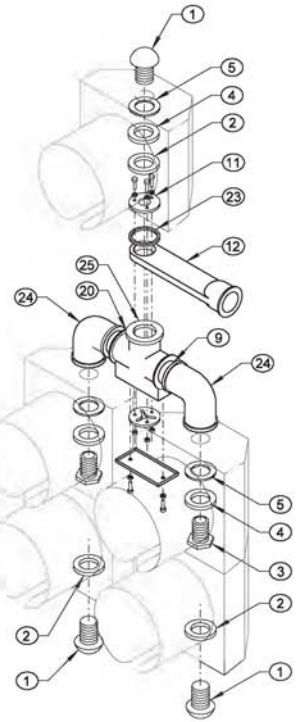

ARM MOUNT
TYPE M-5S
(TYPE M WITH
5-SECTION HEAD)

KEY

1. END CAP
2. 1 1/2" (IN) DIAM. CONDUIT LOCKNUT
3. 1 1/2" (IN) DIAM. CHASE NIPPLE
4. STEEL WASHER
5. NEOPRENE GASKET
6. BRONZE SERRATED ELL FITTING WITH:
   - 3/8" (IN) STAINLESS STEEL THROUGH BOLT AND NUTS
   - THREE STAINLESS STEEL SET SCREWS AT SLIPFITTER CONNECTION
   - THREE ALLEN HEAD STAINLESS STEEL SET SCREWS AT CONDUIT NIPPLE CONNECTION
7. SERRATED RING WITH PINS
8. HEX LOCKNUT WITH:
   - TWO ALLEN HEAD STAINLESS STEEL SET SCREWS
   - PIN RECEPTACLES
9. 1 1/2" (IN) DIAM. CONDUIT NIPPLE
10. 1 1/2" (IN) DIAM. HEX LOCKNUT
11. MOUNTING ASSEMBLY
12. BRONZE ELEVATOR PLUMBIZER WITH 3/8" (IN) STAINLESS STEEL THROUGH BOLT, WASHERS, AND TWO NUTS
13. ALUMINUM ARM WITH SET SCREW
14. SLOTTED TUBE WITH CLOSURE STRIP
15. 2 1/2" (IN) I.D. MIN. TUBE CLAMP
16. INTERNALLY THREADED CLAMP ASSEMBLY WITH:
    - TWO SET SCREWS
    - 1/2" (IN) × 0.045" (IN) STAINLESS STEEL BANDS
    - 7/16" (IN) SCREW BUCKLES WITH SWIVELS, NUTS, AND WASHERS
    - BAND CLIPS WITH ALLEN HEAD STAINLESS STEEL SET SCREWS
17. BRONZE MESSENGER HANGER WITH:
    - 1/2" (IN) DIAM. J-BOLTS
    - CABLE LOCK BAR
    - RIVET
    - COTTER KEY
18. BRONZE INTERNALLY THREADED WIRE ENTRANCE WITH:
    - BUSHING INSERT OR RUBBER GROMMET
    - ALLEN HEAD STAINLESS STEEL SET SCREW
19. BRONZE BALANCE ADJUSTER (WHERE REQUIRED)
20. MULTI-HEAD MOUNTING ASSEMBLY
21. LOWER ARM ASSEMBLY
22. SERRATED RING WITH NO PINS
23. SERRATED WASHER
24. 1 1/2" (IN) DIAM. SERRATED OR FLANGED ELBOW
25. CENTER SUPPORT WITH 1 1/2" (IN) DIAM. HUBS WITH COVER AND GASKET
26. 1 1/2" (IN) DIAM. SERRATED COUPLING
27. 1 1/2" (IN) BREAKAWAY TETHER ASSEMBLY WITH OPTIONAL EXTENDER BAR
28. SERRATED CROSS

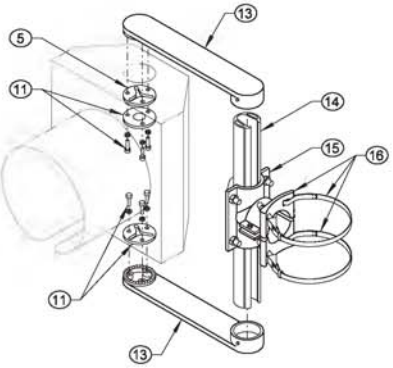

ARM MOUNT
TYPE N

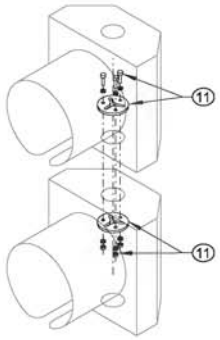

HOUSING FIXTURE
CONNECTION DETAIL

NOTES

1. Type M mounting shall have "O" ring groove and seal on top and bottom of signal attachment.
2. Type M mounting for conventional heads shall have a 2" (in) diameter opening at the signal attachment.
3. Type M mounting for optically programmed heads shall have a 3 1/2" (in) diameter opening at the signal attachment.
4. Type N mounting with optically programmed heads shall be installed with 14" (in) nominal arms.
5. See **Standard Plan J-75.30** for tether wire and backplate requirements.
6. Apply bead of silicone around the perimeter of all top end cap openings prior to installation of the end cap assembly.
7. See **Standard Specification 9-29.16** for backplate requirements. Where required, prismatic sheeting shall be applied in accordance with the manufacturer's recommendations. The application surface of the backplate shall be cleaned, degreased with isopropyl alcohol, and dried prior to application of the sheeting.
8. Drill a 1/4" (in) drain hole in the bottom of each signal assembly. When signal display assembly is mounted horizontally, drill a 1/4" (in) drain hole at the lowest point of each section of the signal assembly.

NOTE: BACKPLATES NOT SHOWN FOR CLARITY

Bailey, Ted
Jul 8 2015 3:10 PM

SIGNAL HEAD MOUNTING DETAILS ~ MAST ARM AND SPAN WIRE MOUNTINGS

STANDARD PLAN J-75.20-01

SHEET 1 OF 2 SHEETS

APPROVED FOR PUBLICATION
Carpenter, Jeff
Jul 10 2015 7:18 AM
STATE DESIGN ENGINEER

Washington State Department of Transportation

DRAWN BY: COLBY FLETCHER

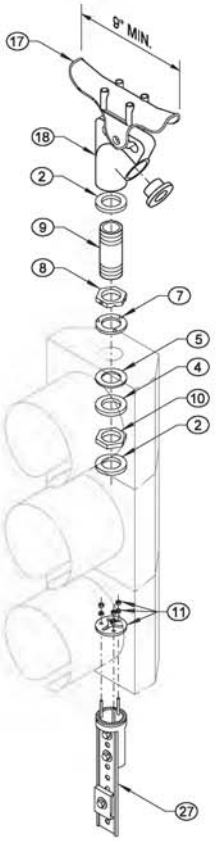

SPAN WIRE
TYPE P (1 HEAD)

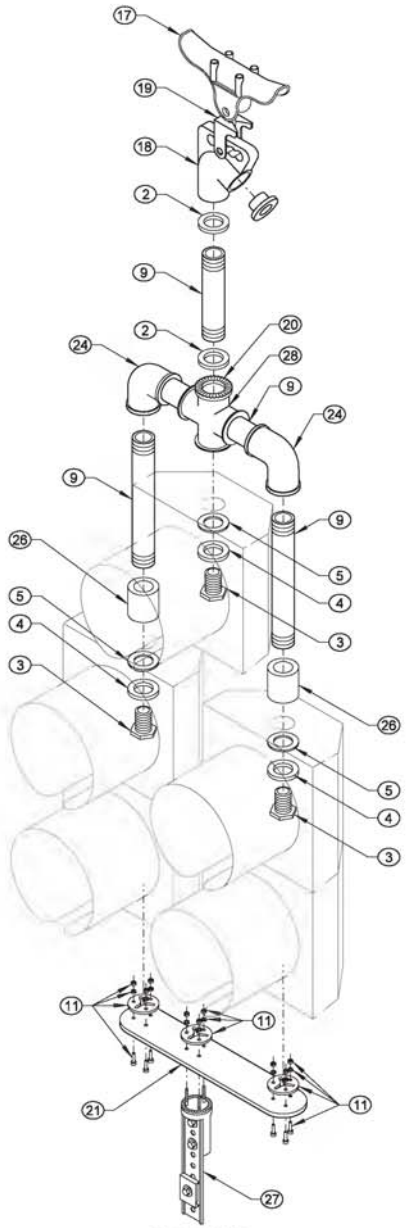

SPAN WIRE
TYPE P-5S
(TYPE P WITH 5-SECTION HEAD)

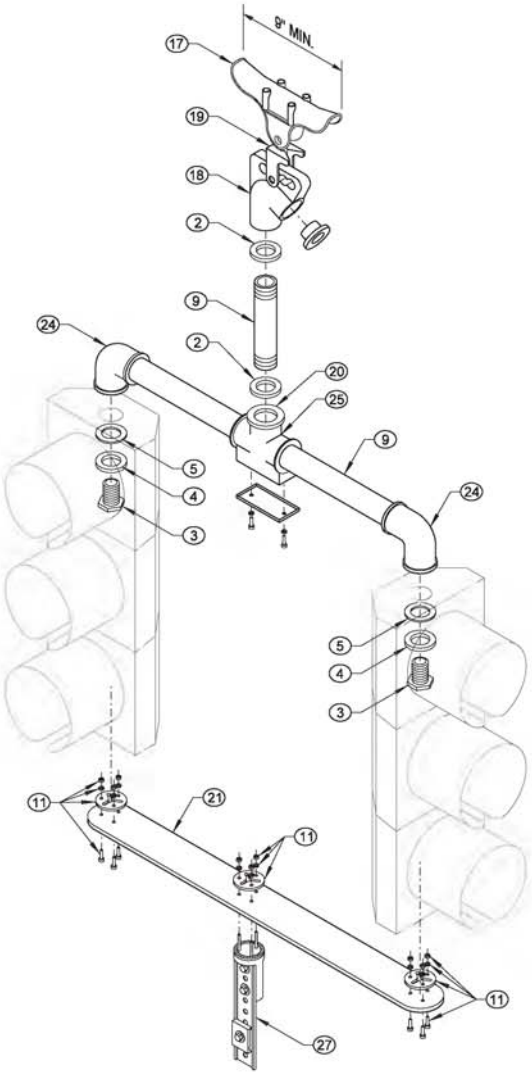

SPAN WIRE
TYPE Q (2 HEADS)
TYPE R (3 HEADS)
TYPE S (4 HEADS)

NOTE: BACKPLATES NOT SHOWN FOR CLARITY

THEODORE JOSEPH BAILEY
STATE OF WASHINGTON
39820
REGISTERED
PROFESSIONAL ENGINEER

Bailey, Ted
Jul 8 2015 3:10 PM

SIGNAL HEAD MOUNTING DETAILS ~ MAST ARM AND SPAN WIRE MOUNTINGS

STANDARD PLAN J-75.20-01

SHEET 2 OF 2 SHEETS

APPROVED FOR PUBLICATION
Carpenter, Jeff
Jul 10 2015 7:18 AM
STATE DESIGN ENGINEER

Washington State Department of Transportation

KEY

1. METAL OR TIMBER POLE
2. 2" (IN) x 3/16" (IN) S.S. TETHER WIRE BAND WITH TWO EACH:
   - 3/8" (IN) - 16 NC x 3/4" (IN) S.S. HEX HEAD BOLT
   - LOCK WASHERS AND NUTS
3. 5/16" (IN) EYE AND EYE TURNBUCKLE
4. 3/8" (IN) MILD STEEL S-HOOK
5. 1/8" (IN) S.S. WIRE ROPE CLAMP (U-BOLT TYPE)
6. 1/8" (IN) S.S. TETHER WIRE
7. 1 1/2" (IN) BREAKAWAY TETHER ASSEMBLY WITH OPTIONAL EXTENDER BAR
8. SIGNAL HEAD
9. 6 x 8.2 LB/FT CHANNEL
10. TWO EACH:
    - 1/2" (IN) - 13 NC x 2 1/2" (IN) S.S. HEX HEAD BOLT
    - LOCK WASHERS (DRILL AND TAP POLE TO ACCEPT)
11. WIREWAY (SEE DETAIL THIS SHEET)
12. METAL POLE
13. CABINET
14. END BUSHING
15. SEALING LOCKNUT
16. WIRE ROPE THIMBLE
17. CABINET WALL DRILLED 1/8" (IN) OVERSIZE OF NIPPLE
18. CHANNEL DRILLED 1/8" (IN) OVERSIZE OF NIPPLE
19. 2" (IN) DIAM. x 4" (IN) NIPPLE (UNLESS OTHERWISE NOTED)
20. POLE WALL DRILLED SO BUSHING WILL PASS THROUGH ~ HOLE SIZE TO BE A MAXIMUM OF 1/8" (IN) LARGER DIAMETER THAN THE CONDUIT NIPPLE END BUSHING ~ INSTALL NIPPLE IN POLE WITH BUSHING INSTALLED
21. 6063 EXTRUDED ALUMINUM FRAME BLANK OUT SIGN WITH VISOR
22. LIGHT EMITTING DIODE (LED) BLANK OUT SIGN
23. TRANSLUCENT PLEXIGLASS SIGN FACE ~ SEE CONTRACT FOR LEGEND
24. 1 1/2" (IN) CAST IRON HUB WITH 5/16" (IN) PIN AND COTTER KEY
25. SPAN WIRE MOUNT ASSEMBLY WITH:
    - 1 1/2" (IN) DIAM. CONDUIT LOCKNUT
    - 1 1/2" (IN) DIAM. CONDUIT NIPPLE
    - BRONZE MESSENGER HANGER WITH:
      - ~ 1/2" (IN) DIAM. J-BOLTS
      - ~ CABLE LOCK BAR
      - ~ RIVET
      - ~ COTTER KEY
    - BRONZE INTERNALLY THREADED WIRE ENTRANCE WITH:
      - ~ BUSHING INSERT
      - ~ ALLEN HEAD S.S. SET SCREW
26. ARM MOUNT ASSEMBLY WITH:
    - 1 1/2" (IN) DIAM. CONDUIT LOCKNUT
    - BRONZE SERRATED ELL FITTING WITH:
      - ~ 3/8" (IN) S.S. THROUGH BOLT AND NUTS
      - ~ THREE S.S. SET SCREWS AT SLIPFITTER CONNECTION
      - ~ THREE ALLEN HEAD S.S. SET SCREWS AT CONDUIT NIPPLE CONNECTION
    - 1 1/2" (IN) DIAM. CONDUIT NIPPLE
    - SERRATED RING WITH NO PINS
27. SIDE POLE MOUNT ASSEMBLY WITH:
    - 1 1/2" (IN) DIAM. CONDUIT LOCKNUT
    - 1 1/2" (IN) DIAM. CONDUIT NIPPLE
    - SERRATED RING WITH NO PINS
28. 1 1/2" (IN) SERRATED ELBOW
29. 1 1/2" (IN) DIAM. NIPPLE (DRILL AND TAP POLE TO ACCEPT)
30. TWO EACH:
    - 1/2" (IN) - 20 NF x 3/4" (IN) S.S. HEX HEAD BOLT
    - LOCK WASHERS (DRILL AND TAP POLE TO ACCEPT)
31. MOUNTING BRACKET
32. LOCKNUT

LEGEND:
S.S. = STAINLESS STEEL

DRAWN BY: COLBY FLETCHER

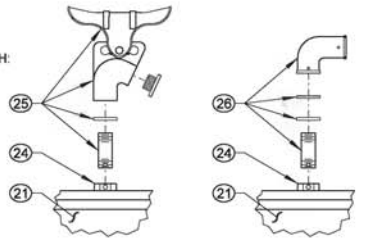

SPAN WIRE MOUNT **MAST ARM MOUNT**

INTERNALLY ILLUMINATED SIGN MOUNTING DETAILS

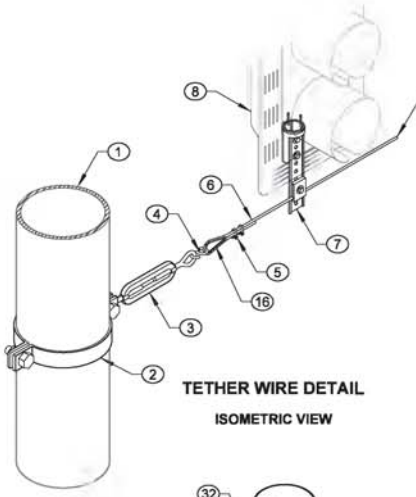

TETHER WIRE DETAIL

ISOMETRIC VIEW

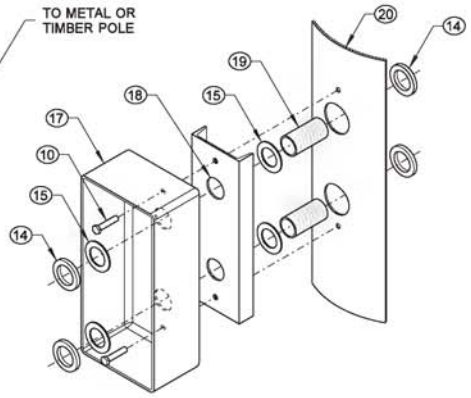

WIREWAY DETAIL

ISOMETRIC VIEW

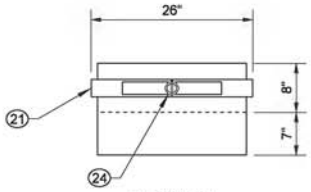

PLAN VIEW

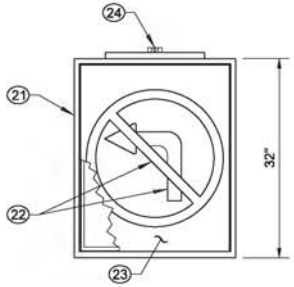

ELEVATION VIEW

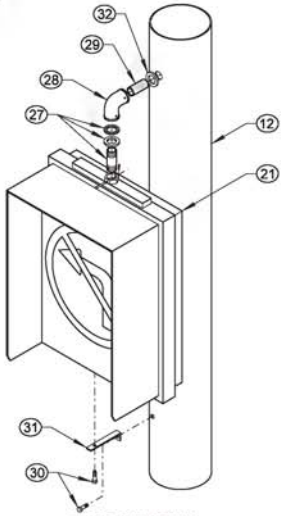

SIDE POLE MOUNT

ISOMETRIC VIEW

INTERNALLY ILLUMINATED SIGN MOUNTING DETAILS

SCOOP **FULL CIRCLE** **TUNNEL** **CAP OR CUTOFF** **ANGLE**

45° SHOWN ~ SEE CONTRACT PLANS FOR ANGLE AND LENGTH "L"

VISORS

PERSPECTIVE VIEWS

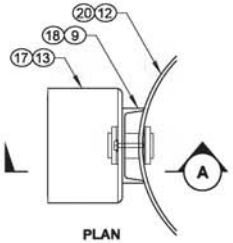

PLAN

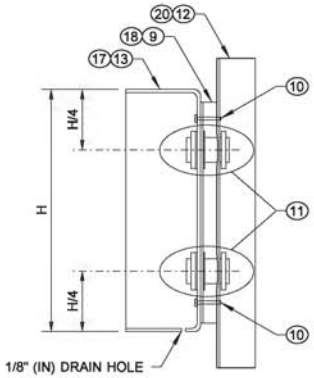

SECTION A

ELEVATION VIEW

CABINET MOUNTING DETAILS

NOTES

1. Backplates shall be installed with stainless steel screws and stainless steel washers.
2. Silicone top of channel and around nipples at openings into pole.
3. Breakaway tether extender bar shall extend one hole and one flat past tether wire.

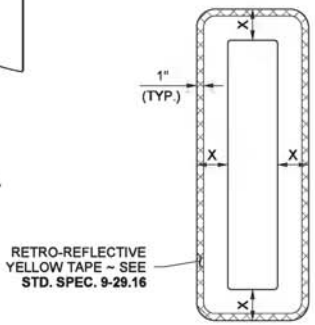

BACKPLATE DETAIL

8" (IN) OR 12" (IN) SECTIONS

8" (IN) SECTION X = 5 1/2" (IN) ± 1/2" (IN)
12" (IN) SECTION X = 5 1/2" (IN) ± 1/2" (IN)

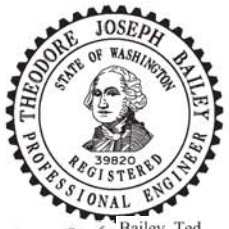

Bailey, Ted
Jul 8 2015 3:12 PM

MISCELLANEOUS SIGNAL DETAILS

STANDARD PLAN J-75.30-02

SHEET 1 OF 1 SHEET

APPROVED FOR PUBLICATION
Carpenter, Jeff
Jul 10 2015 7:17 AM
STATE DESIGN ENGINEER
Washington State Department of Transportation

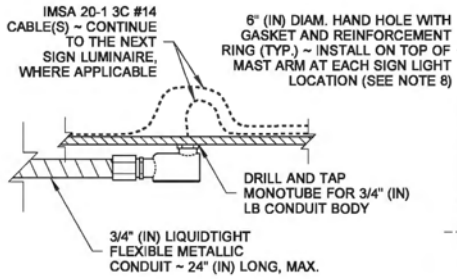

DETAIL (A)

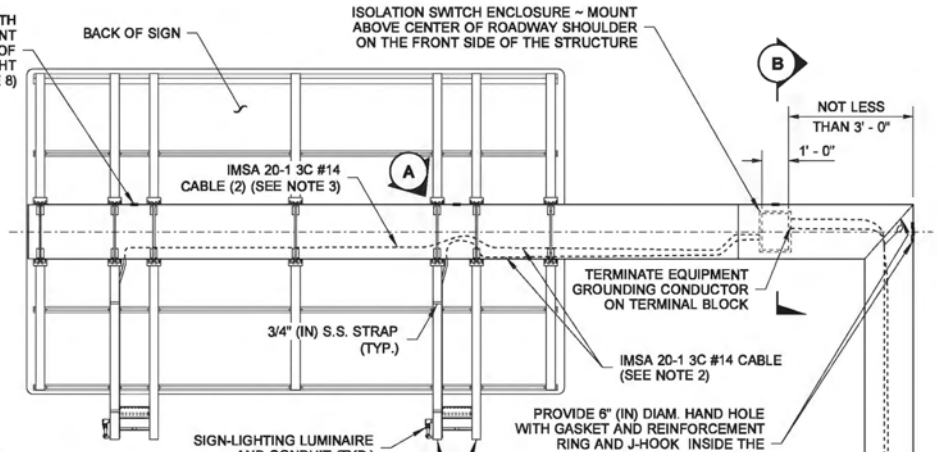

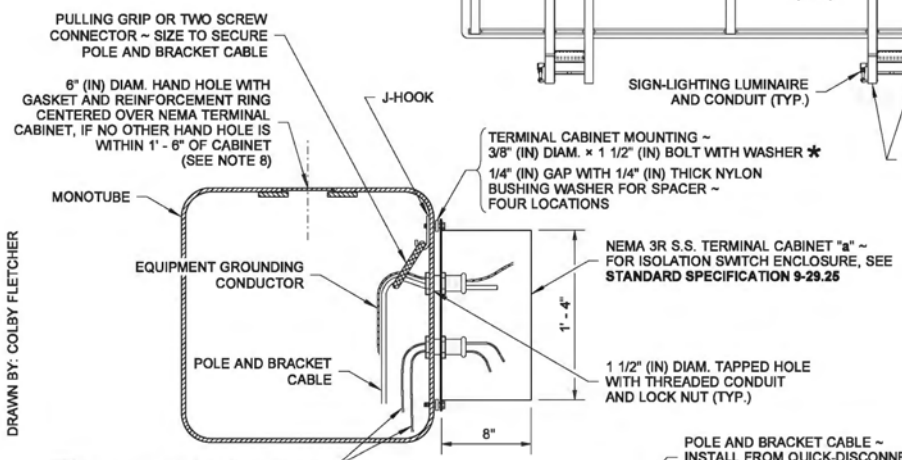

SECTION (B)

DRAWN BY: COLBY FLETCHER

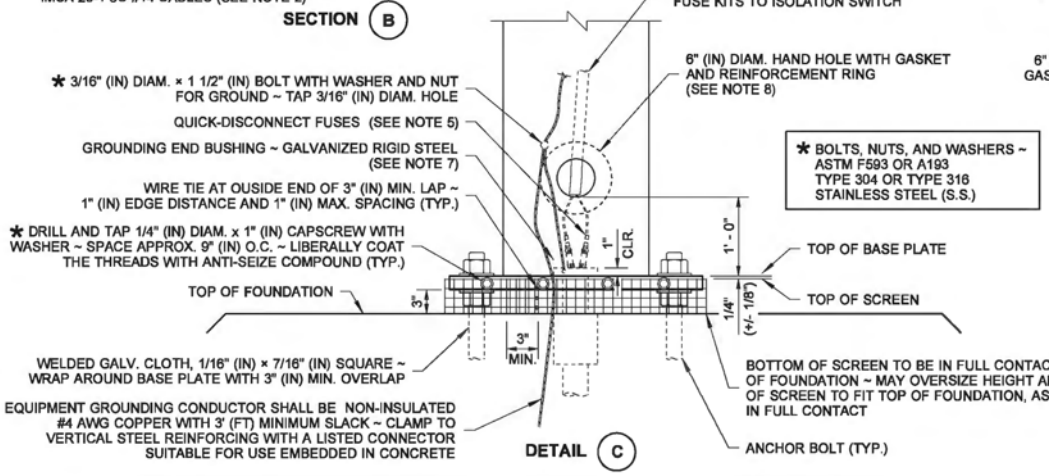

* BOLTS, NUTS, AND WASHERS ~ ASTM F593 OR A193 TYPE 304 OR TYPE 316 STAINLESS STEEL (S.S.)

DETAIL (C)

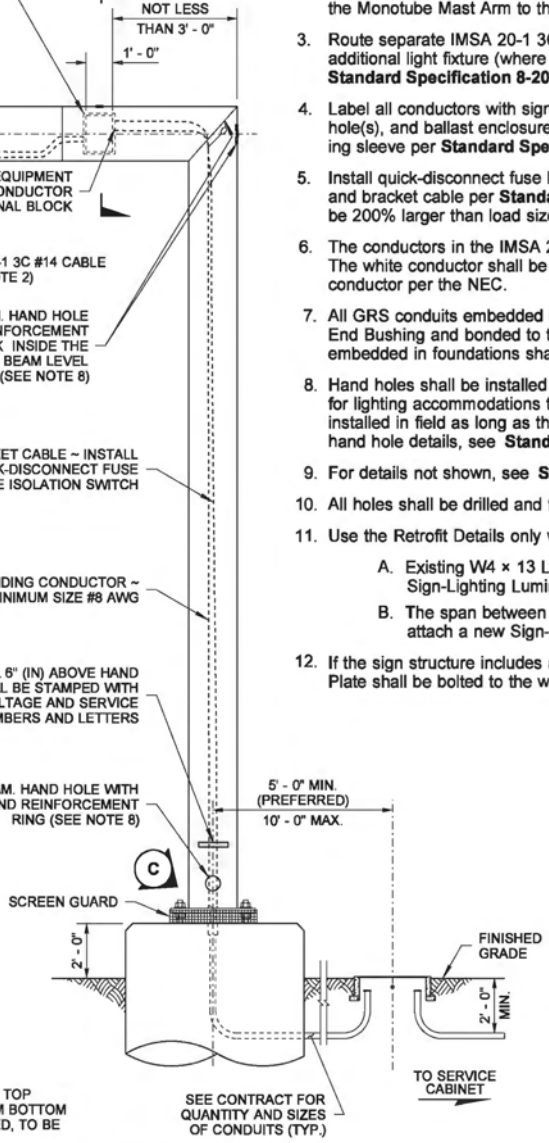

MONOTUBE SIGN STRUCTURE

(SEE CONTRACT FOR ORIENTATION OF SIGN STRUCTURE)

NOTES

1. Typical view shown. Verify power source location, quantities, location of signs, and sign structure fixtures in Contract Plans.
2. Route IMSA 20-1 3C #14 cable(s) from isolation switch along inside bottom of the Monotube Mast Arm to the liquidtight conduit connector(s) at hand hole(s).
3. Route separate IMSA 20-1 3C #14 cable from load side of terminal strip to each additional light fixture (where applicable) and provide sufficient slack wire per **Standard Specification 8-20.3(8).**
4. Label all conductors with sign light and circuit number at isolation switch, hand hole(s), and ballast enclosure(s). Labels shall be a PVC or Polyolefin wire marking sleeve per **Standard Specification 9-29.**
5. Install quick-disconnect fuse kits between the power supply wires and the pole and bracket cable per **Standard Specification 9-29.7.** Fuse size shall be 200% larger than load size.
6. The conductors in the IMSA 20-1 3C #14 cable shall be black, red, and white. The white conductor shall be permanently identified as an equipment grounding conductor per the NEC.
7. All GRS conduits embedded in foundation shall be terminated with Grounding End Bushing and bonded to the Foundation Grounding Bus. All PVC conduits embedded in foundations shall be terminated with End Bell Bushing.
8. Hand holes shall be installed at the time of fabrication. Only additional conduits for lighting accommodations to previously non-illuminated structures may be installed in field as long as the proper repairs are made to the structure. For hand hole details, see **Standard Plan J-75.41**.
9. For details not shown, see **Standard Plan G-90.40**.
10. All holes shall be drilled and tapped.
11. Use the Retrofit Details only when the following conditions apply:
    A. Existing W4 × 13 Luminaire Brackets are to be reused for a new Sign-Lighting Luminaire.
    B. The span between the existing Luminaire Brackets is too wide to attach a new Sign-Lighting Luminaire and Luminaire Mounting Plate.
12. If the sign structure includes a maintenance walkway, the Luminaire Mounting Plate shall be bolted to the walkway grating.

THEODORE JOSEPH BAILEY
STATE OF WASHINGTON
39820
REGISTERED
PROFESSIONAL ENGINEER

Theodore Joseph Bailey
Bailey, Ted
Jun 11 2014 9:56 AM

OVERHEAD SIGN ELECTRICAL DETAILS (MONOTUBE STRUCTURE) STANDARD PLAN J-75.40-01

SHEET 1 OF 2 SHEETS

APPROVED FOR PUBLICATION

Bakotich, Pasco
Jun 11 2014 1:37 PM

STATE DESIGN ENGINEER

Washington State Department of Transportation

DRAWN BY: COLBY FLETCHER

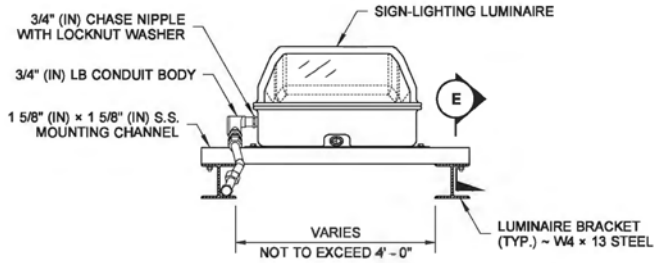

SECTION D

SIGN-LIGHTING FIXTURE WITH RETROFIT

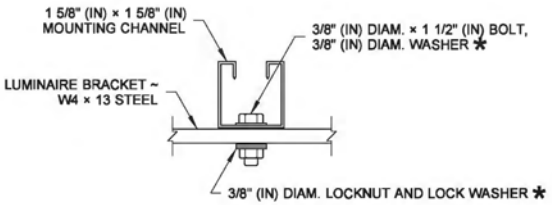

SECTION E

* BOLTS, NUTS, AND WASHERS ~ ASTM F593 OR A193 TYPE 304 OR TYPE 316 STAINLESS STEEL (S.S.)

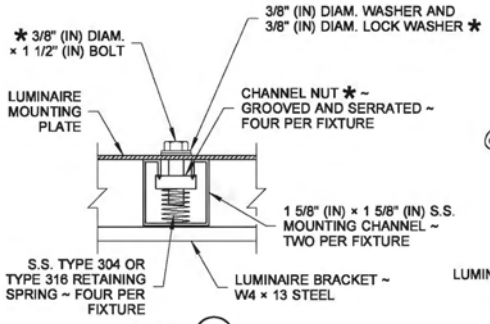

DETAIL F

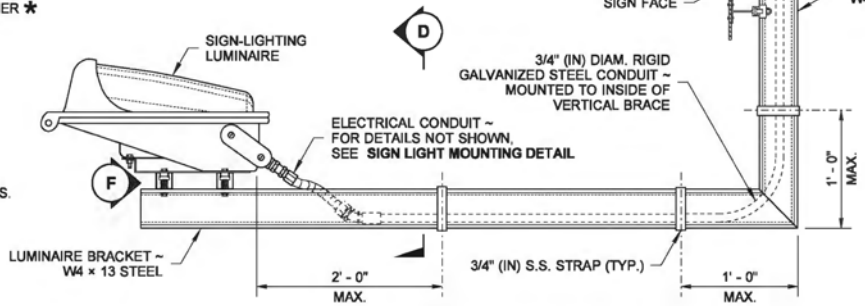

RETROFIT MOUNTING DETAIL

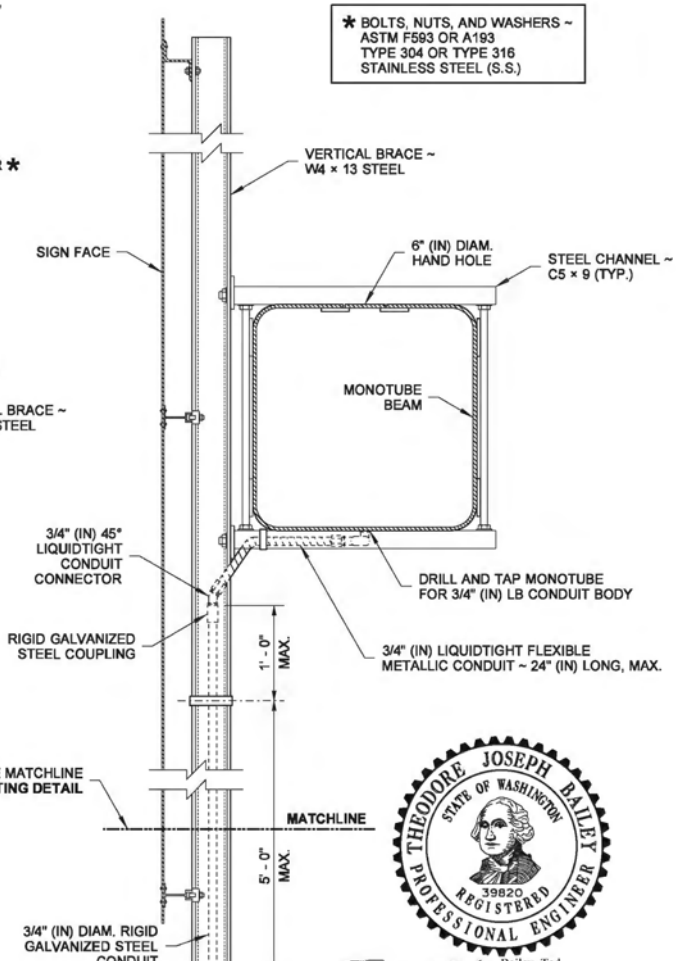

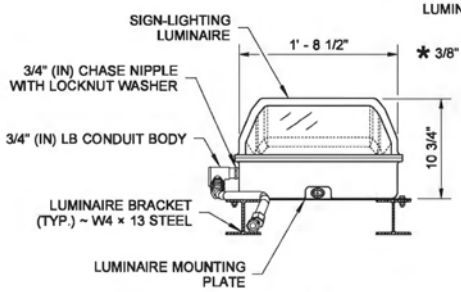

SECTION G

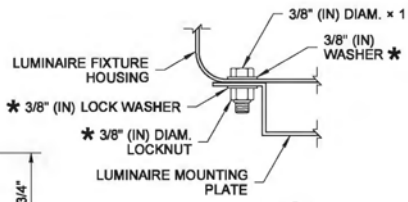

DETAIL H

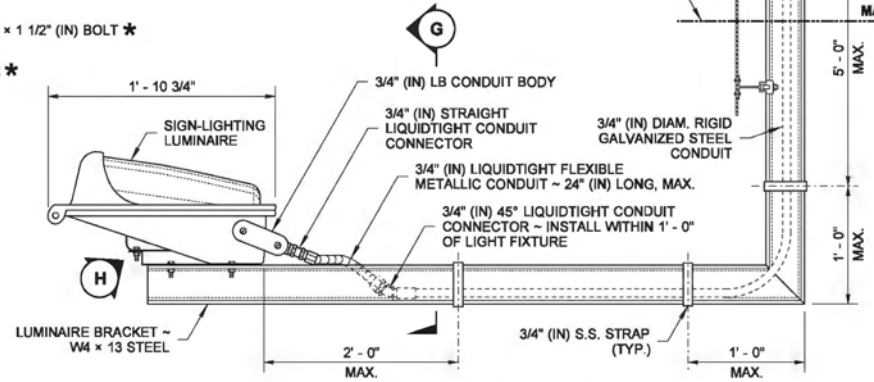

SIGN LIGHT MOUNTING DETAIL

Bailey, Ted
Jun 11 2014 9:57 AM

OVERHEAD SIGN ELECTRICAL DETAILS (MONOTUBE STRUCTURE) STANDARD PLAN J-75.40-01

SHEET 2 OF 2 SHEETS

APPROVED FOR PUBLICATION

Bakotich, Pasco
Jun 11 2014 1:37 PM

STATE DESIGN ENGINEER

Washington State Department of Transportation

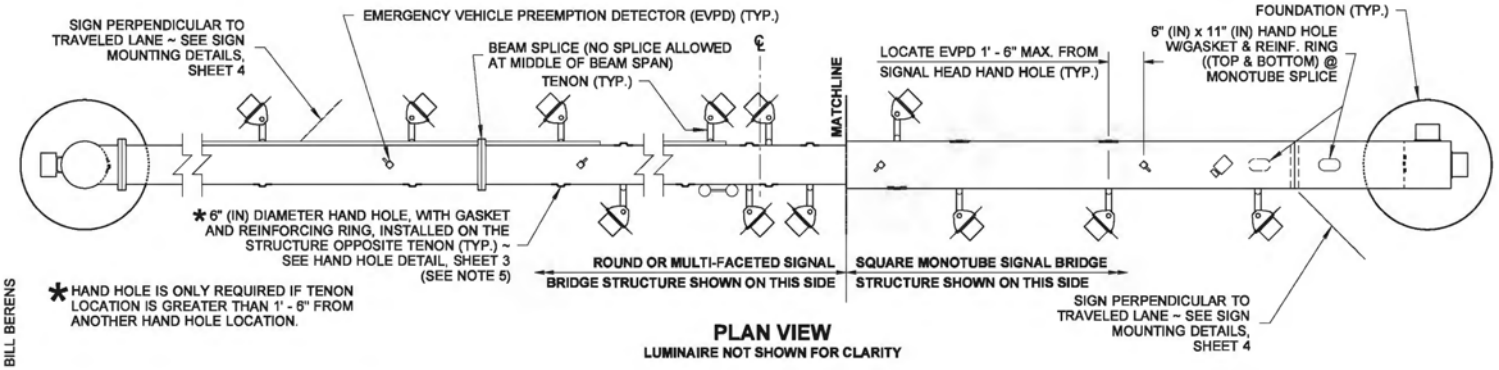

PLAN VIEW

LUMINAIRE NOT SHOWN FOR CLARITY

DRAWN BY: BILL BERENS

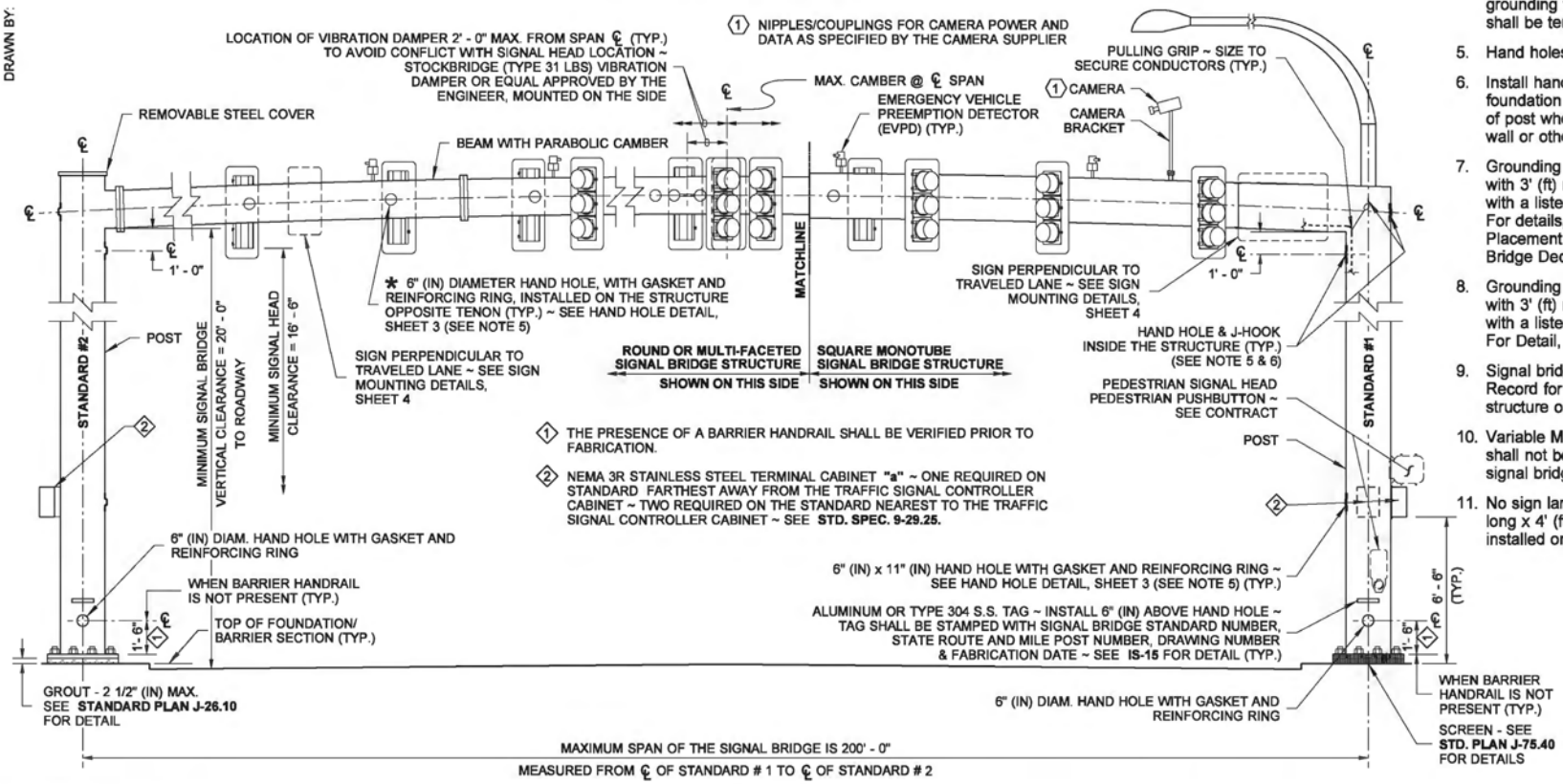

ELEVATION VIEW

DESIGN CRITERIA

SIGNAL BRIDGE SHALL BE DESIGNED AND ANALYZED IN ACCORDANCE WITH **AASHTO STANDARD SPECIFICATION FOR STRUCTURAL SUPPORTS FOR HIGHWAY SIGNS, LUMINAIRE AND TRAFFIC SIGNAL - FIFTH EDITION - DATED 2009** AND INTERIMS. USING BASIC WIND SPEED OF **90 MPH** AND **50 YEARS** OF DESIGN LIFE. FATIGUE DESIGN OF THE STRUCTURE CONFORMS TO **FATIGUE CATEGORY I** OF THE SPECIFIED AASHTO STANDARD SPECIFICATION.

NOTES

1. Typical view shown. See Contract Plans for quantities and locations of signal heads, EVP detectors, cameras, and signs.
2. Route signal cable(s) from terminal cabinet along inside bottom of the Signal Bridge to the Tenon(s) connector(s) at hand hole(s). Provide sufficient slack wire to allow the conductor or cable to be pulled a minimum of 18" (in) outside the Signal Bridge at the nearest hand hole to the equipment connection point.
3. All conductors shall be labeled in accordance with **Standard Specification 8-20.3(8)**. Labels shall be provided at the terminal cabinet (at the terminal board and conduits), equipment terminals, and at the hand hole nearest equipment connection point.
4. All RMC conduits embedded in foundation shall be terminated with a grounding end bushing and bonded to the structure grounding terminal. All PVC conduits embedded in foundations shall be terminated with end bell bushing.
5. Hand holes shall be installed at the time of fabrication.
6. Install hand hole on outside of the post at beam level when foundation is cast at grade. Install hand hole on traffic side of post when signal bridge is mounted on bridge, retaining wall or other structure.
7. Grounding conductor shall be non-insulated # 4 AWG copper with 3' (ft) minimum slack. Clamp to horizontal steel reinforcing with a listed connector suitable for use embedded in concrete. For details, see Elevation View Signal Bridge Hand Hole Placement on Standard, Sheet 2. Or see Foundation Detail in Bridge Deck or Bridge Deck Island, Sheet 2.
8. Grounding conductor shall be non-insulated #4 AWG copper with 3' (ft) minimum slack. Clamp to vertical steel reinforcing with a listed connector suitable for use embedded in concrete. For Detail, see Partial Foundation Detail, Sheet 2.
9. Signal bridge foundation shall be designed by the Engineer of Record for all installations (at grade, mounted on a bridge structure or on a wall structure).
10. Variable Message Signs (VMS) shall not be installed on signal bridge.
11. No sign larger than 12' (ft) long x 4' (ft) tall shall be installed on signal bridge.

Bailey, Ted
Jun 11 2014 9:58 AM

SIGNAL BRIDGE STANDARD ELECTRICAL DETAILS

STANDARD PLAN J-75.41-00

SHEET 1 OF 4 SHEETS

APPROVED FOR PUBLICATION
Bakotich, Pasco
Jun 11 2014 1:38 PM
STATE DESIGN ENGINEER DATE

Washington State Department of Transportation

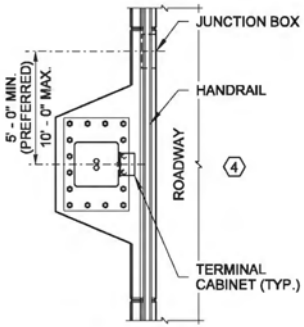

PLAN VIEW

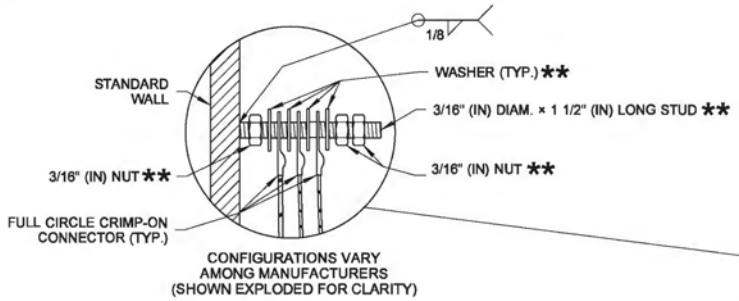

CONFIGURATIONS VARY AMONG MANUFACTURERS (SHOWN EXPLODED FOR CLARITY)

** BOLTS, NUTS, AND WASHERS ~ ASTM F593 OR A193 TYPE 304 OR TYPE 316 STAINLESS STEEL (S.S.)

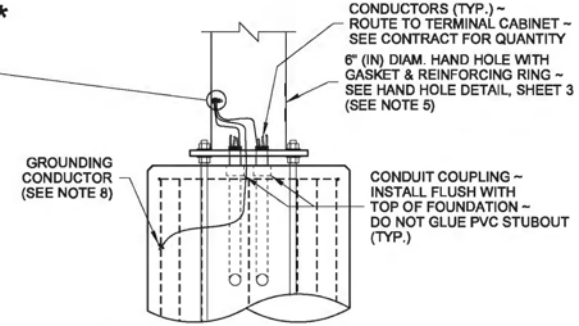

PARTIAL FOUNDATION DETAIL

(GROUT PAD/SCREEN NOT SHOWN FOR CLARITY)

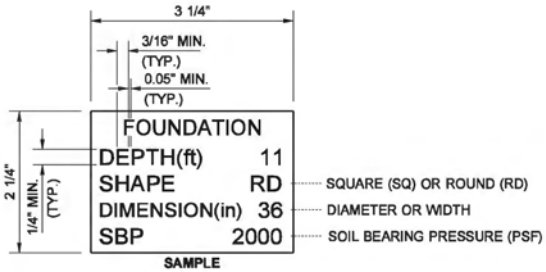

SIGNAL FOUNDATION IDENTIFICATION TAG DETAIL

TEXT SHALL BE ENGRAVED 0.014" (IN) DEEP

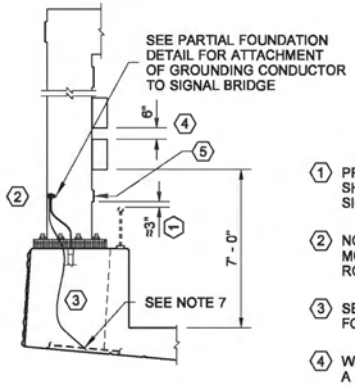

ELEVATION VIEW

WITH HANDRAIL (SQUARE MONOTUBE SHOWN ~ ROUND OR MULTI-FACETED SIMILAR)

1. PRESENCE OF A BARRIER HANDRAIL SHALL BE VERIFIED PRIOR TO SIGNAL BRIDGE FABRICATION
2. NO TERMINAL CABINET SHALL BE MOUNTED ON SIDE OPPOSITE THE ROADWAY
3. SEE BRIDGE SHEETS FOR FOUNDATION DESIGN
4. WHEN SIGNAL BRIDGE IS MOUNTED ON A STRUCTURE TERMINAL CABINETS SHALL BE MOUNTED ON THE TRAFFIC SIDE OF THE POST AS SHOWN
5. 6" (IN) DIAM. HAND HOLE WITH GASKET AND REINFORCING RING

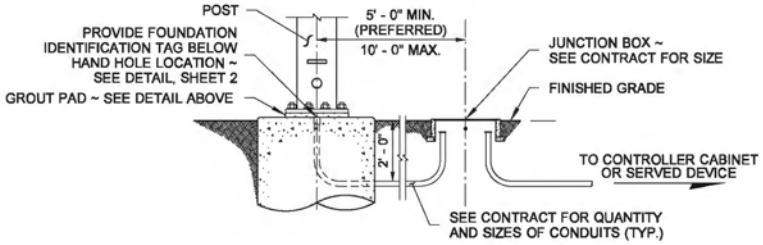

SEE **STANDARD PLAN J-26.15** FOR FOUNDATION PLACEMENT DETAILS

PARTIAL FOUNDATION TO JUNCTION BOX DETAIL

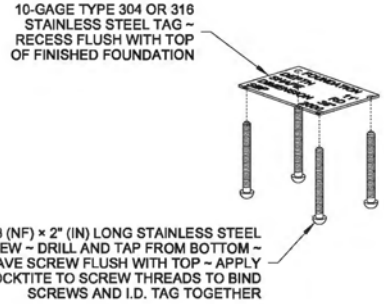

IDENTIFICATION TAG DETAIL

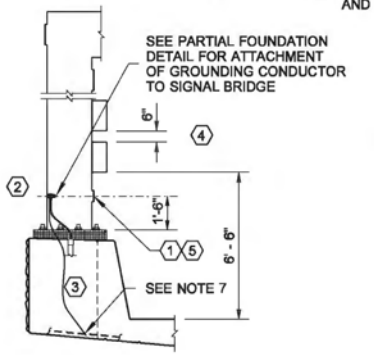

ELEVATION VIEW

WITHOUT HANDRAIL (SQUARE MONOTUBE SHOWN ~ ROUND OR MULTI-FACETED SIMILAR)

SIGNAL BRIDGE HAND HOLE PLACEMENT ON STANDARD

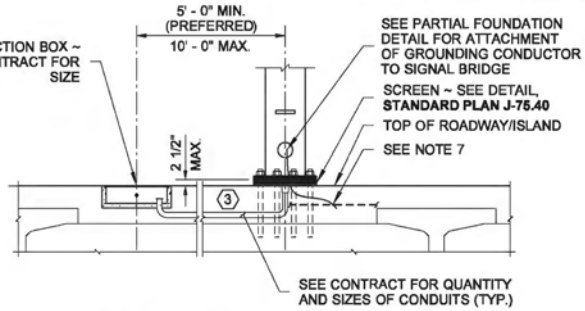

FOUNDATION DETAIL ON BRIDGE - CROSS BEAM

(NO FOUNDATION ALLOWED ON BRIDGE DECK)

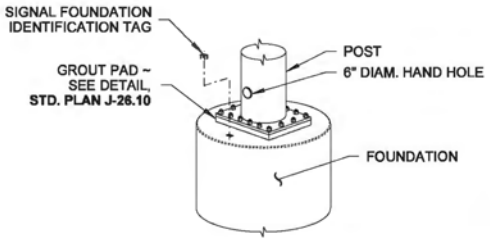

PARTIAL SIGNAL FOUNDATION DETAIL

(ROUND OR MULTI-FACETED SHOWN ~ SQUARE MONOTUBE SIMILAR)

Bailey, Ted
Jun 11 2014 9:59 AM

SIGNAL BRIDGE STANDARD ELECTRICAL DETAILS

STANDARD PLAN J-75.41-00

SHEET 2 OF 4 SHEETS

APPROVED FOR PUBLICATION

Bakotich, Pasco
Jun 11 2014 1:38 PM

STATE DESIGN ENGINEER DATE

Washington State Department of Transportation

DRAWN BY: BILL BERENS

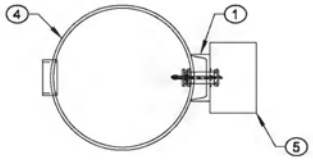

PLAN VIEW

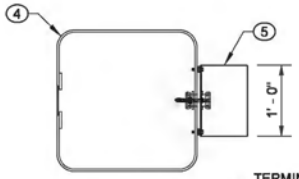

PLAN VIEW

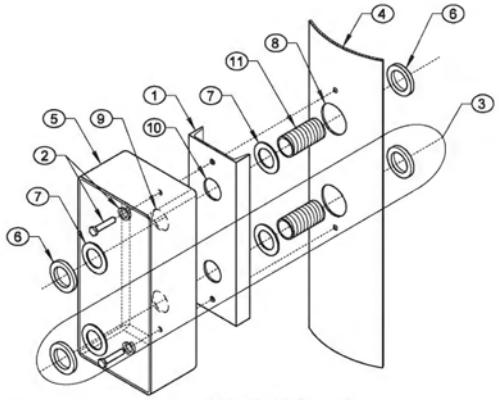

WIREWAY DETAIL
ISOMETRIC VIEW

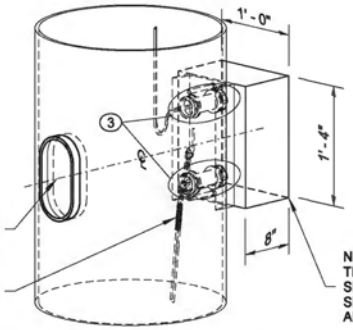

MULTI-SIDED (ROUND) TERMINAL
CABINET MOUNTING DETAIL

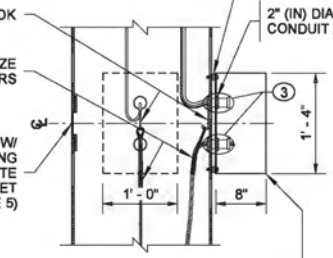

SQUARE TUBE SHOWN.
FOR MULTI-SIDED (ROUND) MONOTUBE STRUCTURE ~
ATTACH TERMINAL CABINET AS DETAILED
PER MULTI-SIDED (ROUND) TERMINAL CABINET MOUNTING DETAIL

SECTION @ TERMINAL CABINET

SQUARE MONOTUBE
CABINET MOUNTING DETAIL

KEY NOTES

1. 6 × 8.2 LB/FT CHANNEL ~ HOT-DIP GALVANIZED
2. TWO EACH:
   - 1/2-13 NC × 2 1/2" (IN) HEX HEAD BOLT **
   - LOCK WASHERS (DRILL AND TAP POLE TO ACCEPT) **
3. WIREWAY (SEE DETAIL THIS SHEET)
4. METAL POST
5. CABINET
6. END BUSHING (TYP.)
7. SEALING LOCKNUT (TYP.)
8. POLE WALL DRILLED SO BUSHING WILL PASS THROUGH (TYP.)
9. CABINET WITH BACK WALL DRILLED 1/8" (IN) OVERSIZE OF NIPPLE (TYP.)
10. CHANNEL DRILLED 1/8" (IN) OVERSIZE OF NIPPLE (TYP.)
11. 2" (IN) DIAM. × 4" (IN) NIPPLE (UNLESS OTHERWISE NOTED) (TYP.)

DRAWN BY: BILL BERENS

" t " = MATCH REINFORCEMENT RING OR WELD SIZE TO MEMBER THICKNESS

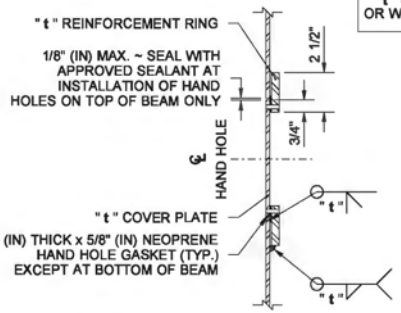

SECTION (A)

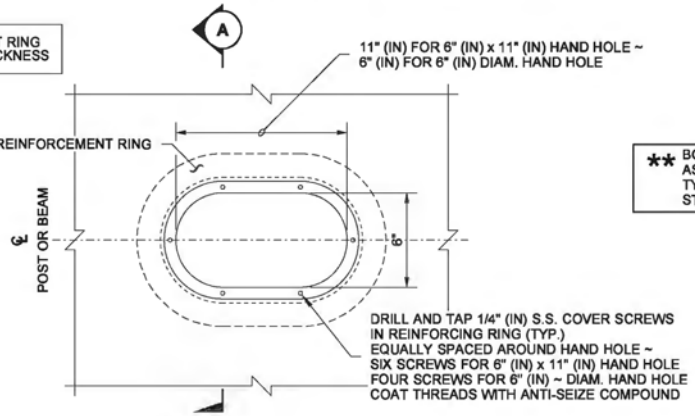

6" (IN) x 11" (IN) HAND HOLE SHOWN
6" (IN) DIAM. HAND HOLE SIMILAR EXCEPT AS SHOWN

BEAM HAND HOLE DETAIL

** BOLTS, NUTS, AND WASHERS ~ ASTM F593 OR A193 TYPE 304 OR TYPE 316 STAINLESS STEEL (S.S.)

Bailey, Ted
Jun 11 2014 9:58 AM

SIGNAL BRIDGE STANDARD ELECTRICAL DETAILS

STANDARD PLAN J-75.41-00

SHEET 3 OF 4 SHEETS

APPROVED FOR PUBLICATION

Bakotich, Pasco
Jun 11 2014 1:38 PM

STATE DESIGN ENGINEER DATE

Washington State Department of Transportation

SIGN MOUNTING NOTES

1. An acceptable alternative to a Locknut w/nylon insert shall be as follows:
   - Nylock Blue Nylon Torque-Patch
   - Nylock Precote 30
   - ND Patch 360 Ring Patch

   All products shall be applied the full length of the bolt threads with 360° coverage.
2. Hot dip galvinize all non-stainless parts.
3. For sign lighting details, See **Standard Plans J-75.40** (for Monotube) and **J-75.45** (for Round or Multi-sided) structures.

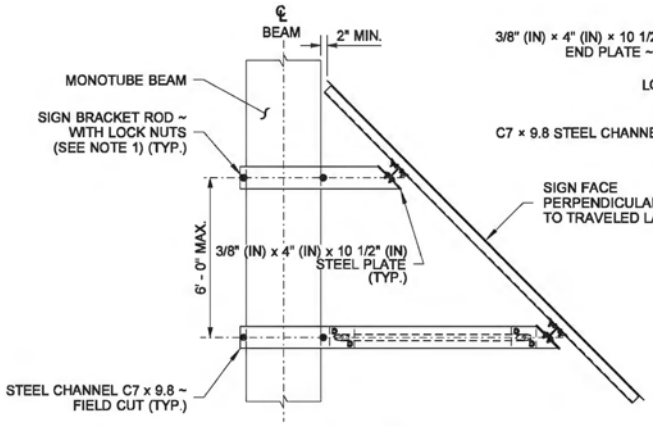

PLAN VIEW

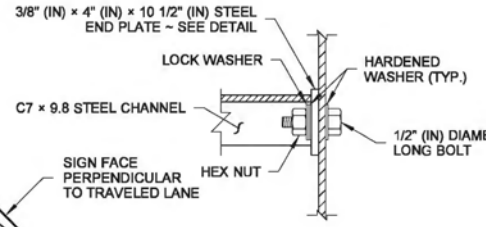

BOLT DETAIL

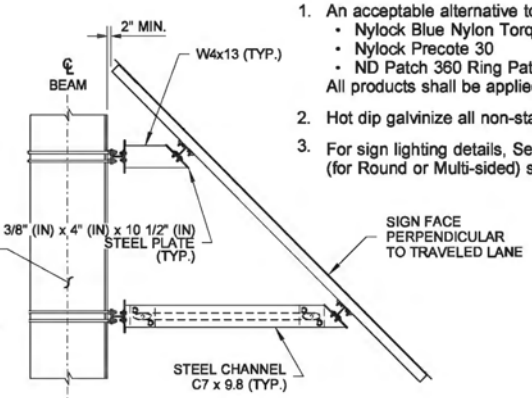

PLAN VIEW

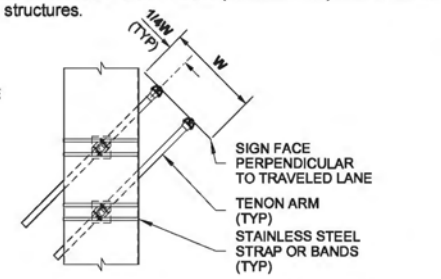

PLAN VIEW

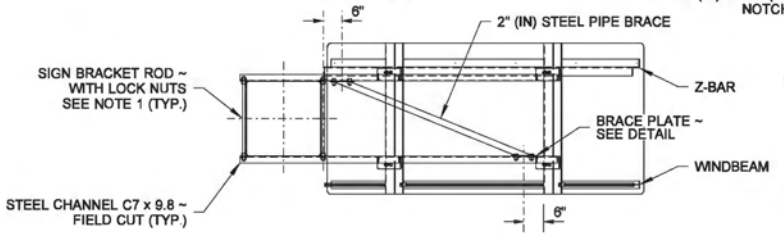

ELEVATION VIEW

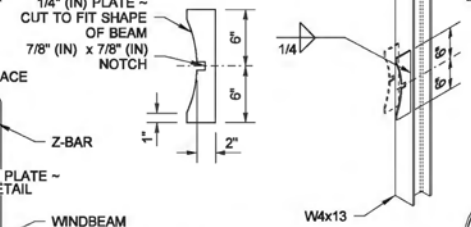

STIFFENER PLATE DETAIL

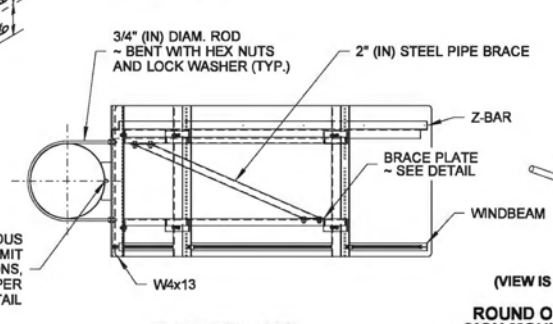

ELEVATION VIEW

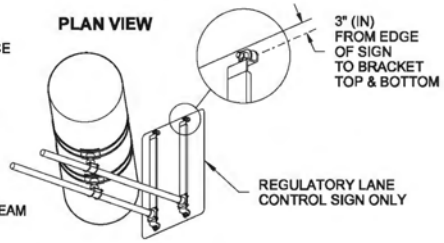

OBLIQUE VIEW

(VIEW IS FROM BELOW LOOKING UP)

ROUND OR MULTI-SIDED SIGNAL BRIDGE SIGN MOUNTING DETAILS FOR SMALL SIGN
(FOR SIGNS - 36" (IN) x 36" (IN) OR LESS)

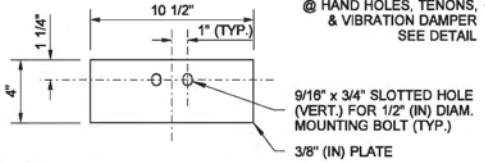

END PLATE DETAIL

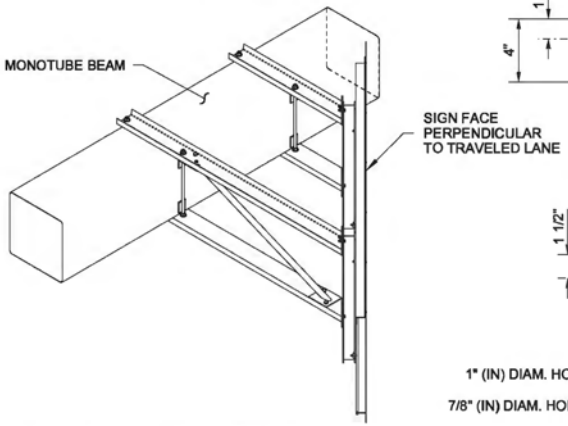

ISOMETRIC VIEW

MONOTUBE SIGNAL BRIDGE SIGN MOUNTING DETAILS (SKEWED SIGN DETAIL)

REFER TO STANDARD PLAN G-90.20 FOR ADDITIONAL DETAILING NOT SHOWN

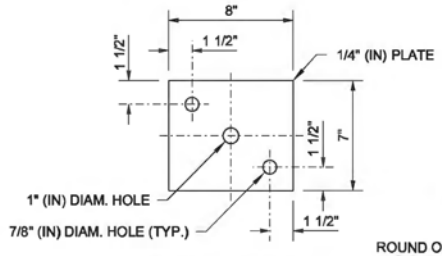

BRACE PLATE DETAIL

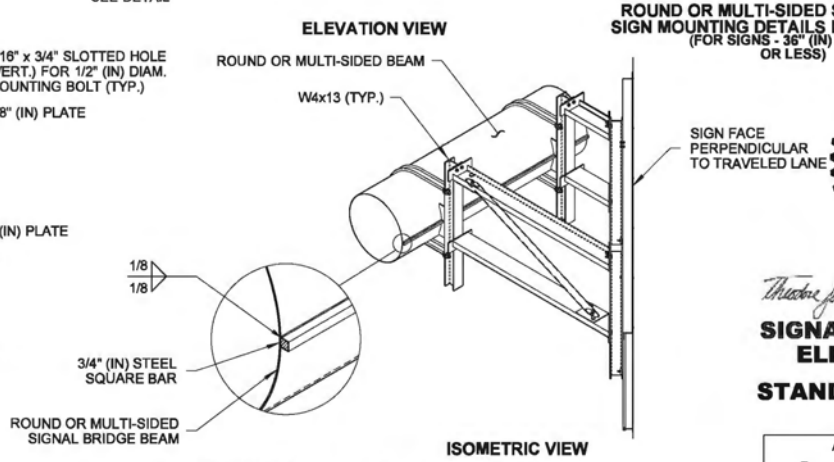

ISOMETRIC VIEW

ROUND OR MULTI-SIDED SIGNAL BRIDGE SIGN MOUNTING DETAILS FOR LARGE SIGN
(FOR SIGNS - 4' (FT) x 12' (FT) OR LESS)

DRAWN BY: BILL BERENS

THEODORE JOSEPH BAILEY
STATE OF WASHINGTON
39820
REGISTERED
PROFESSIONAL ENGINEER

Bailey, Ted
Jun 11 2014 9:58 AM

SIGNAL BRIDGE STANDARD ELECTRICAL DETAILS

STANDARD PLAN J-75.41-00

SHEET 4 OF 4 SHEETS

APPROVED FOR PUBLICATION
Bakotich, Pasco
Jun 11 2014 1:38 PM
STATE DESIGN ENGINEER DATE

Washington State Department of Transportation

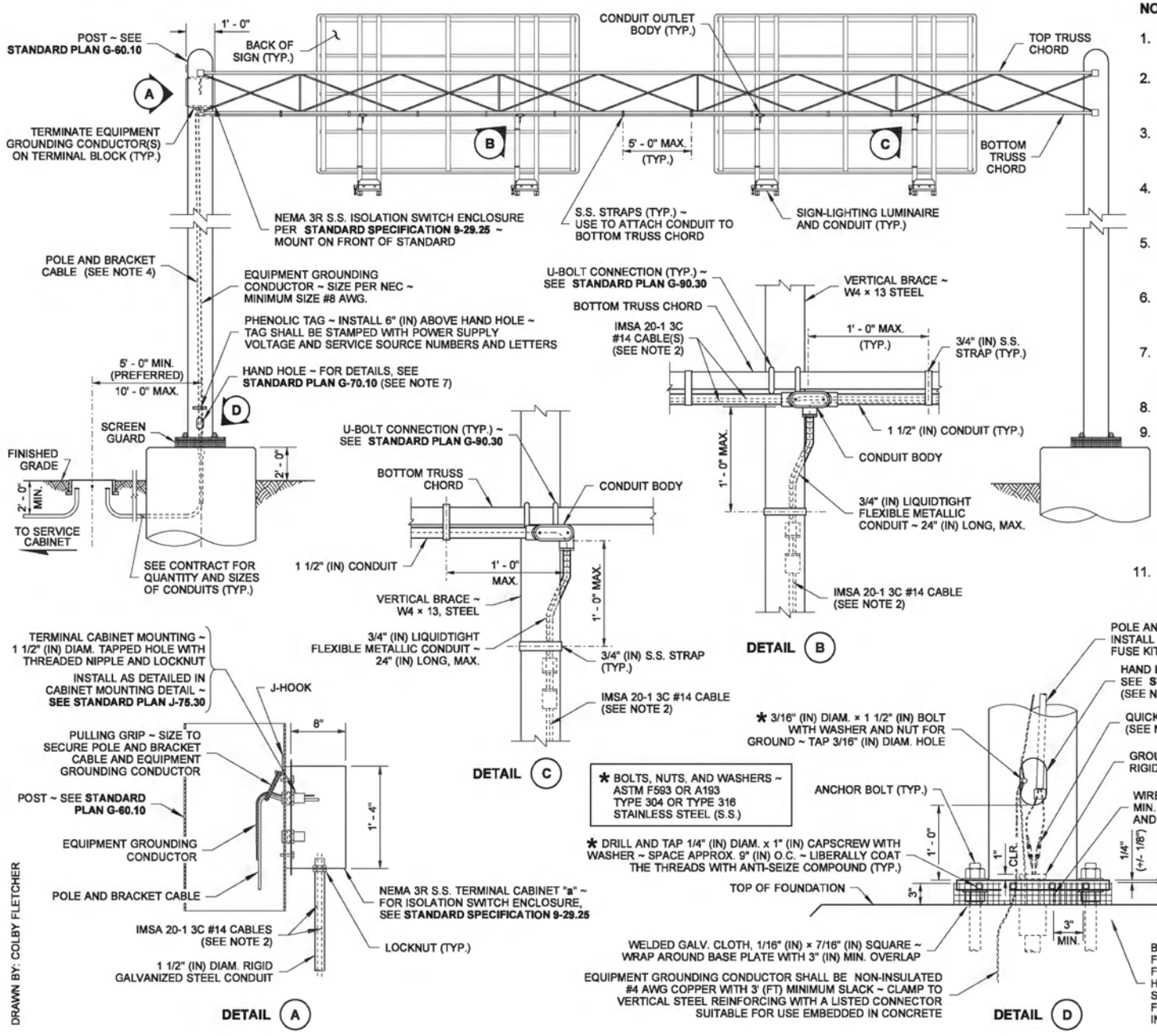

DRAWN BY: COLBY FLETCHER

NOTES

1. Typical view shown. Verify power source location, quantities, and location of signs and sign structure fixtures in Contract Plans.
2. Route separate IMSA 20-1 3C #14 cables from load side of terminal strip to each additional Sign-Lighting Luminaire (where applicable) and provide sufficient slack wire per **Standard Specification 8-20.3(8).**
3. Label all conductors with sign light and circuit number at isolation switch, handhole, and ballast enclosure. Label shall be a PVC or Polyolefin wire marking sleeve per **Standard Specification 9-29.**
4. Install quick-disconnect fuse kits between the power supply wires and pole and bracket cable per **Standard Specification 9-29.7.** Fuse size shall be 200% larger than load size.
5. The conductors in the IMSA 20-1 3C #14 cable shall be black, red, and white. The white conductor shall be permanently identified as an equipment grounding conductor per the NEC.
6. All GRS conduits embedded in foundation shall be terminated with grounding end bushing and bonded to the ground terminal in the base of pole. All PVC conduits embedded in foundations shall be terminated with end bell bushing.
7. Hand holes shall be installed at the time of fabrication. Only additional conduits for lighting accommodations to previously non-illuminated structures may be installed in field as long as the proper repairs are made to structure.
8. For details not shown, see **Standard Plan G-90.40**.
9. All holes shall be drilled and tapped.
10. Use the Retrofit details only when the following conditions apply:
    A. Existing W4 × 13 Steel Beam sign brackets are to be reused for a new Sign-Lighting Luminaire.
    B. The span between the existing Luminaire Brackets is too wide to attach the new Sign-Lighting Luminaire and Luminaire Mounting Plate.
11. If the sign structure includes a maintenance walkway, the Luminaire Mounting Plate shall be bolted to the walkway grating.

THEODORE JOSEPH BAILEY
STATE OF WASHINGTON
39820
REGISTERED
PROFESSIONAL ENGINEER

Bailey, Ted
Jun 11 2014 10:12 AM

OVERHEAD SIGN ELECTRICAL DETAILS (TRUSS STRUCTURE) STANDARD PLAN J-75.45-01

SHEET 1 OF 2 SHEETS

APPROVED FOR PUBLICATION
Bakotich, Pasco
Jun 11 2014 1:39 PM
STATE DESIGN ENGINEER
Washington State Department of Transportation

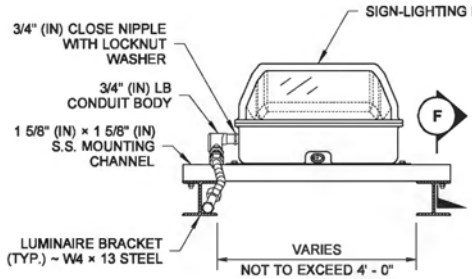

SECTION E

SIGN-LIGHTING FIXTURE WITH RETROFIT

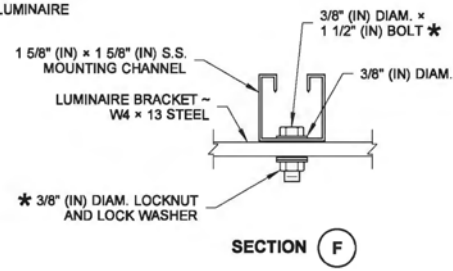

SECTION F

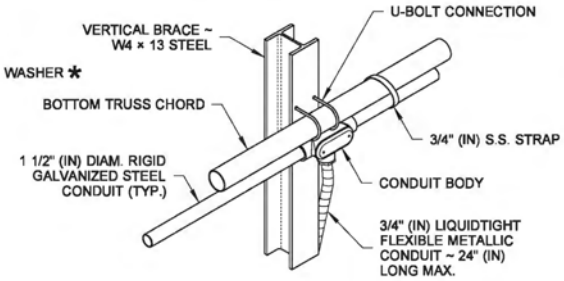

DETAIL J

* BOLTS, NUTS, AND WASHERS ~ ASTM F593 OR A193 TYPE 304 OR TYPE 316 STAINLESS STEEL (S.S.)

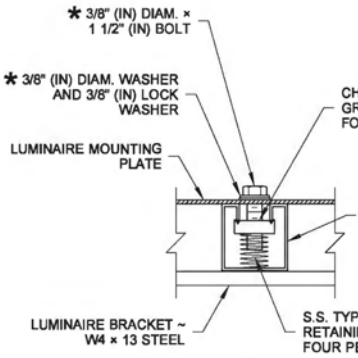

DETAIL G

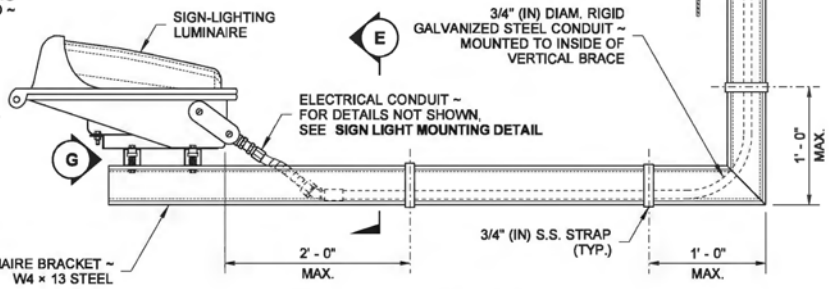

RETROFIT MOUNTING DETAIL

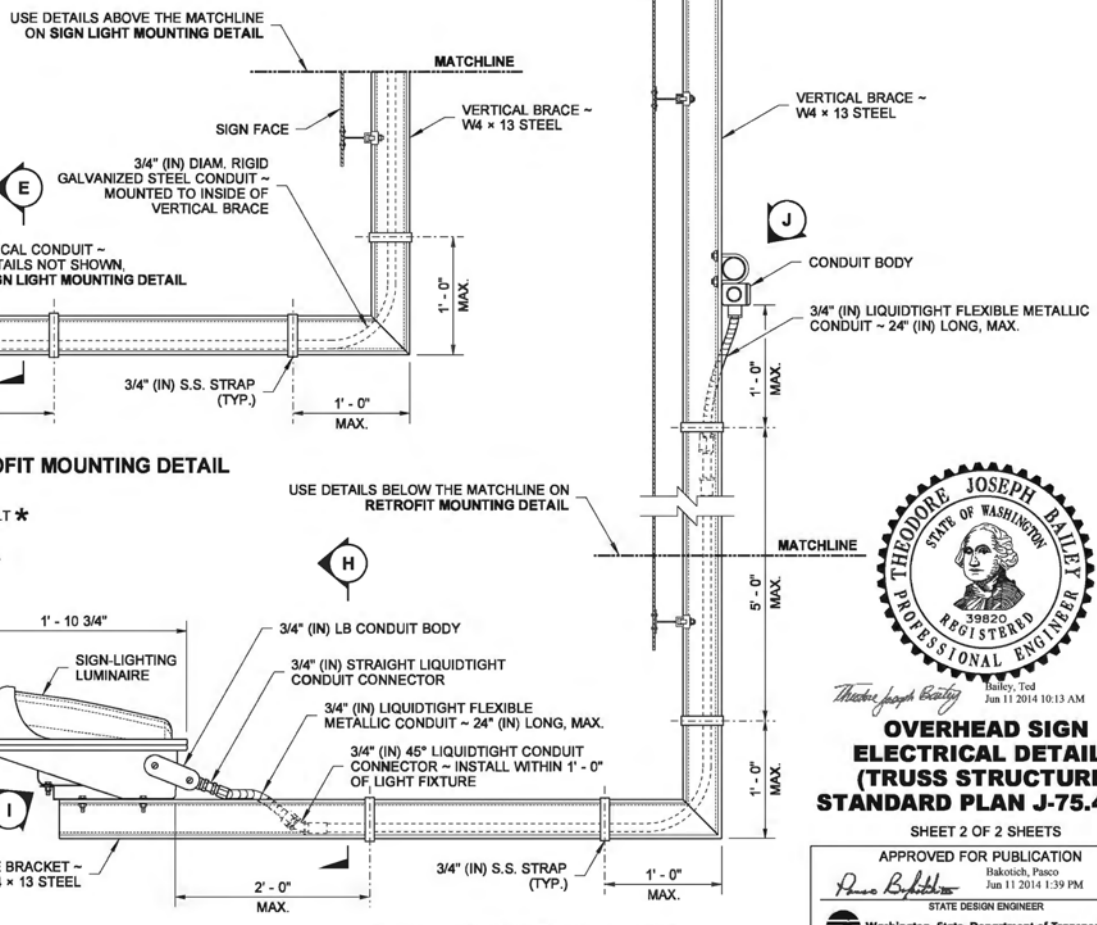

SIGN LIGHT MOUNTING DETAIL

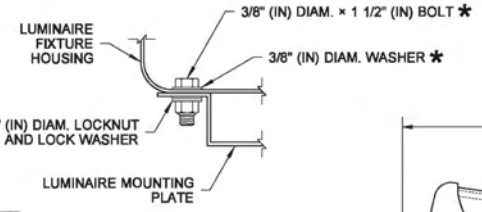

DETAIL I

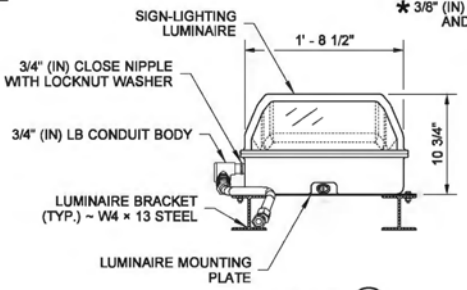

SECTION H

DRAWN BY: COLBY FLETCHER

THEODORE JOSEPH BAILEY
STATE OF WASHINGTON
39820
REGISTERED
PROFESSIONAL ENGINEER

Bailey, Ted
Jun 11 2014 10:13 AM

OVERHEAD SIGN ELECTRICAL DETAILS (TRUSS STRUCTURE) STANDARD PLAN J-75.45-01

SHEET 2 OF 2 SHEETS

APPROVED FOR PUBLICATION

Bakotich, Pasco
Jun 11 2014 1:39 PM

STATE DESIGN ENGINEER

Washington State Department of Transportation

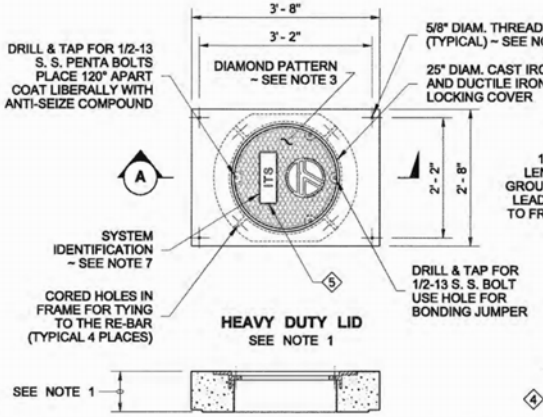

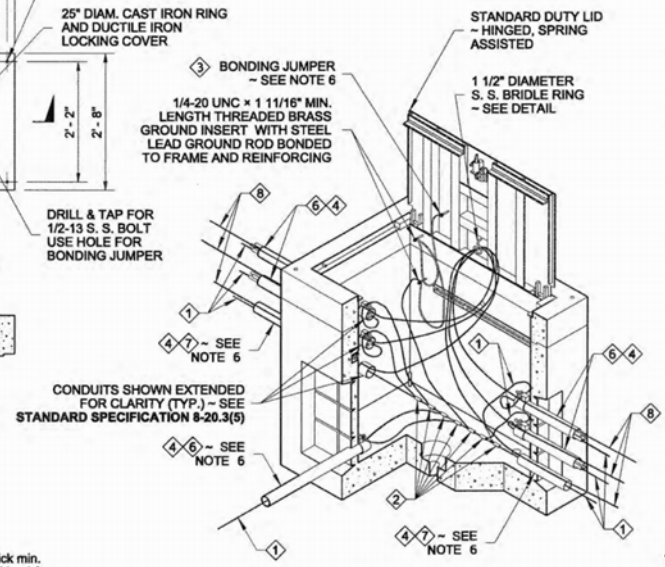

DRAWN BY: LISA CYFORD

1. Equipment Grounding Conductor
2. Copper Solderless Crimp Connector
3. Equipment Bonding Jumper ~ See Note 5
4. See Contract for conduit size and number
5. Provide a 1 1/2" wide × 3 1/2" high × 3/16" thick min. flat area for lifting purposes (for Ductile Iron Lid only)
6. GRS Shown ~ See Contract for conduit type
7. PVC Shown ~ See Contract for conduit type
8. Location Wire

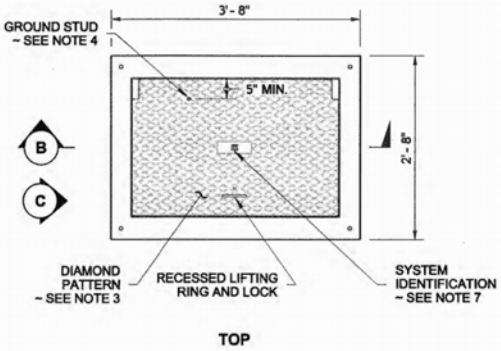

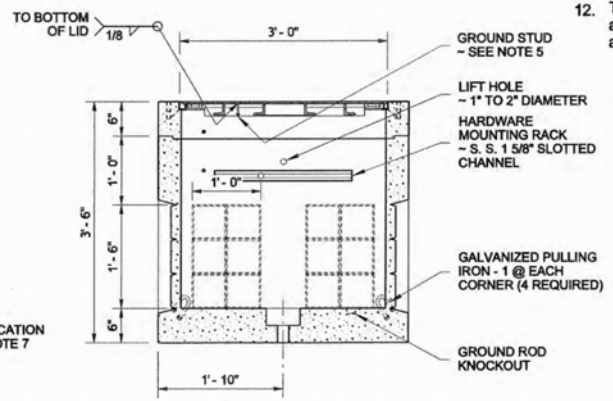

NOTES

1. The Heavy Duty Lid shall be used when a Pull Box is placed in the paved shoulder or the traveled way. Use a 9" thick lid for new Pull Box installations. Use a 6" thick Heavy Duty Lid when converting a Standard Duty Pull Box into a Heavy Duty Pull Box in the paved shoulder or the traveled way and no overlay is called for in the Contract. Otherwise, see Contract Plans for overlay depth and fabricate lid thickness to match overlay depth.
2. Use Standard Duty Pull Box and Lid when placed in unpaved areas. Use Standard Duty Pull Box in sidewalks, walkways, and shared-use paths.
3. Minimum lid thickness shown. The diamond pattern shall be a minimum of 3/32" thick.
4. Standard Duty Pull Boxes installed in sidewalks, walkways, and shared-use paths shall have a slip-resistant coating on lid and shall be installed with the surface flush with and matched to the grade of the sidewalk, walkway, and shared-use paths. The non-slip lid shall be identified with permanent marking on the underside indicating the type of surface treatment (see Contract Documents for details) and the year of manufacture. The permanent marking shall be 1/8" inch line thickness formed with a stainless steel weld bead and shall be placed prior to hot-dip galvanizing.
5. A 1/4-20 UNC × 3/4" S. S. ground stud with (2) S. S. nuts and (2) S. S. flat washers shall be attached to the Standard Duty Lid and coated with anti-seize compound. Provide a 5/8" diameter cored hole in the ductile iron lid gusset (Heavy Duty Lid) with 1/2-13 UNC × 1 1/4" S. S. bolt, (3) S. S. flat washers, and (2) S. S. nuts for the Bonding Jumper.
6. Connect a Bonding Jumper to the steel conduit bushing for GRS conduit and connect the steel conduit bushing jumper to the equipment ground at the threaded brass ground insert. Connect the equipment grounding conductors in the PVC and/or GRS conduits to the brass ground insert. The Bonding Jumper shall be #8 min. x 4' (ft.) of tinned braided copper between the lid and the frame of the Heavy Duty tops and from the Heavy Duty top to the threaded brass ground insert. The Bonding Jumper shall be #8 min. x 4' (ft.) of tinned braided copper between the lid on a Standard Duty Pull Box and the threaded brass ground insert. See Contract Plan Sheets and **Standard Plan J-60.05** for Bonding Jumper requirements.
7. The system identification letters shall be 1/8" line thickness formed by engraving, casting, stamping, or with a S. S. weld bead. See COVER MARKING DETAIL. See **Standard Specification 9-29.2(4).** Ductile iron lid lettering shall be recessed.
8. Cement concrete shall be Class 4000.
9. Plastic plugs shall be put into the lid inserts after fabrication and the lid installation.
10. Capacity - conduit diameter = 40" (in.).
11. Excavate material, place 6" crushed surfacing pad per **Standard Specification Section 8-20.3(6).** Field bend #3 reinforcing bar to allow conduit into the Pull Box. Field bend reinforcing bar back into place, wire tie in (2) places, and cast in commercial concrete (commercial concrete only allowed for box bottom/wall completion).
12. This drawing depicts a typical Pull Box assembly. Reinforcing not shown. Each manufacturer's Pull Box assembly will vary. Refer to the approved manufacturer's shop drawings for all dimensions and the actual arrangement.

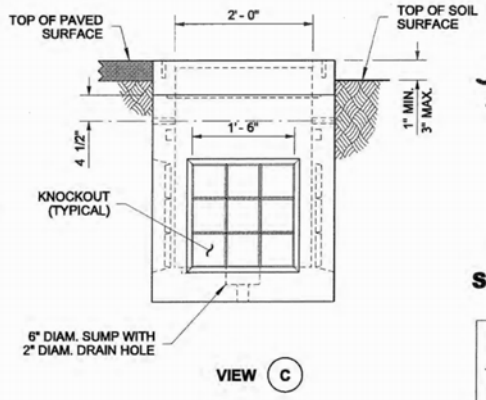

PULL BOX

STANDARD PLAN J-90.10-01

SHEET 1 OF 2 SHEETS

APPROVED FOR PUBLICATION

STATE DESIGN ENGINEER — DATE

Washington State Department of Transportation

DRAWN BY: LISA CYFORD

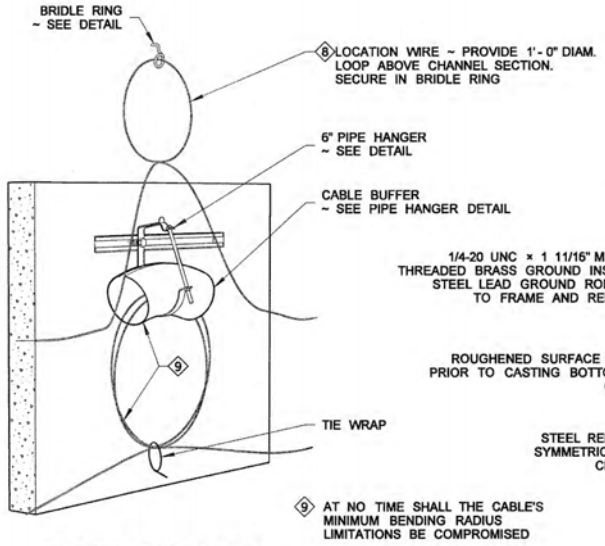

INTERNAL OBLIQUE VIEW

COIL THE CABLE BY USING A "FIGURE 8" FOLDED IN THE MIDDLE TO FORM A LOOP

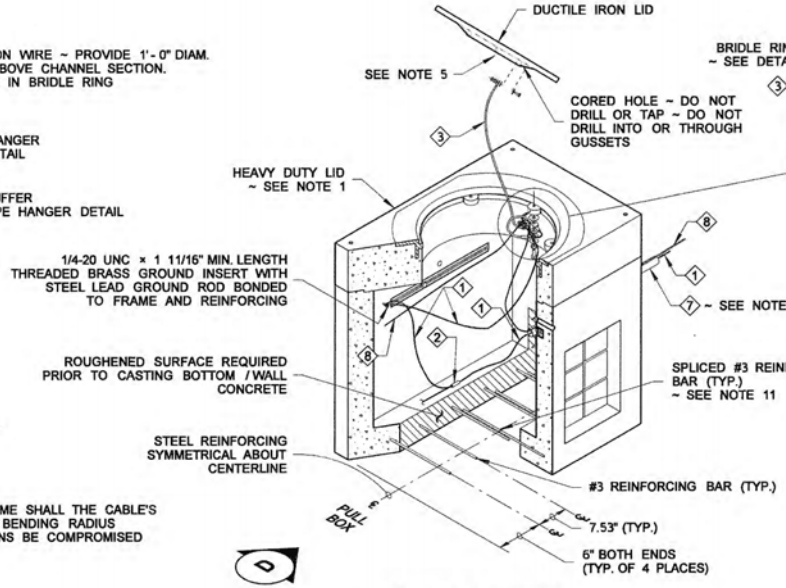

ISOMETRIC CUTAWAY

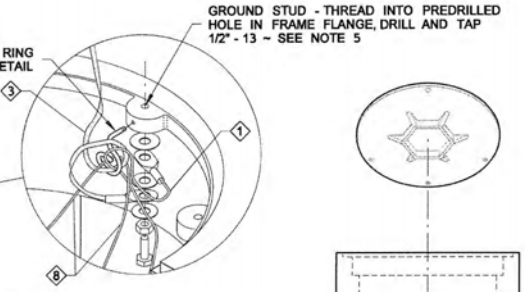

SPLIT PULL BOX ASSEMBLY

(SHOWN WITH HEAVY DUTY LID)

SEE **PULL BOX**, SHEET 1, FOR DIMENSIONS NOT SHOWN

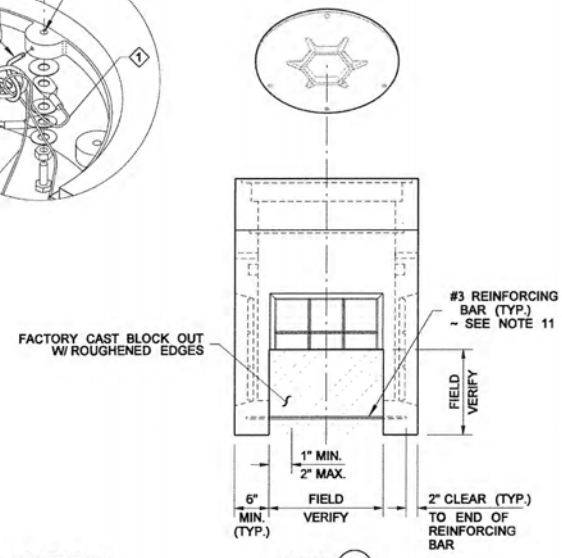

VIEW D

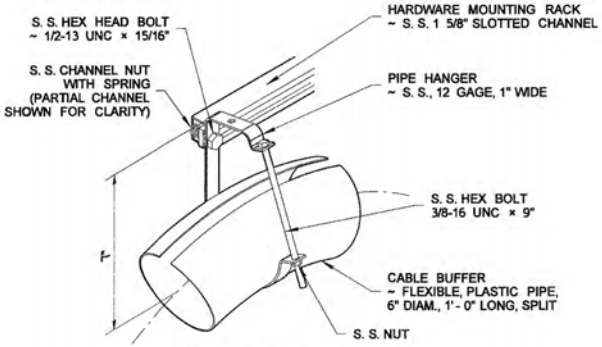

PIPE HANGER DETAIL

FABRICATE IF NOT AVAILABLE COMMERCIALLY

COVER MARKING DETAIL

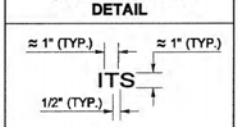

SEE NOTE 7

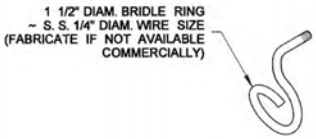

BRIDLE RING DETAIL

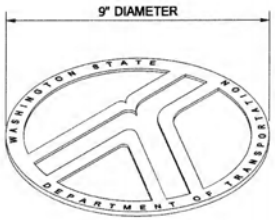

LOGO DETAIL

PULL BOX

STANDARD PLAN J-90.10-01

SHEET 2 OF 2 SHEETS

APPROVED FOR PUBLICATION

STATE DESIGN ENGINEER — DATE 4/23/14

Washington State Department of Transportation

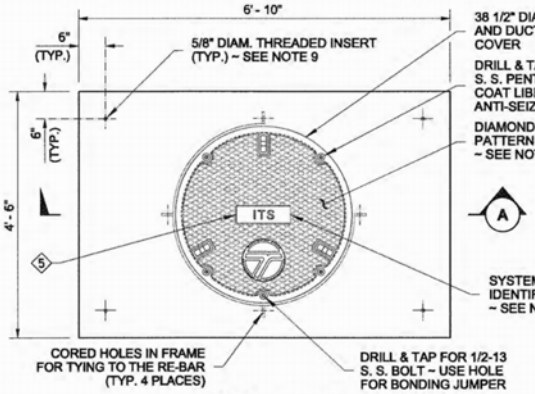

HEAVY DUTY LID
SEE NOTE 1

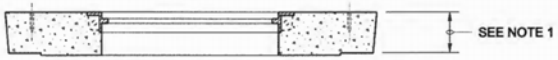

SECTION (A)
(LID NOT SHOWN)

DRAWN BY: LISA CYFORD

1. Equipment Grounding Conductor
2. Copper Solderless Crimp Connector
3. Equipment Bonding Jumper ~ See Note 6
4. See Contract for Conduct Size and Number
5. Provide a 5" Wide × 3" High × 3/16" Thick Min. Flat Area for Lifting Purposes (for Ductile Iron Lid Only)
6. GRS Shown ~ See Contract for Conduit Type
7. PVC Shown ~ See Contract for Conduit Type
8. Location Wire

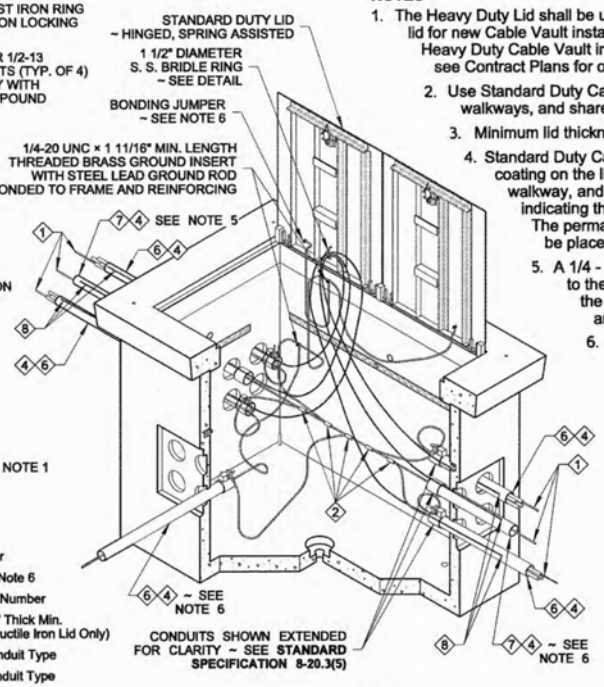

ISOMETRIC CUTAWAY

NOTES

1. The Heavy Duty Lid shall be used when a Cable Vault is placed in the paved shoulder or the traveled way. Use a 9" thick lid for new Cable Vault installations. Use a 6" thick Heavy Duty Lid when converting a Standard Duty Cable Vault into a Heavy Duty Cable Vault in the paved shoulder or the traveled way and no overlay is called for in the Contract. Otherwise, see Contract Plans for overlay depth and fabricate lid thickness to match overlay depth.
2. Use Standard Duty Cable Vault and Lid when placed in unpaved areas. Use Standard Duty Pull Box in sidewalks, walkways, and shared-use paths.
3. Minimum lid thickness shown. The diamond pattern shall be a minimum of 3/32" thick.
4. Standard Duty Cable Vaults installed in sidewalks, walkways, and shared-use paths shall have a slip-resistant coating on the lid and shall be installed with the surface flush with and matched to the grade of the sidewalk, walkway, and shared-use paths. The non-slip lid shall be identified with permanent marking on the underside indicating the type of surface treatment (see Contract Documents for details) and the year of manufacture. The permanent marking shall be 1/8" inch line thickness formed with a stainless steel weld bead and shall be placed prior to hot-dip galvanizing.
5. A 1/4 - 20 UNC × 3/4" S. S. ground stud with (2) S. S. nuts and (2) S. S. flat washers shall be attached to the Standard Duty Lid and coated with anti-seize compound. Provide a 5/8" diameter cored hole in the ductile iron lid gusset (Heavy Duty Lid) with 1/2 - 13 UNC × 1 1/4" S. S. bolt, (3) S. S. flat washers, and (2) S. S. nuts for the Bonding Jumper.
6. Connect a Bonding Jumper to the steel conduit bushing for GRS conduit and connect the steel conduit Bushing Jumper to the equipment ground at the threaded brass ground insert. Connect the equipment grounding conductors in the PVC and/or GRS conduits to the brass ground insert. The Bonding Jumper shall be #8 min. x 4' (ft.) of tinned braided copper between the lid and the frame of the Heavy Duty tops and from the Heavy Duty top to the threaded brass ground insert. The Bonding Jumper shall be #8 min. x 4' (ft.) of tinned braided copper between the lid on a Standard Duty vault and the threaded brass ground insert. See Contract Plan Sheets and **Standard Plan J-60.05** for Bonding Jumper requirements.
7. The system identification letters shall be 1/8" line thickness formed by engraving, casting, stamping, or with a S. S. weld bead. See COVER MARKING DETAIL, **Standard Specification 9-29.2(4).** Ductile iron lid lettering shall be recessed.
8. Cement concrete shall be Class 4000.
9. Plastic plugs shall be put into the lid inserts after fabrication and the lid installation.
10. Capacity - conduit diameter = 60" (in.).
11. Excavate material, place 6" crushed surfacing pad per **Standard Specification 8-20.3(6).** Field bend #3 reinforcing bar to allow conduit into the Cable Vault. Field bend reinforcing bar back into place, wire tie in (2) places and cast in commercial concrete (commercial concrete only allowed for bottom/wall completion).
12. This drawing depicts a typical Cable Vault assembly. Reinforcing not shown. Each manufacturer's Cable Vault assembly will vary. Refer to the approved manufacturer's shop drawings for all dimensions and the actual arrangement.

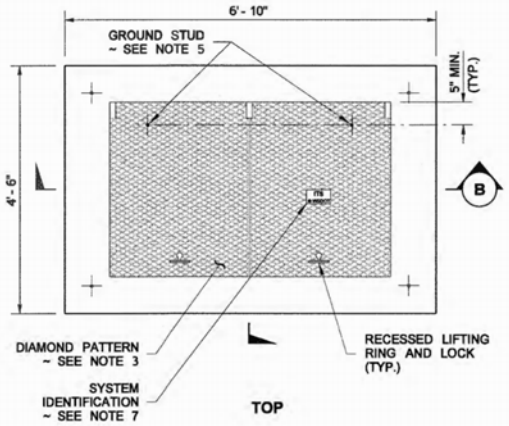

TOP

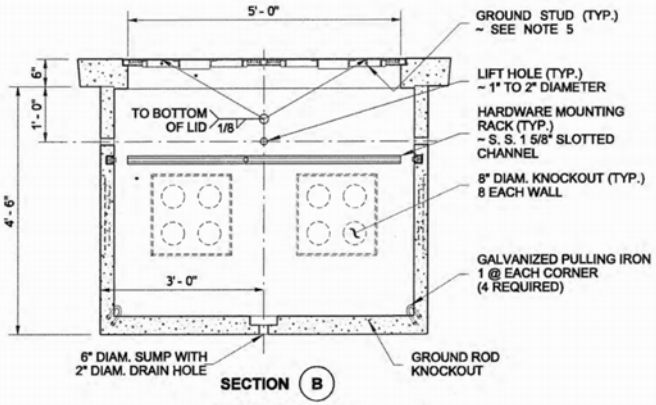

SECTION (B)

CABLE VAULT
(SHOWN WITH STANDARD DUTY LID)

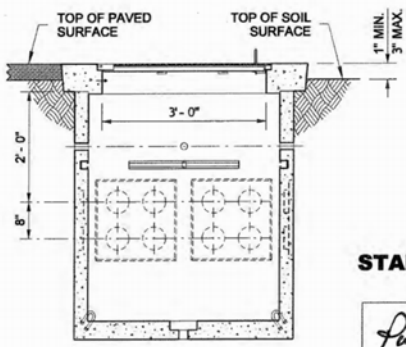

VIEW (C)

CABLE VAULT

STANDARD PLAN J-90.20-01

SHEET 1 OF 2 SHEETS

APPROVED FOR PUBLICATION

STATE DESIGN ENGINEER — DATE

Washington State Department of Transportation

DRAWN BY: LISA CYFORD

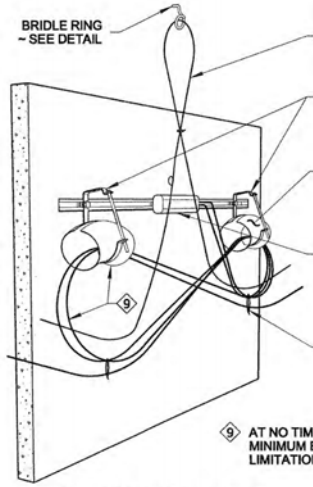

INTERNAL OBLIQUE VIEW

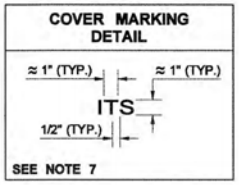

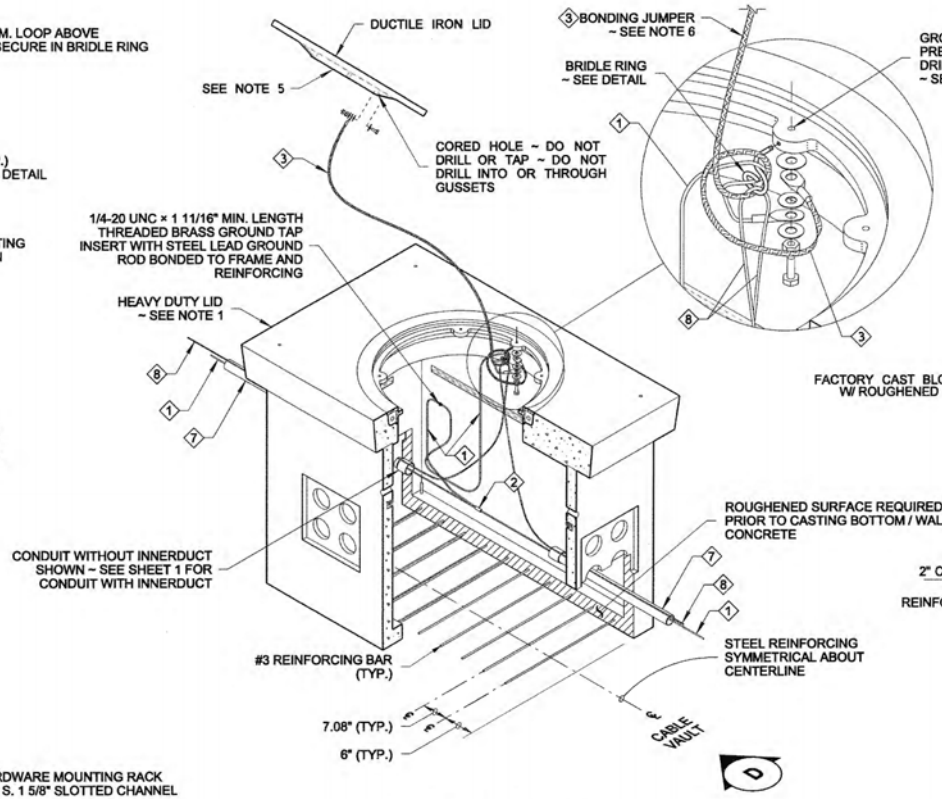

ISOMETRIC CUTAWAY

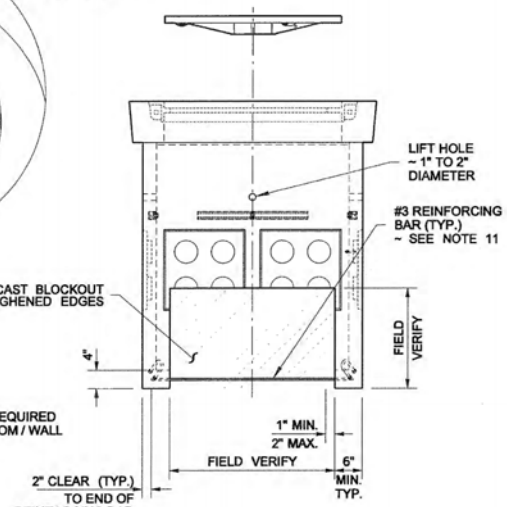

VIEW D

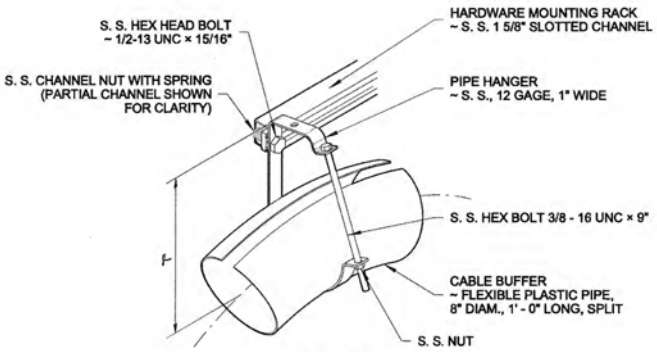

PIPE HANGER DETAIL
FABRICATE IF NOT AVAILABLE COMMERCIALLY

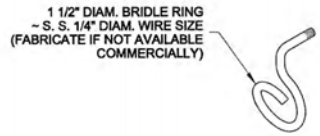

BRIDLE RING DETAIL

SPLIT CABLE VAULT
(SHOWN WITH HEAVY DUTY LID)
SEE **CABLE VAULT**, SHEET 1, FOR DIMENSIONS NOT SHOWN

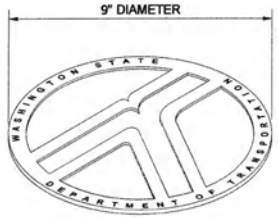

LOGO DETAIL

CABLE VAULT

STANDARD PLAN J-90.20-01

SHEET 2 OF 2 SHEETS

APPROVED FOR PUBLICATION

STATE DESIGN ENGINEER — DATE

Washington State Department of Transportation

DRAWN BY: FERN LIDDELL

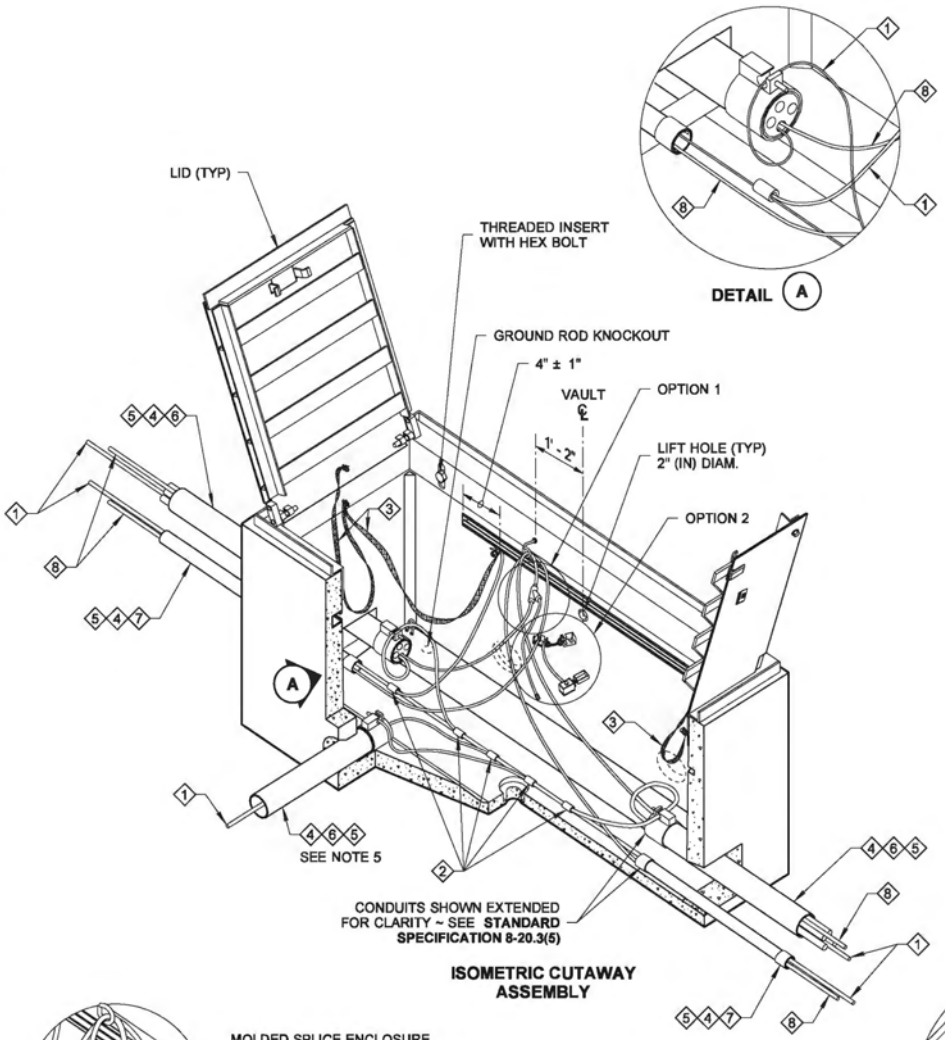

ISOMETRIC CUTAWAY ASSEMBLY

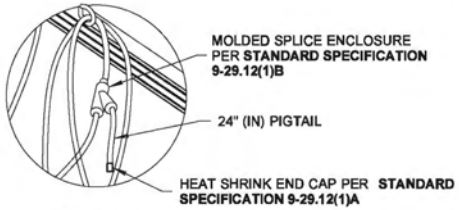

OPTION 1

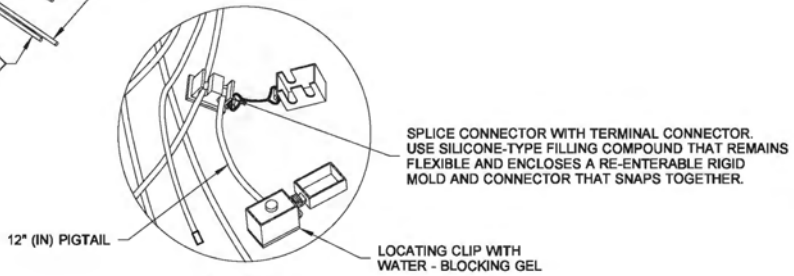

OPTION 2

NOTES

1. The Small Cable Vault shall be used in unpaved areas, and shall not be installed in the paved shoulders or traveled way. Use Small Cable Vault in sidewalks, walkways, and shared-use paths. Heavy Duty Cable Vault shall be used when installed in the paved shoulder or the traveled way.
2. The diamond pattern shall be a minimum of 3/32" (in) thick.
3. Small Cable Vaults installed in sidewalks, walkways, and shared-use paths shall have a slip-resistant coating on the lid and shall be installed with the surface flush with and matched to the grade of the sidewalk, walkway, and shared-use paths. The non-slip lid shall be identified with permanent marking on the underside indicating the type of surface treatment (see Contract Documents for details) and the year of manufacture. The permanent marking shall be 1/8" (in) line thickness formed with a stainless steel weld bead and shall be placed prior to hot-dip galvanizing.
4. A 1/4 - 20 UNC × 3/4" (IN) ground stud with two nuts and two flat washers shall be welded to each lid and coated with anti-seize compound. A 1/4 - 20 UNC × 3/4" (IN) ground stud with two nuts and three flat washers shall be welded to the frame and coated with anti-seize compound.
5. Connect a bonding jumper to the steel conduit bushing for RMC conduit and connect the steel conduit bushing jumper to the equipment ground at the hex coupling nut welded to the stainless steel channel. Connect the equipment grounding connectors in the PVC and/or RMC conduits to the hex coupling nut. The bonding jumper shall be #8 min. x 1' (ft) of tinned braided copper between the lid and the frame and shall be #8 min. x 4' (ft) of tinned braided copper from the frame to the hex coupling nut. See Contract Plans and **Standard Plan J-60.05** for bonding jumper requirements.
6. The system identification letters shall be 1/8" (in) line thickness formed by engraving, stamping, or with a stainless steel weld bead. See COVER MARKING DETAIL, **Standard Specification 9-29.2(4)**.
7. Cement concrete shall be Class 4000.
8. Capacity - conduit diameter = 40" (in).
9. Vault shall be installed on 6" (in) crushed surfacing pad in accordance with **Standard Specification 8-20.3(6).**
10. Typical Small Cable Vault features and arrangement shown. Reinforcing not shown. Dimensions and arrangements will vary slightly by manufacturer ~ See Approved shop drawings.
12. Small Cable Vaults for WSDOT Projects shall only be installed with the lid frame bearing on the concrete portion of cable vault.
13. Location wire splice shall be molded splice enclosure or splice connector with terminal connection.

* BOLTS, NUTS AND WASHERS ~ **ASTM F593 OR A193, TYPE 304 OR TYPE 316** STAINLESS STEEL (S.S.)

1. Equipment Grounding Conductor
2. Copper Solderless Crimp Connector
3. Equipment Bonding Jumper ~ See Note 5
4. See Contract for Conduit Size and Number
5. Identified to contain future Fiber Optic Cable
6. RMC Shown ~ See Contract for Conduit Type
7. PVC Shown ~ See Contract for Conduit Type
8. Location Wire

THEODORE JOSEPH BAILEY
STATE OF WASHINGTON
39820
REGISTERED
PROFESSIONAL ENGINEER

Bailey, Ted
Jun 26 2014 4:31 PM

SMALL CABLE VAULT

STANDARD PLAN J-90.21-00

SHEET 1 OF 2 SHEETS

APPROVED FOR PUBLICATION
Bakotich, Pasco
Jun 30 2014 3:14 PM

STATE DESIGN ENGINEER

Washington State Department of Transportation

DRAWN BY: FERN LIDDELL

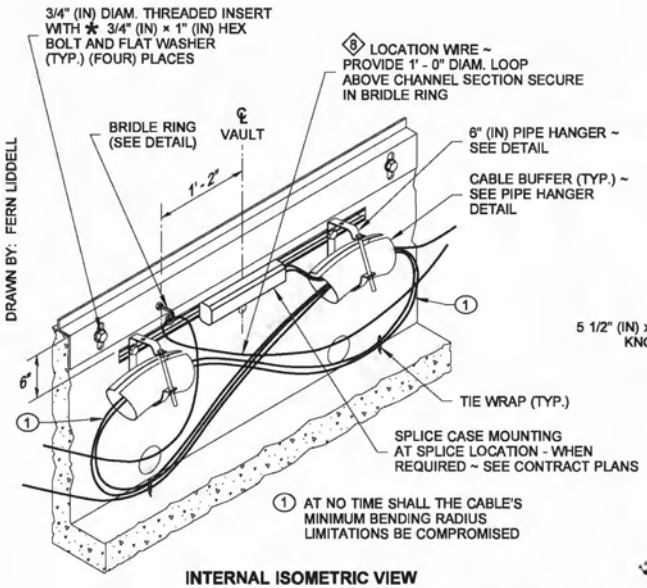

INTERNAL ISOMETRIC VIEW

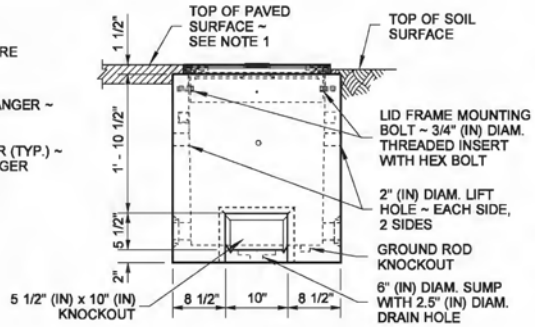

END VIEW

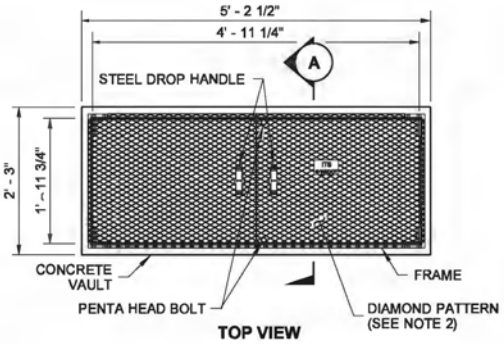

TOP VIEW

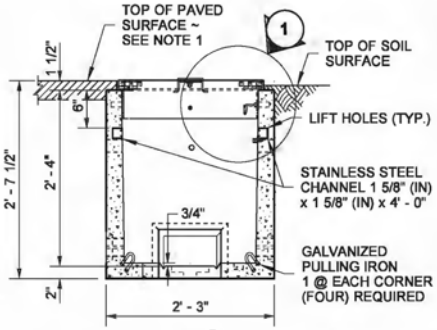

SECTION (A)

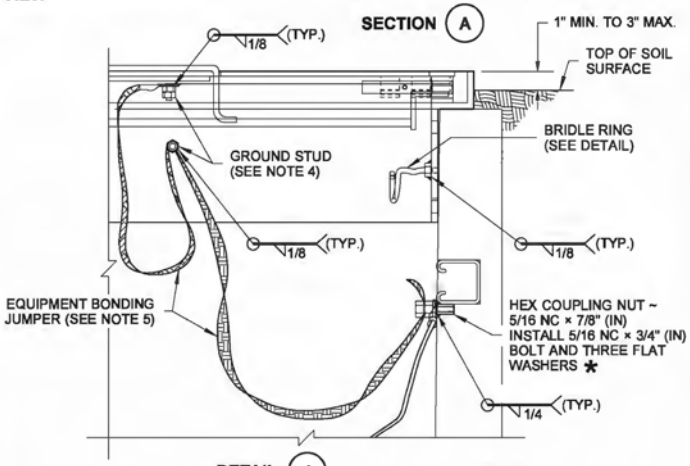

DETAIL (1)

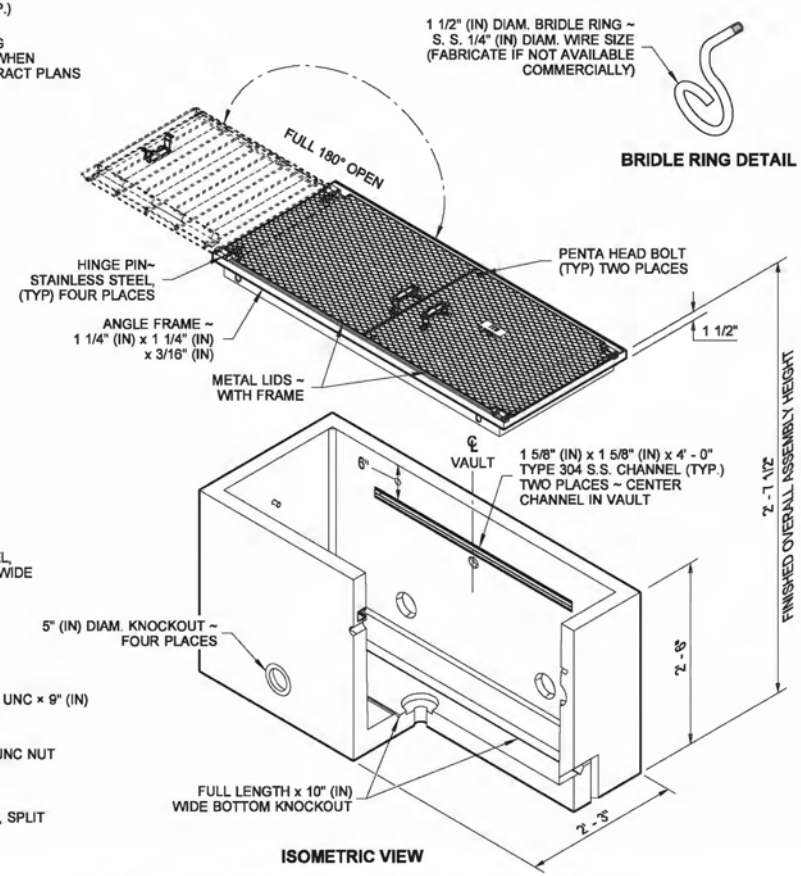

BRIDLE RING DETAIL

ISOMETRIC VIEW

SEE ISOMETRIC CUTAWAY ASSEMBLY ~ SHEET 1, FOR DIMENSIONS NOT SHOWN

COVER MARKING DETAIL

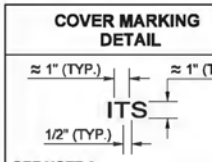

SEE NOTE 6

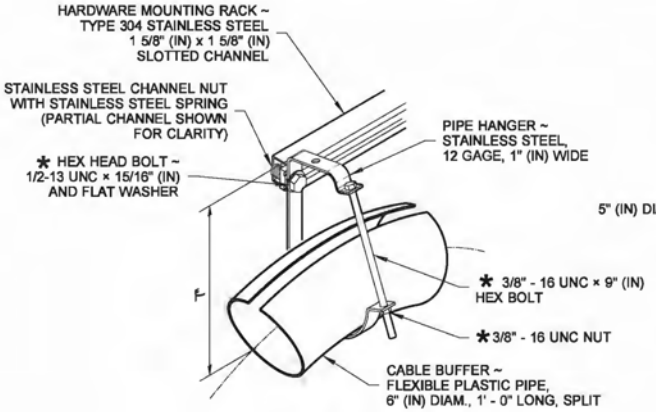

PIPE HANGER DETAIL

FABRICATE IF NOT AVAILABLE COMMERCIALLY

Theodore Joseph Bailey Bailey, Ted Jun 26 2014 4:31 PM

SMALL CABLE VAULT

STANDARD PLAN J-90.21-00

SHEET 2 OF 2 SHEETS

APPROVED FOR PUBLICATION
Bakotich, Pasco
Jun 30 2014 3:14 PM

STATE DESIGN ENGINEER

Washington State Department of Transportation