Electrical Design Training Class

Ampacity
WSDOT
Fall / Winter 2004

presented by: Keith Calais

What is it?

- Ampacity is the current, in Amperes, that a conductor can carry continuously under the conditions of use without exceeding its temperature rating.

Why do we need to worry about it?

- If **the conductors get too hot they will burn up and short out.**

- **As the conductor heats up the current carrying capacity goes down.**

- **If you overload the capacity of the conductors they will heat up and short out.**

When do we calculate Ampacity?

- Ampacity should be considered every time you **add conductors to a conduit**.

- Every time you **modify an existing circuit**.

- On **all new designs** the ampacity should be checked.

How do we calculate it?

Ampacity is calculated by using this simple formula:

$$*I = \frac{TC - (TA + Delta\ TD)}{RDC(1+YC)RCA}$$

*All calculations must be checked and approved by a licensed electrical engineer.

Where:

TC=Conductor temperature in degrees Celsius

TA=Ambient temperature in degrees Celsius

DeltaTD=Dielectric loss temperature rise

RDC=dc resistance of conductor at temperature TC

YC= Component ac resistance resulting from skin effect of proximity effect

RCA=Effective thermal resistance between conductor and surrounding ambient

Or use this chart (2002 NEC 310.16):

Allowable Ampacities of Insulated Conductors rated 0 through 2000 volts
(Not more than three current-carrying conductors in raceway, cable or earth(direct buried) based on ambient temperature of 86f)

Wire Size	Allowable Ampacities	Wire Size	Allowable Ampacities
14	20	1/0	150
12	25	2/0	175
10	35	3/0	200
8	50	4/0	230
6	65	250	255
4	85	300	285
3	100	350	310
2	115	400	335
1	130	500	380

Adjustment factors for more than three <u>current-carrying</u> conductors in a raceway or cable. ((2002 NEC 310.15(b)(2)(a))

Number of current carrying conductors	Percent of values in NEC Tables 310.16 thru 310.19
4-6	80
7-9	70
10-20	50
21-30	45
31-40	40
41 and above	35

Potential Ampacity problems:

- The most common problem is at the conduit leaving the service.

- Large loads (usually ITS Transformers) sharing the same conduit as illumination circuits.

Check Ampacity of Wire

- **Given:** wire run #1 = one 3” conduit, containing Illumination circuit A with **2-#2**, Illumination circuit B with **2-#4** ITS Transformer-ES 325 & CC325 circuit C with **3-#6**, ITS-VMS 325 circuit D with **3-#8** & Traffic Signal #1 circuit E with **3-#8** conductors for a total of 10 current carrying conductors. Note: These conductors are properly sized for allowable voltage drop. (they are the numbers we calculated in the Ampacity chapter.)

WIRES SIZED FOR VOLTAGE DROP

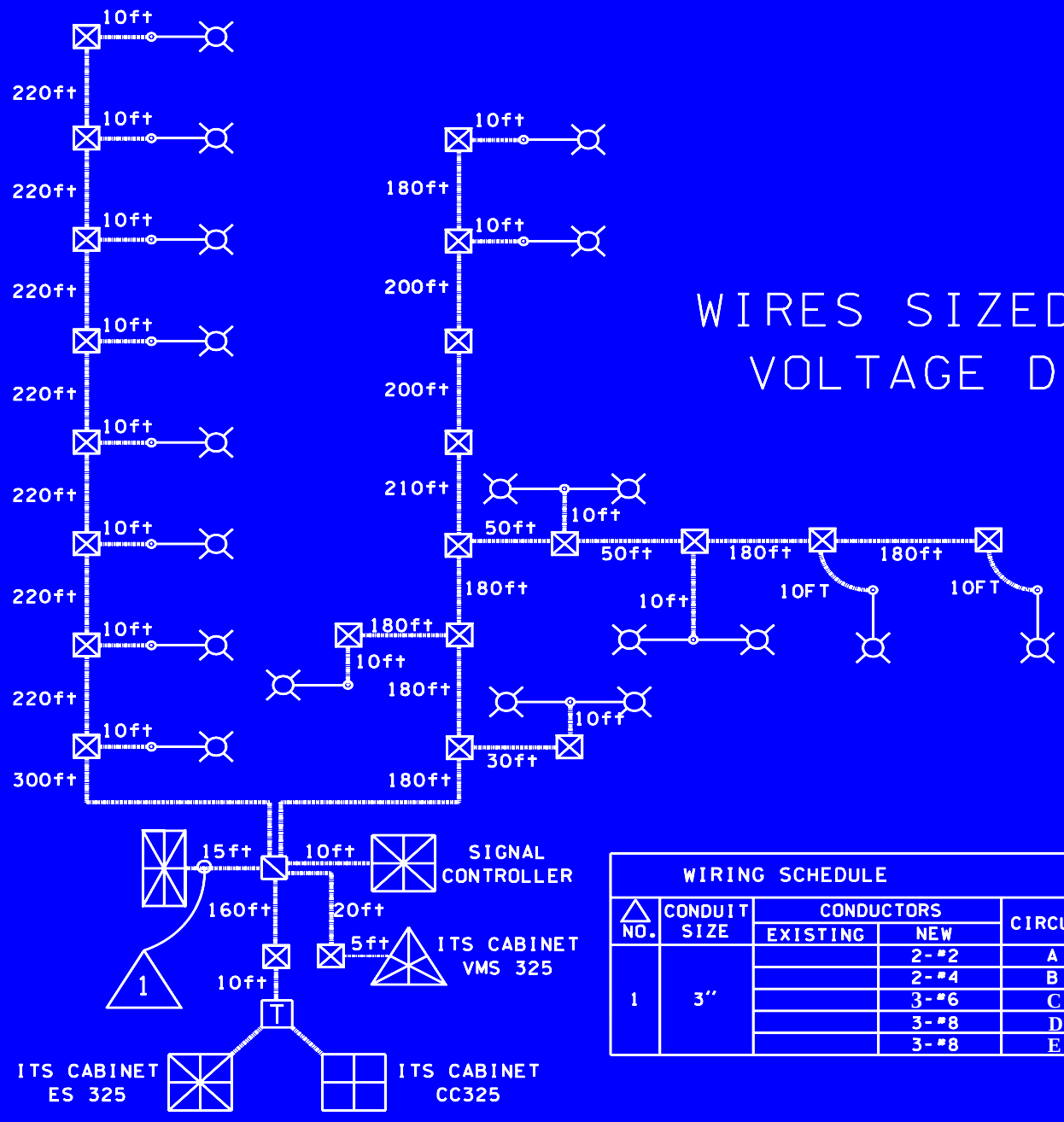

WIRING SCHEDULE				SERVICE NO.	
△ NO.	CONDUIT SIZE	CONDUCTORS EXISTING	CONDUCTORS NEW	CIRCUIT	COMMENTS
1	3"		2-#2	A	LIGHTING SYSTEM A
			2-#4	B	LIGHTING SYSTEM B
			3-#6	C	ITS-ES 325 & CC 325
			3-#8	D	ITS-VMS 325
			3-#8	E	TRAFFIC SIGNAL

Check Ampacity of Wire - Continued

- **Illumination Circuit A load = *16.8 amps***

  Reduce ampacity by 50%.

#2 wire ampacity = 115 amps x 0.5 = 57.5 amps.

16.8 amps < 57.5 amps. **OK**

Check Ampacity of Wire - Continued

- **<u>Illumination Circuit</u> <u>B</u> <u>load</u> = 23.1 amps**

  Reduce ampacity by 50%.

  <u>#4 wire</u> ampacity = 85 amps x 0.5 = 42.5 amps.

  23.1 amps < 42.5 amps. **OK**

Check Ampacity of Wire - Continued

- **ITS-ES 325 & CC 325-Circuit C load = 31.25 amps**

  Reduce ampacity by 50%.

  #6 wire ampacity = 65 amps x 0.5 = 32.5 amps.

  31.25 amps < 32.5 amps. **OK.**

Check Ampacity of Wire - Continued

- **ITS-VMS 325-Circuit D load = 31.5 amps**

  Reduce ampacity by 50%.

  #8 wire ampacity = 50 amps x 0.5 = 25 amps.

  31.5 amps > 25 amps. NOT OK.

  #6 wire ampacity = 65 amps x 0.5 = 32.5 amps.

  31.5 amps < 32.5 amps. **OK.**

Check Ampacity of Wire - Continued

- **Signal - Circuit E load = 41.73 amps**

  Reduce ampacity by

  #8 wire ampacity = 50 amps x 0.5 = 25 amps.

  41.73 amps > 25 amps. **NOT OK.**

  #6 wire ampacity = 65 amps x 0.5 = 32.5 amps.

  41.73 > 32.5 amps. **NOT OK.**

  #4 wire ampacity 85 amps x 0.5= 42.5 amps.

  41.73 < 42.5 amps. **OK**

WIRES SIZED FOR VOLTAGE DROP AND AMPACITY

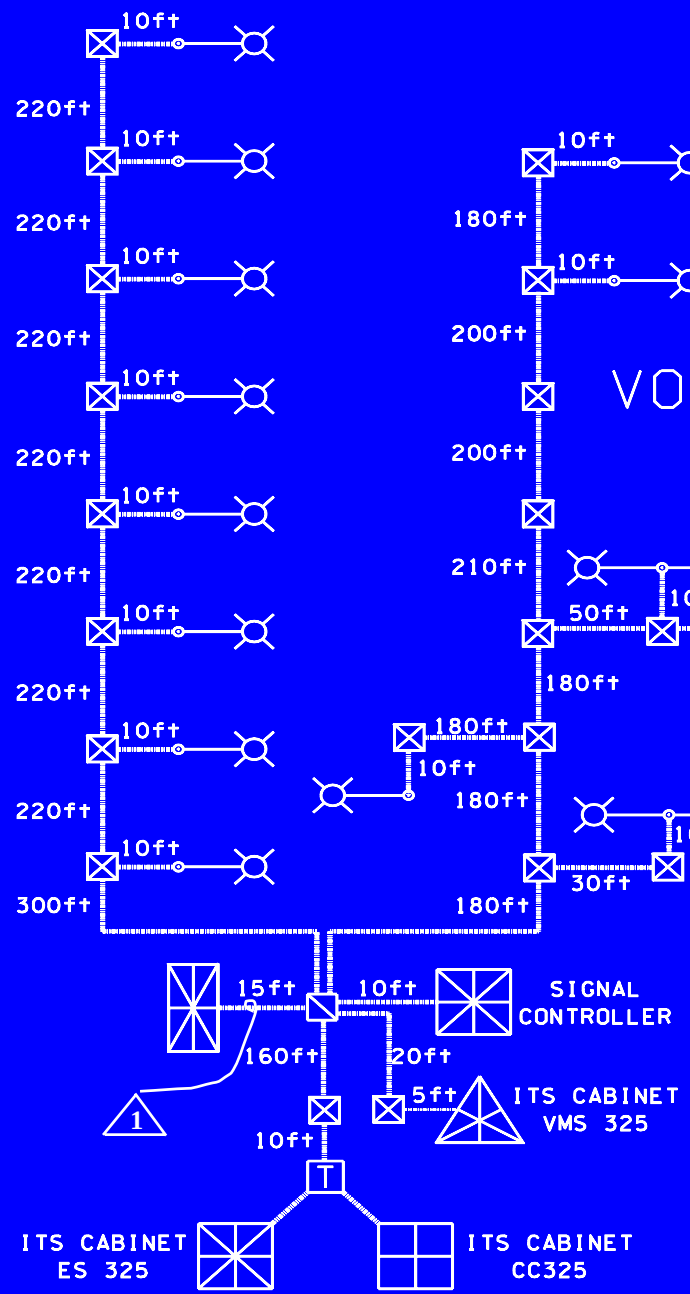

WIRING SCHEDULE				SERVICE NO.	
NO.	CONDUIT SIZE	CONDUCTORS EXISTING	CONDUCTORS NEW	CIRCUIT	COMMENTS
1	3"		2-#2	A	LIGHTING SYSTEM A
			2-#4	B	LIGHTING SYSTEM B
			2-#6	C	ITS-ES 325 & CC 325
			3-#6	D	ITS-VMS 325
			3-#4	E	TRAFFIC SIGNAL

Any Questions?