APPROVED
Washington State
Department of Transportation
HQ Traffic Operations Office
DATE December 1, 2009 TAT

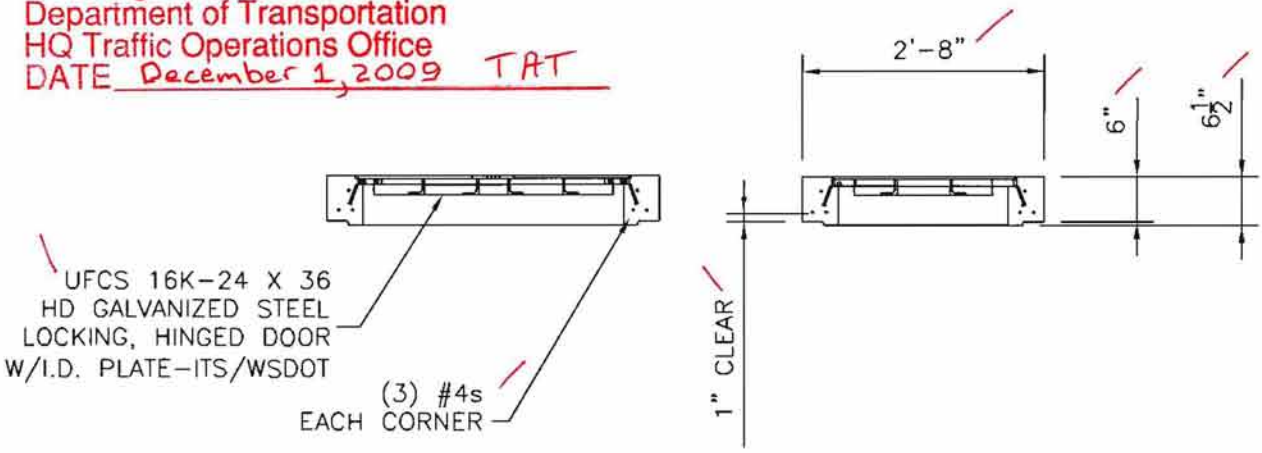

TOP SLAB SECTION

SCALE: 1/2" = 1'-0"

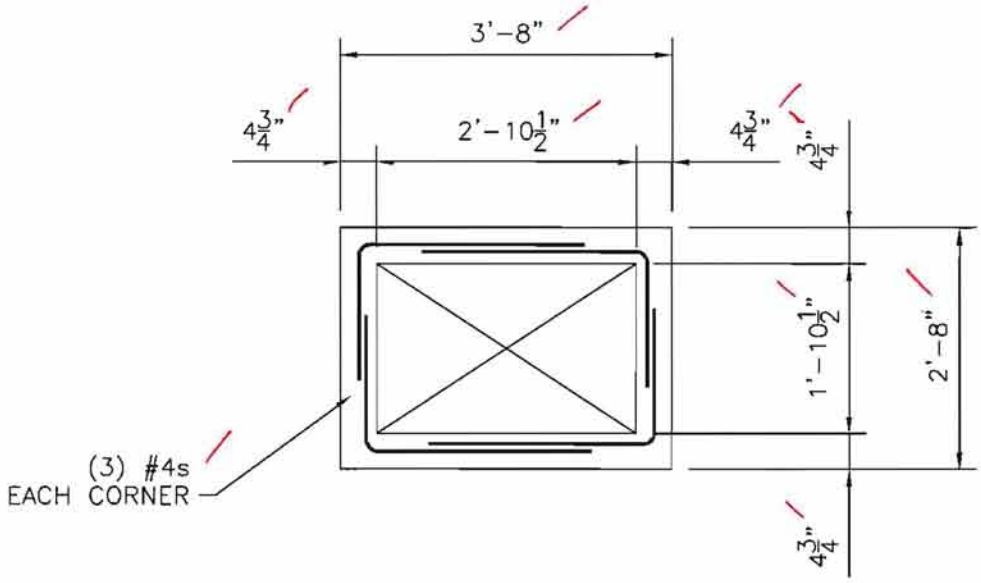

TOP SLAB PLAN

SCALE: 1/2" = 1'-0"

Hanson
HEIDELBERG CEMENT Group
4601 SOUTH ORCHARD
TACOMA, WASHINGTON 98466
(253) 475-8888
FAX (253) 471-4747

WSDOT "ITS" STANDARD DUTY 233 J-15A PULL BOX LID						
REINFORCING					CONTRACTOR APPROVAL	
				DRAWN TC	10-05-09	PBR1
				CHECKED GS	10-05-09	

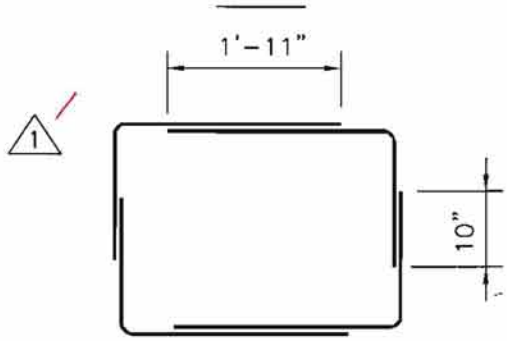

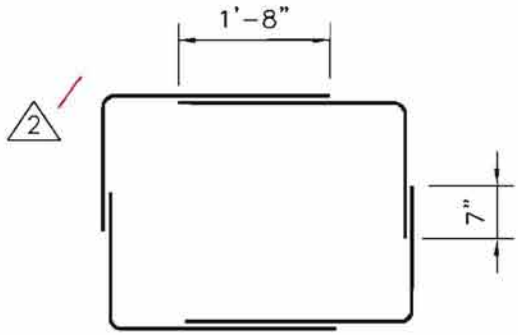

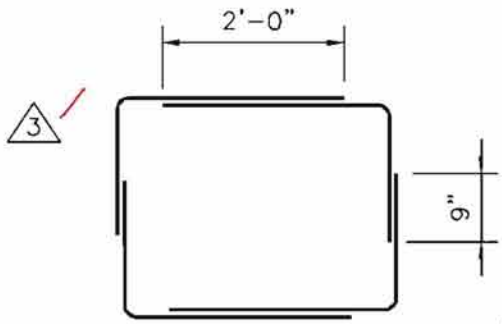

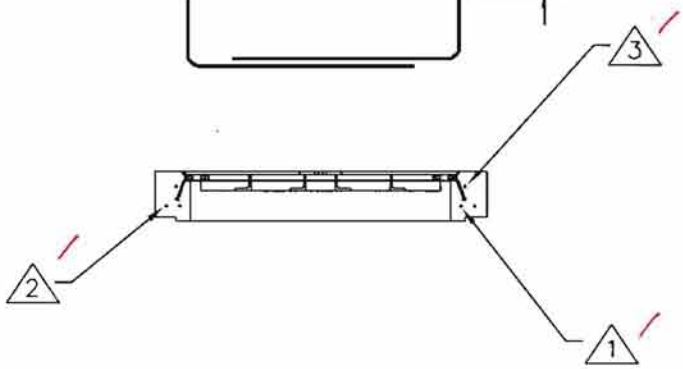

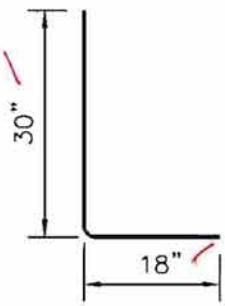

#4 CORNER BAR 1 2 3

APPROVED
Washington State
Department of Transportation
HQ Traffic Operations Office
DATE December 1, 2009 TAT

Hanson
HEIDELBERG CEMENT Group
4601 SOUTH ORCHARD
TACOMA, WASHINGTON 98466
(253) 475-8888
FAX (253) 471-4747

WSDOT "ITS" STANDARD DUTY 233 J-15A PULL BOX LID

REINFORCING

CONTRACTOR APPROVAL

				DRAWN TC	10-05-09	PBR2
				CHECKED GS	10-05-09	

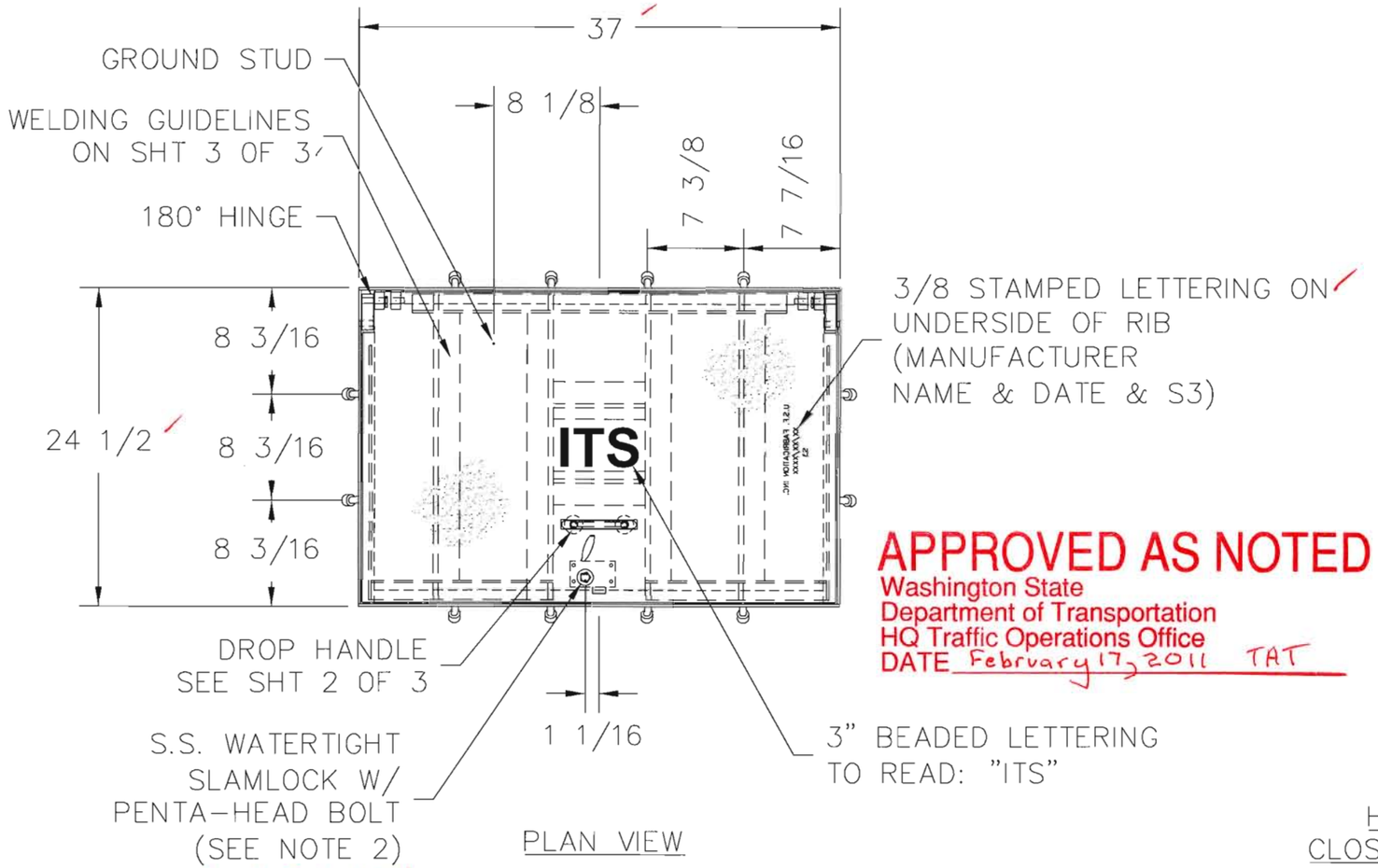

PLAN VIEW

Recess top of Penta-head bolt 1/8 inch minimum.

APPROVED AS NOTED
Washington State
Department of Transportation
HQ Traffic Operations Office
DATE February 17, 2011 TAT

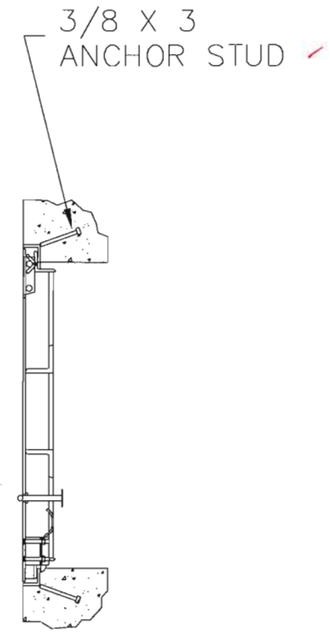

HATCH IN CLOSED POSITION

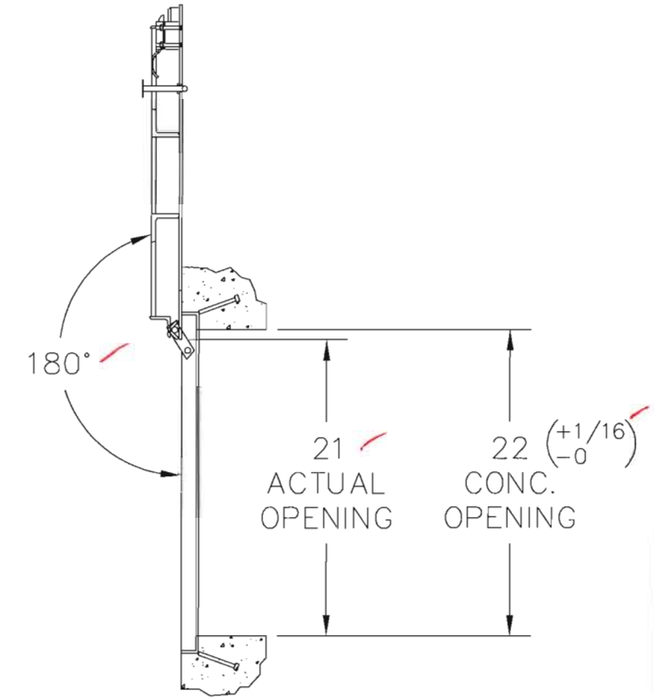

HATCH IN OPEN POSITION

NOTES:

1– MATERIAL: A36, STEEL HOT DIPPED GALVANIZED AFTER FABRICATION. (COVER PLATE IS SlipNot GRADE 3 GALVANIZED)

2– 316 STAINLESS STEEL NUTS & BOLTS AND SLAMLOCK.

3– APPROX. HATCH WEIGHT: 137 LBS.

4– 1/4–20 UNC X 3/4 SS GROUND STUD W/2 SS NUTS AND 2 SS WASHERS ATTACHED & COATED WITH ANTI–SEIZE

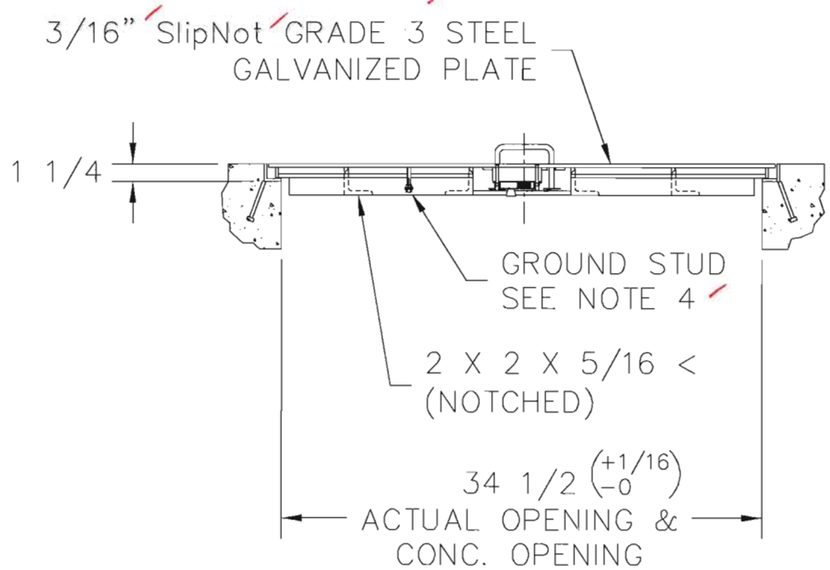

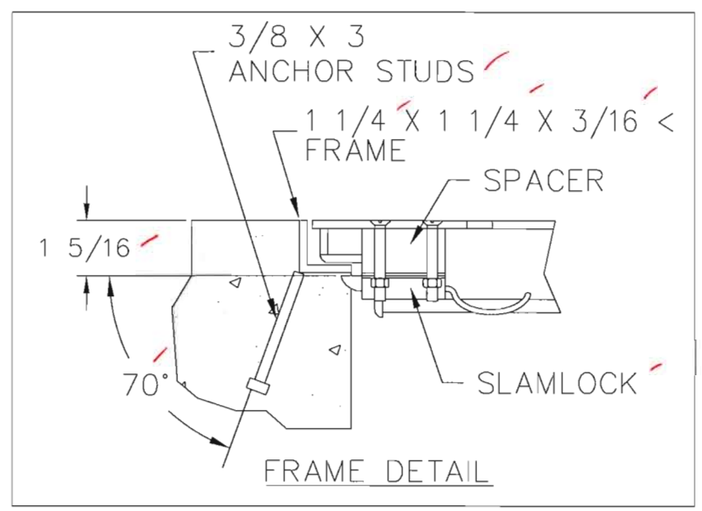

FRAME DETAIL

THIS DRAWING IS THE SOLE PROPERTY OF

PUBLICATION AND DISTRIBUTION IN WHOLE OR IN PART IS EXPRESSLY PROHIBITED WITHOUT PRIOR WRITTEN CONSENT

U.S.F. FABRICATION INC.
HIALEAH, FLORIDA

UFCS 16K – 24 X 36 – STEEL (GALV.) W/ SLIPNOT PLATE COVER, SLAMLOCK, 3" BEADED LETTERING & 180° HINGES

DWN. BY: G.G.	SCALE: 1=12	QUOTE#		DATE: 2/3/11
CHK. BY:	DWG.# 65984	SHEET SIZE: B	SHEET NO: 1 OF 5	REV:

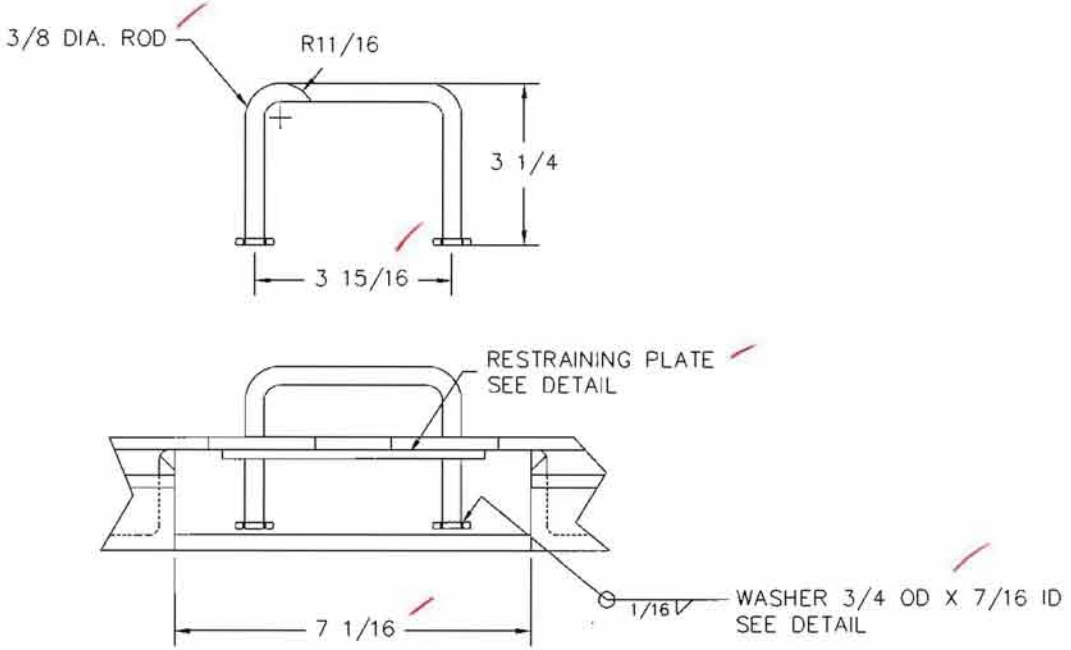

DROP HANDLE DETAIL
SCALE: 3X

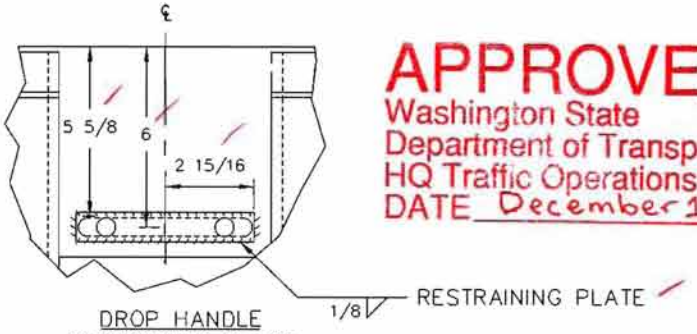

DROP HANDLE
RESTRAINING PLATE
SCALE: 3X

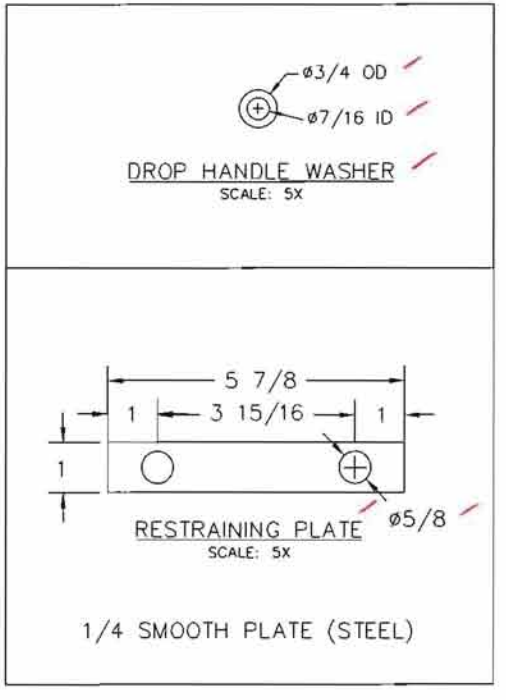

APPROVED
Washington State
Department of Transportation
HQ Traffic Operations Office
DATE December 1, 2009 TAT

U.S.F. FABRICATION INC. HIALEAH, FLORIDA			
UFCS 16K – 24 X 36– STEEL W/SLAMLOCK, I.D. PLATE, & 180° HINGES			
DWN. BY: G.G.	SCALE: 1=12	QUOTE# 56753	DATE: 2 1/3/09
CHK. BY:	DWG NO: 56753-3	SHEET 2 OF 3	REV:

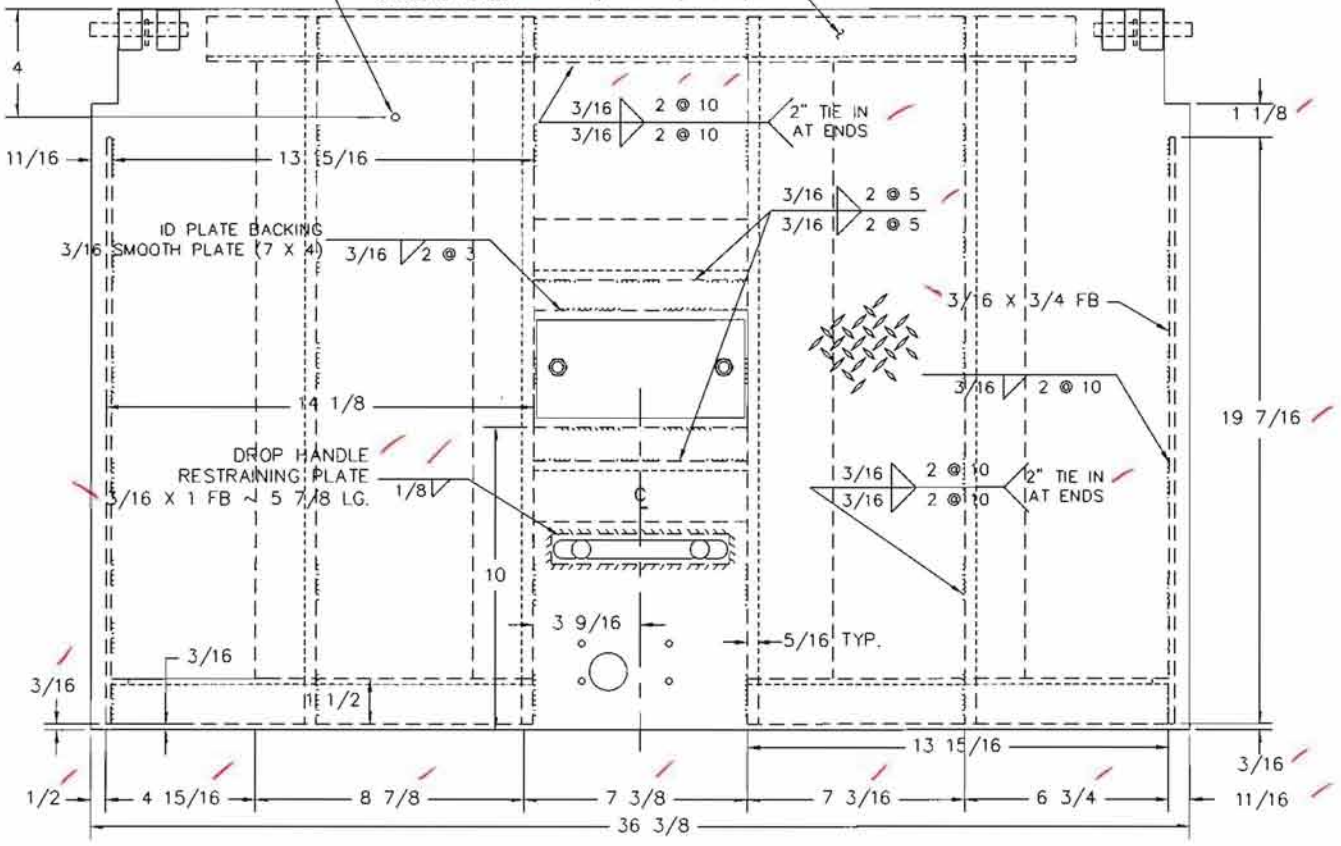

UNDERSIDE VIEW OF COVER ONLY
SCALE. 3X

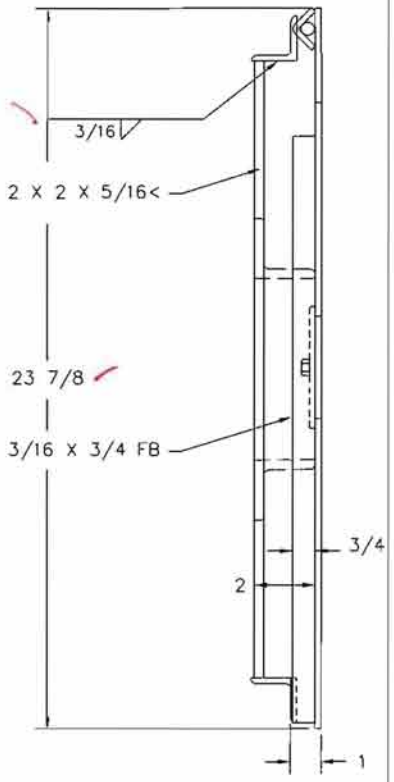

SIDE VIEW OF COVER ONLY
SCALE. 3X

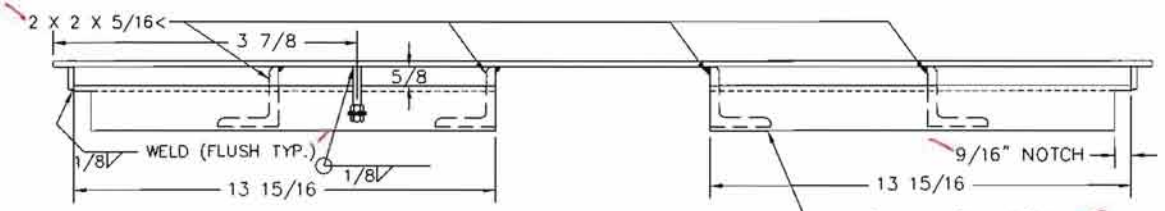

FRONT VIEW OF COVER ONLY
SCALE. 3X

U.S.F. FABRICATION INC.
HIALEAH, FLORIDA

UFCS 16K – 24 X 36– STEEL
W/SLAMLOCK, I.D. PLATE, & 180° HINGES

DWN BY: G.G.	SCALE: 1=12	QUOTE# 56753	DATE 2 1/3/09
CHK. BY:	DWG. NO. 56753-3	SHEET 3 OF 3	REV:

APPROVED
Washington State
Department of Transportation
HQ Traffic Operations Office
DATE December 1, 2009 TAT