**NOTE:**
PENTA HEAD BOLT IS RECESSED MINIMUM ⅛" BELOW PLATE SURFACE.

PENTA HEAD BOLT TO BE LIBERALLY COATED WITH ANTI-SEIZE COMPOUND.

APPROVED
Washington State
Department of Transportation
HQ Traffic Operations Office
DATE July 30, 2012 TRT

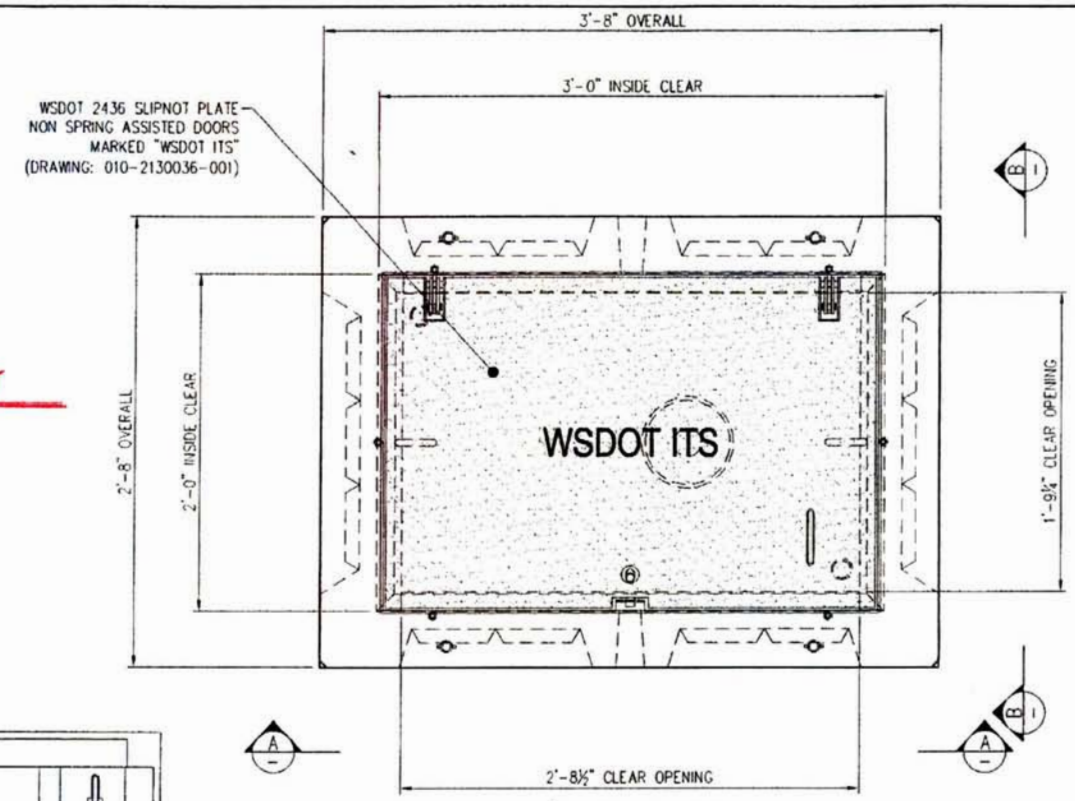


PLAN VIEW

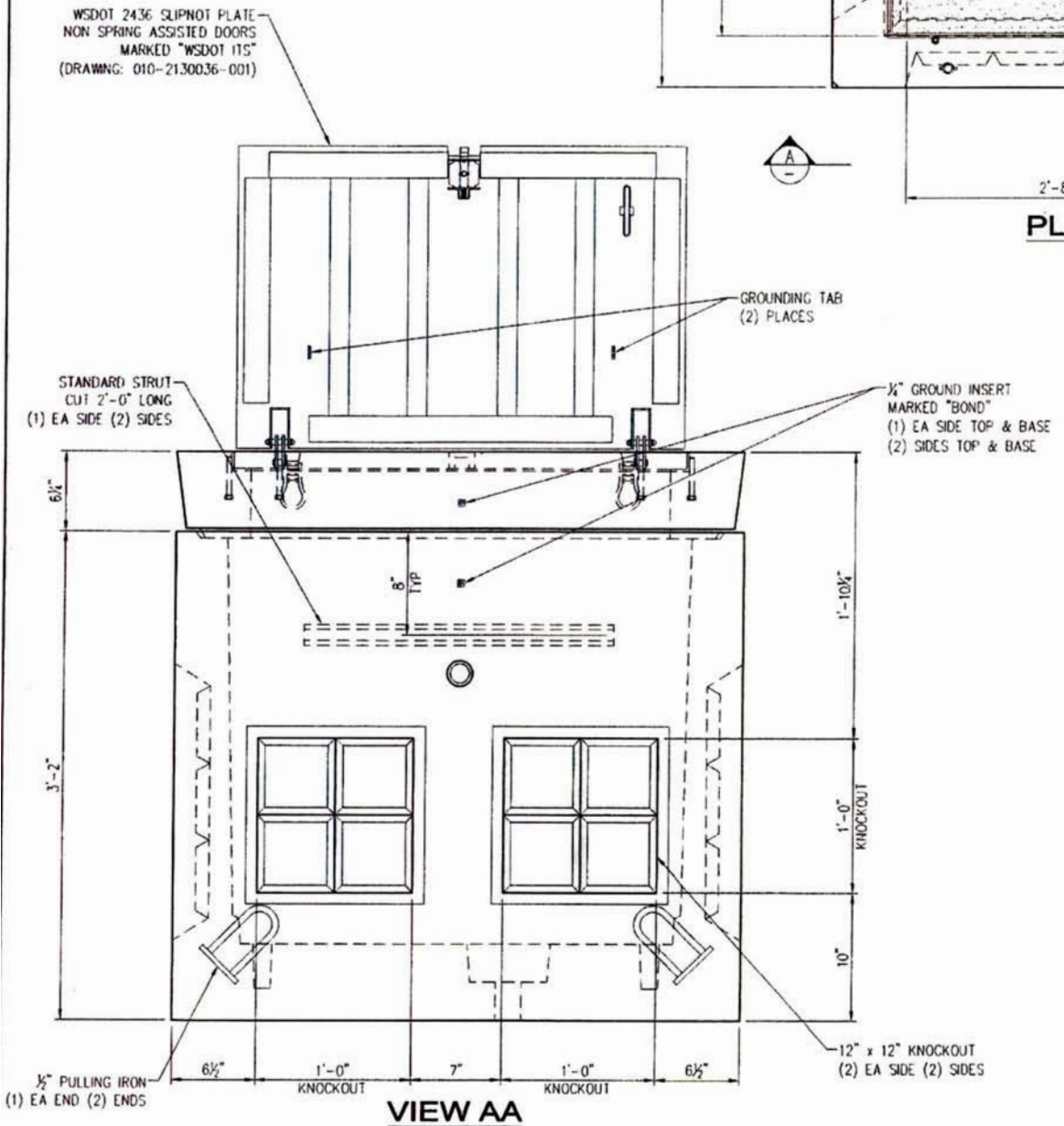


VIEW AA

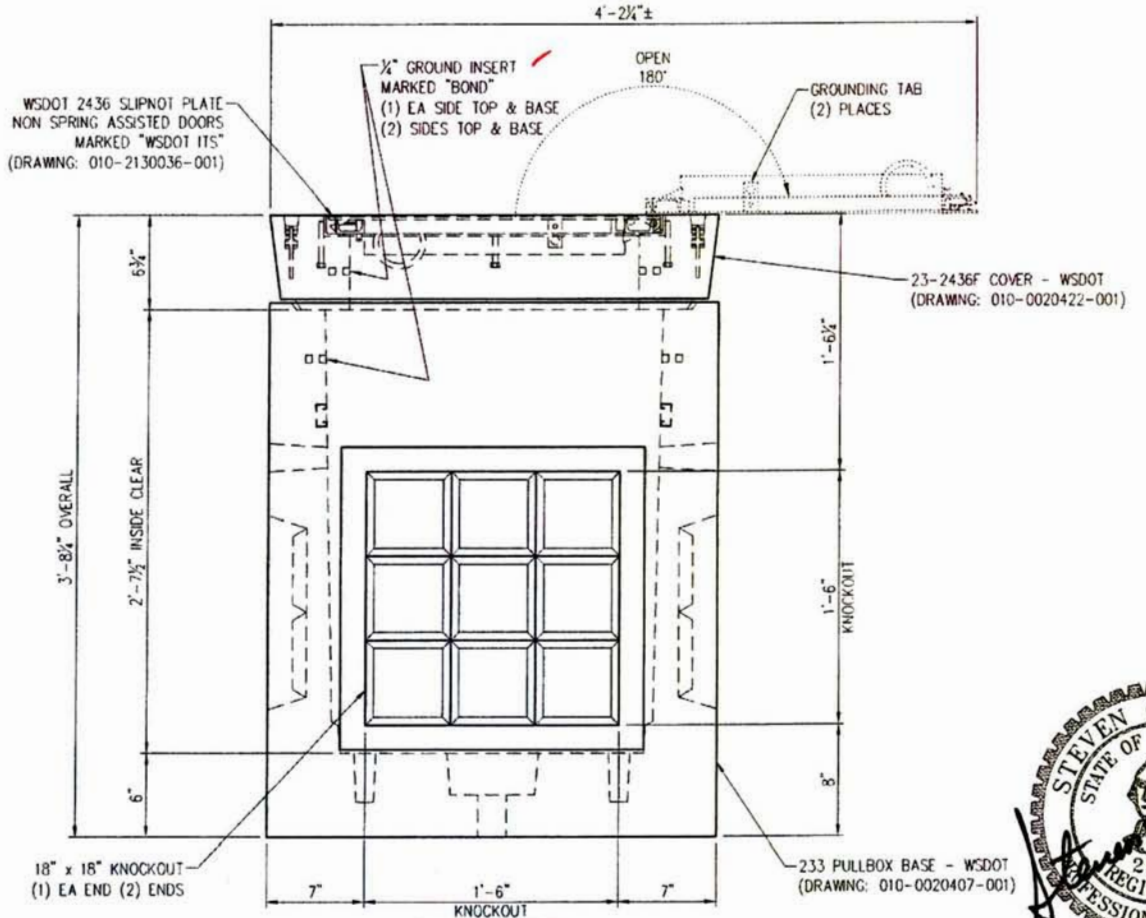


VIEW BB

## STRUCTURAL NOTES

1. CONCRETE: 28 DAY COMPRESSIVE STRENGTH f'c = 4000 psi
2. REBAR: ASTM A-615 GRADE 60
3. MESH: ASTM A-185 GRADE 65
4. DESIGN: ACI-318-05 BUILDING CODE
5. LOADS: STANDARD DUTY LOADING, 22,500 lbs
   ASTM C-857 "MINIMUM STRUCTURAL DESIGN LOADING FOR UNDERGROUND PRECAST CONCRETE UTILITY STRUCTURES"
   30% IMPACT FOR LESS THAN 2'-0" SOIL COVER
   SOIL DENSITY 120 pcf
   40 pcf E.F.P. LATERAL SOIL PRESSURE ABOVE WATERTABLE
   80 pcf E.F.P. LATERAL SOIL PRESSURE BELOW WATERTABLE
   230 psf LIVE LOAD SURCHARGE
   NO LIVE LOAD SURCHARGE FOR SOIL COVER > 8'-0"
   TOP OF VAULT AT FINISHED GRADE
   WATERTABLE 5'-0" BELOW FINISHED GRADE (ASSUMED)

## GENERAL NOTES

1. CUSTOMER TO:
   VERIFY ALL VAULT FEATURES
   DO ALL GROUTING & EPOXY OF VAULTS, HOLES & SEAMS (USING NON-SHRINK GROUT)
   SUPPLY & INSTALL ALL PIPING & ELECTRICAL
   INSTALL ALL LADDERS
   DO ALL PAINTING

## SHIPPING WEIGHT

| | |
|---|---|
| 23-2436F COVER: | 490 lbs |
| 233 PULLBOX BASE: | 1,785 lbs |
| TOTAL: | 2,275 lbs |

STEVEN C. HIESTER
STATE OF WASHINGTON
21630
REGISTERED
PROFESSIONAL ENGINEER
7/23/12

| LTR. | REVISION | DATE | BY |
|---|---|---|---|
| C | CHANGED DRAWING NUMBER OF VAULT COMPONENTS | 8/15/11 | MLF |
| - | (SEE CAD FILE FOR COMPLETE REVISION HISTORY) | - | - |

THIS DOCUMENT IS THE PROPERTY OF OLDCASTLE PRECAST, INC. IT IS SUBMITTED FOR REFERENCE PURPOSES ONLY AND SHALL NOT BE USED IN ANY WAY INJURIOUS TO THE INTERESTS OF SAID COMPANY. COPYRIGHT © 2010 Oldcastle Precast, Inc. All Rights Reserved

| | | | |
|---|---|---|---|
| SALES | | DATE | 4/6/10 |
| DESIGNER | JG | WEIGHT | 2,275 lbs |
| CHECKED | | CALC NO | |

Oldcastle Precast®
P.O. BOX 565 AUBURN, WA 98071-0565
PHONE: 800-892-1538 FAX: 253-735-4201

233 STANDARD DUTY PULLBOX - WSDOT
233 VAULT: 3'-0"L x 2'-0"W x 2'-7 1/2"H (INSIDE)
CUSTOMER STANDARD PRODUCT

CUSTOMER: WASHINGTON STATE DOT
DRAWING NUMBER: 010-X803410-001
SHEET: 1 of 1
REVISION: C

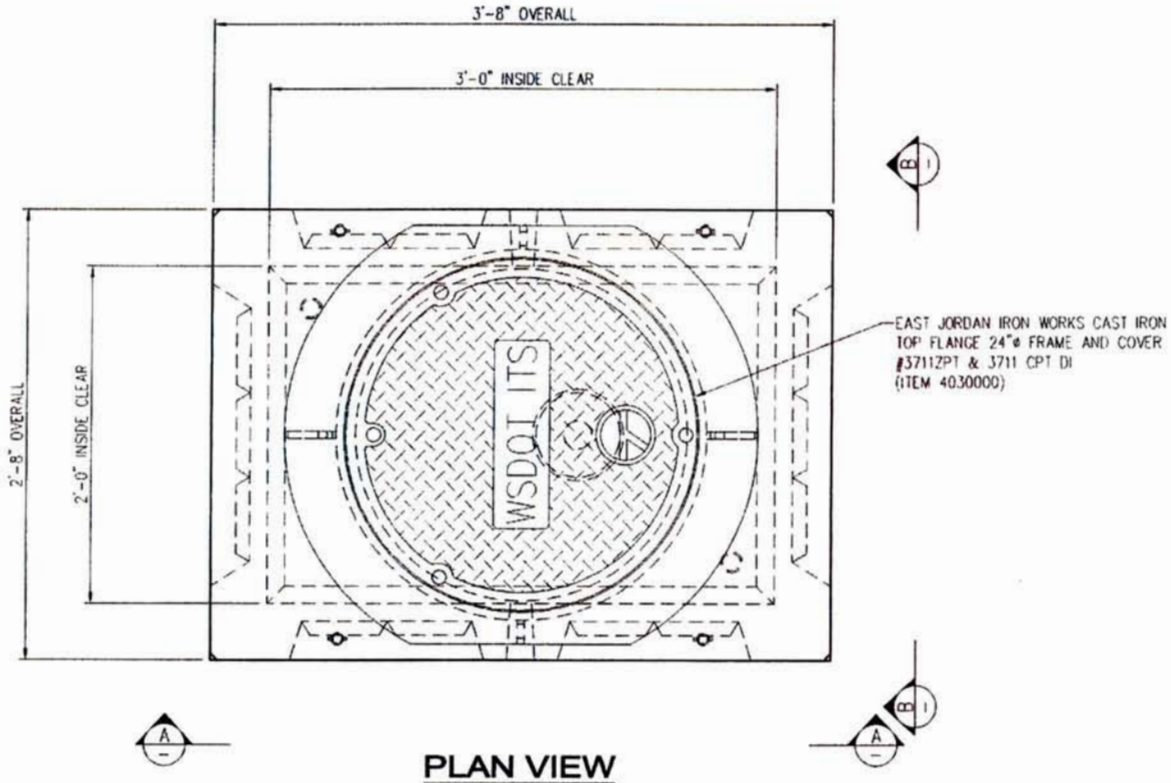


## PLAN VIEW

**NOTE:**
PENTA HEAD BOLT IS RECESSED MINIMUM ⅛" BELOW PLATE SURFACE.

PENTA HEAD BOLT TO BE LIBERALLY COATED WITH ANTI-SEIZE COMPOUND.

APPROVED
Washington State
Department of Transportation
HQ Traffic Operations Office
DATE July 30, 2012 TAT

### STRUCTURAL NOTES

1. CONCRETE: 28 DAY COMPRESSIVE STRENGTH f'c = 4000 psi
2. REBAR: ASTM A-615 GRADE 60
3. MESH: ASTM A-185 GRADE 65
4. DESIGN: ACI-318-05 BUILDING CODE
5. LOADS: HEAVY DUTY LOADING, 46,000 lbs
   ASTM C-857 "MINIMUM STRUCTURAL DESIGN LOADING FOR UNDERGROUND PRECAST CONCRETE UTILITY STRUCTURES"
   30% IMPACT FOR LESS THAN 2'-0" SOIL COVER
   SOIL DENSITY 120 pcf
   40 pcf E.F.P. LATERAL SOIL PRESSURE ABOVE WATERTABLE
   80 pcf E.F.P. LATERAL SOIL PRESSURE BELOW WATERTABLE
   230 psf LIVE LOAD SURCHARGE
   NO LIVE LOAD SURCHARGE FOR SOIL COVER > 8'-0"
   TOP OF VAULT AT FINISHED GRADE
   WATERTABLE 5'-0" BELOW FINISHED GRADE (ASSUMED)

### GENERAL NOTES

1. CUSTOMER TO:
   VERIFY ALL VAULT FEATURES
   DO ALL GROUTING & EPOXY OF VAULTS, HOLES & SEAMS (USING NON-SHRINK GROUT)
   SUPPLY & INSTALL ALL PIPING & ELECTRICAL
   INSTALL ALL LADDERS
   DO ALL PAINTING

### SHIPPING WEIGHT

| | |
|---|---|
| 23-25F COVER: | 975 lbs |
| 233 PULLBOX BASE: | 1,785 lbs |
| TOTAL: | 2,760 lbs |

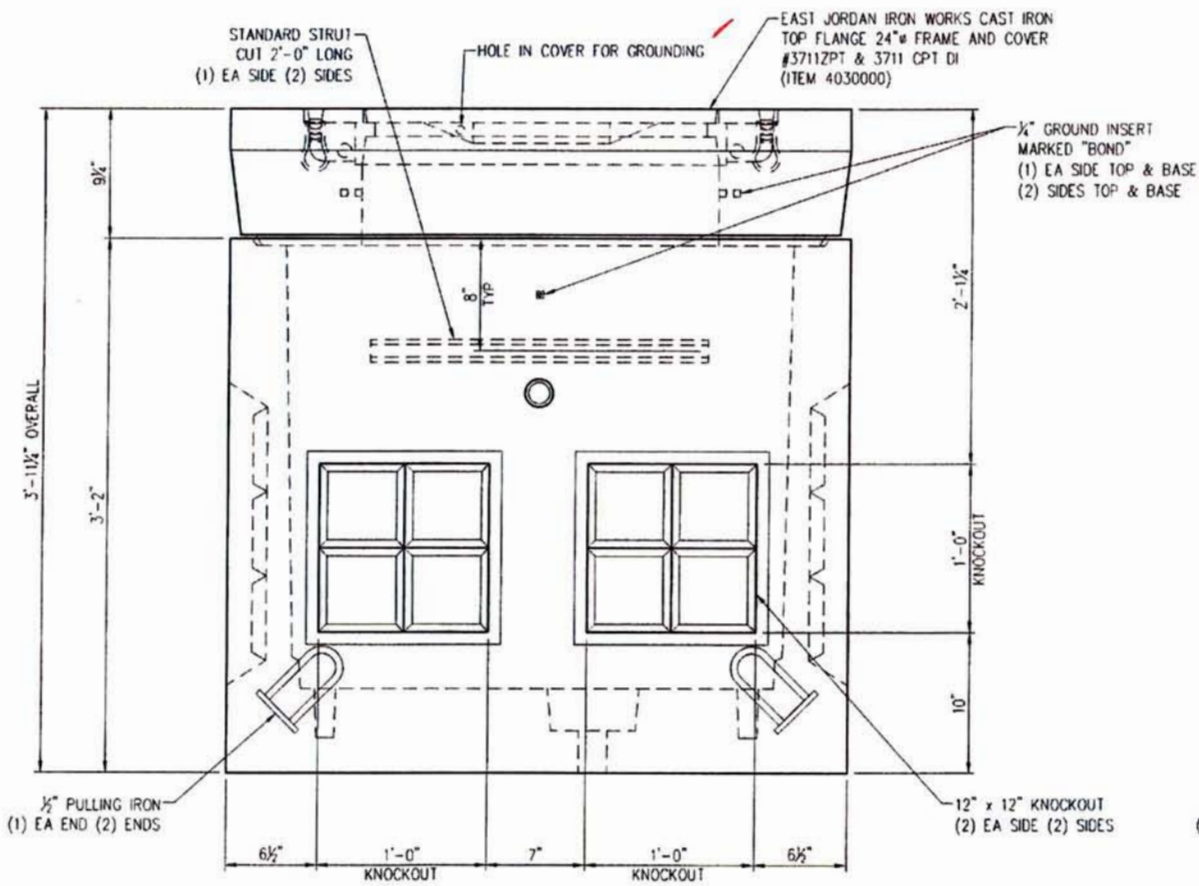


## VIEW AA

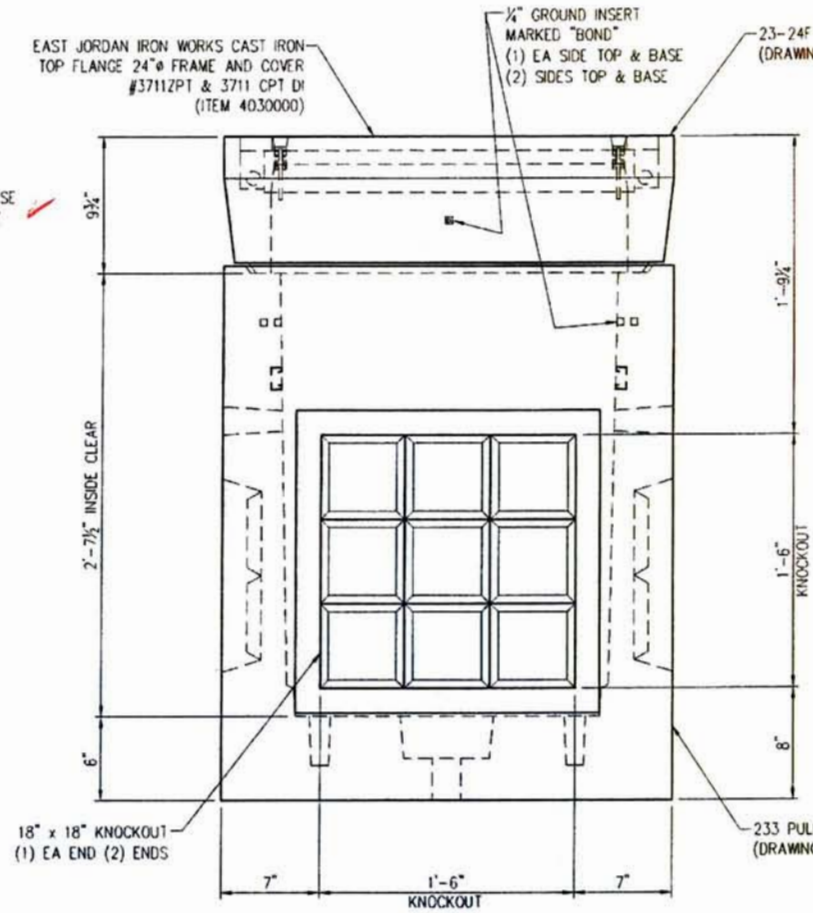


## VIEW BB

STEVEN C. HIESTER
STATE OF WASHINGTON
21830
REGISTERED
PROFESSIONAL ENGINEER
7/23/12

| LTR. | REVISION | DATE | BY |
|---|---|---|---|
| C | CHANGED DRAWING NUMBER OF VAULT COMPONENTS | 8/15/11 | MLF |
| - | (SEE CAD FILE FOR COMPLETE REVISION HISTORY) | - | - |

THIS DOCUMENT IS THE PROPERTY OF OLDCASTLE PRECAST, INC. IT IS SUBMITTED FOR REFERENCE PURPOSES ONLY AND SHALL NOT BE USED IN ANY WAY INJURIOUS TO THE INTERESTS OF SAID COMPANY. COPYRIGHT © 2010 Oldcastle Precast, Inc. All Rights Reserved

| | | | |
|---|---|---|---|
| SALES | | DATE | 4/6/10 |
| DESIGNER | JG | WEIGHT | 2,760 lbs |
| CHECKED | | CALC NO | |

Oldcastle Precast®
P.O. BOX 505 AUBURN, WA 98071-0505
PHONE: 800-892-1538 FAX: 253-735-4201

233 HEAVY DUTY PULLBOX - WSDOT
233 VAULT: 3'-0"L x 2'-0"W x 2'-7 1/2"H (INSIDE)
CUSTOMER STANDARD PRODUCT

| | | | |
|---|---|---|---|
| CUSTOMER | WASHINGTON STATE DOT | SHEET | 1 of 1 |
| DRAWING NUMBER | 010-X803410-002 | REVISION | C |

**NOTE:**
PENTA HEAD BOLT IS RECESSED MINIMUM ⅛" BELOW PLATE SURFACE.

PENTA HEAD BOLT TO BE LIBERALLY COATED WITH ANTI-SEIZE COMPOUND.

APPROVED
Washington State
Department of Transportation
HQ Traffic Operations Office
DATE July 30, 2012 TAT

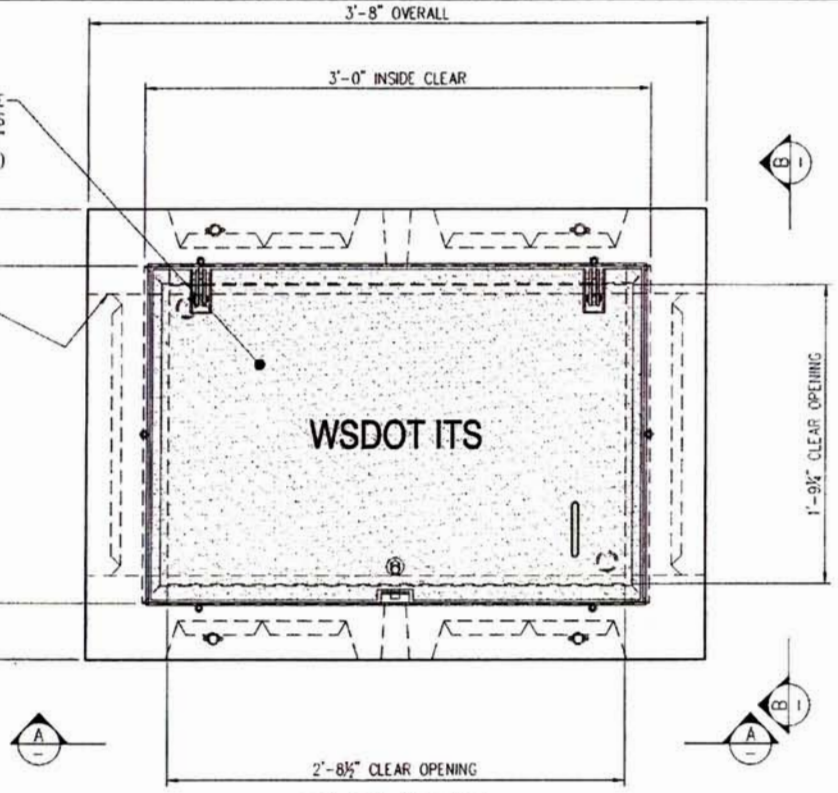


PLAN VIEW

## STRUCTURAL NOTES

1. CONCRETE: 28 DAY COMPRESSIVE STRENGTH f'c = 4000 psi
2. REBAR: ASTM A-615 GRADE 60
3. MESH: ASTM A-185 GRADE 65
4. DESIGN: ACI-318-05 BUILDING CODE
5. LOADS: STANDARD DUTY LOADING, 22,500 lbs
   ASTM C-857 "MINIMUM STRUCTURAL DESIGN LOADING FOR UNDERGROUND PRECAST CONCRETE UTILITY STRUCTURES"
   30% IMPACT FOR LESS THAN 2'-0" SOIL COVER
   SOIL DENSITY 120 pcf
   40 pcf E.F.P. LATERAL SOIL PRESSURE ABOVE WATERTABLE
   80 pcf E.F.P. LATERAL SOIL PRESSURE BELOW WATERTABLE
   230 psf LIVE LOAD SURCHARGE
   NO LIVE LOAD SURCHARGE FOR SOIL COVER > 8'-0"
   TOP OF VAULT AT FINISHED GRADE
   WATERTABLE 5'-0" BELOW FINISHED GRADE (ASSUMED)

## GENERAL NOTES

1. CUSTOMER TO:
   VERIFY ALL VAULT FEATURES
   DO ALL GROUTING & EPOXY OF VAULTS, HOLES & SEAMS (USING NON-SHRINK GROUT)
   SUPPLY & INSTALL ALL PIPING & ELECTRICAL
   INSTALL ALL LADDERS
   DO ALL PAINTING

## SHIPPING WEIGHT

| | |
|---|---|
| 23-2436F COVER: | 490 lbs |
| 233 SPLIT PULLBOX BASE: | 1,580 lbs |
| TOTAL: | 2,070 lbs |

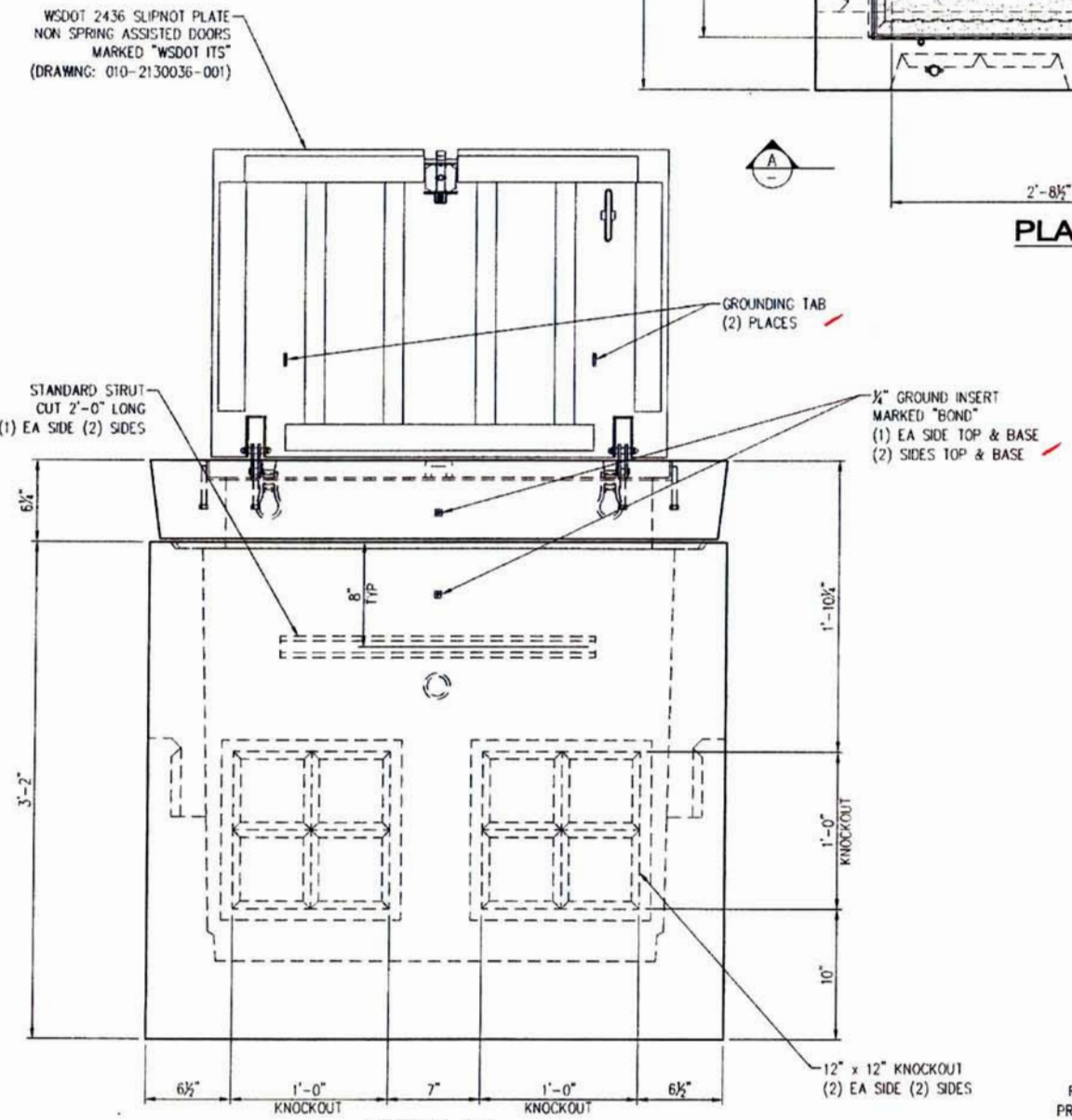


VIEW AA

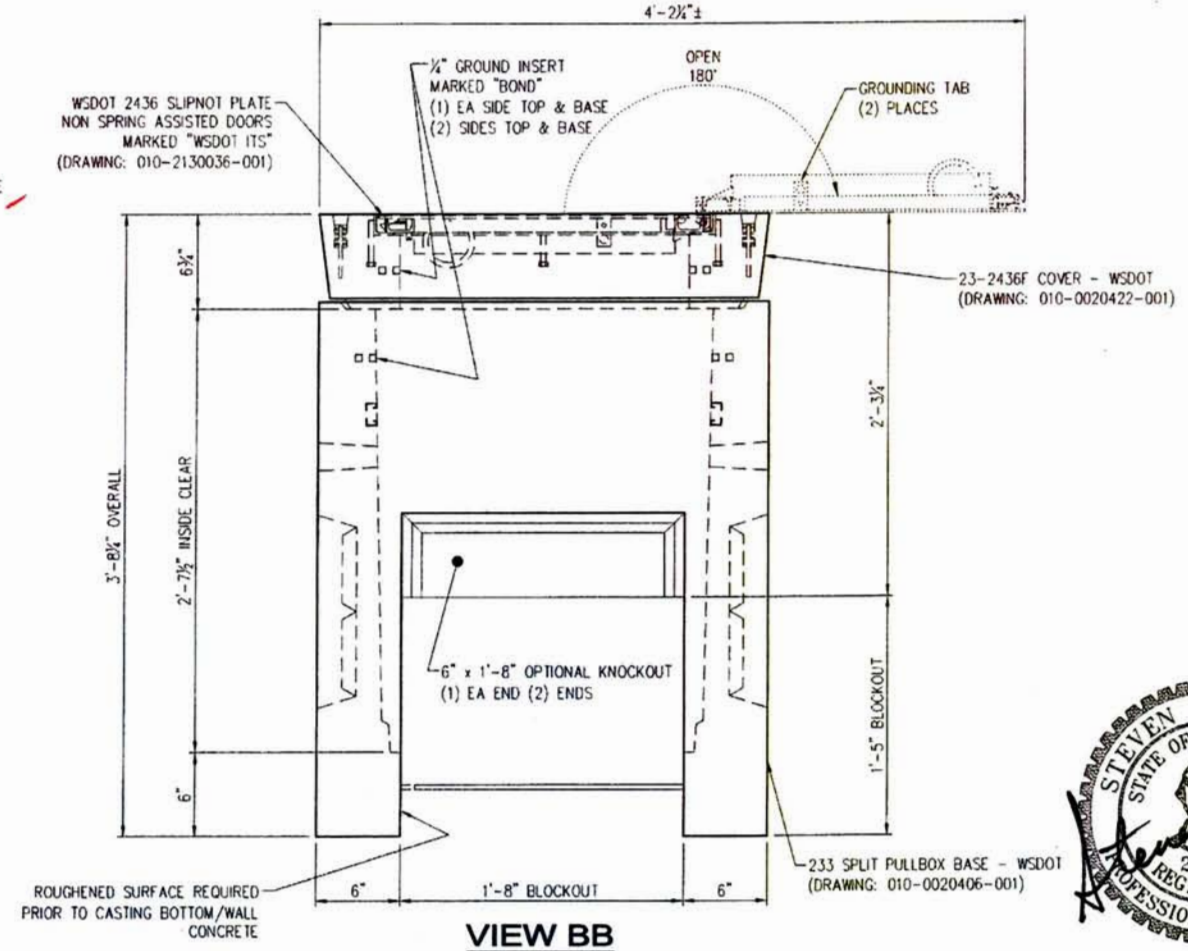


VIEW BB

STEVEN C. HIESTER
STATE OF WASHINGTON
21630
REGISTERED
PROFESSIONAL ENGINEER
7/23/12

| LTR. | REVISION | DATE | BY |
|---|---|---|---|
| C | CHANGED DRAWING NUMBER OF VAULT COMPONENTS | 8/15/11 | MLF |
| - | (SEE CAD FILE FOR COMPLETE REVISION HISTORY) | - | - |

THIS DOCUMENT IS THE PROPERTY OF OLDCASTLE PRECAST, INC. IT IS SUBMITTED FOR REFERENCE PURPOSES ONLY AND SHALL NOT BE USED IN ANY WAY INJURIOUS TO THE INTERESTS OF SAID COMPANY. COPYRIGHT © 2010 Oldcastle Precast, Inc. All Rights Reserved

| | | | |
|---|---|---|---|
| SALES | | DATE | 4/6/10 |
| DESIGNER | JG | WEIGHT | 2,070 lbs |
| CHECKED | | CALC NO | |

Oldcastle Precast
P.O. BOX 508 AUBURN, WA 98071-0508
PHONE: 800-892-1538 FAX: 253-735-4201

233 STD DUTY SPLIT PULLBOX - WSDOT
233 VAULT: 3'-0"L x 2'-0"W x 2'-7 1/2"H (INSIDE)
CUSTOMER STANDARD PRODUCT

CUSTOMER: WASHINGTON STATE DOT
DRAWING NUMBER: 010-X803410-003
SHEET: 1 of 1
REVISION: C

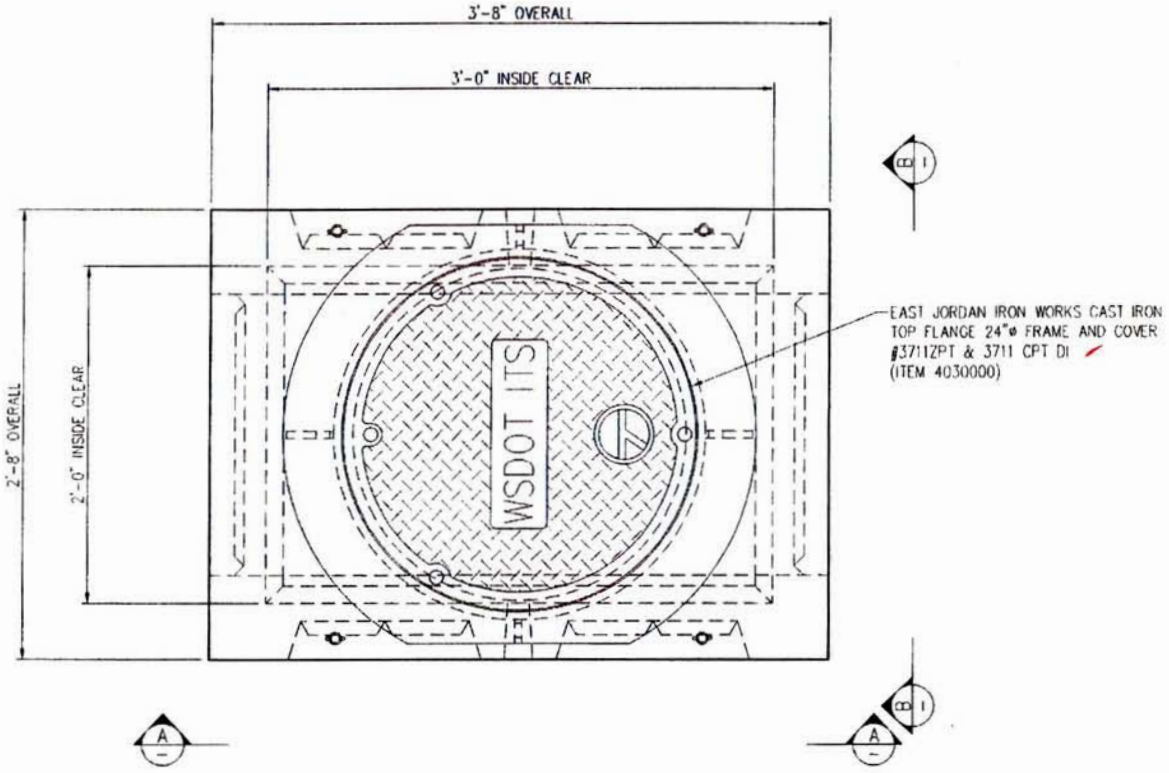


## PLAN VIEW

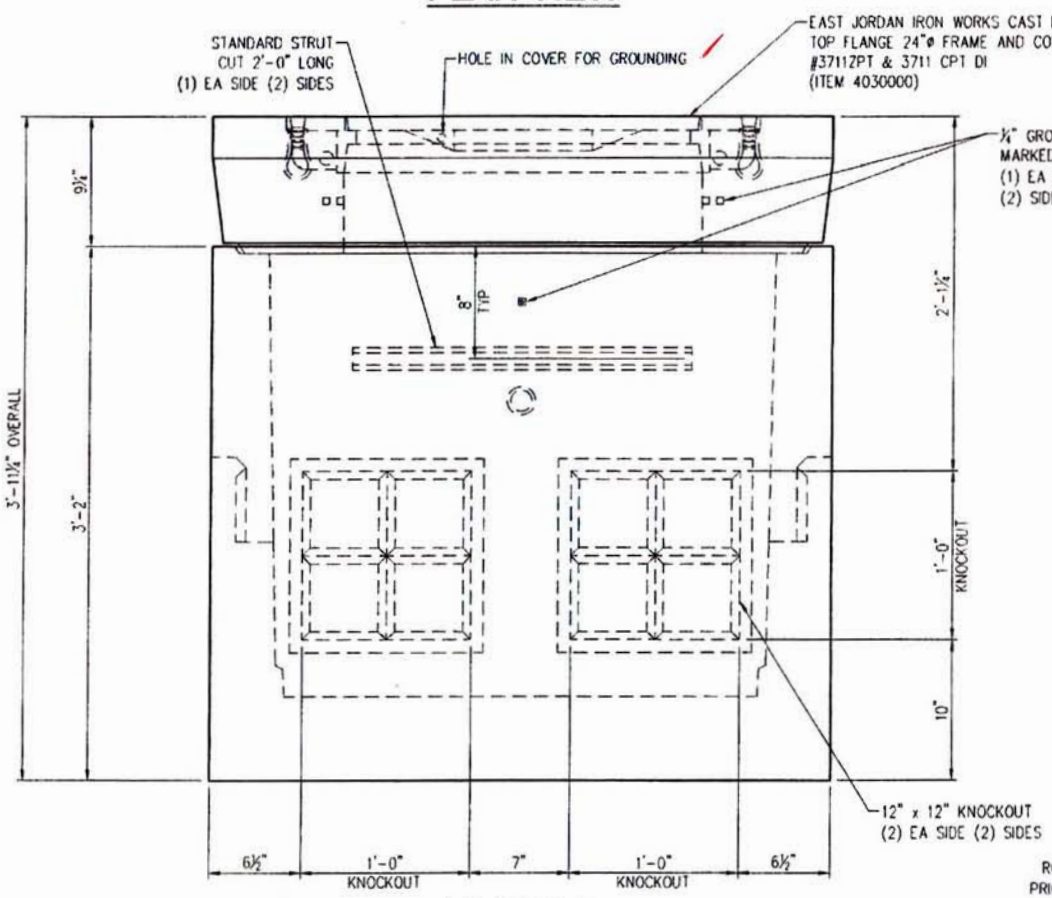


## VIEW AA

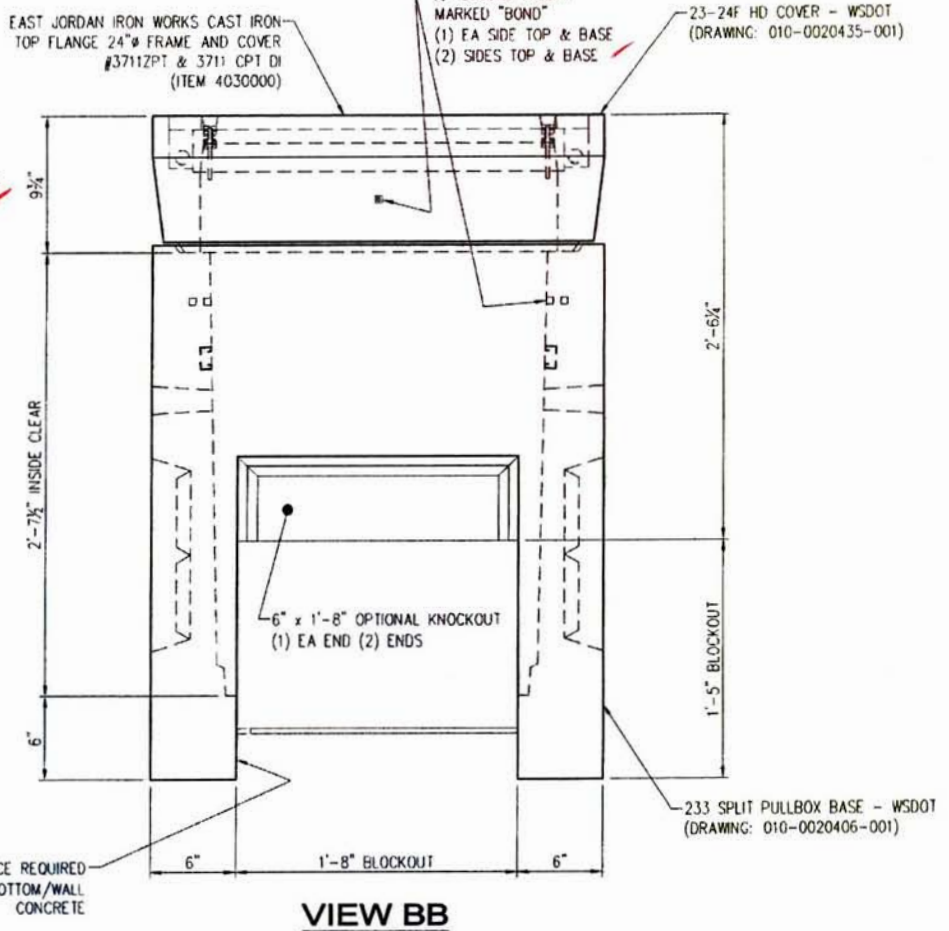


## VIEW BB

**NOTE:**
PENTA HEAD BOLT IS RECESSED MINIMUM ⅛" BELOW PLATE SURFACE.

PENTA HEAD BOLT TO BE LIBERALLY COATED WITH ANTI-SEIZE COMPOUND.

APPROVED
Washington State
Department of Transportation
HQ Traffic Operations Office
DATE July 30, 2012 TAT

### STRUCTURAL NOTES

1. CONCRETE: 28 DAY COMPRESSIVE STRENGTH f'c = 4000 psi
2. REBAR: ASTM A-615 GRADE 60
3. MESH: ASTM A-185 GRADE 65
4. DESIGN: ACI-318-05 BUILDING CODE
5. LOADS: HEAVY DUTY LOADING, 46,000 lbs
   ASTM C-857 "MINIMUM STRUCTURAL DESIGN LOADING FOR UNDERGROUND PRECAST CONCRETE UTILITY STRUCTURES"
   30% IMPACT FOR LESS THAN 2'-0" SOIL COVER
   SOIL DENSITY 120 pcf
   40 pcf E.F.P. LATERAL SOIL PRESSURE ABOVE WATERTABLE
   80 pcf E.F.P. LATERAL SOIL PRESSURE BELOW WATERTABLE
   230 psf LIVE LOAD SURCHARGE
   NO LIVE LOAD SURCHARGE FOR SOIL COVER > 8'-0"
   TOP OF VAULT AT FINISHED GRADE
   WATERTABLE 5'-0" BELOW FINISHED GRADE (ASSUMED)

### GENERAL NOTES

1. CUSTOMER TO:
   VERIFY ALL VAULT FEATURES
   DO ALL GROUTING & EPOXY OF VAULTS, HOLES & SEAMS (USING NON-SHRINK GROUT)
   SUPPLY & INSTALL ALL PIPING & ELECTRICAL
   INSTALL ALL LADDERS
   DO ALL PAINTING

### SHIPPING WEIGHT

| | |
|---|---|
| 23-25F COVER: | 975 lbs |
| 233 SPLIT PULLBOX BASE: | 1,580 lbs |
| TOTAL: | 2,555 lbs |

STEVEN C. HIESTER
STATE OF WASHINGTON
21830
REGISTERED
PROFESSIONAL ENGINEER
7/23/12

| LTR. | REVISION | DATE | BY |
|---|---|---|---|
| C | CHANGED DRAWING NUMBER OF VAULT COMPONENTS | 8/15/11 | MLF |
| - | (SEE CAD FILE FOR COMPLETE REVISION HISTORY) | - | - |

THIS DOCUMENT IS THE PROPERTY OF OLDCASTLE PRECAST, INC. IT IS SUBMITTED FOR REFERENCE PURPOSES ONLY AND SHALL NOT BE USED IN ANY WAY INJURIOUS TO THE INTERESTS OF SAID COMPANY. COPYRIGHT © 2010 Oldcastle Precast, Inc. All Rights Reserved

| | | | |
|---|---|---|---|
| SALES | | DATE | 4/6/10 |
| DESIGNER | JG | WEIGHT | 2,555 lbs |
| CHECKED | | CALC NO | |

Oldcastle Precast®
P.O. BOX 588 AUBURN, WA 98071-0588
PHONE: 800-827-1538 FAX: 253-735-4201

233 HEAVY DUTY SPLIT PULLBOX - WSDOT
233 VAULT: 3'-0"L x 2'-0"W x 2'-7 1/2"H (INSIDE)
CUSTOMER STANDARD PRODUCT

| | |
|---|---|
| CUSTOMER | WASHINGTON STATE DOT |
| DRAWING NUMBER | 010-X803410-004 |
| SHEET | 1 of 1 |
| REVISION | C |

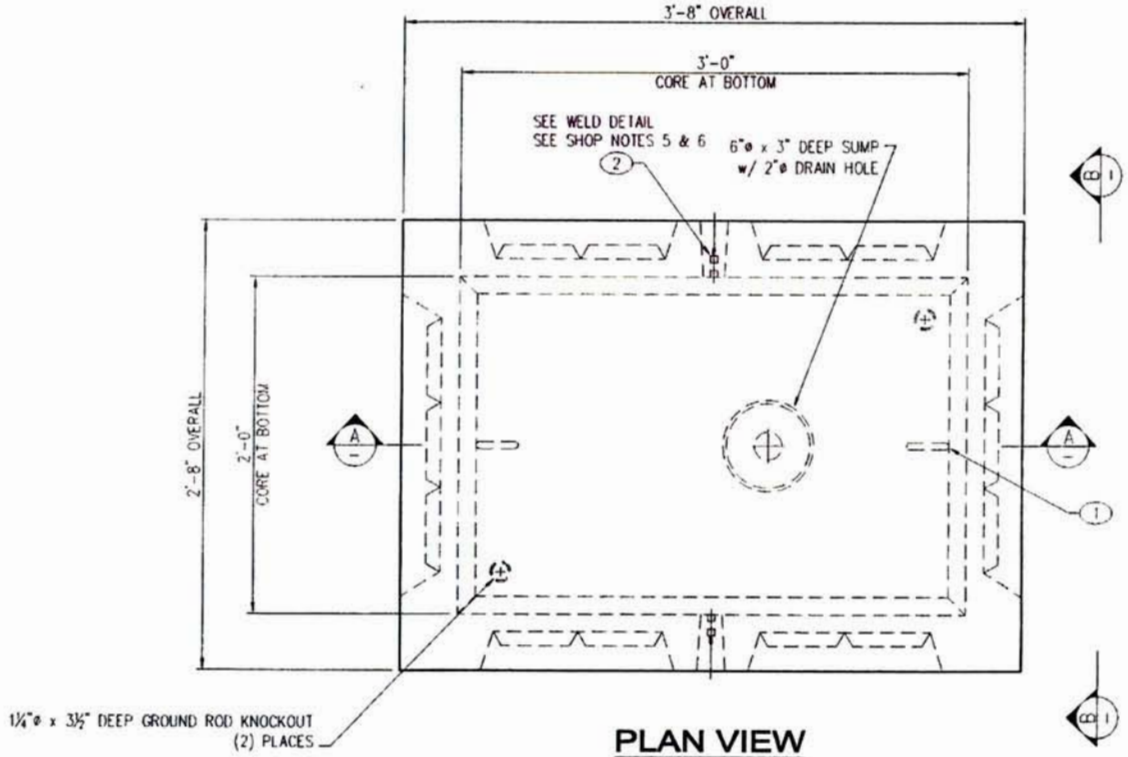


## PLAN VIEW
(SHOWN AS POURED)

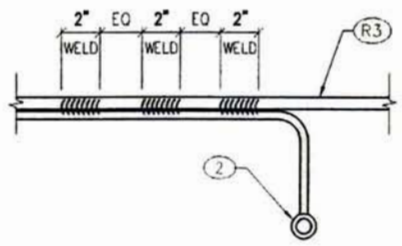


## WELD DETAIL

**SHOP NOTES**

1. USE "233 BASE" STEEL FORM
2. CONCRETE FINISH: FLAT FLOAT FINISH WITH MACHINED EDGES
3. FLIP METHOD: TRUNNION
4. ADD 2" TO BASE SLAB
5. FILL GROUND INSERT WITH GREASE & INSTALL CAP PROTECTOR
6. MARK GROUND INSERTS "BOND" IN 2" LETTERS WITH GREEN PAINT

APPROVED
Washington State
Department of Transportation
HQ Traffic Operations Office
DATE July 30, 2012 TAT

**BILL OF MATERIAL**

| PART | QTY | U/M | DESCRIPTION | ITEM # |
|---|---|---|---|---|
| 1 | 2 | ea | 1/2" Pulling Iron - Galv | 010-5180140-001 |
| 2 | 2 | ea | 1/4" Ground w/ 3/16"x16" Rod- Brass | 010-5100393-000 |
| | 4.00 | ft | Strut 1 5/8"x13/16"-304SS (not stock) | 010-5110060-000 |
| | 0.45 | cu-yd | Concrete Mix - SCC | 010-5010000-000 |
| | 0.73 | bar | Rebar #3 X 40' GR60 | 010-5510010-000 |
| | 0.17 | bar | Rebar #4 X 40' GR60 | 010-5510030-000 |
| | 0.18 | bar | Rebar #5 X 40' GR60 | 010-5510050-000 |
| | 55.33 | sq-ft | Mesh - (Square Feet) | 010-5500000-000 |

**LAYOUT CUT LIST**

| PART | QTY | DESCRIPTION | SIZE |
|---|---|---|---|
| 3 | 2 | Strut 1 5/8" x 13/16" - 304 SS | 2'-0" |

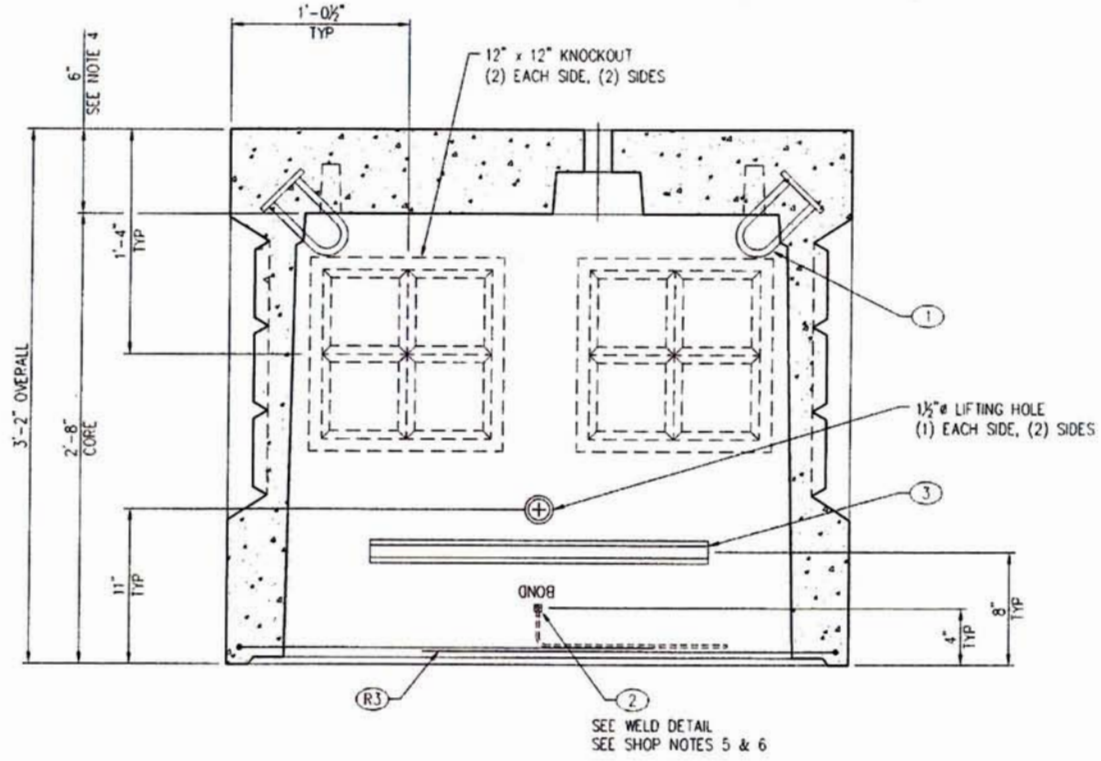


## SECTION AA

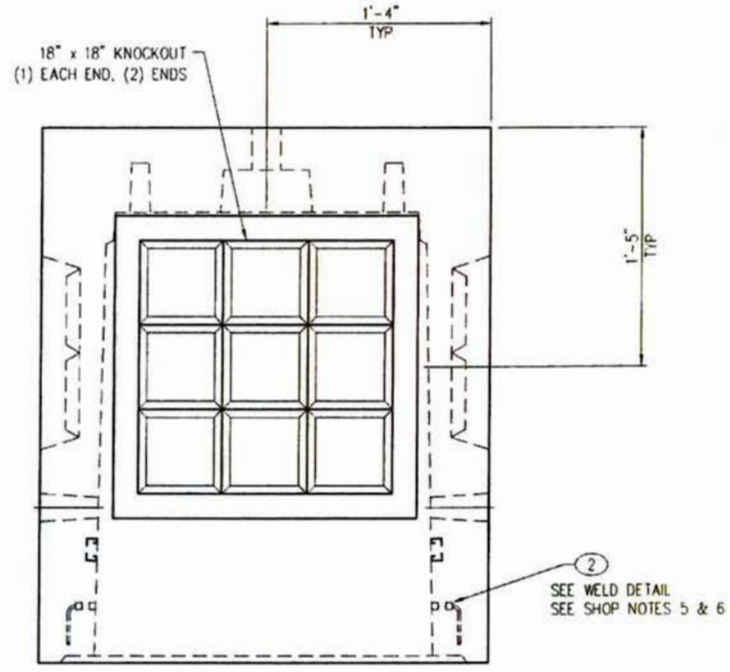


## VIEW BB

STEVEN C. HIESTER
STATE OF WASHINGTON
21830
REGISTERED
PROFESSIONAL ENGINEER
7/23/12

| LTR. | REVISION | DATE | BY |
|---|---|---|---|
| C | CHANGED DRAWING NUMBER | 8/15/11 | MLF |
| - | (SEE CAD FILE FOR COMPLETE REVISION HISTORY) | - | - |

THIS DOCUMENT IS THE PROPERTY OF OLDCASTLE PRECAST, INC. IT IS SUBMITTED FOR REFERENCE PURPOSES ONLY AND SHALL NOT BE USED IN ANY WAY INJURIOUS TO THE INTERESTS OF SAID COMPANY. COPYRIGHT © 2010 Oldcastle Precast, Inc. All Rights Reserved

| | | | |
|---|---|---|---|
| SALES | | DATE | 3/20/09 |
| DESIGNER | WS/JG | WEIGHT | 1,785 lbs |
| CHECKED | BPJ/MLF | CALC NO | |

Oldcastle Precast
P.O. BOX 888 AUBURN, WA 98071-0888
PHONE: 800-952-1638 FAX: 253-735-0201

233 PULLBOX BASE - WSDOT
LAYOUT DETAILS
CUSTOMER STANDARD PRODUCT

CUSTOMER: WASHINGTON STATE D.O.T.
SHEET: 1 of 2
DRAWING NUMBER: 010-0020407-001
REVISION: C

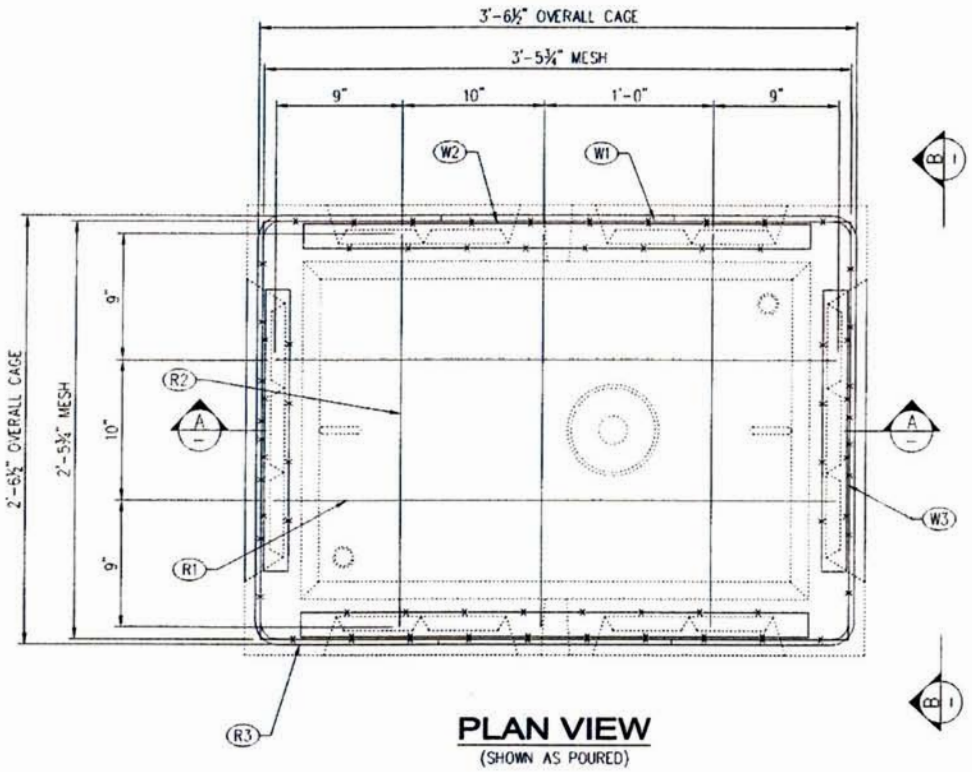


**PLAN VIEW**
(SHOWN AS POURED)

APPROVED
Washington State
Department of Transportation
HQ Traffic Operations Office
DATE July 30, 2012 TAT

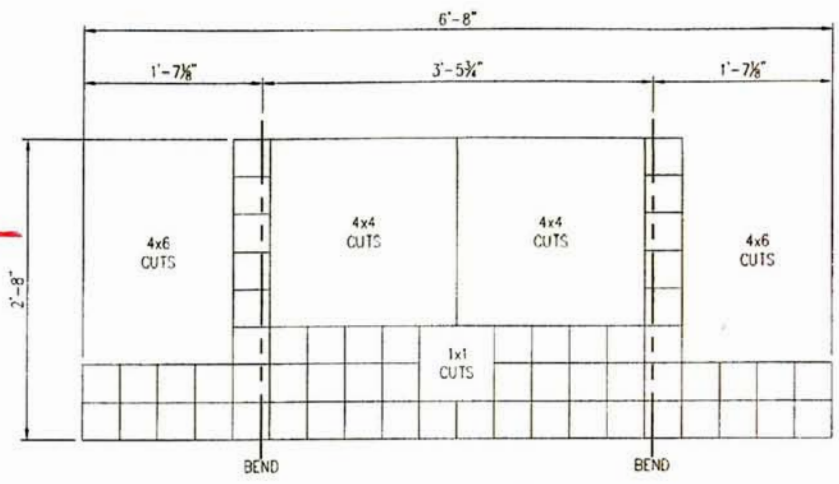


**W1 DETAIL**

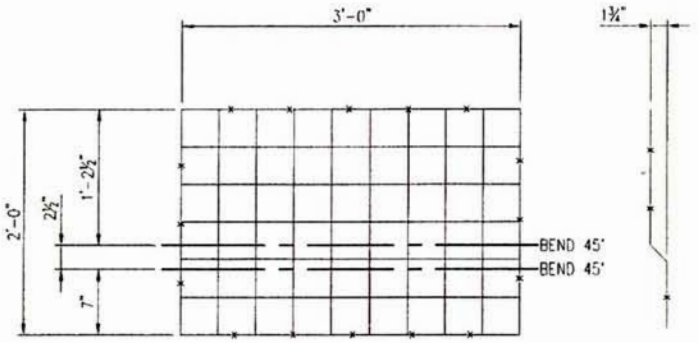


**W2 DETAIL**

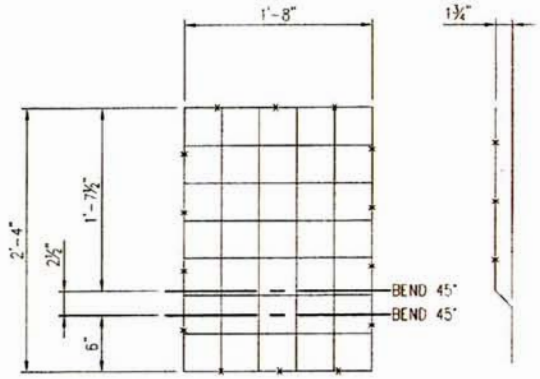


**W3 DETAIL**

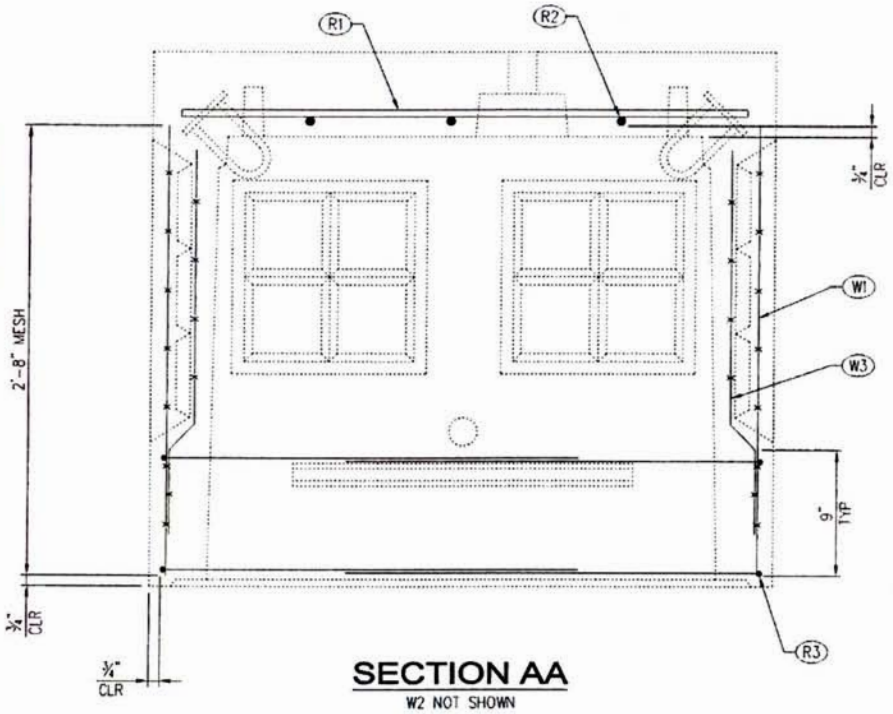


**SECTION AA**
W2 NOT SHOWN

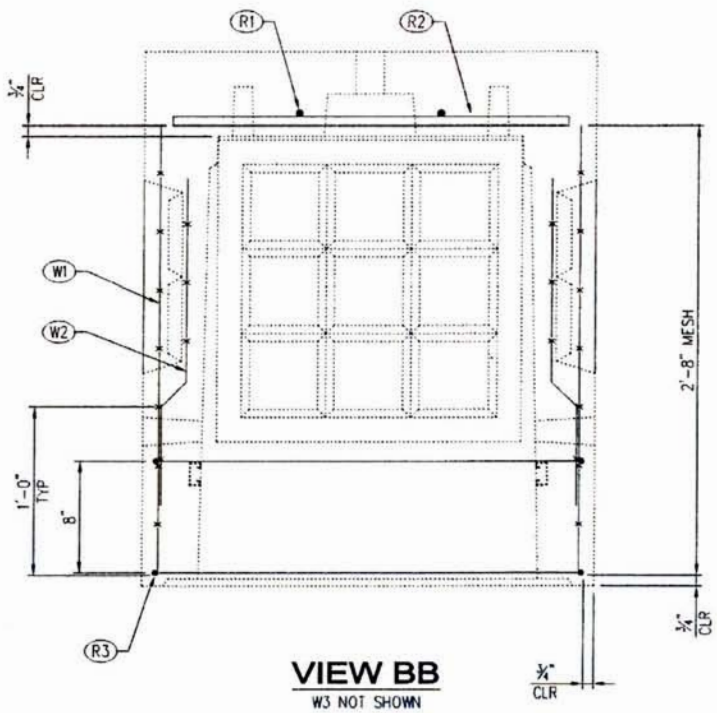


**VIEW BB**
W3 NOT SHOWN

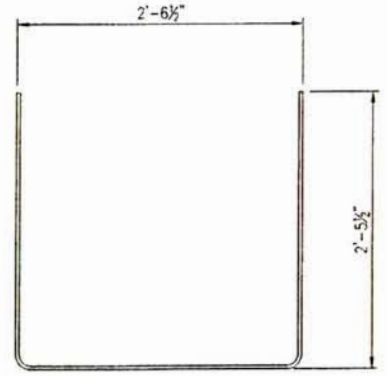


**R3 DETAIL**

| REINFORCING CUT LIST | | | | | |
|---|---|---|---|---|---|
| PART | QTY | DESCRIPTION | FT | IN | SHAPE |
| R1 | 2 | #4 Rebar | 3 | 4 | STR |
| R2 | 3 | #5 Rebar | 2 | 4 | STR |
| R3 | 4 | #3 Rebar | 7 | 3 | BENT |
| W1 | 2 | Mesh 4x4 – W2.9 x W2.9 | | | BENT |
| W2 | 2 | Mesh 4x4 – W2.9 x W2.9 | | | BENT |
| W3 | 2 | Mesh 4x4 – W2.9 x W2.9 | | | BENT |

| LTR. | REVISION | DATE | BY |
|---|---|---|---|
| C | CHANGED DRAWING NUMBER | 8/15/11 | MLF |
| – | (SEE CAD FILE FOR COMPLETE REVISION HISTORY) | – | – |

THIS DOCUMENT IS THE PROPERTY OF OLDCASTLE PRECAST, INC. IT IS SUBMITTED FOR REFERENCE PURPOSES ONLY AND SHALL NOT BE USED IN ANY WAY INJURIOUS TO THE INTERESTS OF SAID COMPANY. COPYRIGHT © 2010 Oldcastle Precast, Inc. All Rights Reserved

| | | | |
|---|---|---|---|
| SALES | | DATE 3/20/09 | |
| DESIGNER WS/JG | | WEIGHT | |
| CHECKED BPJ/MLF | | CALC NO | |

Oldcastle Precast®
P.O. BOX 888 AUBURN, WA 98071-0888
PHONE: 800-950-1838 FAX: 253-736-4201

233 PULLBOX BASE – WSDOT
REINFORCING DETAILS
CUSTOMER STANDARD PRODUCT

CUSTOMER: WASHINGTON STATE D.O.T.
DRAWING NUMBER: 010–0020407–001
SHEET: 2 of 2
REVISION: C

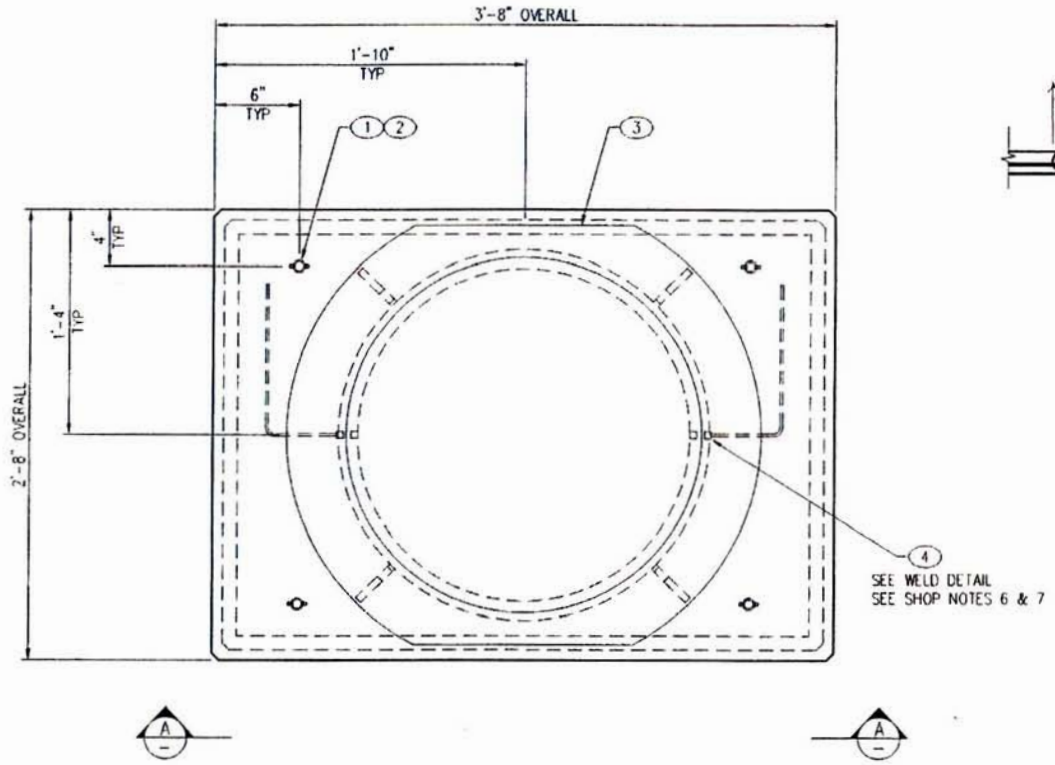


## PLAN VIEW
LAYOUT (SHOWN AS POURED)

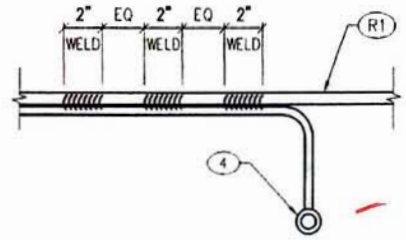


## WELD DETAIL

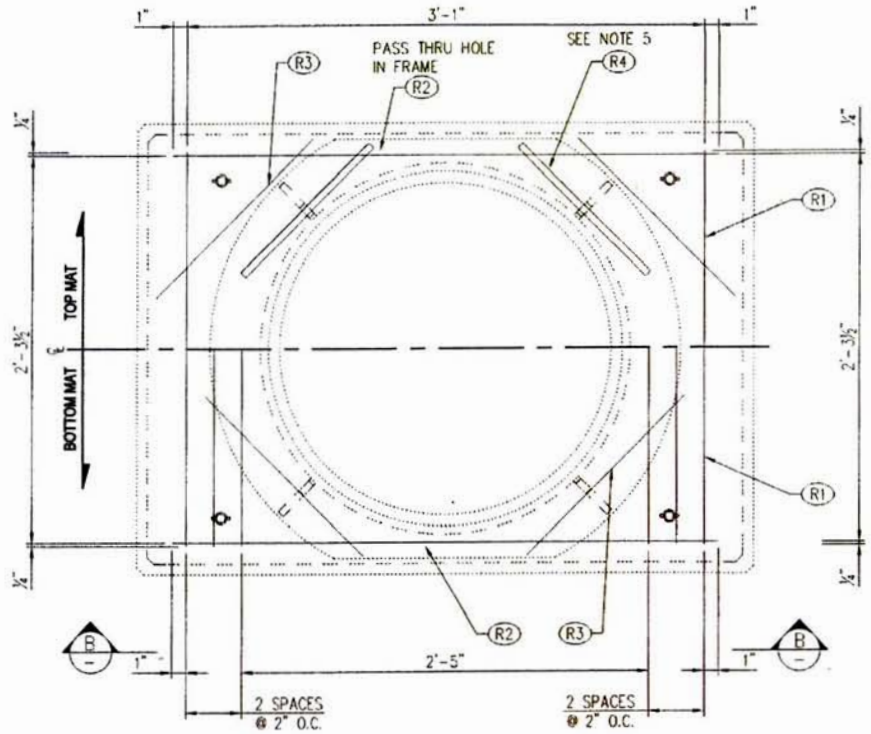


## PLAN VIEW
REINFORCING (SHOWN AS POURED)

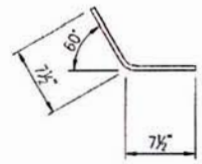


## R4 DETAIL
SEE NOTE 5

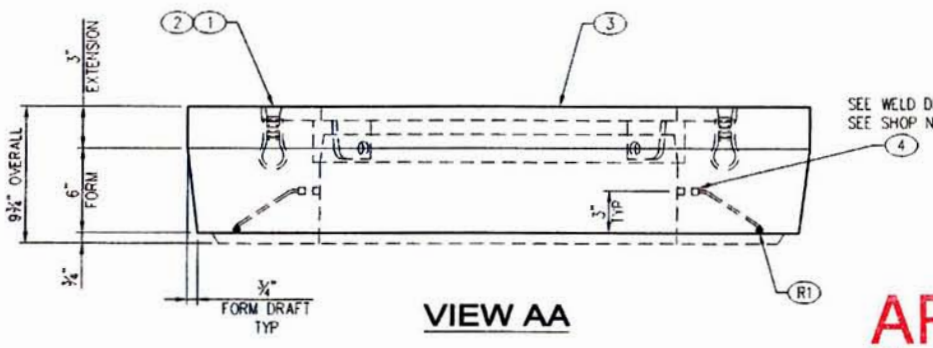


## VIEW AA

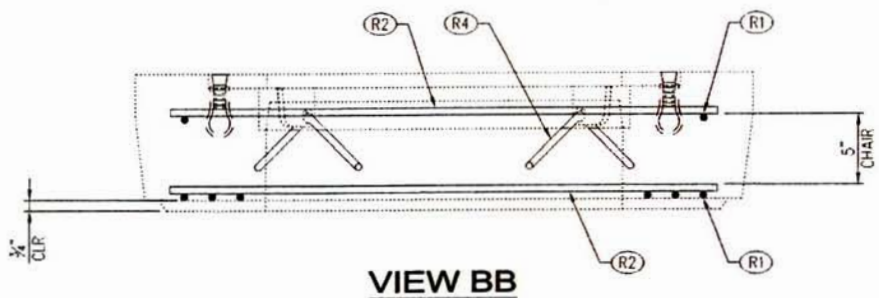


## VIEW BB
R3 NOT SHOWN

APPROVED
Washington State
Department of Transportation
HQ Traffic Operations Office
DATE July 30, 2012 TAT

### BILL OF MATERIAL

| PART | QTY | U/M | DESCRIPTION | ITEM # |
|---|---|---|---|---|
| 1 | 4 | ea | Insert Loop Ferr 3/4" | 010-5100100-000 |
| 2 | 4 | ea | Insert Plastic Plug 3/4" 'UV' | 010-5100050-000 |
| 3 | 1 | ea | 24" x 4" Flng Up - "WSDOT ITS" | 010-4030000-001 |
| 4 | 2 | ea | 1/4" Ground w/ 3/16"x16" Rod- Brass | 010-5100393-000 |
| | 0.18 | cu-yd | Concrete Mix - SCC | 010-5010000-000 |
| | 1.25 | bar | Rebar #4 X 40' GR60 | 010-5510030-000 |
| | 25 | | Wood & Steel Forming Charge | 010-9300050-000 |

### SHOP NOTES

1. USE "23 COVER" STEEL FORM
2. CONCRETE FINISH: BROOM FINISH WITH MACHINED EDGES
3. ADD 3" TO SLAB
4. EAST JORDAN IRON WORKS (EJIW) #00371101 TAPPED FOR GROUNDING
5. PLACE THROUGH HOLE IN FRAME EAR AND TIE TO (R1) OR (R2)
6. FILL GROUND INSERT WITH GREASE & INSTALL CAP PROTECTOR
7. MARK GROUND INSERTS "BOND" IN 2" LETTERS WITH GREEN PAINT

### REINFORCING CUT LIST

| PART | QTY | DESCRIPTION | FT | IN | SHAPE |
|---|---|---|---|---|---|
| R1 | 8 | #4 Rebar | 2 | 4 | STR |
| R2 | 4 | #4 Rebar | 3 | 3 | STR |
| R3 | 8 | #4 Rebar | 1 | 4 | STR |
| R4 | 4 | #4 Rebar | 1 | 9 | BENT |

| LTR. | REVISION | DATE | BY |
|---|---|---|---|
| D | R4 LEGS WERE 10 1/2" LONG | 9/8/11 | WS |
| - | (SEE CAD FILE FOR COMPLETE REVISION HISTORY) | - | - |

THIS DOCUMENT IS THE PROPERTY OF OLDCASTLE PRECAST, INC. IT IS SUBMITTED FOR REFERENCE PURPOSES ONLY AND SHALL NOT BE USED IN ANY WAY INJURIOUS TO THE INTERESTS OF SAID COMPANY. COPYRIGHT © 2011 Oldcastle Precast, Inc. All Rights Reserved

| | | | |
|---|---|---|---|
| SALES | | DATE | 4/6/10 |
| DESIGNER | JG | WEIGHT | 875 lbs |
| CHECKED | | CALC NO | |

Oldcastle Precast®
P.O. BOX 580 AUBURN, WA 98071-0580
PHONE: 800-882-1538 FAX: 253-735-4201

23-24F HD COVER - WSDOT
LAYOUT & REINFORCING DETAILS
CUSTOMER STANDARD PRODUCT

| CUSTOMER | SHEET |
|---|---|
| WASHINGTON STATE D.O.T. | 1 OF 1 |
| DRAWING NUMBER | REVISION |
| 010-0020435-001 | D |

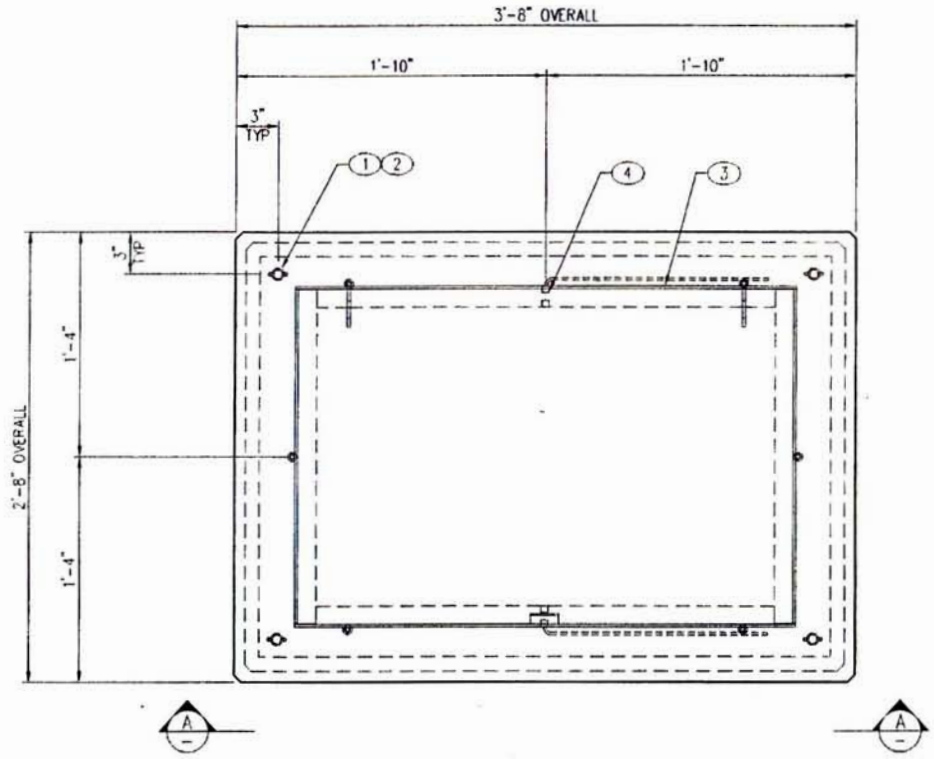


## PLAN VIEW
LAYOUT (SHOWN AS POURED)

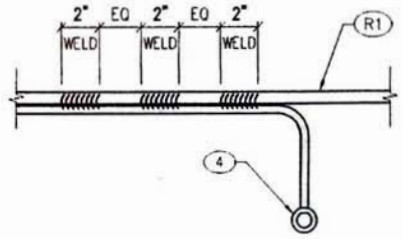


## WELD DETAIL

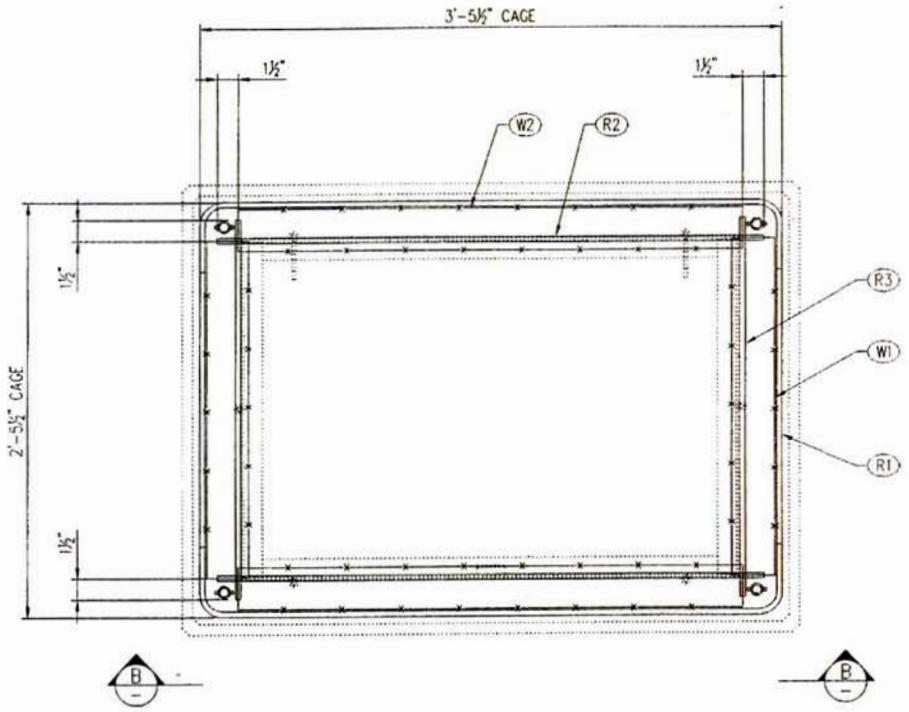


## PLAN VIEW
REINFORCING (SHOWN AS POURED)

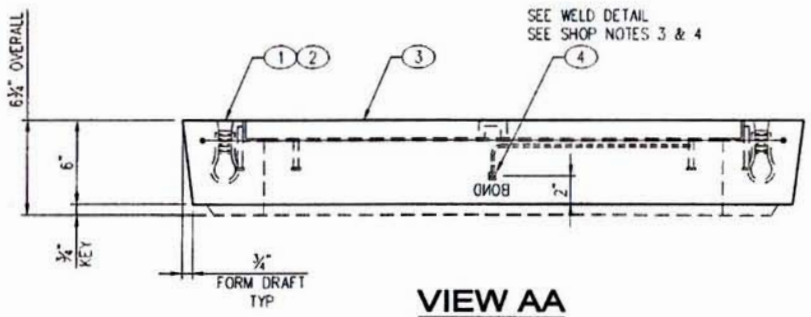


## VIEW AA

APPROVED
Washington State
Department of Transportation
HQ Traffic Operations Office
DATE July 30, 2012 TAT

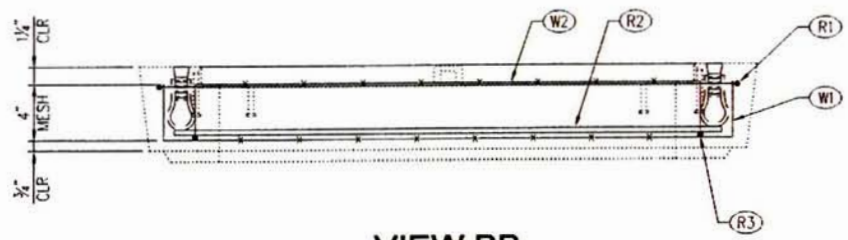


## VIEW BB

**SHOP NOTES**

1. USE "23 TOP" STEEL FORM
2. CONCRETE FINISH: BROOM FINISH WITH MACHINED EDGES
3. FILL GROUND INSERT WITH GREASE & INSTALL CAP PROTECTOR
4. MARK GROUND INSERTS "BOND" IN 2" LETTERS WITH GREEN PAINT

| BILL OF MATERIAL | | | | |
|---|---|---|---|---|
| PART | QTY | U/M | DESCRIPTION | ITEM # |
| 1 | 4 | ea | Insert Loop Ferr 3/4" | 010-5100100-000 |
| 2 | 4 | ea | Insert Plastic Plug 3/4" 'UV' | 010-5100050-000 |
| 3 | 1 | ea | 2436-NSA Frame | 010-2130020-001 |
| 4 | 2 | ea | 1/4" Ground w/ 3/16"x16" Rod- Brass | 010-5100393-000 |
| | 0.09 | cu-yd | Concrete Mix - SCC | 010-5010000-000 |
| | 0.63 | bar | Rebar #3 X 40' GR60 | 010-5510010-000 |
| | 5.83 | sq-ft | Mesh - (Square Feet) | 010-5500000-000 |

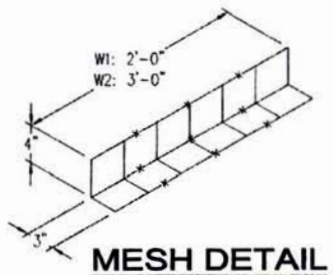


## MESH DETAIL

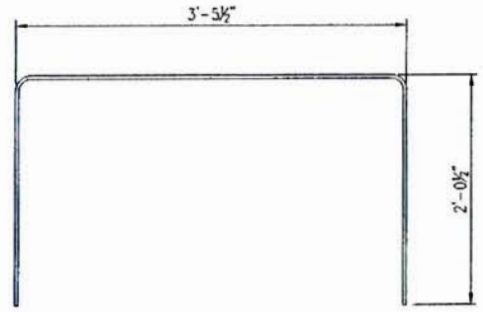


## R1 DETAIL

| REINFORCING CUT LIST | | | | | |
|---|---|---|---|---|---|
| PART | QTY | DESCRIPTION | FT | IN | SHAPE |
| R1 | 2 | #3 Rebar | 7 | 4 | BENT |
| R2 | 2 | #3 Rebar | 3 | 3 | STR |
| R3 | 2 | #3 Rebar | 2 | 3 | STR |
| W1 | 2 | Mesh 4x4 - W2.9 x W2.9 | | | BENT |
| W2 | 2 | Mesh 4x4 - W2.9 x W2.9 | | | BENT |

STEVEN C. HESTER
STATE OF WASHINGTON
21830
REGISTERED
PROFESSIONAL ENGINEER
7/23/12

| LTR | REVISION | DATE | BY |
|---|---|---|---|
| E | CHANGED BOM ITEM 3 | 9/8/11 | CDR |
| - | (SEE CAD FILE FOR COMPLETE REVISION HISTORY) | - | - |

THIS DOCUMENT IS THE PROPERTY OF OLDCASTLE PRECAST, INC. IT IS SUBMITTED FOR REFERENCE PURPOSES ONLY AND SHALL NOT BE USED IN ANY WAY INJURIOUS TO THE INTERESTS OF SAID COMPANY. COPYRIGHT © 2011 Oldcastle Precast, Inc. All Rights Reserved

| | | | |
|---|---|---|---|
| SALES | | DATE | 4/2/10 |
| DESIGNER | JG | WEIGHT | 410 lbs |
| CHECKED | | CALC NO | |

Oldcastle Precast®
P.O. BOX 888 AUBURN, WA 98071-0888
PHONE: 800-800-1888 FAX: 253-736-0201

23-2436F COVER - WSDOT
LAYOUT & REINFORCING DETAILS
CUSTOMER STANDARD PRODUCT

CUSTOMER: WASHINGTON STATE D.O.T.
DRAWING NUMBER: 010-0020422-001
SHEET: 1 of 1
REVISION: E

**NOTE:**
PENTA HEAD BOLT IS RECESSED MINIMUM ⅛" BELOW PLATE SURFACE.

PENTA HEAD BOLT TO BE LIBERALLY COATED WITH ANTI-SEIZE COMPOUND.

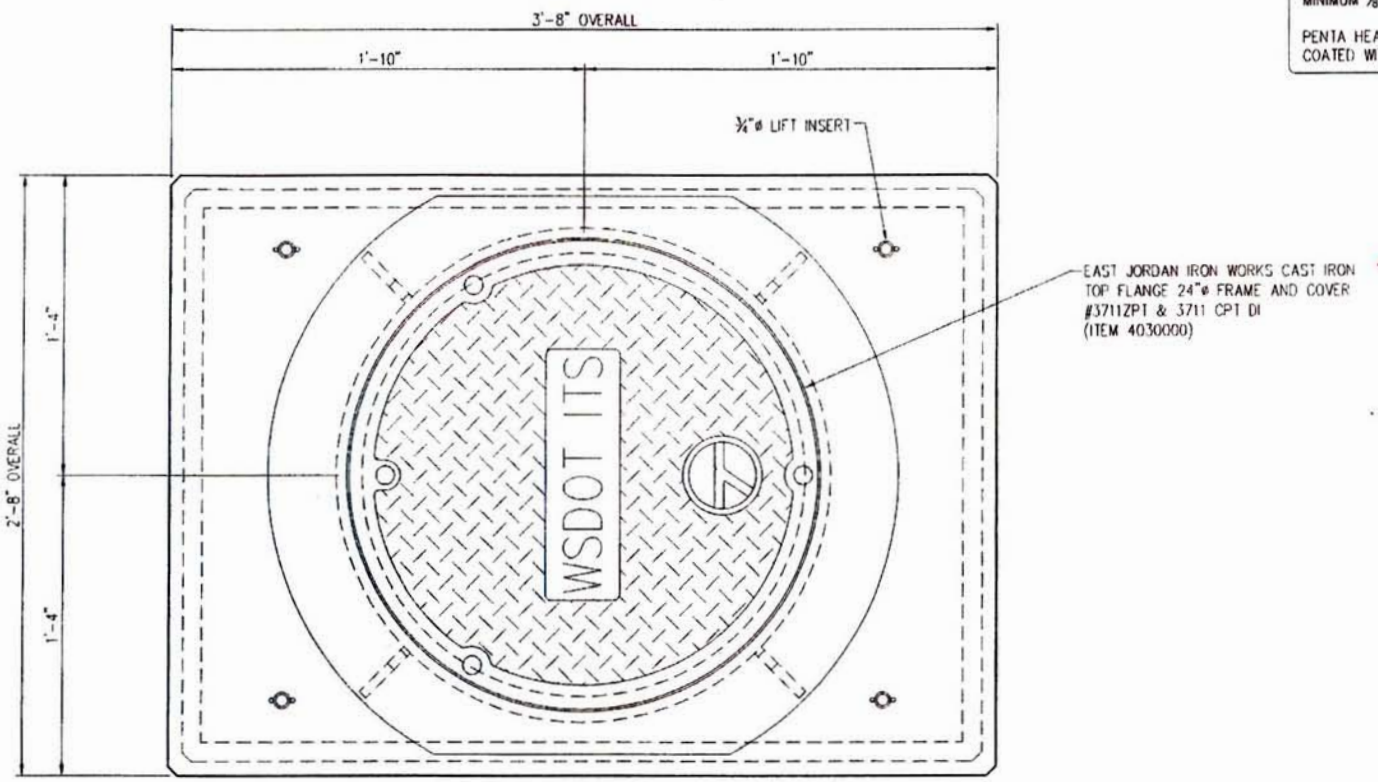


## PLAN VIEW

### STRUCTURAL NOTES

1. CONCRETE: 28 DAY COMPRESSIVE STRENGTH f'c = 4,000 psi
2. REBAR: ASTM A-615 GRADE 60
3. MESH: ASTM A-185 GRADE 65
4. DESIGN: ACI-318-05 BUILDING CODE
5. LOADS: WHEEL LOAD = 46,000 lbs
   ASTM C-857 "MINIMUM STRUCTURAL DESIGN LOADING FOR UNDERGROUND PRECAST CONCRETE UTILITY STRUCTURES"
   30% IMPACT FOR LESS THAN 2'-0" SOIL COVER
   TOP OF VAULT AT FINISHED GRADE

### GENERAL NOTES

1. CUSTOMER TO:
   VERIFY ALL FEATURES
   DO ALL GROUTING & EPOXY OF VAULTS, HOLES & SEAMS (USING NON-SHRINK GROUT)
   SUPPLY & INSTALL ALL PIPING & ELECTRICAL
   INSTALL ALL LADDERS
   DO ALL PAINTING

### NOTE

USE THIS COVER TO CONVERT AN EXISTING STANDARD DUTY PULL BOX INTO A HEAVY DUTY PULL BOX.

APPROVED
Washington State
Department of Transportation
HQ Traffic Operations Office
DATE July 30, 2012 TAT

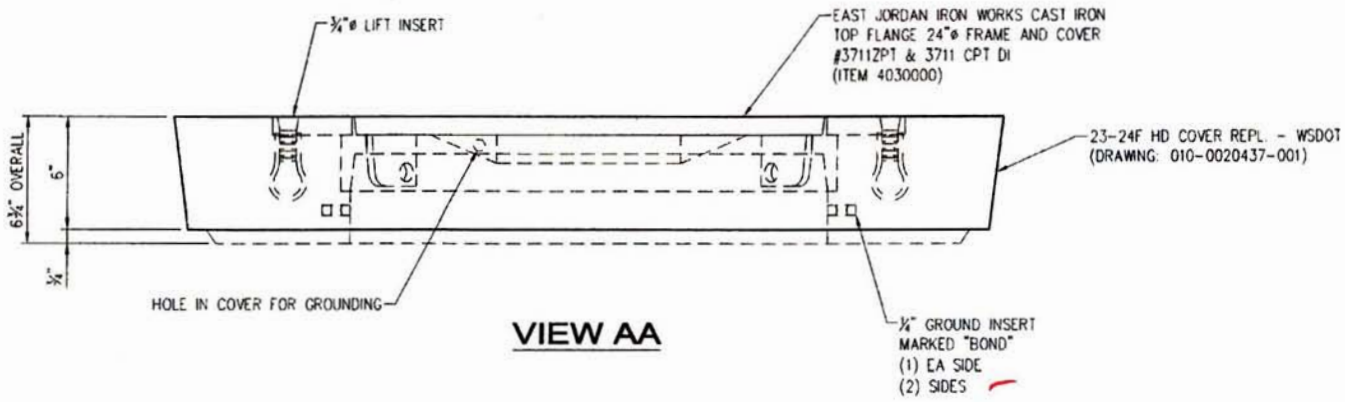


## VIEW AA

STEVEN C. HIESTER
STATE OF WASHINGTON
21830
REGISTERED PROFESSIONAL ENGINEER
7/23/12

| LTR. | REVISION | DATE | BY |
|---|---|---|---|
| D | REMOVED SHEET 2 | 8/15/11 | MLF |
| - | (SEE CAD FILE FOR COMPLETE REVISION HISTORY) | - | - |

THIS DOCUMENT IS THE PROPERTY OF OLDCASTLE PRECAST, INC. IT IS SUBMITTED FOR REFERENCE PURPOSES ONLY AND SHALL NOT BE USED IN ANY WAY INJURIOUS TO THE INTERESTS OF SAID COMPANY. COPYRIGHT © 2011 Oldcastle Precast, Inc. All Rights Reserved

| | | | |
|---|---|---|---|
| SALES | | DATE | 4/11/10 |
| DESIGNER | JG | WEIGHT | 740 lbs |
| CHECKED | | CALC NO | |

Oldcastle Precast®

23-24F HEAVY DUTY REPL. COVER - WSDOT

CUSTOMER STANDARD PRODUCT

| | |
|---|---|
| CUSTOMER | WASHINGTON STATE D.O.T. |
| DRAWING NUMBER | 010-X803404-001 |
| SHEET | 1 of 1 |
| REVISION | D |

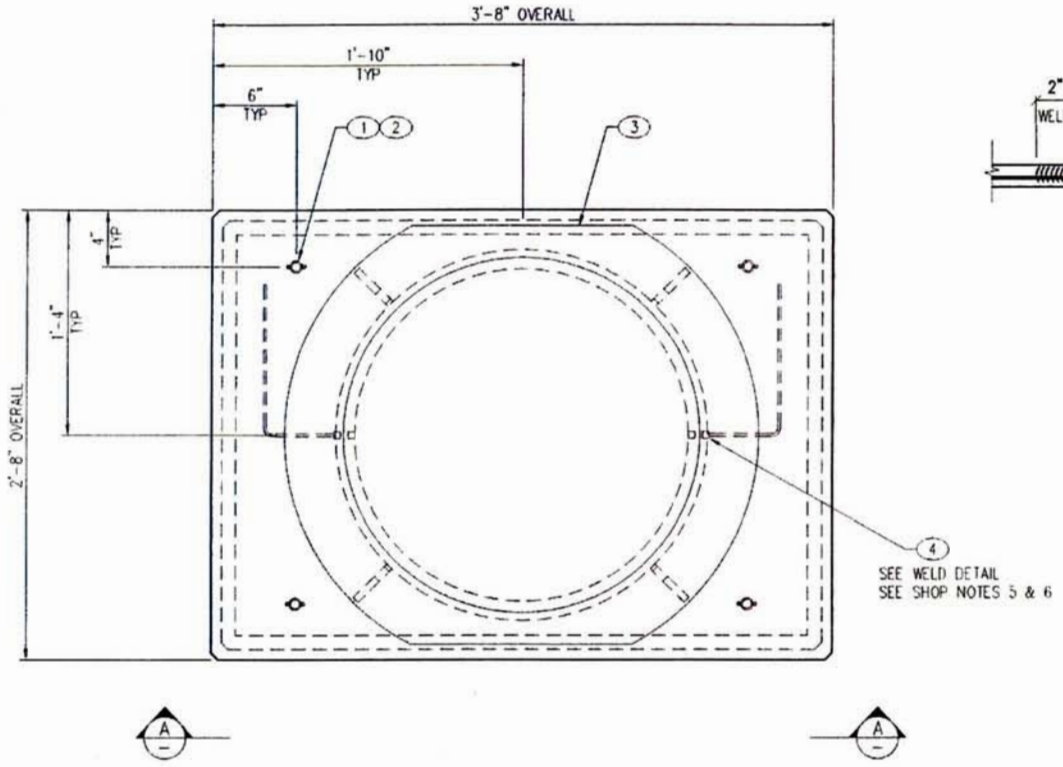


## PLAN VIEW
LAYOUT (SHOWN AS POURED)

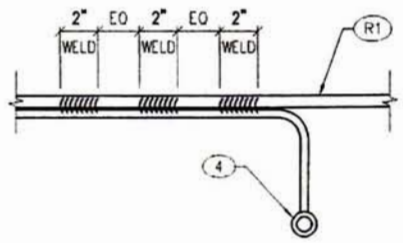


## WELD DETAIL

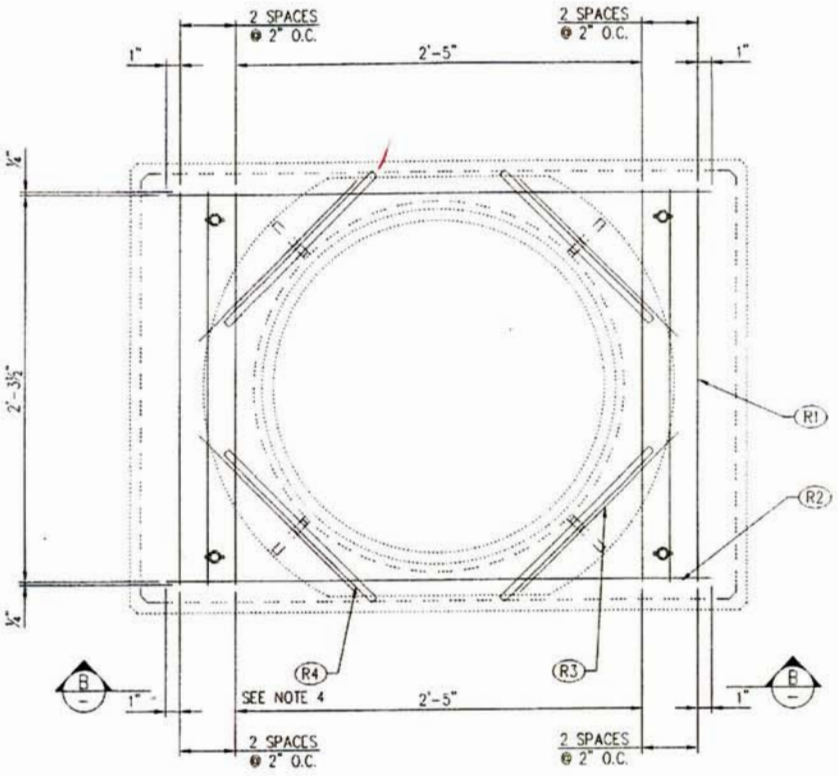


## PLAN VIEW
REINFORCING (SHOWN AS POURED)

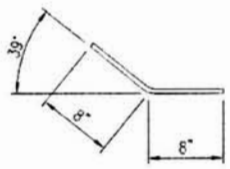


## R4 DETAIL
SEE NOTE 4

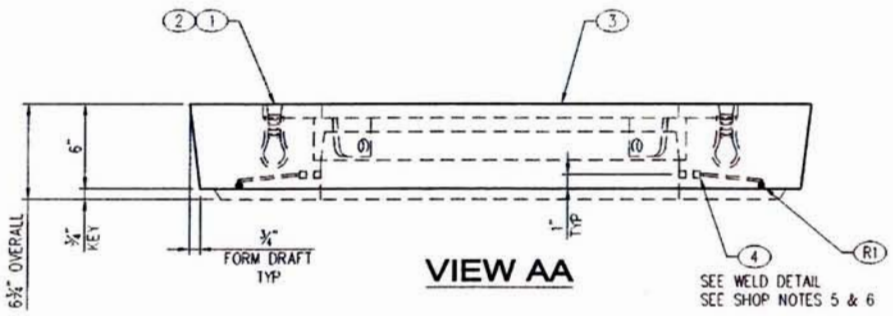


## VIEW AA

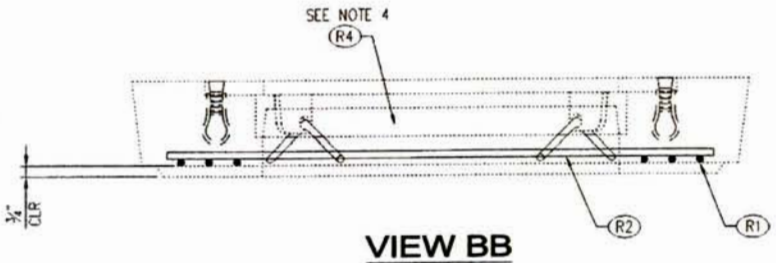


## VIEW BB
R3 NOT SHOWN

APPROVED
Washington State
Department of Transportation
HQ Traffic Operations Office
DATE July 30, 2012 TAT

### BILL OF MATERIAL

| PART | QTY | U/M | DESCRIPTION | ITEM # |
|---|---|---|---|---|
| 1 | 4 | ea | Insert Loop Ferr 3/4" | 010-5100100-000 |
| 2 | 4 | ea | Insert Plastic Plug 3/4" 'UV' | 010-5100050-000 |
| 3 | 1 | ea | 24" x 4" Fing Up - "WSDOT ITS" | 010-4030000-001 |
| 4 | 2 | ea | 1/4" Ground w/ 3/16"x16" Rod- Brass | 010-5100393-000 |
| | 0.13 | cu-yd | Concrete Mix - SCC | 010-5010000-000 |
| | 1.01 | bar | Rebar #4 X 40' GR60 | 010-5510030-000 |
| | 25.00 | | Wood & Steel Forming Charge | 010-9300050-000 |

### SHOP NOTES

1. USE "23 COVER" STEEL FORM
2. CONCRETE FINISH: BROOM FINISH WITH MACHINED EDGES
3. EAST JORDAN IRON WORKS (EJW) #00371101 TAPPED FOR GROUNDING
4. PLACE THROUGH HOLE IN FRAME EAR
5. FILL GROUND INSERT WITH GREASE & INSTALL CAP PROTECTOR
6. MARK GROUND INSERTS "BOND" IN 2" LETTERS WITH GREEN PAINT

### REINFORCING CUT LIST

| PART | QTY | DESCRIPTION | FT | IN | SHAPE |
|---|---|---|---|---|---|
| R1 | 6 | #4 Rebar | 2 | 4 | STR |
| R2 | 2 | #4 Rebar | 3 | 3 | STR |
| R3 | 4 | #4 Rebar | 1 | 4 | STR |
| R4 | 4 | #4 Rebar | 1 | 4 | BENT |

STEVEN C. HIESTER
STATE OF WASHINGTON
21830
REGISTERED
PROFESSIONAL ENGINEER
7/23/12

| LTR. | REVISION | DATE | BY |
|---|---|---|---|
| - | (SEE CAD FILE FOR COMPLETE REVISION HISTORY) | - | - |

THIS DOCUMENT IS THE PROPERTY OF OLDCASTLE PRECAST, INC. IT IS SUBMITTED FOR REFERENCE PURPOSES ONLY AND SHALL NOT BE USED IN ANY WAY INJURIOUS TO THE INTERESTS OF SAID COMPANY. COPYRIGHT © 2011 Oldcastle Precast, Inc. All Rights Reserved

| | | | |
|---|---|---|---|
| SALES | | DATE | 8/15/11 |
| DESIGNER | MLF | WEIGHT | 640 lbs |
| CHECKED | | CALC NO | |

Oldcastle Precast
P.O. BOX 808 AUBURN, WA 98071-0808
PHONE: 800-950-1626 FAX: 253-736-0201

23-24F HD COVER REPL. - WSDOT
LAYOUT & REINFORCING DETAILS
CUSTOMER STANDARD PRODUCT

CUSTOMER: WASHINGTON STATE D.O.T.
SHEET: 1 of 1
DRAWING NUMBER: 010-0020437-001
REVISION:

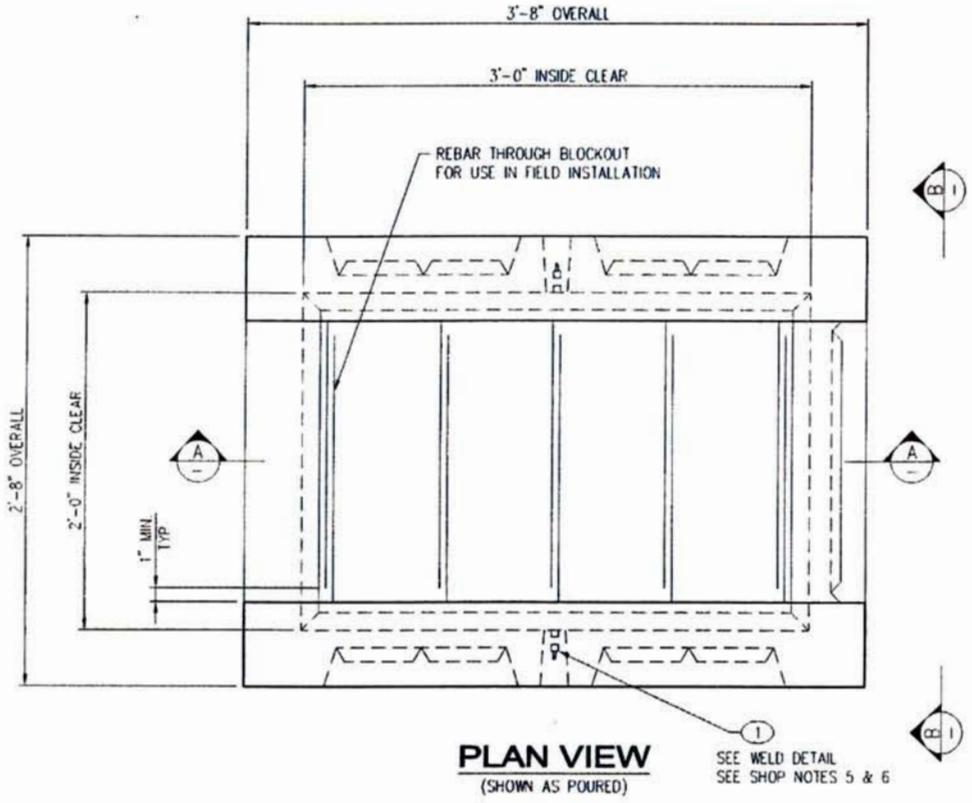


## PLAN VIEW
(SHOWN AS POURED)

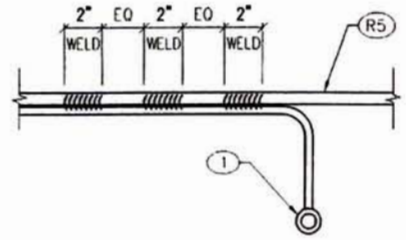


## WELD DETAIL

**SHOP NOTES**

1. USE "233 BASE" STEEL FORM
2. CONCRETE FINISH: FLAT FLOAT FINISH WITH MACHINED EDGES
3. FLIP METHOD: TRUNNION
4. ADD 3" TO BASE SLAB
5. FILL GROUND INSERT WITH GREASE & INSTALL CAP PROTECTOR
6. MARK GROUND INSERTS "BOND" IN 2" LETTERS WITH GREEN PAINT

APPROVED
Washington State
Department of Transportation
HQ Traffic Operations Office
DATE July 30, 2012 TAT

**BILL OF MATERIAL**

| PART | QTY | U/M | DESCRIPTION | ITEM # |
|---|---|---|---|---|
| 1 | 2 | ea | 1/4" Ground w/ 3/16"x16" Rod- Brass | 010-5100393-000 |
| | 0.39 | cu-yd | Concrete Mix - SCC | 010-5010000-000 |
| | 1.85 | bar | Rebar #3 X 40' GR60 | 010-5510010-000 |
| | 35.83 | sq-ft | Mesh - (Square Feet) | 010-5500000-000 |
| | 4.00 | ft | Strut 1 5/8"x13/16" -304 SS (NSTK) | 010-5110060-000 |

**LAYOUT CUT LIST**

| PART | QTY | DESCRIPTION | SIZE |
|---|---|---|---|
| 2 | 2 | Strut 1 5/8"x13/16" - 304 SS | 2'-0" |

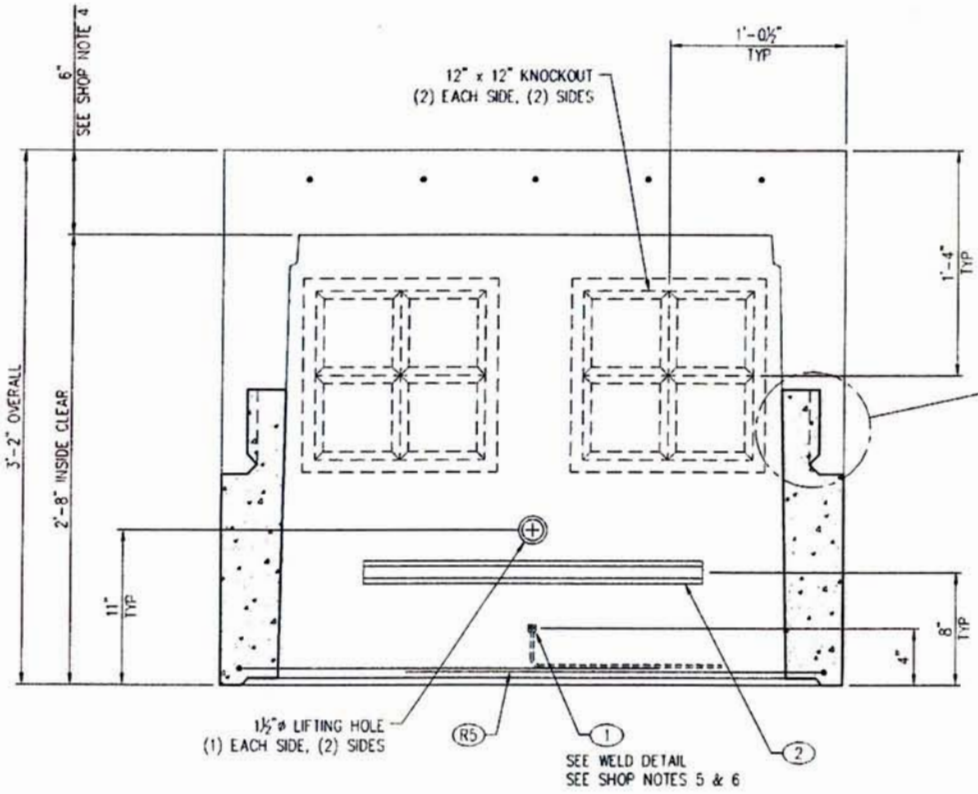


## VIEW AA

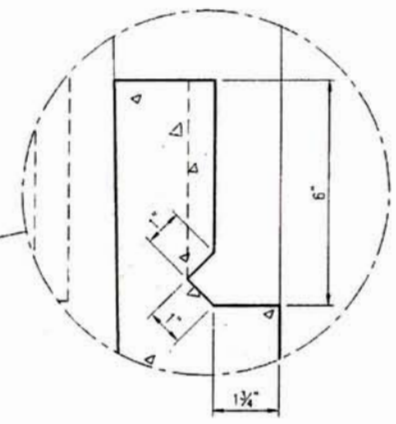


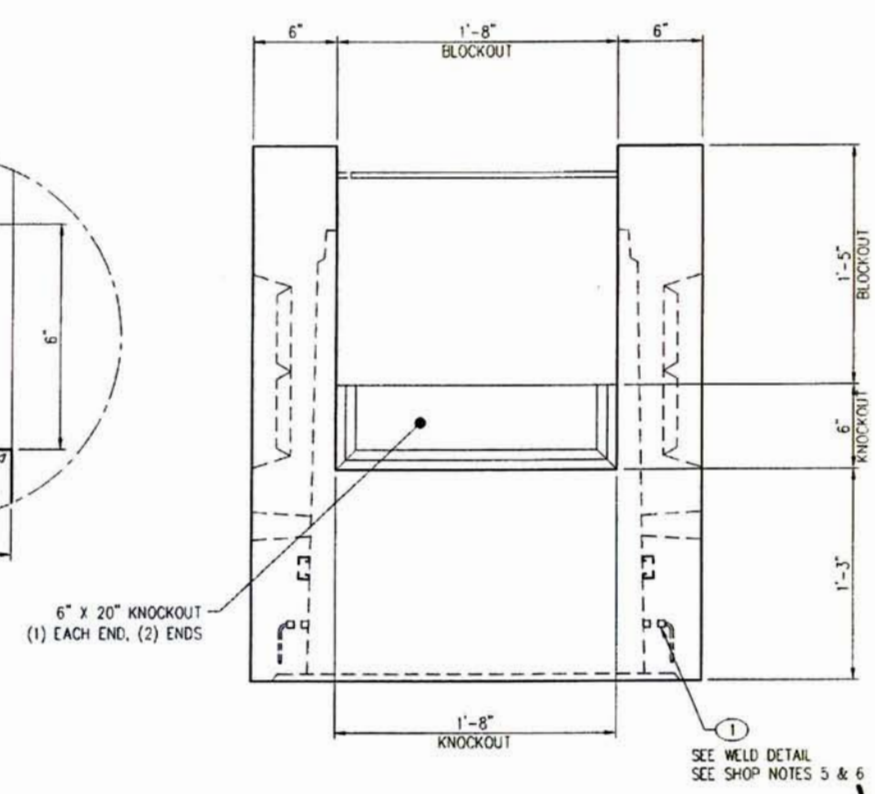


## VIEW BB

STEVEN C. HIESTER
STATE OF WASHINGTON
21830
REGISTERED
PROFESSIONAL ENGINEER
7/23/12

| LTR. | REVISION | DATE | BY |
|---|---|---|---|
| C | CHANGED DRAWING NUMBER | 8/15/11 | MLF |
| - | (SEE CAD FILE FOR COMPLETE REVISION HISTORY) | - | - |

THIS DOCUMENT IS THE PROPERTY OF OLDCASTLE PRECAST, INC. IT IS SUBMITTED FOR REFERENCE PURPOSES ONLY AND SHALL NOT BE USED IN ANY WAY INJURIOUS TO THE INTERESTS OF SAID COMPANY. COPYRIGHT © 2011 Oldcastle Precast, Inc. All Rights Reserved

| | | | |
|---|---|---|---|
| SALES | | DATE | 4/12/10 |
| DESIGNER | JG | WEIGHT | 1,580 lbs |
| CHECKED | | CALC NO | |

Oldcastle Precast®
P.O. BOX 888 AUBURN, WA 98071-0888
PHONE: 800-663-1636 FAX: 253-735-0291

233 SPLIT PULLBOX BASE - WSDOT
LAYOUT DETAILS
CUSTOMER STANDARD PRODUCT

| CUSTOMER | SHEET |
|---|---|
| WASHINGTON STATE D.O.T. | 1 of 2 |
| DRAWING NUMBER | REVISION |
| 010-0020406-001 | C |

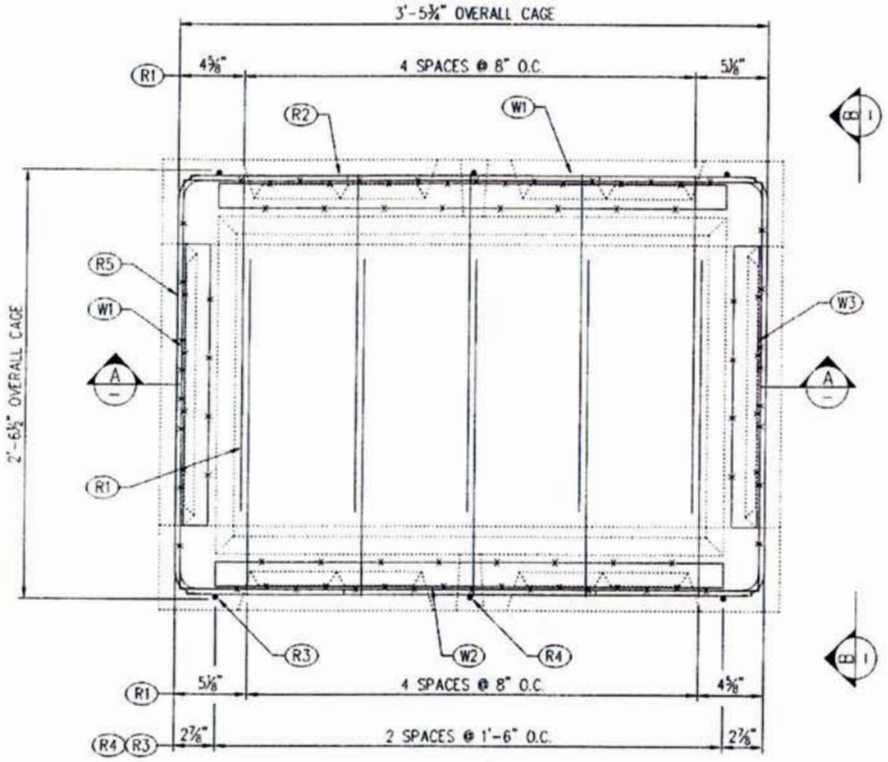


## PLAN VIEW
(SHOWN AS POURED)

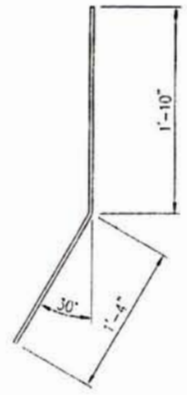


## R4 DETAIL

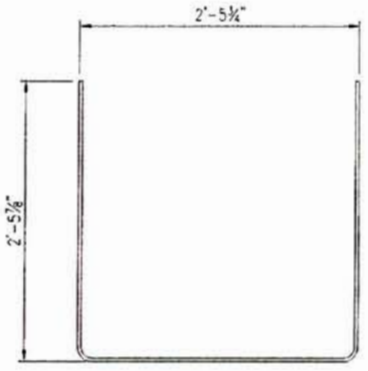


## R5 DETAIL

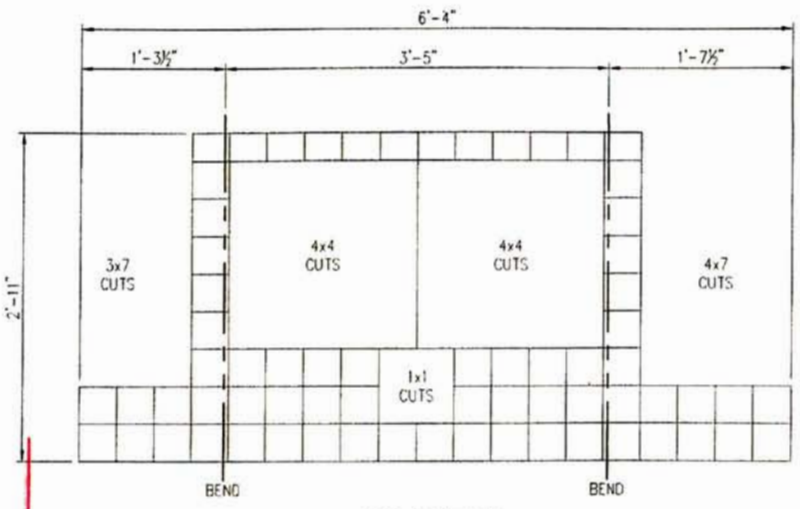


## W1 DETAIL

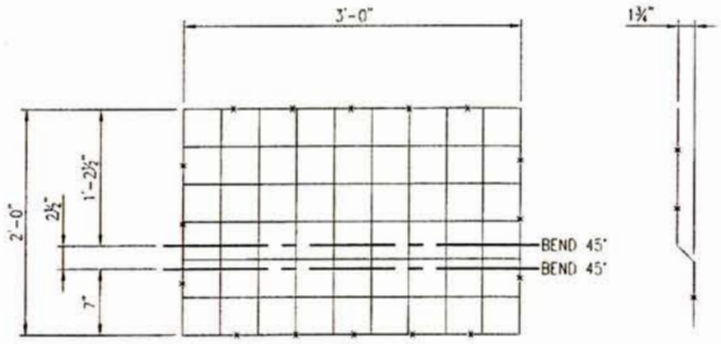


## W2 DETAIL

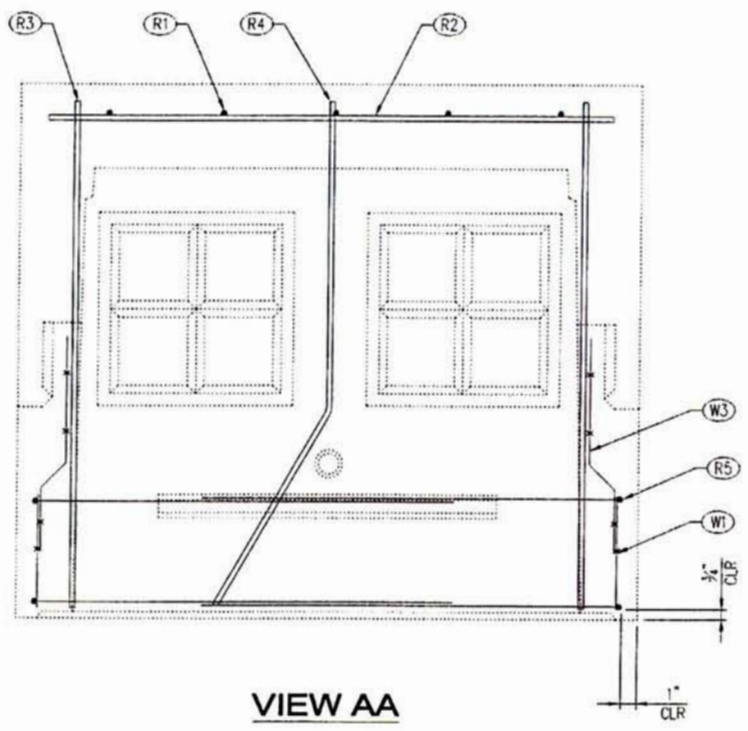


## VIEW AA

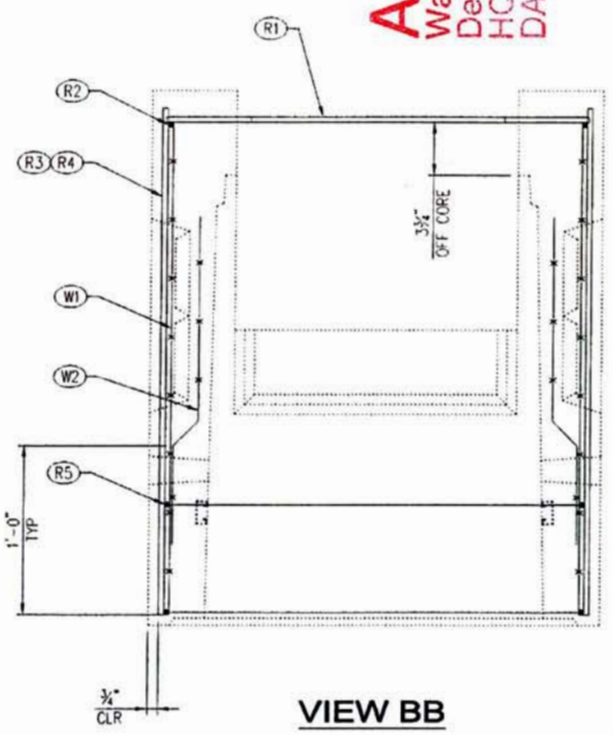


## VIEW BB

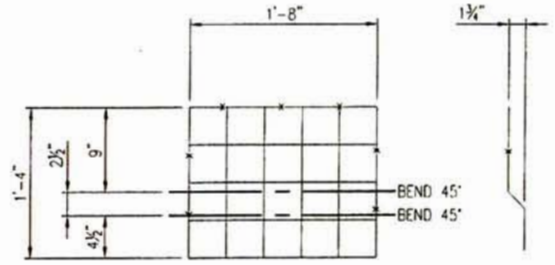


## W3 DETAIL

| REINFORCING CUT LIST | | | | | |
|---|---|---|---|---|---|
| PART | QTY | DESCRIPTION | FT | IN | SHAPE |
| R1 | 10 | #3 Rebar | 2 | 0 | STR |
| R2 | 2 | #3 Rebar | 3 | 4 | STR |
| R3 | 4 | #3 Rebar | 3 | 0 | STR |
| R4 | 2 | #3 Rebar | 3 | 2 | BENT |
| R5 | 4 | #3 Rebar | 7 | 3 | BENT |
| W1 | 2 | Mesh 4x4 – W2.9 x W2.9 | | | BENT |
| W2 | 2 | Mesh 4x4 – W2.9 x W2.9 | | | BENT |
| W3 | 2 | Mesh 4x4 – W2.9 x W2.9 | | | BENT |

APPROVED
Washington State
Department of Transportation
HQ Traffic Operations Office
DATE July 30, 2012 TAT

STEVEN C. HIESTER
STATE OF WASHINGTON
21830
REGISTERED
PROFESSIONAL ENGINEER
9/23/12

| LTR. | REVISION | DATE | BY |
|---|---|---|---|
| C | CHANGED DRAWING NUMBER | 8/15/11 | MLF |
| – | (SEE CAD FILE FOR COMPLETE REVISION HISTORY) | – | – |

THIS DOCUMENT IS THE PROPERTY OF OLDCASTLE PRECAST, INC. IT IS SUBMITTED FOR REFERENCE PURPOSES ONLY AND SHALL NOT BE USED IN ANY WAY DETRIMENTAL TO THE INTERESTS OF SAID COMPANY. COPYRIGHT © 2011 Oldcastle Precast, Inc All Rights Reserved

| | | | |
|---|---|---|---|
| SALES | | DATE 4/12/10 | |
| DESIGNER | JG | WEIGHT | |
| CHECKED | | CALC NO | |

Oldcastle Precast®
P.O. BOX 888 AUBURN, WA 98071-0888
PHONE: 800-562-1638 FAX: 253-736-4201

233 SPLIT PULLBOX BASE – WSDOT
REINFORCING DETAILS
CUSTOMER STANDARD PRODUCT

CUSTOMER: WASHINGTON STATE D.O.T.
DRAWING NUMBER: 010–0020406–001
SHEET: 2 of 2
REVISION: C

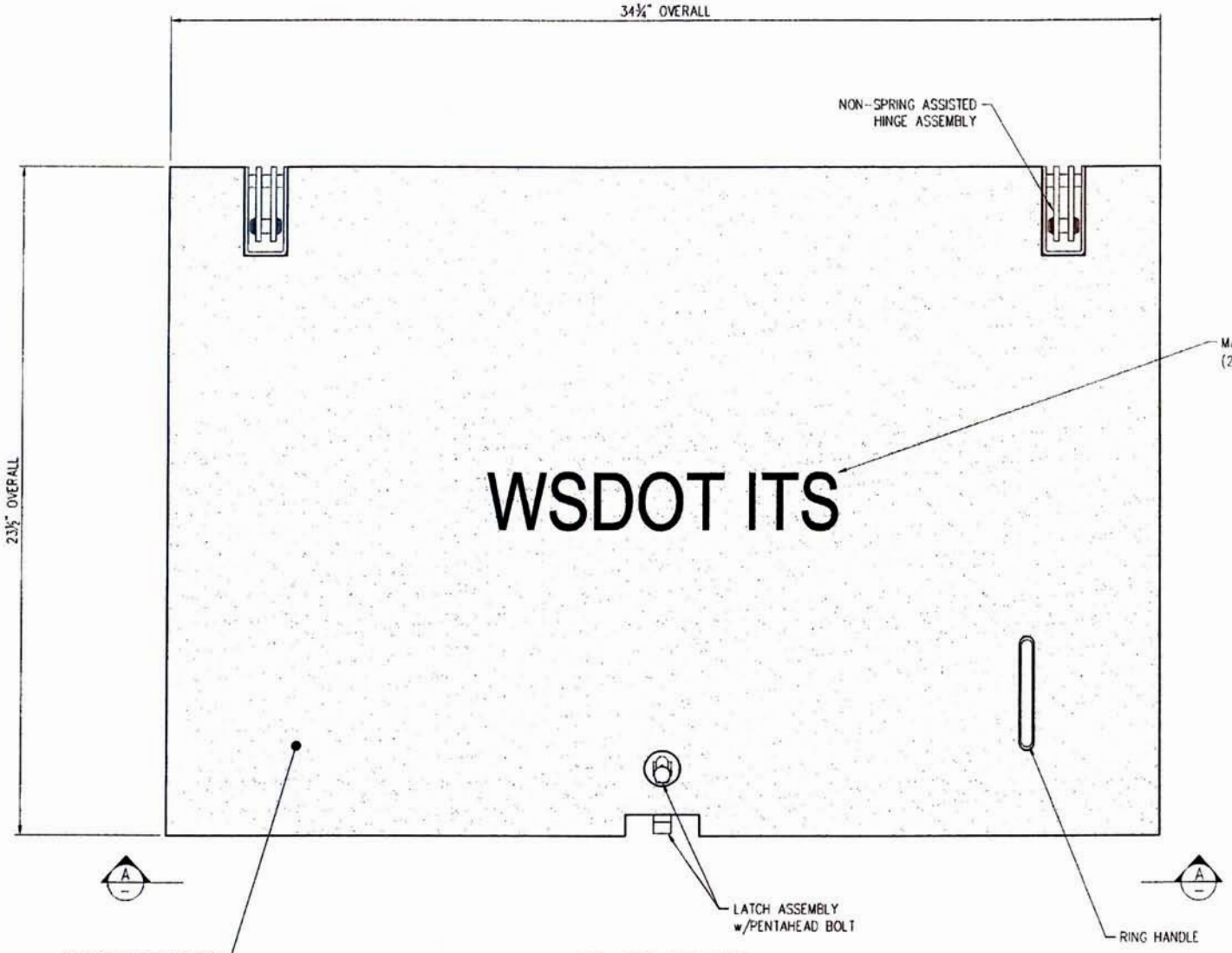


PLAN VIEW

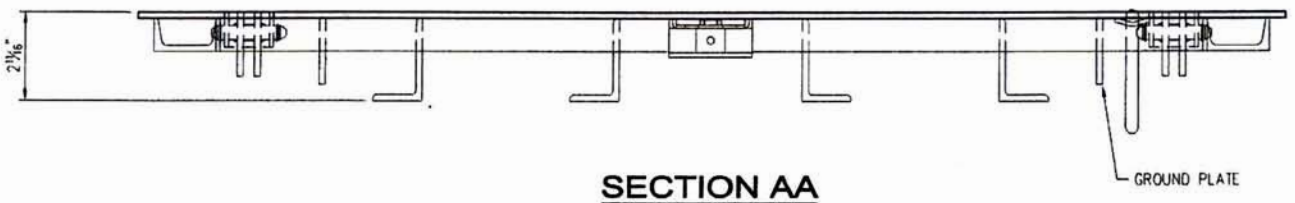


SECTION AA

**STRUCTURAL NOTES**

| | | |
|---|---|---|
| 1. | MATERIAL: | ASTM A36 STRUCTURAL STEEL STANDARDS |
| 2. | ASSEMBLY: | AWS D1.1 WELDING STANDARDS |
| 3. | COATING: | ASTM A123 HOT-DIP GALVANIZING STANDARDS |
| 4. | LOADS: | SUITABLE FOR AASHTO H-20 WHEEL LOADING IN OFF-STREET LOCATIONS WHERE NOT SUBJECTED TO HIGH-DENSITY TRAFFIC |

**GENERAL NOTES**

1. FRAMES AVAILABLE TO USE WITH THIS DOOR:
   2130020 (2436-NSA FRAME)
2. OPTIONAL LETTERING FOR DOORS AS REQUESTED:
   WSDOT TS
   WSDOT LT
   WSDOT EVC
   WSDOT TEL
   WSDOT COMM

APPROVED
Washington State
Department of Transportation
HQ Traffic Operations Office
DATE July 30, 2012 TAT

STEVEN C. HESTER STATE OF WASHINGTON 21830 REGISTERED PROFESSIONAL ENGINEER 7/23/12

| LTR | REVISION | DATE | BY |
|---|---|---|---|
| G | NO CHANGE TO THIS SHEET | 6/27/12 | MLF |
| - | (SEE CAD FILE FOR COMPLETE REVISION HISTORY) | - | - |

THIS DOCUMENT IS THE PROPERTY OF OLDCASTLE PRECAST, INC. IT IS SUBMITTED FOR REFERENCE PURPOSES ONLY AND SHALL NOT BE USED IN ANY WAY INJURIOUS TO THE INTERESTS OF SAID COMPANY. COPYRIGHT © 2012 Oldcastle Precast, Inc. All Rights Reserved

| | | | |
|---|---|---|---|
| SALES | | DATE | 4/2/10 |
| DESIGNER | JG | WEIGHT | 80 lbs |
| CHECKED | | CALC NO | |

Oldcastle Precast
P.O. BOX 898 AUBURN, WA 98071-0898
PHONE: 800-562-1836 FAX: 253-736-4201

2436-NS-NSA "WSDOT ITS"

CUSTOMER STANDARD PRODUCT

| | |
|---|---|
| CUSTOMER | WASHINGTON STATE D.O.T. |
| DRAWING NUMBER | 010-2130036-001 |
| SHEET | 1 of 3 |
| REVISION | G |

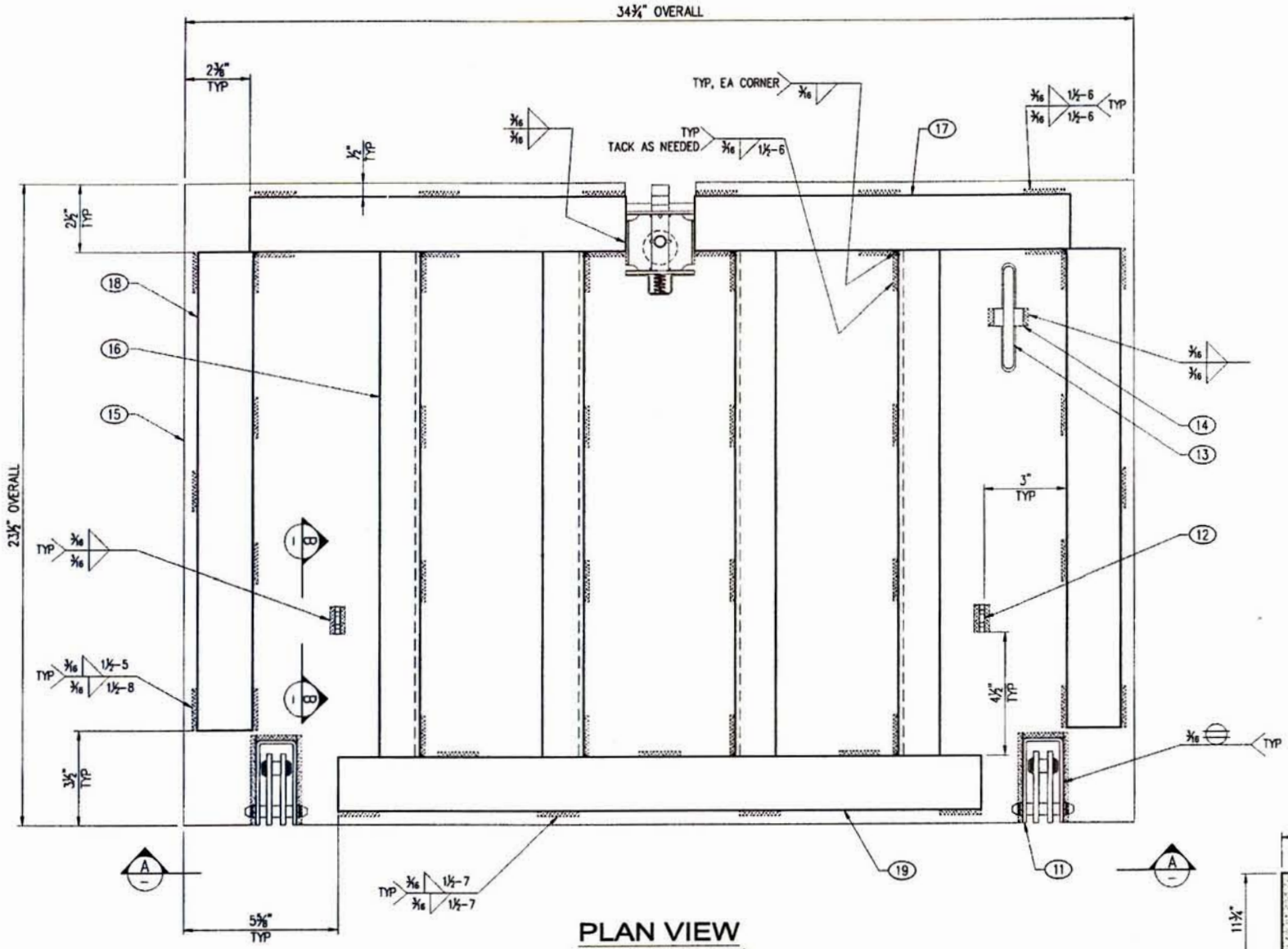


## PLAN VIEW
(UNDERSIDE OF DOOR SHOWN)

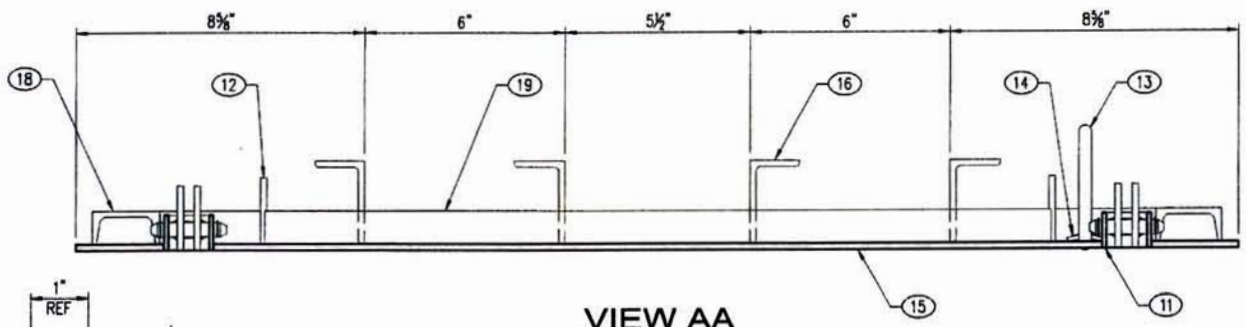


## VIEW AA

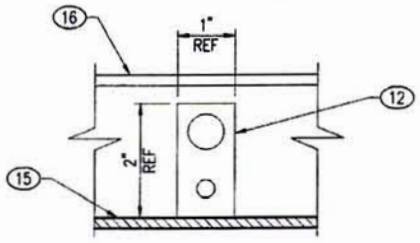


## SECTION BB

APPROVED
Washington State
Department of Transportation
HQ Traffic Operations Office
DATE July 30, 2012 TAT

## BILL OF MATERIAL

| ASTM SPEC | PART | QTY | U/M | DESCRIPTION | ITEM # |
|---|---|---|---|---|---|
| E1019 | 1 | 4 | ea | 1/2" H.D. Ext. Ring | OPC |
| A682 | 2 | 4 | ea | 7/16" H.D. Ext. Ring | OPC |
| 303 | 3 | 2 | ea | Hinge Pin 7/16" x 2.25" - SS | 010-5182015-001 |
| 303 | 4 | 2 | ea | Hinge Pin 1/2" x 1.055" - SS | 010-5182010-001 |
| A36 | 5 | 4 | ea | Hinge Side Plate - PLTD (3/16") | 010-5310010-001 |
| A313 | 6 | 1 | ea | Comp Spring OD.425"WD.045"L1.5" -SS | OPC |
| A1022 | 7 | 1 | ea | Cotter Pin - 3/32" x 3/4" - SS | OPC |
| A493 | 8 | 1 | ea | 3/8" Pentahead Bolt - SS | 010-5180810-001 |
| B221 | 9 | 1 | ea | Latch Bolt - ALUMINUM | 010-5210000-001 |
| A1011-CS | 10 | 1 | ea | Latch Cage - GALV | 010-5210045-001 |
| A1011-SS | 11 | 2 | ea | Hinge Pocket (11 gauge) | 010-5310040-001 |
| A36 | 12 | 2 | ea | Ground Plate (3/16" x 1") | 010-5210010-001 |
| A36 | 13 | 1 | ea | Ring Handle (3/8"ø) | 010-5210090-001 |
| A36 | 14 | 1 | ea | Ring Clip (3/16" x 3/4") | 010-5210100-001 |
| A36 | | 0.10 | sht | SlipNot Plate 72" x 120" x 3/16" | 010-5540120-000 |
| A36 | | 15.05 | lbs | Angle 2 1/2" x 1 1/2" x 3/16" | 010-5510244-000 |
| A36 | | 12.76 | lbs | Channel 2" x 1" x 1/8" | 010-5520230-000 |
| A123 | | 80 | lbs | Galvanizing Per Lb. | 010-5800000-000 |

## LAYOUT CUT LIST

| PART | QTY | DESCRIPTION | SIZE |
|---|---|---|---|
| 15 | 1 | Slipnot Plate 72 x 120 x 3/16 | SHT 3 |
| 16 | 4 | Angle 2 1/2" x 1 1/2" x 3/16" | 18 1/2" |
| 17 | 2 | Channel 2" x 1" x 1/8" | 13 3/4" |
| 18 | 2 | Channel 2" x 1" x 1/8" | 17 1/2" |
| 19 | 1 | Channel 2" x 1" x 1/8" | 23 1/2" |

## SHOP NOTES

1. OVERALL DIMENSIONS HAVE A MAXIMUM ALLOWABLE TOLERANCE OF ± 1/16"
2. ALL WELDS ARE 3/16" FILLET WELDS, UNLESS OTHERWISE NOTED
3. GRIND ALL SHARP EDGES
4. DOOR TO BE HOT-DIPPED GALVANIZED AFTER FABRICATION.

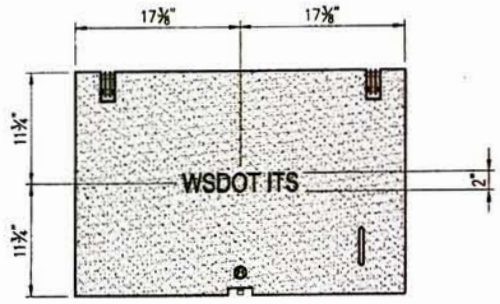


## LETTERING DETAIL
(TOPSIDE OF DOOR SHOWN)

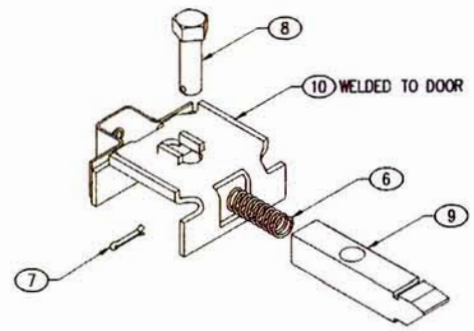


## LATCH ASSEMBLY

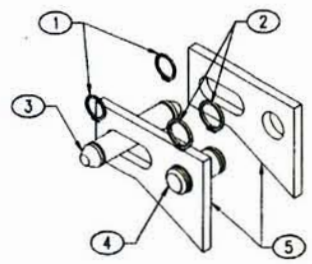


## HINGE ASSEMBLY
(SHOWN, BUT NOT INSTALLED UNTIL DOOR & FRAME ASSEMBLED)

STEVEN C. HIESTER
STATE OF WASHINGTON
21830
REGISTERED
PROFESSIONAL ENGINEER
7/23/12

| LTR. | REVISION | DATE | BY |
|---|---|---|---|
| G | UPDATED BOM | 6/27/12 | MLF |
| - | (SEE CAD FILE FOR COMPLETE REVISION HISTORY) | - | - |

THIS DOCUMENT IS THE PROPERTY OF OLDCASTLE PRECAST, INC. IT IS SUBMITTED FOR REFERENCE PURPOSES ONLY AND SHALL NOT BE USED IN ANY WAY INJURIOUS TO THE INTERESTS OF SAID COMPANY. COPYRIGHT © 2012 Oldcastle Precast, Inc. All Rights Reserved

| | | | |
|---|---|---|---|
| SALES | | DATE | 4/2/10 |
| DESIGNER | JG | WEIGHT | 80 lbs |
| CHECKED | | CALC NO | |

Oldcastle Precast®
P.O. BOX 888 AUBURN, WA 98071-0888
PHONE: 800-562-1636 FAX: 253-735-4291

2436-NS-NSA "WSDOT ITS"
ASSEMBLY & WELD DETAILS
CUSTOMER STANDARD PRODUCT

CUSTOMER: WASHINGTON STATE D.O.T.
SHEET: 2 of 3
DRAWING NUMBER: 010-2130036-001
REVISION: G

APPROVED
Washington State
Department of Transportation
HQ Traffic Operations Office
DATE July 30, 2012 TAT

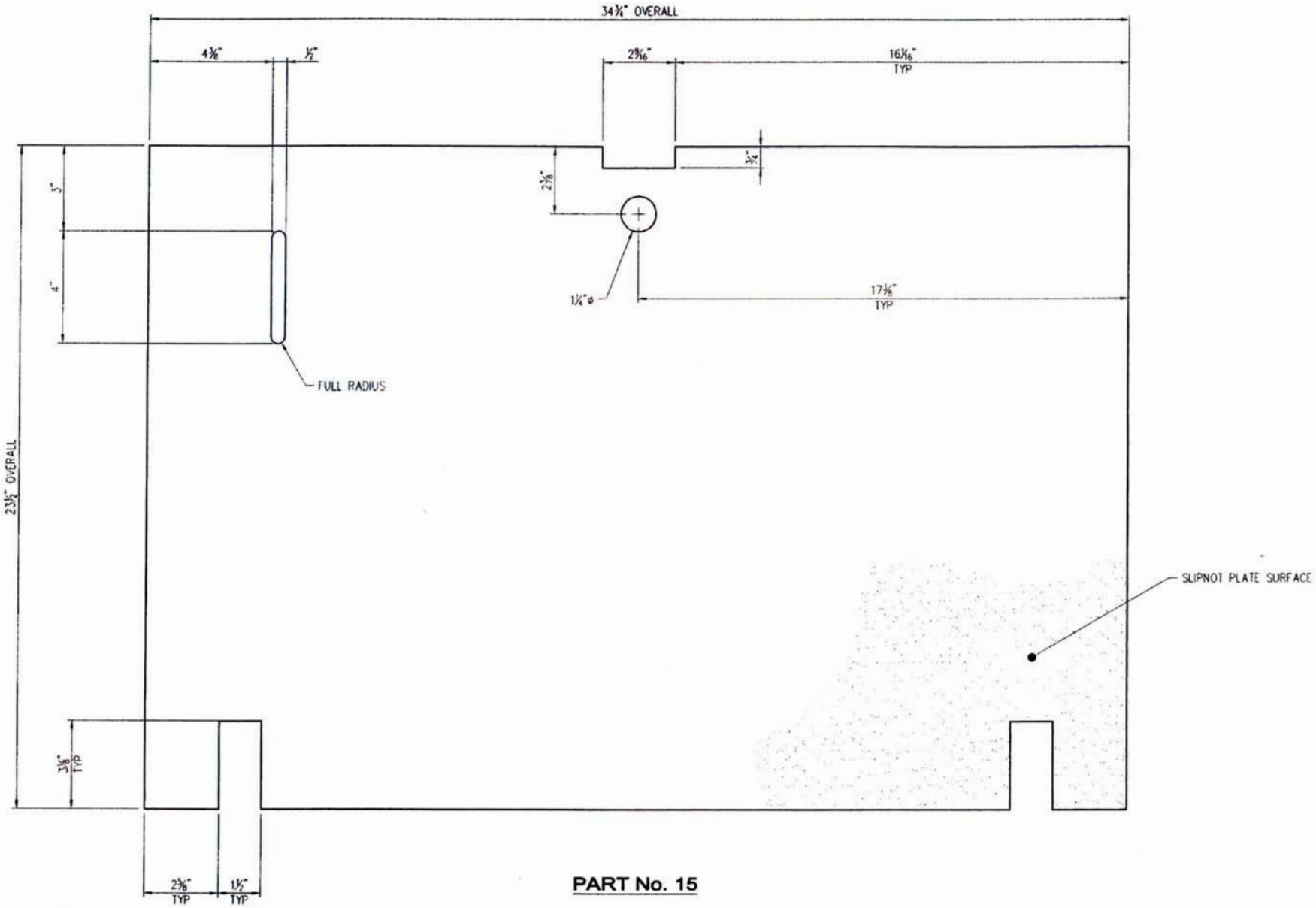


**PART No. 15**

| LAYOUT CUT LIST | | | |
|---|---|---|---|
| PART | QTY | DESCRIPTION | SIZE |
| 15 | 1 | Slipbot Plate 72 x 120 x 3/16 | |

**SHOP NOTES**

1. PLASMA PROGRAM NAME: 2436-NS-NSA-P15
2. CUT w/SLIPNOT PATTERN UP

STEVEN C. HIESTER
STATE OF WASHINGTON
21830
REGISTERED
PROFESSIONAL ENGINEER
11/23/12

| LTR. | REVISION | DATE | BY |
|---|---|---|---|
| G | NO CHANGE TO THIS SHEET | 6/27/12 | MLF |
| - | (SEE CAD FILE FOR COMPLETE REVISION HISTORY) | - | - |

THIS DOCUMENT IS THE PROPERTY OF OLDCASTLE PRECAST, INC. IT IS SUBMITTED FOR REFERENCE PURPOSES ONLY AND SHALL NOT BE USED IN ANY WAY INJURIOUS TO THE INTERESTS OF SAID COMPANY. COPYRIGHT © 2012 Oldcastle Precast, Inc. All Rights Reserved

| | | | |
|---|---|---|---|
| SALES | | DATE | 4/2/10 |
| DESIGNER | JG | WEIGHT | |
| CHECKED | | CALC NO | |

Oldcastle Precast
P.O. BOX 888 AUBURN, WA 98071-0888
PHONE: 800-860-1650 FAX: 253-735-4301

2436-NS-NSA "WSDOT ITS"
PLASMA DETAILS
CUSTOMER STANDARD PRODUCT

CUSTOMER: WASHINGTON STATE D.O.T.
DRAWING NUMBER: 010-2130036-001
SHEET: 3 of 3
REVISION: G

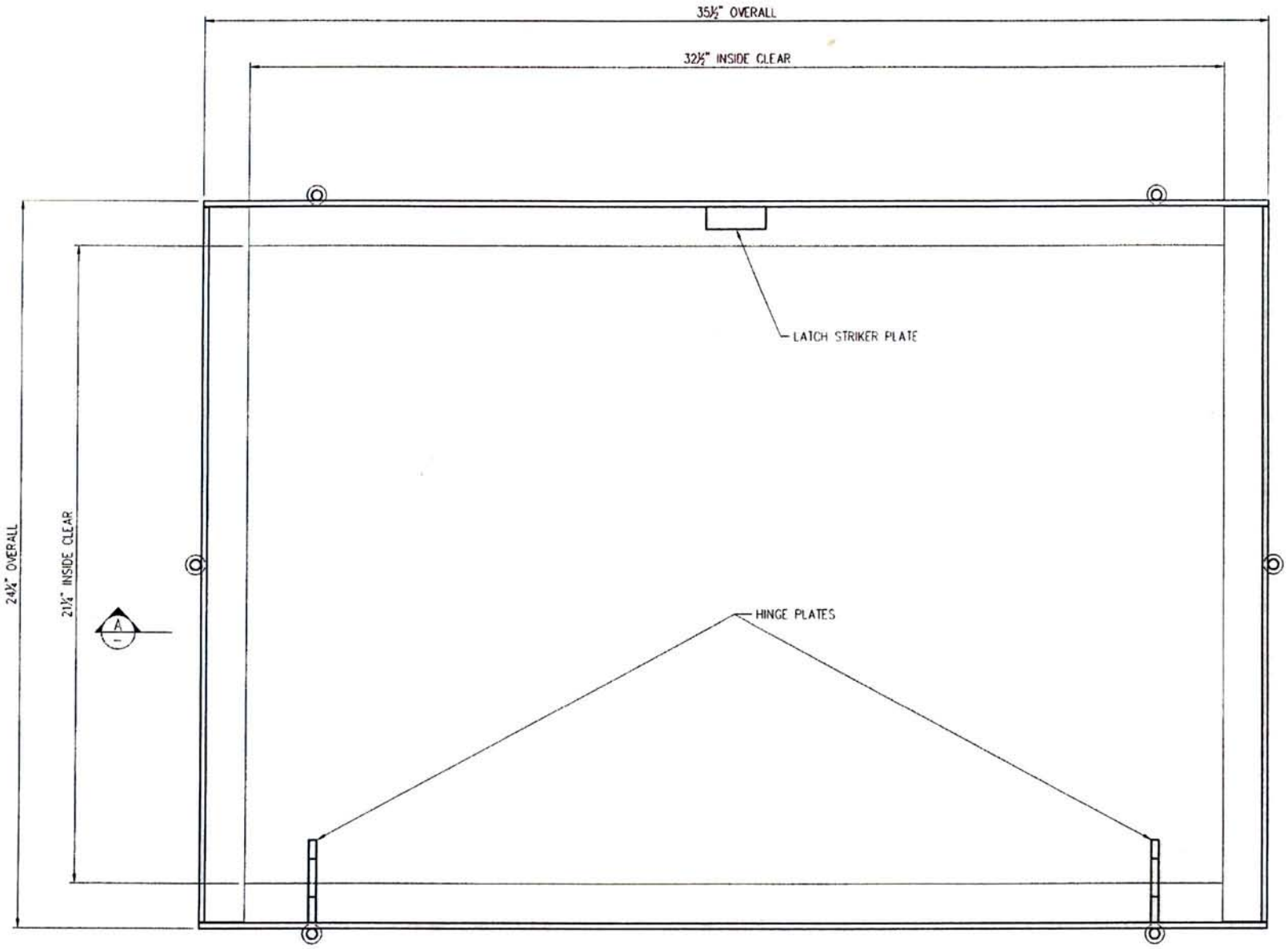


## PLAN VIEW

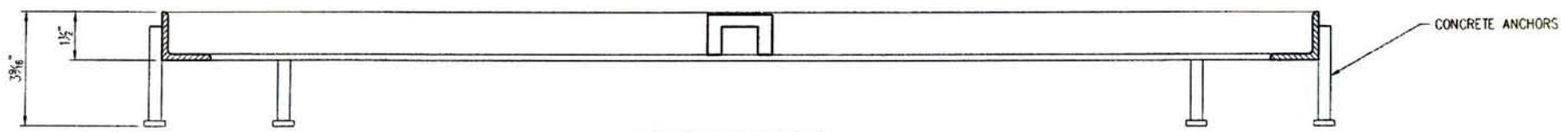


## SECTION AA

APPROVED
Washington State
Department of Transportation
HQ Traffic Operations Office
DATE July 30, 2012 TAT

### STRUCTURAL NOTES

1. ASSEMBLY: AWS D1.1 WELDING STANDARDS

### GENERAL NOTES

1. DOORS AVAILABLE TO USE WITH THIS FRAME:
   - 2130030 (2436-DP-NSA)
   - 2130032 (2436-DP-NSA "ELECTRIC")
   - 2130035 (2436-DP-NSA "COMCAST")
   - 2130038 (2436-NS-NSA "COMCAST")
   - 2130040 (2436-DP-NSA-RPH "GPUD")
   - 2130100 (2436-NS-NSA "SCL")
   - 2130138 (2436-NS-NSA)
   - 2130036 (2436-NS-NSA "WSDOT ITS")

STEVEN C. HIESTER
STATE OF WASHINGTON
21830
REGISTERED
PROFESSIONAL ENGINEER
7/23/12

| LTR. | REVISION | DATE | BY |
|---|---|---|---|
| E | NO CHANGES TO THIS SHEET | 6/27/12 | MLF |
| - | (SEE CAD FILE FOR COMPLETE REVISION HISTORY) | - | - |

THIS DOCUMENT IS THE PROPERTY OF OLDCASTLE PRECAST, INC. IT IS SUBMITTED FOR REFERENCE PURPOSES ONLY AND SHALL NOT BE USED IN ANY WAY INJURIOUS TO THE INTERESTS OF SAID COMPANY. COPYRIGHT © 2011 Oldcastle Precast, Inc. All Rights Reserved

| | | | |
|---|---|---|---|
| SALES | | DATE | 11/5/07 |
| DESIGNER | PAR | WEIGHT | 19 lbs |
| CHECKED | CAN | CALC NO | |

Oldcastle Precast®
P.O. BOX 808 AUBURN, WA 98071-0808
PHONE: 800-803-1638 FAX: 253-736-4301

2436-NSA FRAME

STANDARD PRODUCT

CUSTOMER

DRAWING NUMBER 010-2130020-001

SHEET 1 of 3

REVISION E

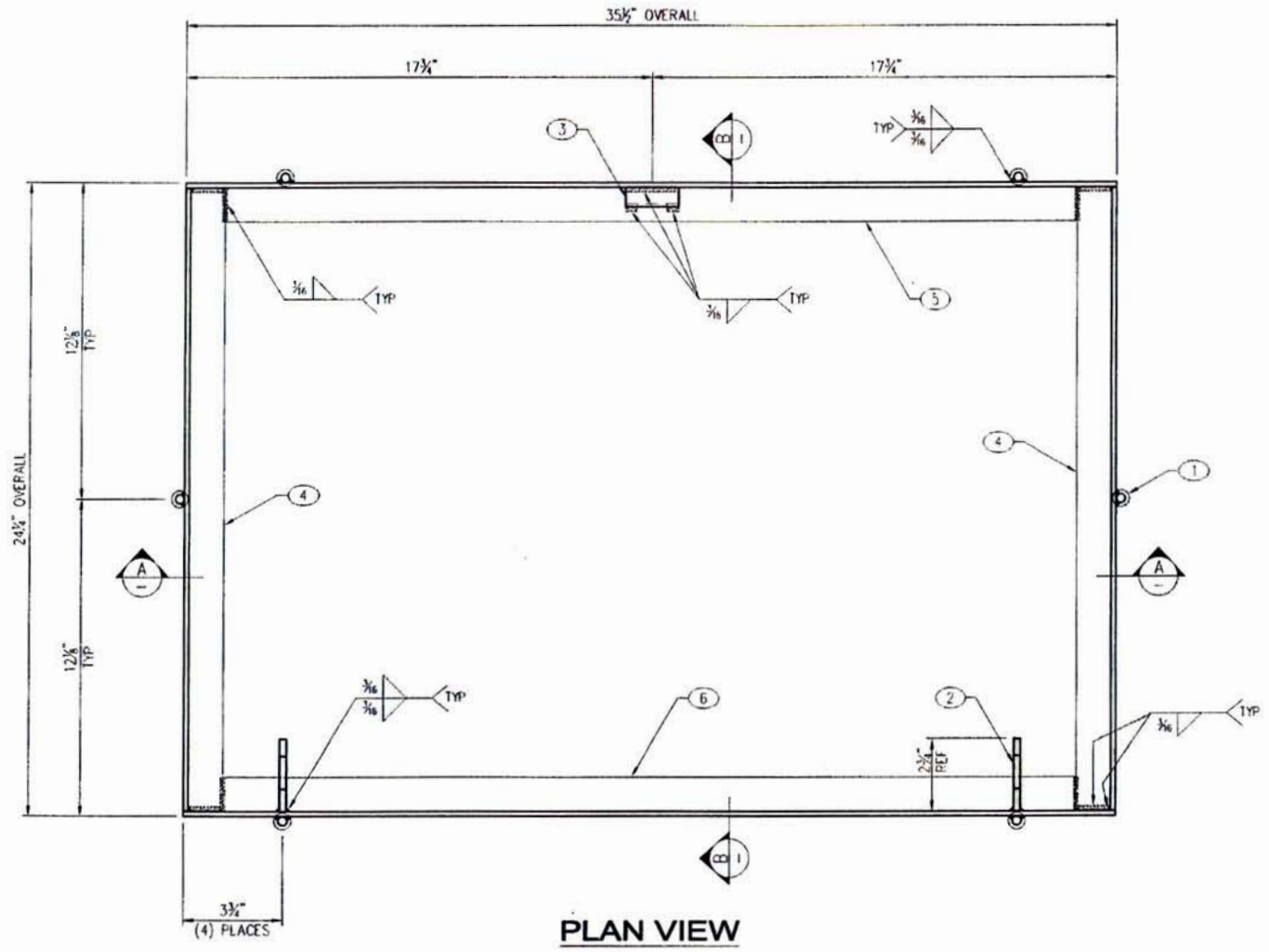


PLAN VIEW

Headed anchor stud per standard specification 9-06.15

| BILL OF MATERIAL | | | | | |
|---|---|---|---|---|---|
| ASTM SPEC | PART | QTY | U/M | DESCRIPTION | ITEM # |
| A108 | 1 | 6 | ea | Stud 3/8" X 3 1/8" | 010-5910455-000 |
| A36 | 2 | 2 | ea | Hinge Plate (1/4") | 010-5210600-001 |
| A1011-SS | 3 | 1 | ea | Striker Plate (11 gauge) | 010-5210020-001 |
| A36 | | 17.80 | lbs | Angle 1-1/2" x 1-1/2" x 3/16" | 010-5510210-000 |
| A123 | | 19.00 | lbs | Galvanizing Per Lb. | 010-5800000-000 |

| LAYOUT CUT LIST | | | |
|---|---|---|---|
| PART | QTY | DESCRIPTION | SIZE |
| 4 | 2 | Angle 1-1/2" x 1-1/2" x 3/16" | 23 13/16 |
| 5 | 1 | Angle 1-1/2" x 1-1/2" x 3/16" | SHT 3 |
| 6 | 1 | Angle 1-1/2" x 1-1/2" x 3/16" | SHT 3 |

**SHOP NOTES**

1. OVERALL DIMENSIONS HAVE A MAXIMUM ALLOWABLE TOLERANCE OF ± 1/16"
2. ALL WELDS ARE 3/16" FILLET WELDS, UNLESS OTHERWISE NOTED
3. GRIND ALL SHARP EDGES
4. FRAME TO BE HOT-DIPPED GALVANIZED AFTER FABRICATION

APPROVED AS NOTED
Washington State
Department of Transportation
HQ Traffic Operations Office
DATE July 30, 2012 TAT

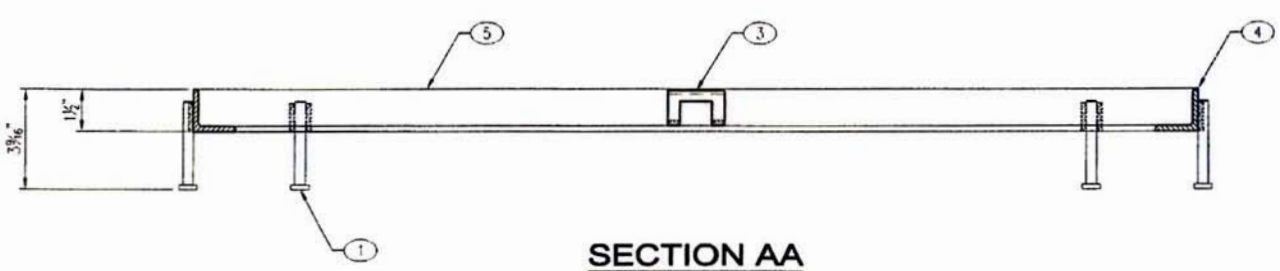


SECTION AA

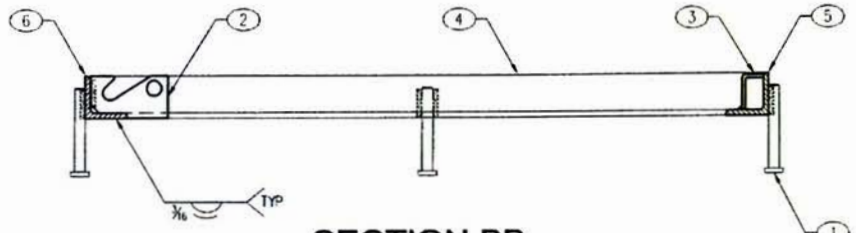


SECTION BB

STEVEN C. HIESTE
STATE OF WASHINGTON
21830
REGISTERED
PROFESSIONAL ENGINEER
9/23/12

| LTR | REVISION | DATE | BY |
|---|---|---|---|
| E | UPDATED BOM | 6/27/12 | MLF |
| - | (SEE CAD FILE FOR COMPLETE REVISION HISTORY) | - | - |

THIS DOCUMENT IS THE PROPERTY OF OLDCASTLE PRECAST, INC. IT IS SUBMITTED FOR REFERENCE PURPOSES ONLY AND SHALL NOT BE USED IN ANY WAY INJURIOUS TO THE INTERESTS OF SAID COMPANY. COPYRIGHT © 2011 Oldcastle Precast, Inc. All Rights Reserved

| | | | |
|---|---|---|---|
| SALES | | DATE | 11/5/07 |
| DESIGNER | PAR | WEIGHT | 19 lbs |
| CHECKED | CAN | CALC NO | |

Oldcastle Precast®

2436-NSA FRAME
LAYOUT & ASSEMBLY DETAILS
STANDARD PRODUCT

CUSTOMER

DRAWING NUMBER 010-2130020-001

SHEET 2 of 3

REVISION E

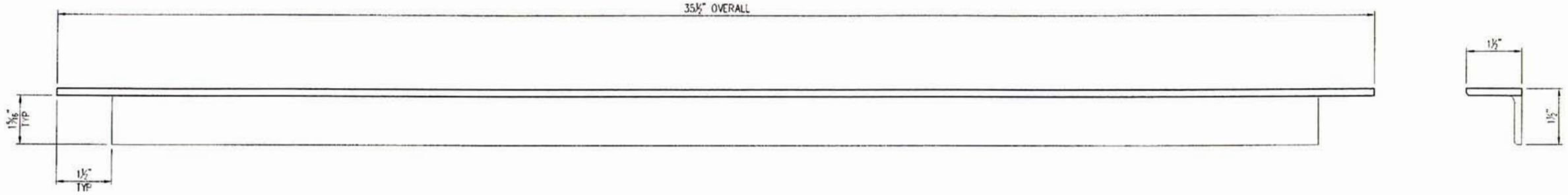


## PART No. 5

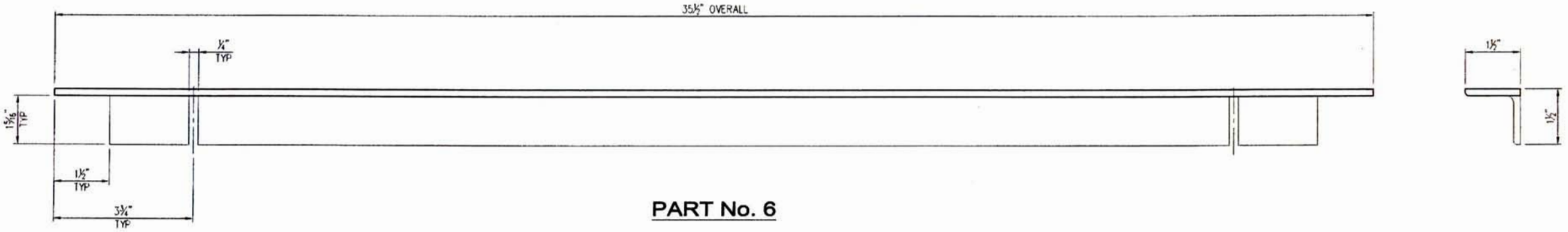


## PART No. 6

| LAYOUT CUT LIST | | | |
|---|---|---|---|
| PART | QTY | DESCRIPTION | SIZE |
| 5 | 1 | Angle 1-1/2" x 1-1/2" x 3/16" | 35 1/2 |
| 6 | 1 | Angle 1-1/2" x 1-1/2" x 3/16" | 35 1/2 |

APPROVED
Washington State
Department of Transportation
HQ Traffic Operations Office
DATE July 30, 2012 TAT

STEVEN C. HIESTER
STATE OF WASHINGTON
21830
REGISTERED
PROFESSIONAL ENGINEER
7/23/12

| LTR. | REVISION | DATE | BY |
|---|---|---|---|
| E | NO CHANGES TO THIS SHEET | 6/27/12 | MLF |
| - | (SEE CAD FILE FOR COMPLETE REVISION HISTORY) | - | - |

THIS DOCUMENT IS THE PROPERTY OF OLDCASTLE PRECAST, INC. IT IS SUBMITTED FOR REFERENCE PURPOSES ONLY AND SHALL NOT BE USED IN ANY WAY INJURIOUS TO THE INTERESTS OF SAID COMPANY. COPYRIGHT © 2011 Oldcastle Precast, Inc. All Rights Reserved

| | | | |
|---|---|---|---|
| SALES | | DATE 11/5/07 | |
| DESIGNER | PAR | WEIGHT | |
| CHECKED | CAN | CALC NO | |

Oldcastle Precast®
P.O. BOX 898 AUBURN, WA 98071-0898
PHONE: 800-562-1636 FAX: 253-736-4201

2436-NSA FRAME
PART DETAILS
STANDARD PRODUCT

CUSTOMER

SHEET 3 of 3

DRAWING NUMBER 010-2130020-001

REVISION E

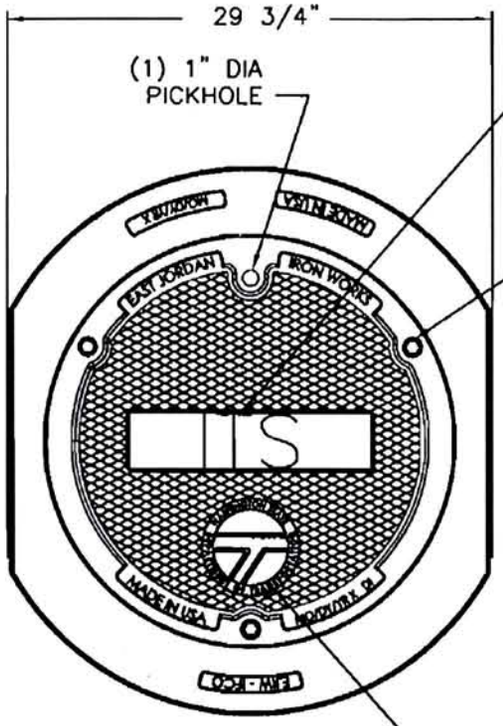


PLAN VIEW

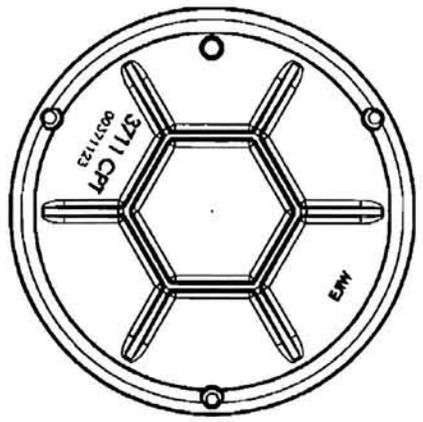


COVER BOTTOM

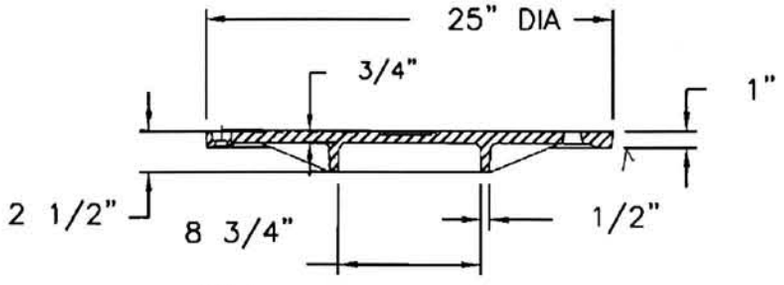


TYP
COVER SECTION

LOGO DETAIL

**APPROVED** as noted
Washington State
Department of Transportation
HQ Traffic Operations Office
DATE September 1, 2010 TAT

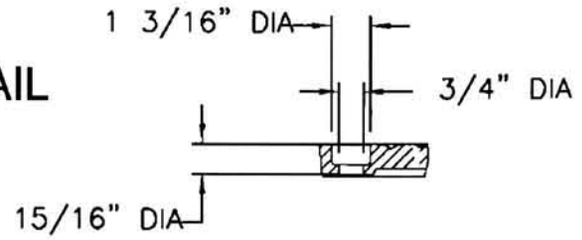


BOLT HOLE DETAIL

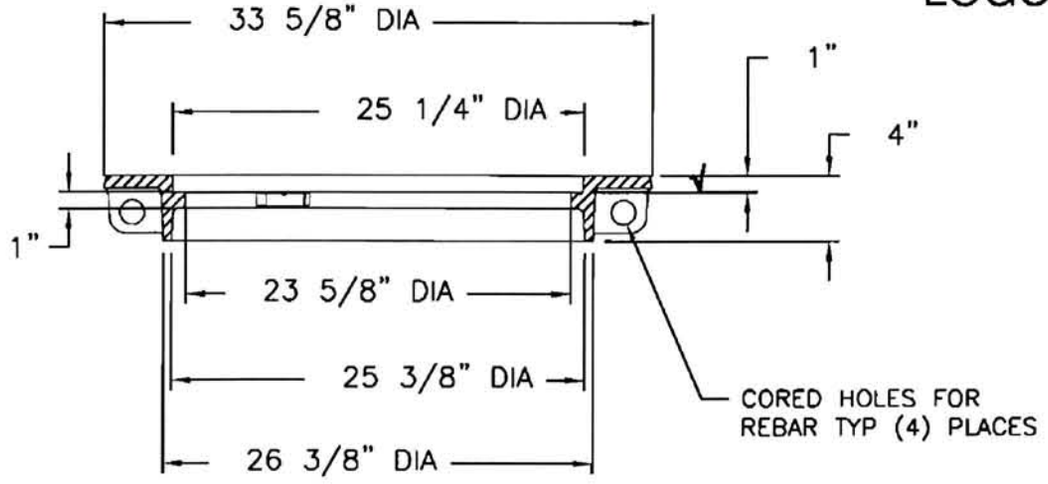


FRAME SECTION

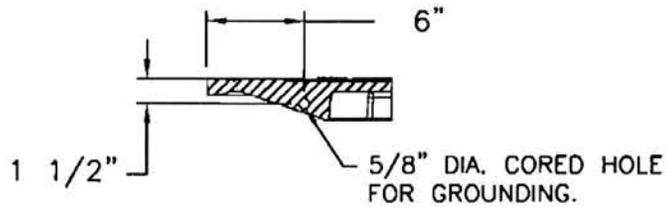


GROUND STRAP HOLE

EJIW EAST JORDAN IRON WORKS EST.1883
800-626-4653
www.ejiw.com
MADE IN USA

PRODUCT NUMBER
00371101

CATALOG NUMBER
3711CPT DI
3711ZPT

MANHOLE ASSEMBLY

LOAD RATING
HEAVY DUTY

COATING
UNDIPPED

ESTIMATED WEIGHT
FRAME: 133 LBS 60kg
COVER: 99 LBS 45kg
UNIT: 232 LBS 105kg

MATERIAL SPECIFICATION
FRAME – CAST IRON ASTM A48 CL35B
COVER – DUCTILE IRON ASTM A536

OPEN AREA
N/A

√ DESIGNATES MACHINED SURFACE

| DRAWN | DATE |
|---|---|
| DEW | 05/13/06 |
| LAST REVISED | DATE |
| JJD | 05/22/08 |

REFERENCE INFORMATION
00371124
00371113

CONFIDENTIAL: This drawing is the property of East Jordan Iron Works, Inc. and embodies confidential information, trade secret information, and/or know how that is the property of East Jordan Iron Works, Inc. © Copyright 2007 East Jordan Iron Works, Inc.

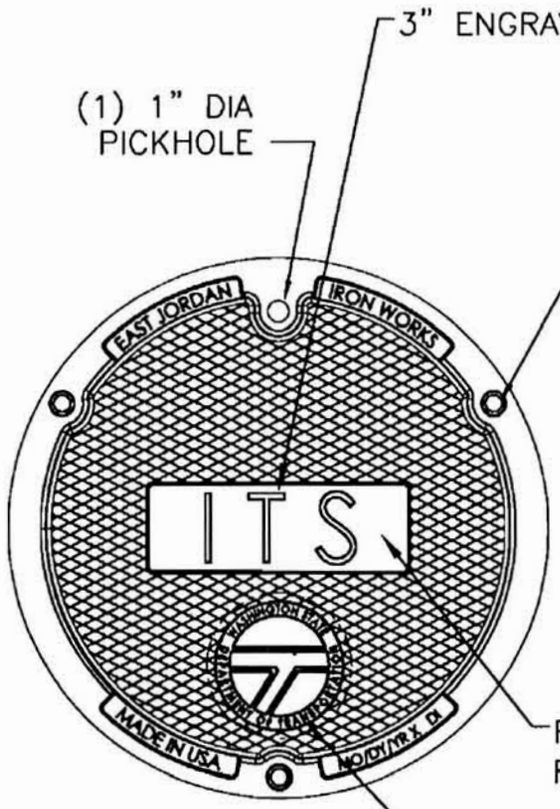


PLAN VIEW

LOGO DETAIL

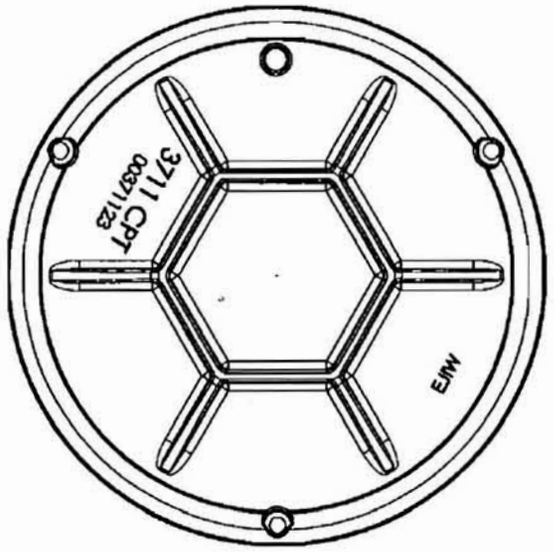


BOTTOM VIEW

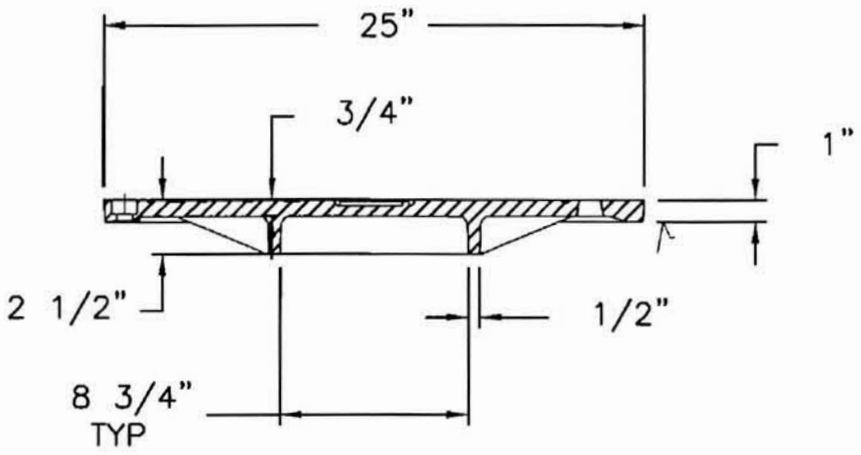


SECTION VIEW

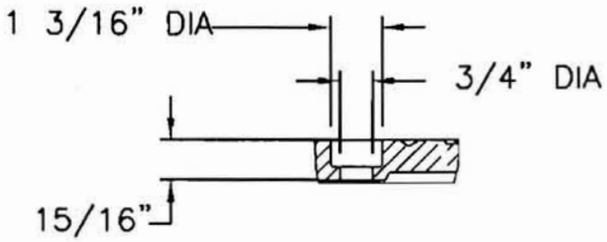


BOLT HOLE DETAIL
(37112301 PIN CORES)

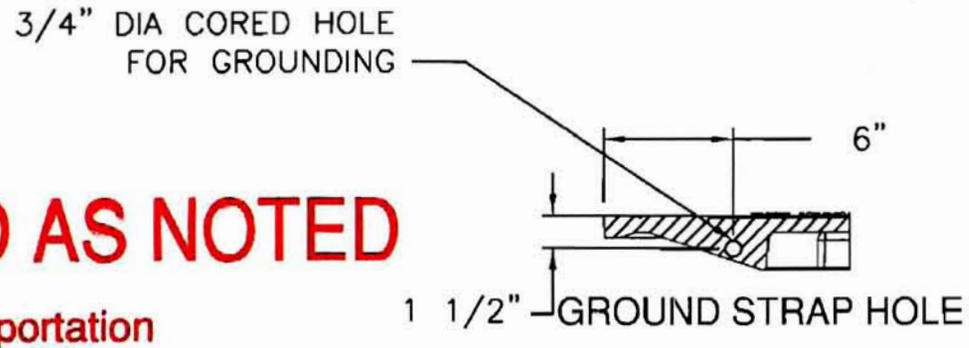


GROUND STRAP HOLE

**APPROVED AS NOTED**
Washington State
Department of Transportation
HQ Traffic Operations Office
DATE September 1, 2010 TAT

CONFIDENTIAL: This drawing is the property of East Jordan Iron Works, Inc. and embodies confidential information, trade secret information, and/or know how that is the property of

EJIW EAST JORDAN IRON WORKS EST.1883
800–626–4653
www.ejiw.com
MADE IN USA

PRODUCT NUMBER
00371123

CATALOG NUMBER
3711CPT DI

MANHOLE COVER

LOAD RATING
HEAVY DUTY

COATING
UNDIPPED

ESTIMATED WEIGHT
COVER: 99 LBS 45kg

MATERIAL SPECIFICATION
COVER – DUCTILE IRON ASTM A536

OPEN AREA
N/A

√ DESIGNATES MACHINED SURFACE

| DRAWN | DATE |
|---|---|
| DEW | 08/29/07 |
| LAST REVISED | DATE |
| | |

REFERENCE INFORMATION
00371123.1C
00371123.1D