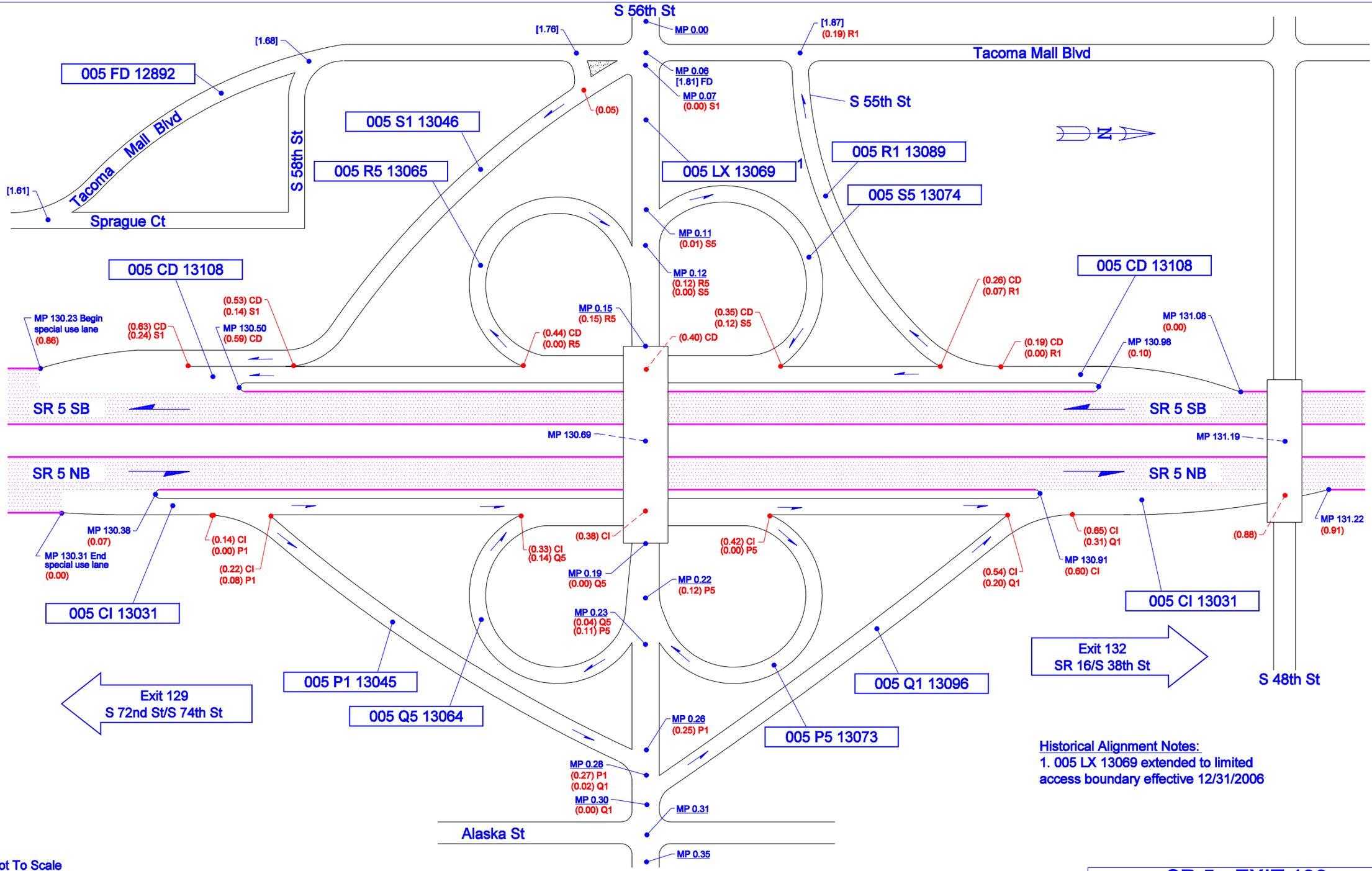

Historical Alignment Notes:
1. 005 LX 13069 extended to limited access boundary effective 12/31/2006

Not To Scale

03/09/2007	KLK	WSDOT OLYMPIC REGION	TACOMA, PIERCE COUNTY	JCT S 56TH ST/TACOMA MALL BLVD	SR 5 - EXIT 130