DRAWN BY: ADAM COCHRAN

WIND EXPOSURE & VELOCITY		
NOISE BARRIER TYPE	WIND EXPOSURE	WIND VELOCITY (MPH)
16A	B1	80
16B	B1	90
16C	B2	80
16D	B2	90

SOIL TYPE	
SOIL TYPE	ANGLE OF INTERNAL FRICTION ϕ (DEGREES)
D1	32
D2	38

CMU = CONCRETE MASONRY UNIT

WALL HT H	TYPE 16A CMU WIDTH	X	DEPTH D1	DEPTH D2	BAR "C"	BAR "D"
6' - 0"	8"	—	3' - 3"	3' - 0"	—	#6 @ 48"
8' - 0"	8"	—	3' - 6"	3' - 4"	—	#6 @ 48"
10' - 0"	8"	—	3' - 10"	3' - 6"	—	#6 @ 48"
12' - 0"	8"	—	4' - 7"	3' - 8"	—	#6 @ 48"
14' - 0"	8"	—	4' - 4"	3' - 10"	—	#6 @ 32"
16' - 0"	8"	—	4' - 7"	4' - 1"	—	#6 @ 24"
18' - 0"	10"	5' - 4"	4' - 10"	4' - 3"	#6 @ 48"	#6 @ 48"
20' - 0"	10"	6' - 0"	5' - 3"	4' - 9"	#6 @ 32"	#6 @ 32"
22' - 0"	10"	6' - 8"	5' - 6"	5' - 0"	#6 @ 24"	#6 @ 24"
24' - 0"	10"	7' - 4"	5' - 9"	5' - 3"	#6 @ 18"	#6 @ 18"

WALL HT H	TYPE 16B CMU WIDTH	X	DEPTH D1	DEPTH D2	BAR "C"	BAR "D"
6' - 0"	8"	—	3' - 8"	3' - 4"	—	#6 @ 48"
8' - 0"	8"	—	4' - 0"	3' - 8"	—	#6 @ 48"
10' - 0"	8"	—	4' - 4"	3' - 10"	—	#6 @ 48"
12' - 0"	8"	—	4' - 8"	4' - 2"	—	#6 @ 40"
14' - 0"	10"	4' - 0"	4' - 11"	4' - 5"	#6 @ 40"	#6 @ 40"
16' - 0"	10"	4' - 8"	5' - 3"	4' - 8"	#6 @ 32"	#6 @ 32"
18' - 0"	10"	5' - 4"	5' - 6"	4' - 10"	#6 @ 24"	#6 @ 24"
20' - 0"	10"	6' - 0"	4' - 9"	5' - 3"	#7 @ 24"	#7 @ 24"
22' - 0"	10"	8' - 0"	6' - 0"	5' - 6"	#7 @ 16"	#7 @ 16"
24' - 0"	10"	10' - 0"	6' - 3"	5' - 9"	#8 @ 16"	#8 @ 16"

WALL HT H	TYPE 16C CMU WIDTH	X	DEPTH D1	DEPTH D2	BAR "C"	BAR "D"
6' - 0"	8"	—	3' - 6"	3' - 3"	—	#6 @ 48"
8' - 0"	8"	—	3' - 9"	3' - 5"	—	#6 @ 48"
10' - 0"	8"	—	4' - 7"	3' - 8"	—	#6 @ 48"
12' - 0"	8"	—	4' - 4"	3' - 11"	—	#6 @ 32"
14' - 0"	8"	—	4' - 8"	4' - 2"	—	#6 @ 24"
16' - 0"	10"	4' - 0"	4' - 11"	4' - 5"	#6 @ 40"	#6 @ 40"
18' - 0"	10"	4' - 8"	5' - 3"	4' - 8"	#6 @ 32"	#6 @ 32"
20' - 0"	10"	5' - 4"	5' - 6"	5' - 0"	#6 @ 24"	#6 @ 24"
22' - 0"	10"	6' - 0"	5' - 9"	5' - 3"	#6 @ 16"	#6 @ 16"
24' - 0"	10"	7' - 8"	6' - 0"	5' - 6"	#7 @ 16"	#7 @ 16"

WALL HT H	TYPE 16D CMU WIDTH	X	DEPTH D1	DEPTH D2	BAR "C"	BAR "D"
6' - 0"	8"	—	3' - 10"	3' - 5"	—	#6 @ 48"
8' - 0"	8"	—	4' - 2"	3' - 9"	—	#6 @ 48"
10' - 0"	8"	—	4' - 5"	4' - 0"	—	#6 @ 32"
12' - 0"	10"	4' - 0"	4' - 10"	4' - 4"	#6 @ 48"	#6 @ 48"
14' - 0"	10"	4' - 0"	5' - 3"	4' - 7"	#6 @ 32"	#6 @ 32"
16' - 0"	10"	4' - 8"	5' - 7"	4' - 11"	#6 @ 24"	#6 @ 24"
18' - 0"	10"	5' - 4"	5' - 10"	5' - 1"	#6 @ 18"	#6 @ 18"
20' - 0"	10"	7' - 4"	6' - 0"	5' - 6"	#7 @ 18"	#7 @ 18"
22' - 0"	10"	9' - 8"	6' - 6"	5' - 9"	#8 @ 18"	#8 @ 18"
24' - 0"	10"	12' - 0"	6' - 9"	6' - 0"	#9 @ 18"	#9 @ 18"

NOTES

1. Wall to be designated Noise Barrier Wall Type 16A, 16B, 16C or 16D. The Contract specifies actual wall designations.
2. For intermediate wall heights, use the next higher H.
3. All masonry shall be hollow unit and installed as running bond.
4. All masonry is to be specially inspected.
5. All Concrete Masonry Unit (CMU) cells that have vertical steel reinforcing bars or bond beam units shall be filled with grout.
6. Panels shall have at least 3 feet of level ground on each side.
7. Construction joints in the trench footing shall be spaced at 120 feet maximum.
8. See "Masonry Wall Finishes and Details" sheet for masonry block finishes, special shapes, sizes and layouts.
9. The Contract specifies actual foundation requirements D1 or D2.

NOTE: THIS PLAN IS NOT A LEGAL ENGINEERING DOCUMENT BUT AN ELECTRONIC DUPLICATE. THE ORIGINAL, SIGNED BY THE ENGINEER AND APPROVED FOR PUBLICATION, IS KEPT ON FILE AT THE WASHINGTON STATE DEPARTMENT OF TRANSPORTATION. A COPY MAY BE OBTAINED UPON REQUEST.

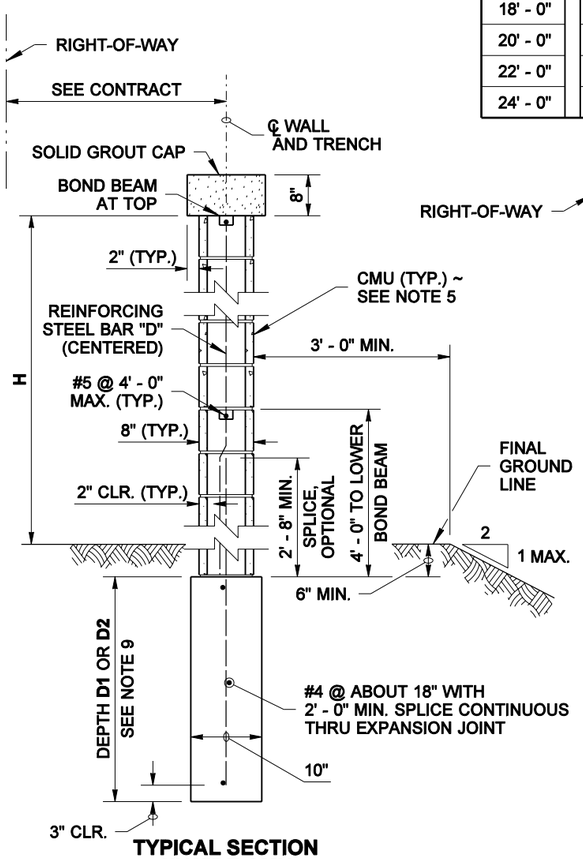

TYPICAL SECTION 8" WIDE CMU

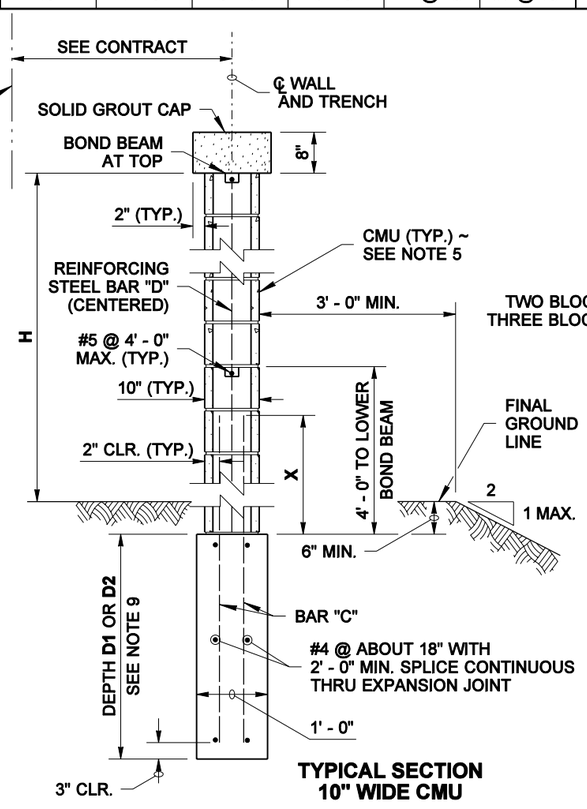

TYPICAL SECTION 10" WIDE CMU

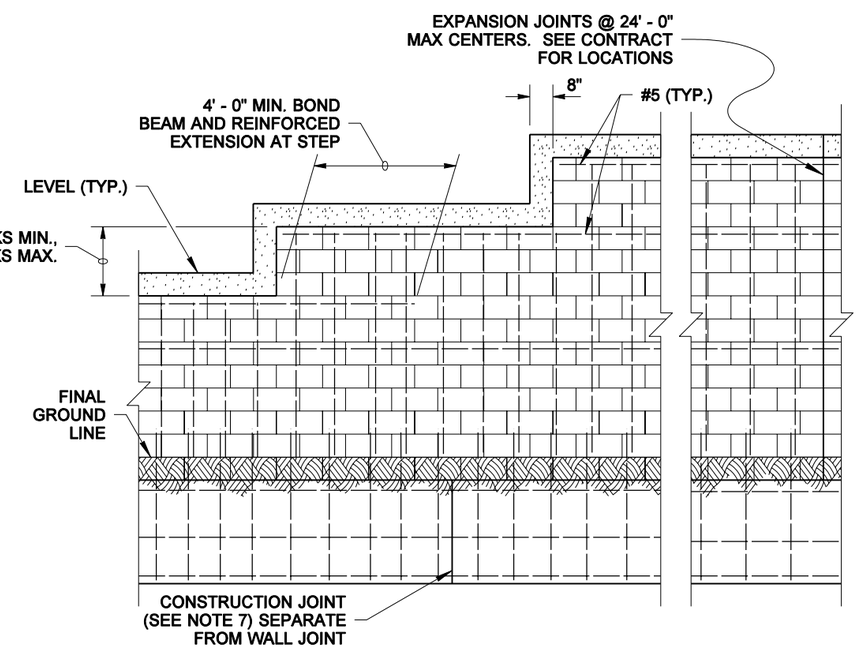

ELEVATION

MASONRY WALL ON TRENCH FOOTING

BIJAN KHALEGHI
STATE OF WASHINGTON
27695
REGISTERED PROFESSIONAL ENGINEER

EXPIRES AUGUST 23, 2006

NOISE BARRIER WALL TYPE 16

STANDARD PLAN D-2.60-00

SHEET 1 OF 2 SHEETS

APPROVED FOR PUBLICATION

Harold J. Peterfeso — STATE DESIGN ENGINEER
11-10-05 — DATE

Washington State Department of Transportation

DRAWN BY: ADAM COCHRAN

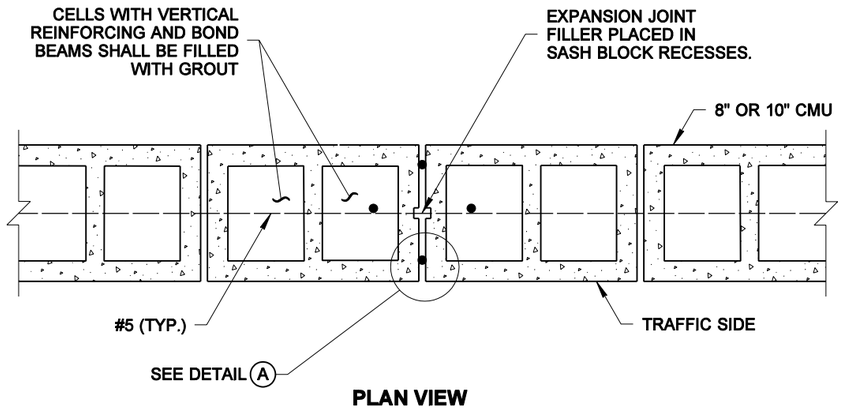

PLAN VIEW

TYPICAL EXPANSION JOINT

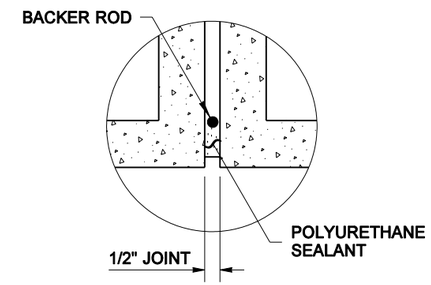

DETAIL A

TYPICAL BOTH SIDES OF WALL

NOTE: THIS PLAN IS NOT A LEGAL ENGINEERING DOCUMENT BUT AN ELECTRONIC DUPLICATE. THE ORIGINAL, SIGNED BY THE ENGINEER AND APPROVED FOR PUBLICATION, IS KEPT ON FILE AT THE WASHINGTON STATE DEPARTMENT OF TRANSPORTATION. A COPY MAY BE OBTAINED UPON REQUEST.

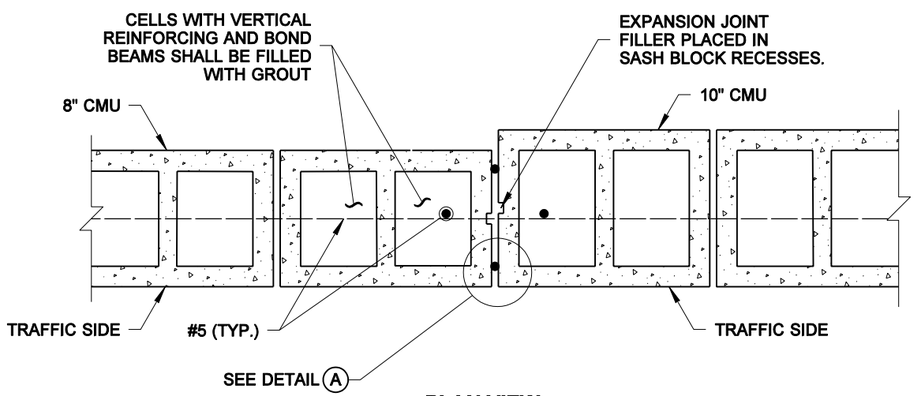

PLAN VIEW

EXPANSION JOINT AT WIDTH STEP

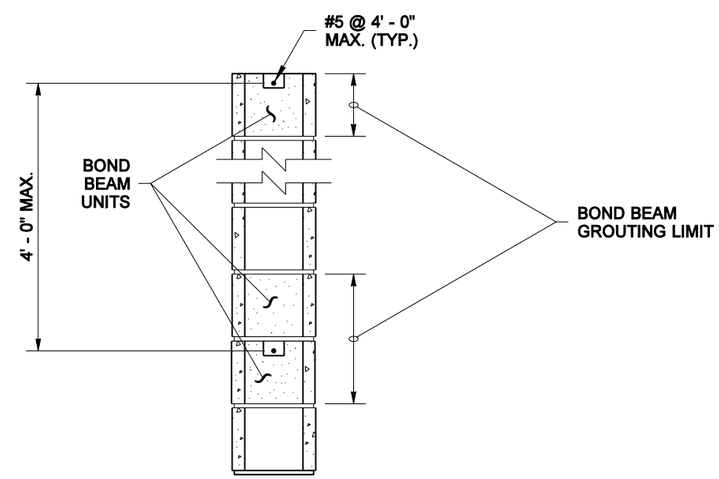

BOND BEAM DETAIL

MASONRY WALL ON TRENCH FOOTING

EXPIRES AUGUST 23, 2006

NOISE BARRIER WALL TYPE 16

STANDARD PLAN D-2.60-00

SHEET 2 OF 2 SHEETS

APPROVED FOR PUBLICATION

Harold J. Peterfeso — STATE DESIGN ENGINEER

11-10-05 — DATE

Washington State Department of Transportation