DRAWN BY: ADAM COCHRAN

WALL HT H	TYPE 11A DEPTH D1	TYPE 11A DEPTH D2	TYPE 11A BAR "A"	TYPE 11A BAR "B"	TYPE 11A Y	TYPE 11A PLATE THICK. T	TYPE 11A ANCHOR BOLT. DIAM.	TYPE 11B DEPTH D1	TYPE 11B DEPTH D2	TYPE 11B BAR "A"	TYPE 11B BAR "B"	TYPE 11B Y	TYPE 11B PLATE THICK. T	TYPE 11B ANCHOR BOLT. DIAM.
6' - 0"	5' - 0"	4' - 6"	4 ~ #3	4 ~ #7	2' - 0"	1/2"	1"	5' - 9"	5' - 0"	4 ~ #3	4 ~ #7	2' - 0"	1/2"	1"
8' - 0"	5' - 6"	5' - 0"	4 ~ #3	4 ~ #7	2' - 0"	1/2"	1"	6' - 6"	5' - 9"	4 ~ #3	4 ~ #7	2' - 0"	5/8"	1"
10' - 0"	6' - 3"	5' - 3"	4 ~ #3	4 ~ #7	2' - 0"	5/8"	1"	7' - 3"	6' - 3"	4 ~ #4	4 ~ #7	2' - 2"	3/4"	1"
12' - 0"	6' - 9"	5' - 9"	4 ~ #3	4 ~ #7	2' - 0"	3/4"	1"	8' - 0"	6' - 9"	4 ~ #4	4 ~ #7	2' - 7"	1"	1"
14' - 0"	7' - 3"	6' - 3"	4 ~ #4	4 ~ #7	2' - 2"	3/4"	1"	8' - 9"	7' - 6"	4 ~ #5	4 ~ #7	2' - 7"	1 1/8"	1"
16' - 0"	7' - 9"	6' - 9"	4 ~ #4	4 ~ #7	2' - 7"	7/8"	1"	9' - 6"	8' - 0"	4 ~ #6	4 ~ #7	3' - 3"	1 1/4"	1"
18' - 0"	8' - 6"	7' - 0"	4 ~ #5	4 ~ #7	2' - 7"	1"	1"	10' - 3"	8' - 6"	4 ~ #6	4 ~ #8	4' - 3"	1 3/8"	1"
20' - 0"	9' - 0"	7' - 6"	4 ~ #5	4 ~ #7	3' - 3"	1 1/4"	1"	10' - 9"	9' - 0"	4 ~ #7	4 ~ #8	4' - 3"	1 3/8"	1"
22' - 0"	9' - 6"	8' - 0"	4 ~ #6	4 ~ #7	3' - 3"	1 3/8"	1"	11' - 6"	9' - 6"	4 ~ #8	4 ~ #9	5' - 5"	1 1/2"	1"
24' - 0"	10' - 0"	8' - 3"	4 ~ #6	4 ~ #8	4' - 3"	1 1/2"	1"	12' - 0"	10' - 0"	4 ~ #8	4 ~ #10	6' - 10"	1 5/8"	1"

WALL HT H	TYPE 11C DEPTH D1	TYPE 11C DEPTH D2	TYPE 11C BAR "A"	TYPE 11C BAR "B"	TYPE 11C Y	TYPE 11C PLATE THICK. T	TYPE 11C ANCHOR BOLT. DIAM.	TYPE 11D DEPTH D1	TYPE 11D DEPTH D2	TYPE 11D BAR "A"	TYPE 11D BAR "B"	TYPE 11D Y	TYPE 11D PLATE THICK. T	TYPE 11D ANCHOR BOLT. DIAM.
6' - 0"	5' - 3"	4' - 9"	4 ~ #3	4 ~ #7	2' - 0"	1/2"	1"	6' - 3"	5' - 3"	4 ~ #3	4 ~ #7	2' - 0"	1/2"	1"
8' - 0"	6' - 0"	5' - 3"	4 ~ #3	4 ~ #7	2' - 0"	5/8"	1"	7' - 0"	6' - 0"	4 ~ #3	4 ~ #7	2' - 0"	3/4"	1"
10' - 0"	6' - 9"	5' - 9"	4 ~ #3	4 ~ #7	2' - 0"	3/4"	1"	8' - 0"	6' - 9"	4 ~ #4	4 ~ #7	2' - 2"	7/8"	1"
12' - 0"	7' - 6"	6' - 3"	4 ~ #4	4 ~ #7	2' - 2"	1"	1"	8' - 9"	7' - 3"	4 ~ #5	4 ~ #7	2' - 7"	1"	1"
14' - 0"	8' - 0"	6' - 9"	4 ~ #4	4 ~ #7	2' - 7"	1"	1"	9' - 6"	8' - 0"	4 ~ #5	4 ~ #7	3' - 3"	1 1/4"	1"
16' - 0"	8' - 9"	7' - 3"	4 ~ #5	4 ~ #7	2' - 7"	1 1/8"	1"	10' - 3"	8' - 6"	4 ~ #6	4 ~ #8	4' - 3"	1 1/4"	1"
18' - 0"	9' - 3"	7' - 9"	4 ~ #6	4 ~ #7	3' - 3"	1 1/8"	1"	11' - 0"	9' - 3"	4 ~ #7	4 ~ #8	4' - 3"	1 3/8"	1"
20' - 0"	10' - 0"	8' - 3"	4 ~ #6	4 ~ #8	4' - 3"	1 1/4"	1"	11' - 9"	9' - 9"	4 ~ #8	4 ~ #9	5' - 5"	1 1/2"	1 1/8"
22' - 0"	10' - 6"	8' - 9"	4 ~ #7	4 ~ #8	4' - 3"	1 3/8"	1"	12' - 6"	10' - 3"	4 ~ #8	4 ~ #10	6' - 10"	1 5/8"	1 1/4"
24' - 0"	11' - 3"	9' - 3"	4 ~ #7	4 ~ #9	5' - 5"	1 1/2"	1"	13' - 3"	11' - 0"	4 ~ #9	4 ~ #11	8' - 5"	1 3/4"	1 1/4"

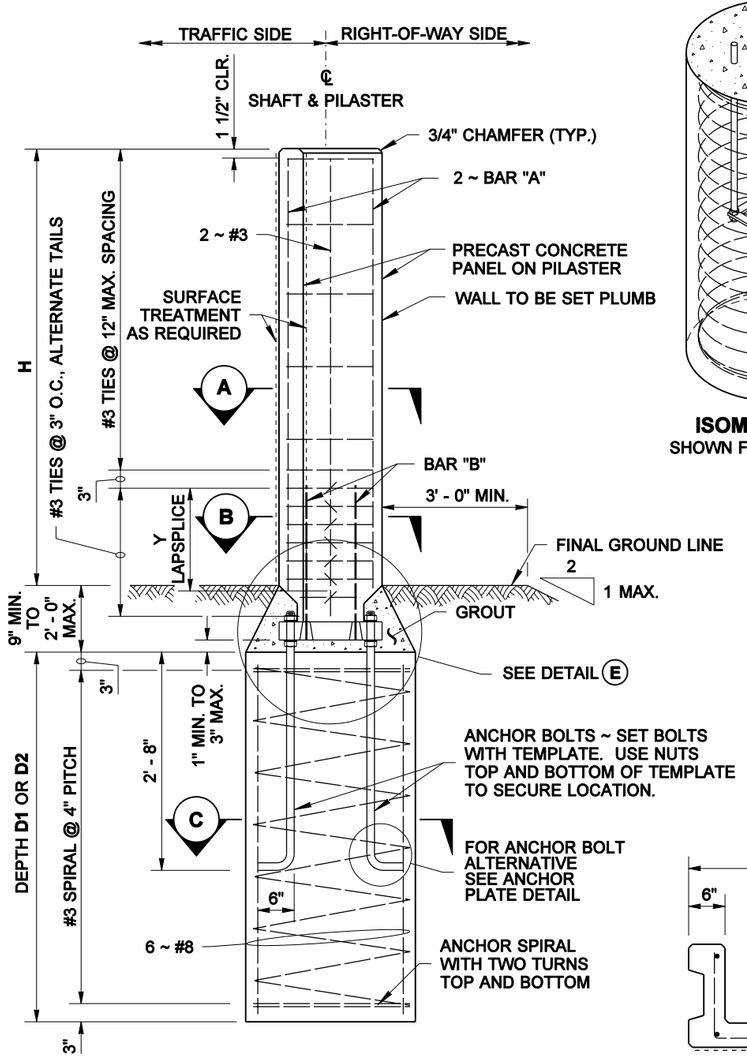

TYPICAL SECTION

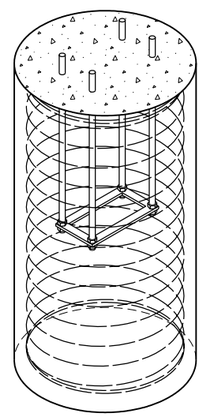

ISOMETRIC VIEW
SHOWN FOR INSTALLATION

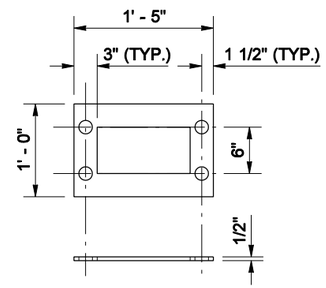

ANCHOR PLATE DETAIL

THREADED ROD WITH NUTS TOP AND BOTTOM

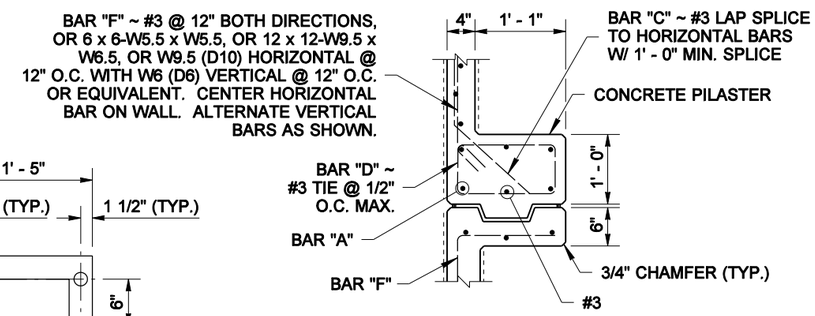

SECTION A

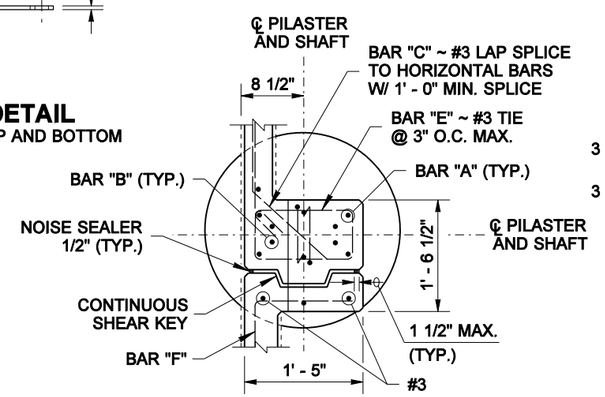

SECTION B

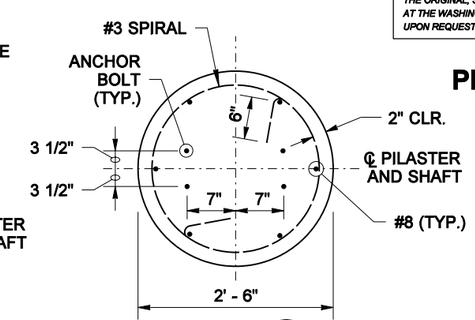

SECTION C

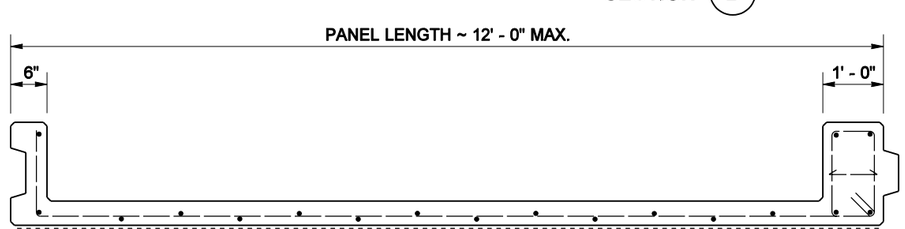

PLAN VIEW

TYPICAL PANEL

NOTES

1. Wall to be designated Noise Barrier Wall Type 11A, 11B, 11C or 11D. The Contract specifies actual wall dimensions.
2. For intermediate wall heights, use the next higher H.
3. Panels shall have at least 3 feet of level ground on each side.
4. The Contract specifies actual foundation requirements D1 or D2.
5. Maximum Panel length shall be 12 feet.

NOTE: THIS PLAN IS NOT A LEGAL ENGINEERING DOCUMENT BUT AN ELECTRONIC DUPLICATE. THE ORIGINAL, SIGNED BY THE ENGINEER AND APPROVED FOR PUBLICATION, IS KEPT ON FILE AT THE WASHINGTON STATE DEPARTMENT OF TRANSPORTATION. A COPY MAY BE OBTAINED UPON REQUEST.

PRECAST CONCRETE WALL ON SHAFT FOUNDATION

EXPIRES AUGUST 23, 2006

WIND EXPOSURE & VELOCITY		
NOISE BARRIER TYPE	WIND EXPOSURE	WIND VELOCITY (MPH)
11A	B1	80
11B	B1	90
11C	B2	80
11D	B2	90

SOIL TYPE	
SOIL TYPE	ANGLE OF INTERNAL FRICTION ϕ (DEGREES)
D1	32
D2	38

NOISE BARRIER WALL TYPE 11

STANDARD PLAN D-2.36-00

SHEET 1 OF 3 SHEETS

APPROVED FOR PUBLICATION

Harold J. Peterfeso — STATE DESIGN ENGINEER

11-10-05 — DATE

Washington State Department of Transportation

DRAWN BY: ADAM COCHRAN

S	A	T	F
#7	1 21/32"	1 1/2"	1 1/8"
#9	2"	1 3/4"	1 3/8"
#11	2 15/32"	2 1/4"	1 21/32"

BOLT DIAM.	DIAM. "D"	SLOT "G"
1"	1 1/8"	1 1/8" x 2 1/2"
1 1/8"	1 1/4"	1 1/4" x 2 7/8"
1 1/4"	1 3/8"	1 3/8" x 3 1/8"

NOTE:
THE BOTTOM 9" OF BAR "B" SHALL BE PAINTED WITH ONE COAT OF FORMULA A-6-86 ZINC DUST OXIDE PRIMER OR, ONE COAT OF FORMULA A-11-99 PRIMER.

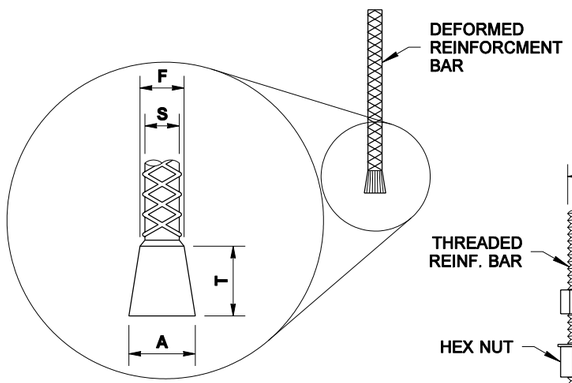

BAR "B"

WEDGE HEAD SHALL BEAR FIRMLY AND UNIFORM AGAINST BASE PLATE. BAR "B" SHALL BE HELD SECURE DURING CONCRETE PLACEMENT TO PREVENT GAPS BETWEEN WEDGE HEAD AND BASE PLATE.

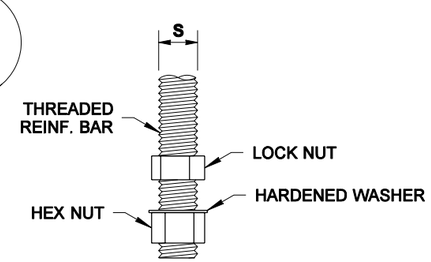

BAR "B"

THREADED BAR OPTION

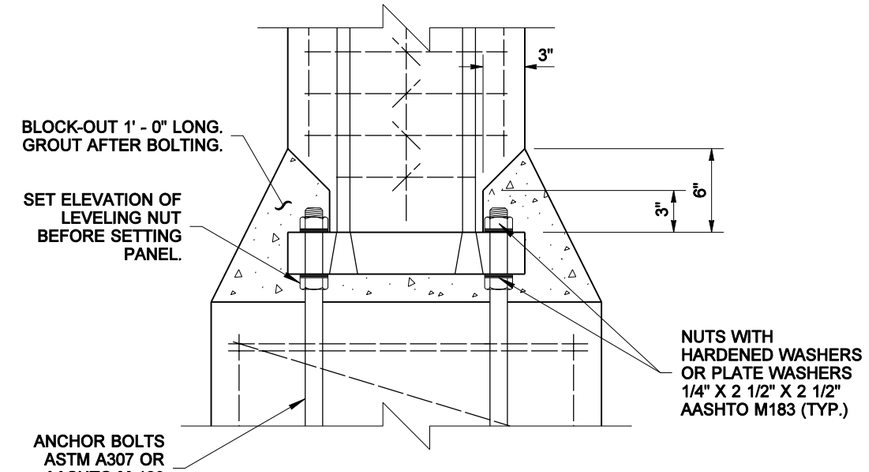

DETAIL E

ANCHOR BOLTS, NUTS, WASHERS, BASE PLATE, AND BAR "B" SHALL HAVE A PROTECTIVE COATING OF ONE OF THE FOLLOWING:
HOT DIPPED GALVANIZING AASHTO M 232 FOR HARDWARE;
AASHTO M 111 FOR WASHERS AND PLATES:
MECHANICAL GALANIZING AASHTO M 298 CL 55, OR
ZINC RICH PAINT, PAINT THREADS AND NUTS AFTER INSTALLATION.

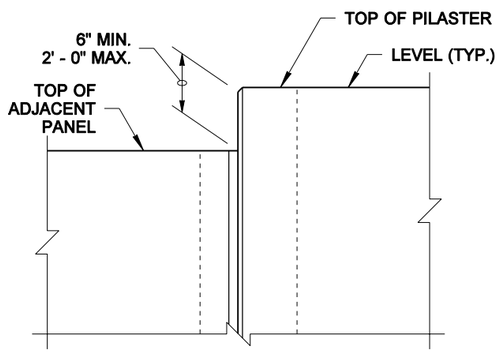

ELEVATION VIEW

STEP DETAIL

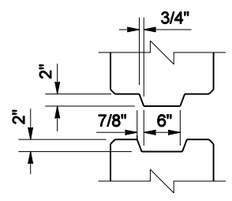

PLAN VIEW

SHEAR-KEY DETAIL

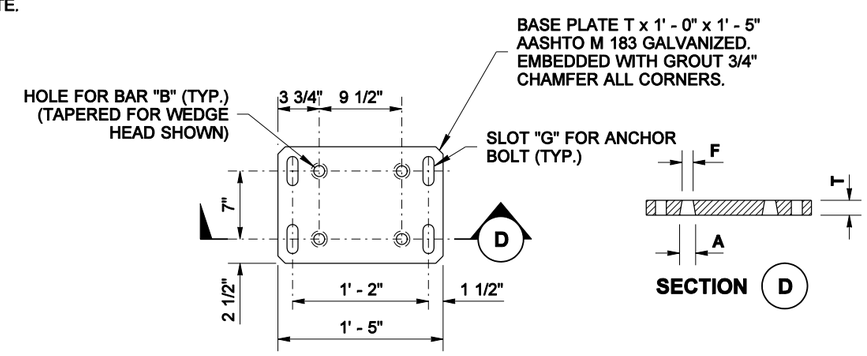

BASE PLATE DETAIL

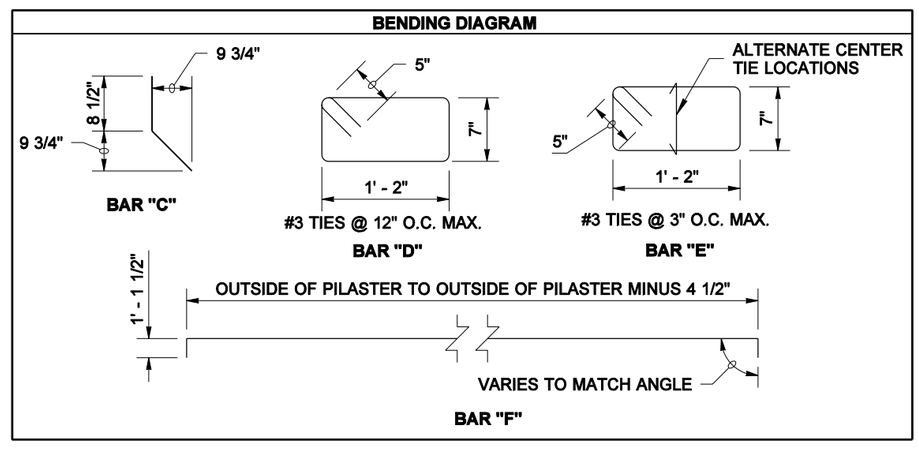

NOTE: THIS PLAN IS NOT A LEGAL ENGINEERING DOCUMENT BUT AN ELECTRONIC DUPLICATE. THE ORIGINAL, SIGNED BY THE ENGINEER AND APPROVED FOR PUBLICATION, IS KEPT ON FILE AT THE WASHINGTON STATE DEPARTMENT OF TRANSPORTATION. A COPY MAY BE OBTAINED UPON REQUEST.

PRECAST CONCRETE WALL ON SHAFT FOUNDATION

EXPIRES AUGUST 23, 2006

NOISE BARRIER WALL TYPE 11

STANDARD PLAN D-2.36-00

SHEET 2 OF 3 SHEETS

APPROVED FOR PUBLICATION

Harold J. Peterfeso — STATE DESIGN ENGINEER
11-10-05 — DATE

Washington State Department of Transportation

DRAWN BY: ADAM COCHRAN

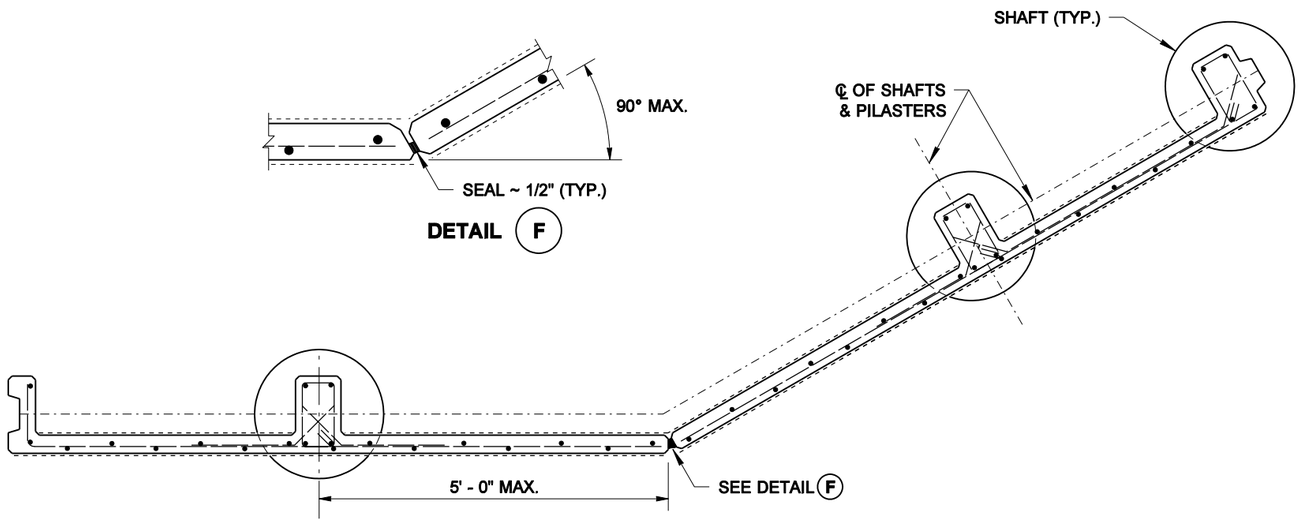

ANGLE POINT ~ CANTILEVERED

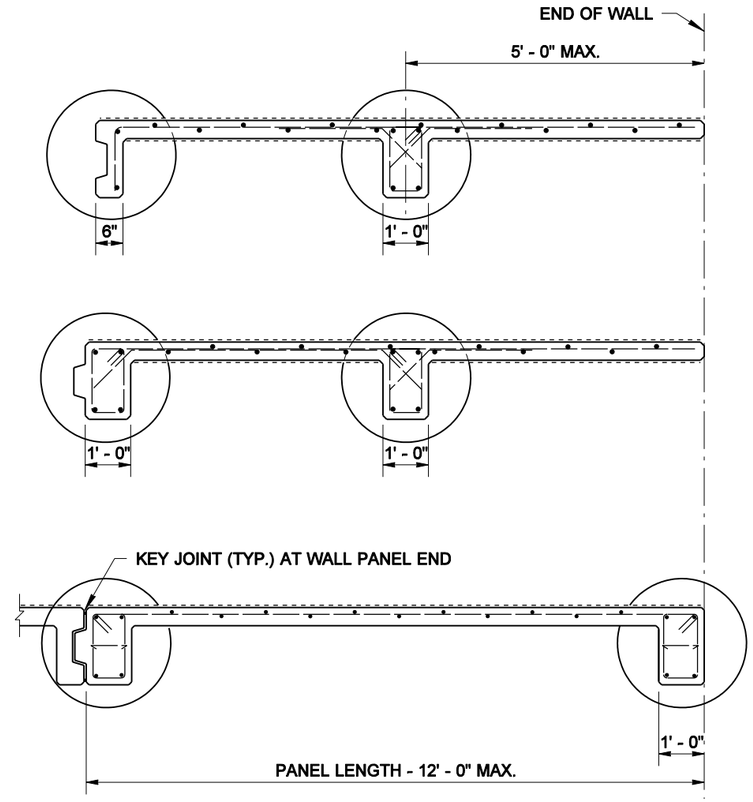

END PANEL OPTIONS

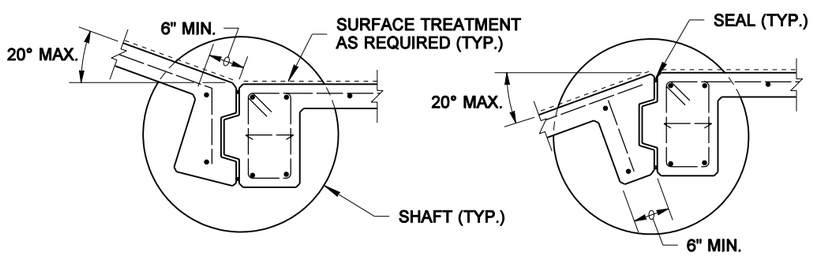

ANGLE POINT ~ ON SHAFT

ANGLE 20° OR LESS

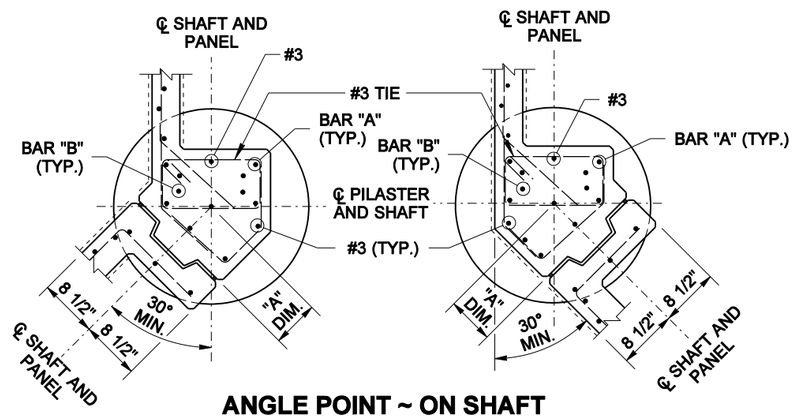

ANGLE POINT ~ ON SHAFT

ANGLE 30° TO 90°

ANGLE (DEGREE)	"A" DIMENSION
30	4 1/2"
40	5 1/2"
50	6 1/2"
60	7 1/4"
70	7 3/4"
80	8"
90	9 1/4"

PRECAST CONCRETE WALL ON SHAFT FOUNDATION

EXPIRES AUGUST 23, 2006

NOISE BARRIER WALL TYPE 11

STANDARD PLAN D-2.36-00

SHEET 3 OF 3 SHEETS

APPROVED FOR PUBLICATION

Harold J. Peterfeso — STATE DESIGN ENGINEER — *11-10-05* DATE

Washington State Department of Transportation

NOTE: THIS PLAN IS NOT A LEGAL ENGINEERING DOCUMENT BUT AN ELECTRONIC DUPLICATE. THE ORIGINAL, SIGNED BY THE ENGINEER AND APPROVED FOR PUBLICATION, IS KEPT ON FILE AT THE WASHINGTON STATE DEPARTMENT OF TRANSPORTATION. A COPY MAY BE OBTAINED UPON REQUEST.