DRAWN BY: ADAM COCHRAN

WALL HT H	TYPE 7SSA BARS "B"&"C"	TYPE 7SSB BARS "B"&"C"	TYPE 7SSC BARS "B"&"C"	TYPE 7SSD BARS "B"&"C"	WALL HT H
6' - 0"	#4 @ 15"	#4 @ 15"	#4 @ 15"	#4 @ 15"	6' - 0"
8' - 0"	#4 @ 15"	#4 @ 15"	#4 @ 15"	#4 @ 15"	8' - 0"
10' - 0"	#4 @ 15"	#4 @ 15"	#4 @ 15"	#4 @ 15"	10' - 0"
12' - 0"	#4 @ 15"	#4 @ 15"	#4 @ 15"	#4 @ 12"	12' - 0"
14' - 0"	#4 @ 15"	#4 @ 11"	#4 @ 14"	#4 @ 10"	14' - 0"
16' - 0"	#4 @ 14"	#4 @ 10"	#4 @ 10"	#5 @ 12"	16' - 0"
18' - 0"	#4 @ 12"	#5 @ 12"	#4 @ 10"	#5 @ 9"	18' - 0"

BENDING DIAGRAM

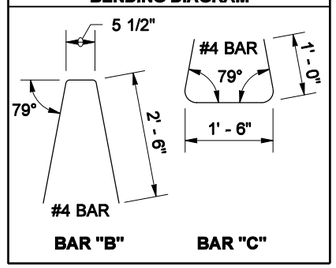

WIND EXPOSURE & VELOCITY		
NOISE BARRIER TYPE	WIND EXPOSURE	WIND VELOCITY (MPH)
7SSA	B1	80
7SSB	B1	90
7SSC	B2	80
7SSD	B2	90

SOIL TYPE	
SOIL TYPE	ANGLE OF INTERNAL FRICTION ϕ (DEGREES)
D1	32
D2	38

NOTES

1. Wall to be designated Noise Barrier Wall Type 7SSA, 7SSB, 7SSC or 7SSD. The Contract specifies actual wall designations.
2. For intermediate wall heights, use the next higher H.
3. Panels shall have at least 3 feet of level ground on each side.
4. The Contract specifies actual foundation requirements D1 or D2.

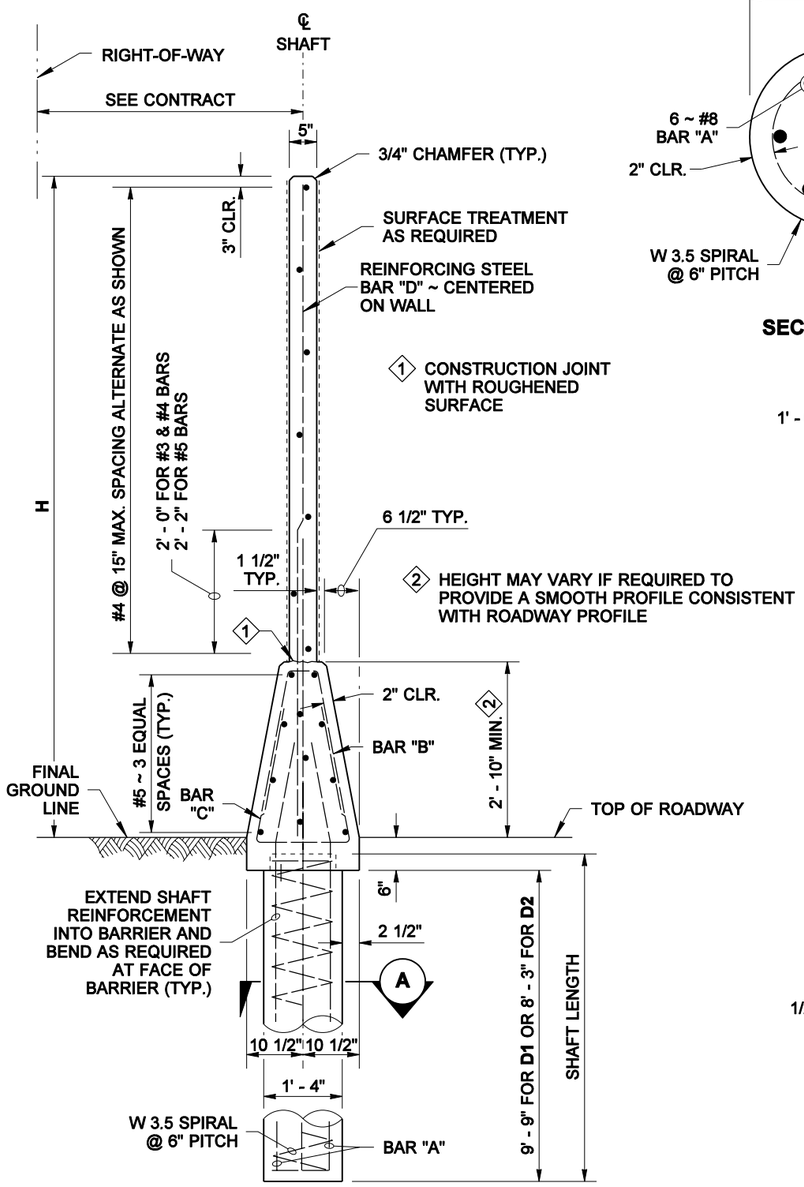

SECTION

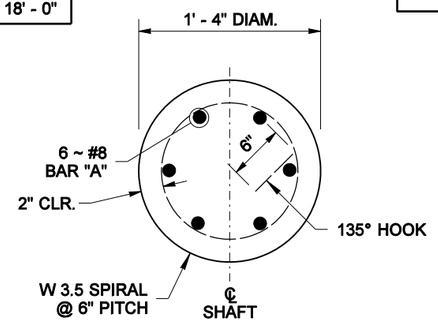

SECTION A

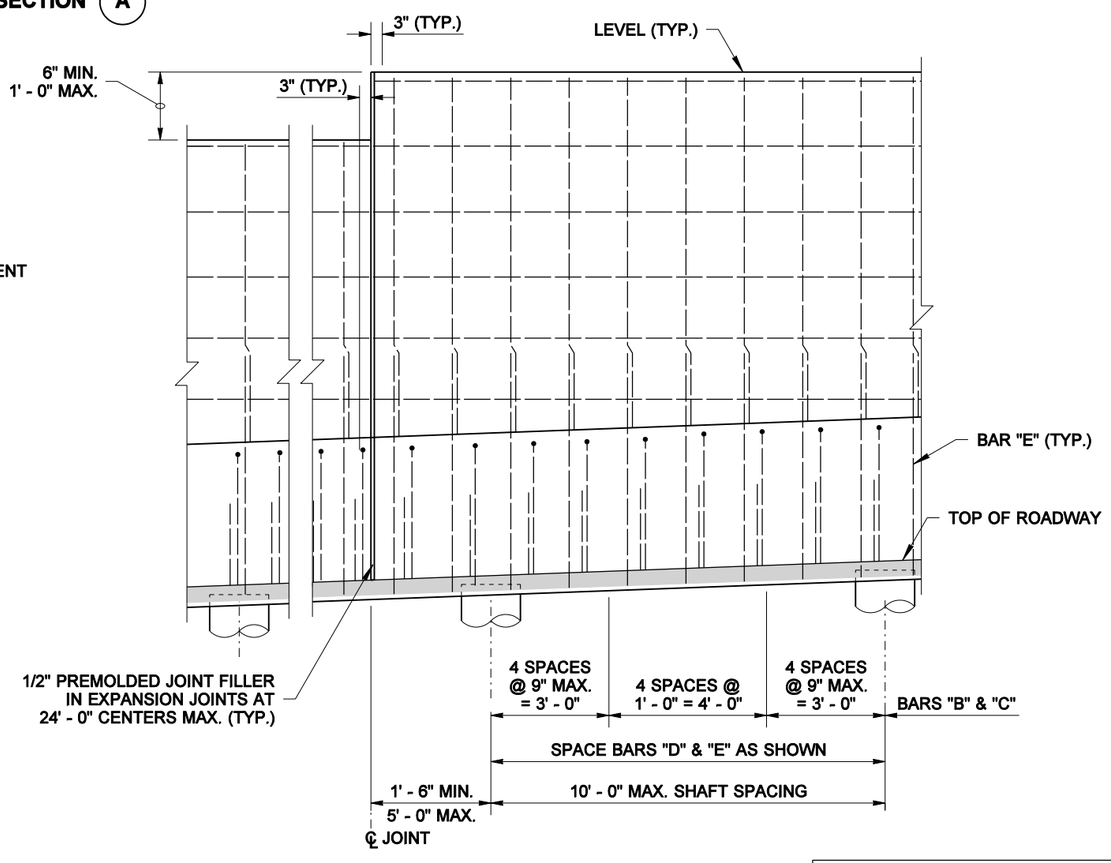

ELEVATION

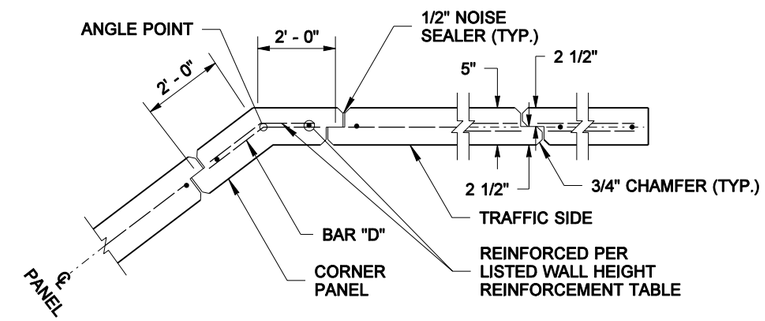

JOINT AND CORNER DETAIL

CAST-IN-PLACE CONC. WALL W/ SINGLE SLOPE TRAFFIC BARRIER ON SHAFT FOUNDATION

EXPIRES AUGUST 23, 2006

NOISE BARRIER WALL TYPE 7SS

STANDARD PLAN D-2.20-00

SHEET 1 OF 1 SHEET

APPROVED FOR PUBLICATION

Harold J. Peterfeso — STATE DESIGN ENGINEER — *11-10-05* — DATE

Washington State Department of Transportation

NOTE: THIS PLAN IS NOT A LEGAL ENGINEERING DOCUMENT BUT AN ELECTRONIC DUPLICATE. THE ORIGINAL, SIGNED BY THE ENGINEER AND APPROVED FOR PUBLICATION, IS KEPT ON FILE AT THE WASHINGTON STATE DEPARTMENT OF TRANSPORTATION. A COPY MAY BE OBTAINED UPON REQUEST.