DRAWN BY: MONIQUE GLICK

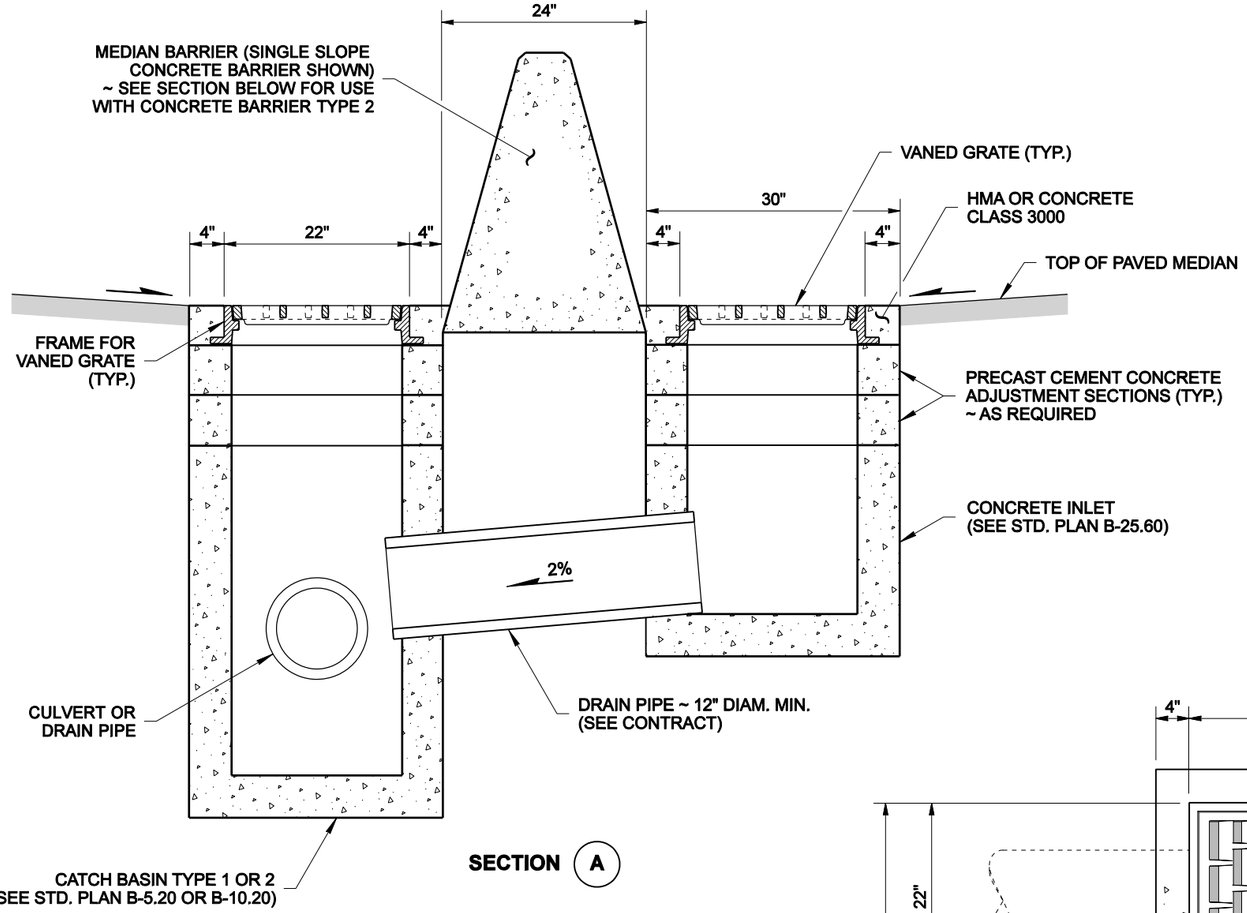

SECTION (A)

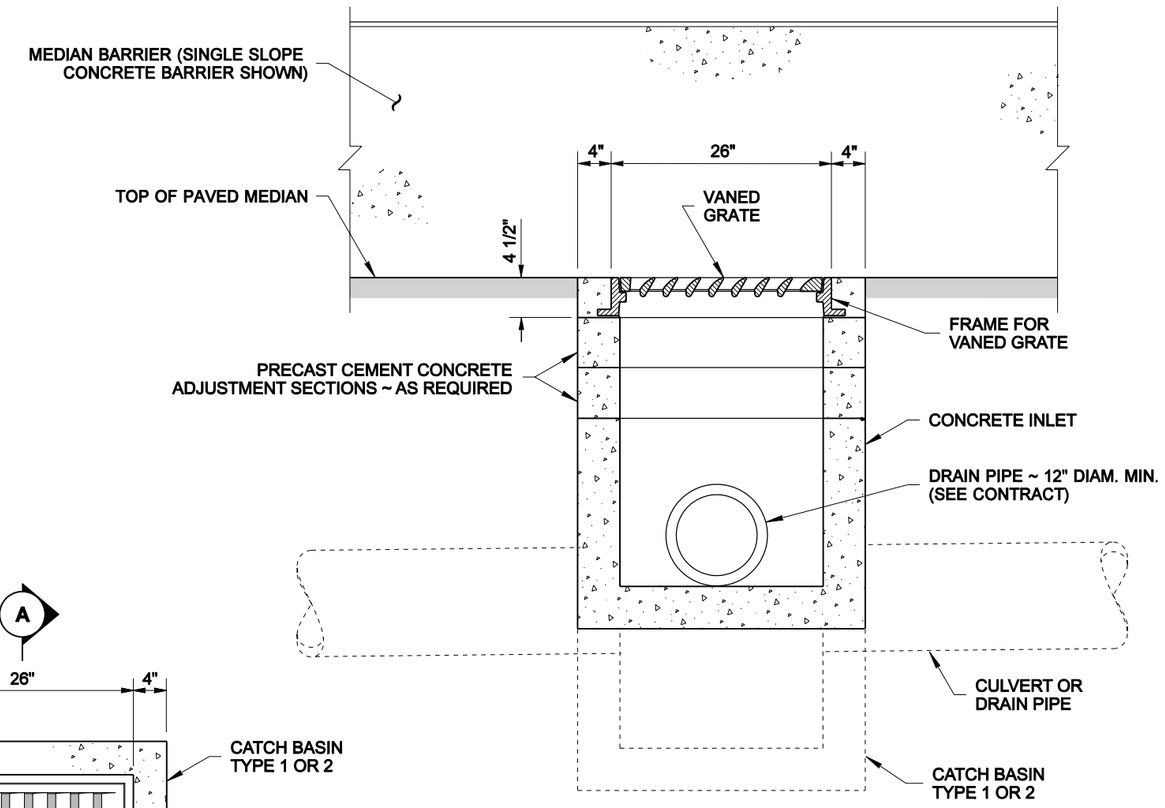

SECTION (B)

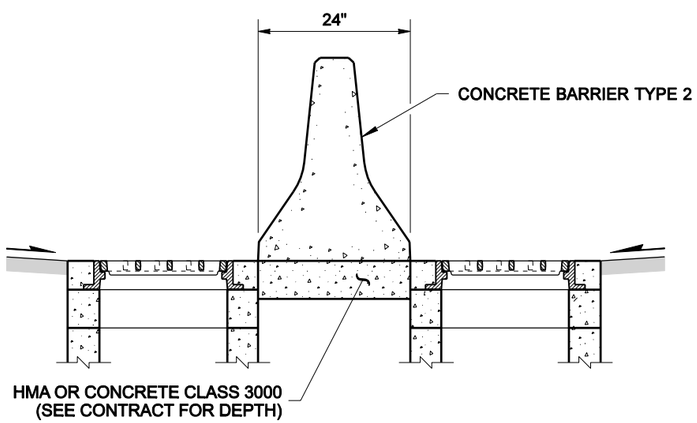

CONCRETE BARRIER TYPE 2 SECTION

SEE SECTION (A)

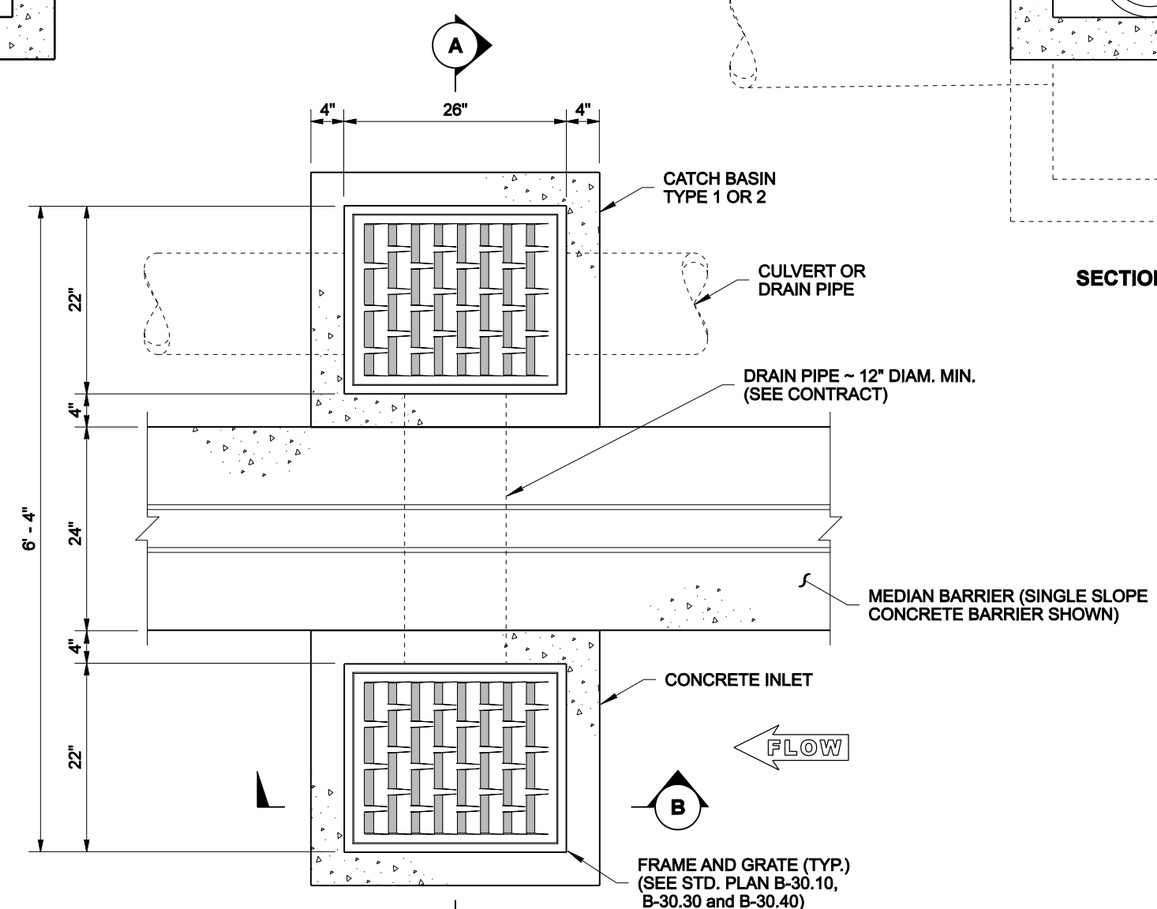

PLAN VIEW

EXPIRES JULY 1, 2007

MEDIAN BARRIER DRAINAGE INSTALLATION

STANDARD PLAN B-95.20-00

SHEET 1 OF 1 SHEET

APPROVED FOR PUBLICATION

Harold J. Peterfeso — STATE DESIGN ENGINEER

06-08-06 — DATE

Washington State Department of Transportation

NOTE: THIS PLAN IS NOT A LEGAL ENGINEERING DOCUMENT BUT AN ELECTRONIC DUPLICATE. THE ORIGINAL, SIGNED BY THE ENGINEER AND APPROVED FOR PUBLICATION, IS KEPT ON FILE AT THE WASHINGTON STATE DEPARTMENT OF TRANSPORTATION. A COPY MAY BE OBTAINED UPON REQUEST.