NOTE: THIS PLAN IS NOT A LEGAL ENGINEERING DOCUMENT BUT AN ELECTRONIC DUPLICATE. THE ORIGINAL, SIGNED BY THE ENGINEER AND APPROVED FOR PUBLICATION, IS KEPT ON FILE AT THE WASHINGTON STATE DEPARTMENT OF TRANSPORTATION. A COPY MAY BE OBTAINED UPON REQUEST.

DRAWN BY: ADAM COCHRAN

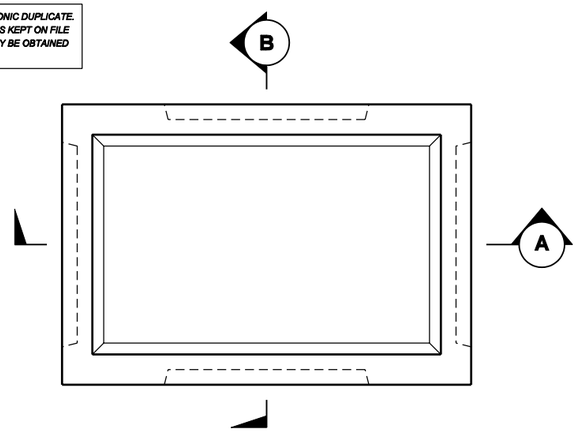

TOP VIEW

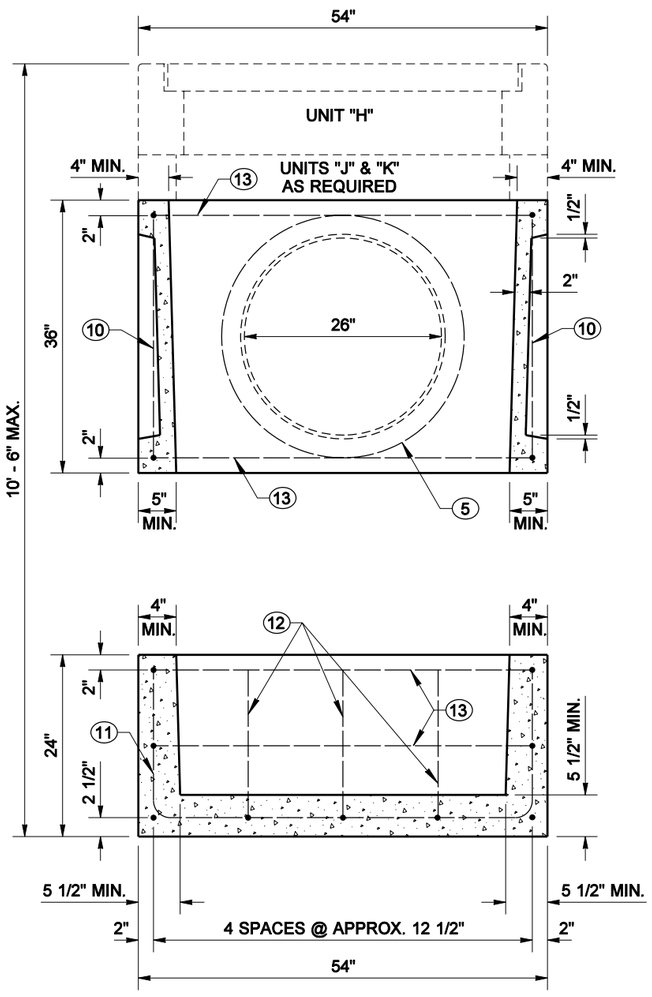

SECTION (A) TWO PIECE BASE

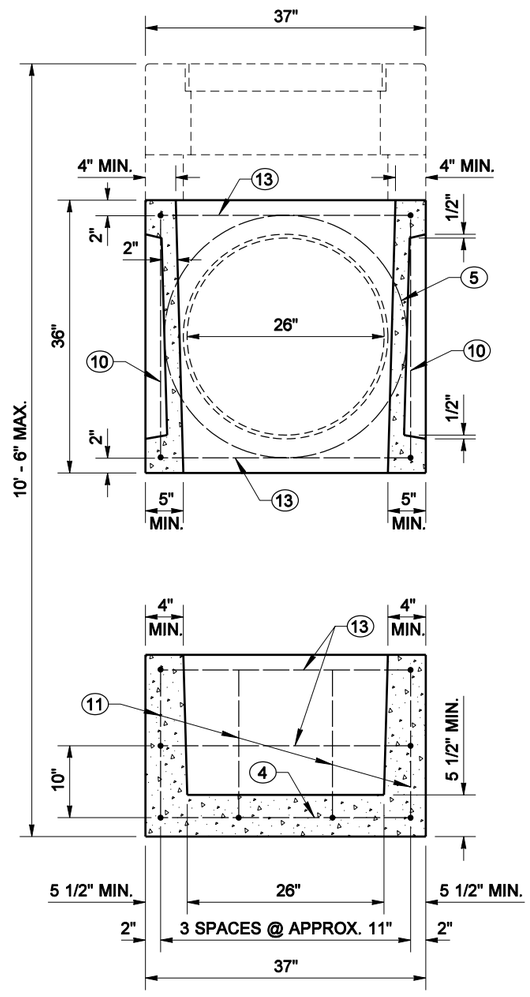

SECTION (B) TWO PIECE BASE

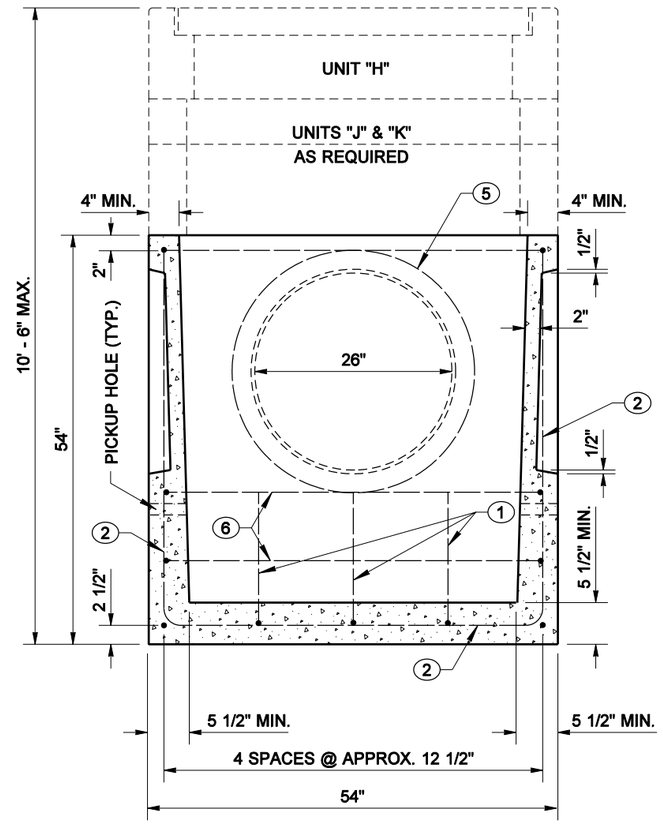

SECTION (A) ONE PIECE BASE

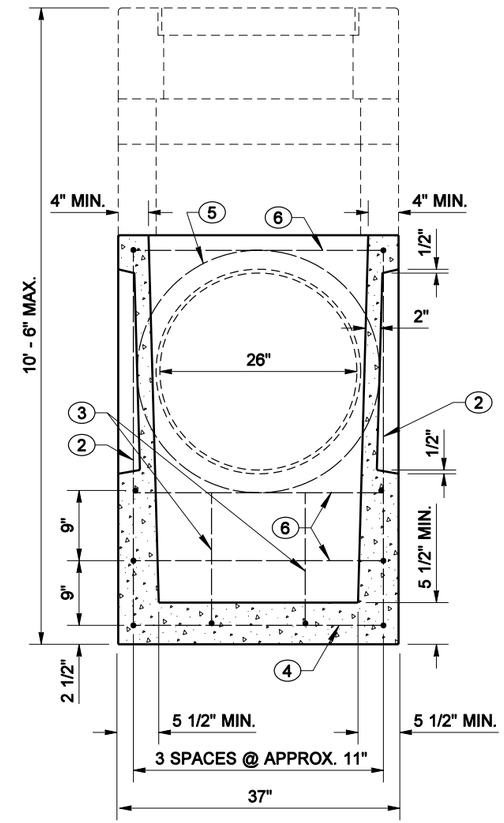

SECTION (B) ONE PIECE BASE

PIPE ALLOWANCES

PIPE MATERIAL	MAXIMUM INSIDE DIAMETER
REINFORCED OR PLAIN CONCRETE	18"
ALL METAL PIPE	21"
CPSSP * (STD. SPEC. 9-05.20)	18"
SOLID WALL PVC (STD. SPEC. 9-05.12(1))	21"
PROFILE WALL PVC (STD. SPEC. 9-05.12(2))	21"

* CORRUGATED POLYETHYLENE STORM SEWER PIPE

GRATE INLET TYPE 2

STANDARD PLAN B-35.40-00

SHEET 1 OF 2 SHEETS

APPROVED FOR PUBLICATION

Harold J. Peterfeso — STATE DESIGN ENGINEER — *06-08-06* — DATE

Washington State Department of Transportation

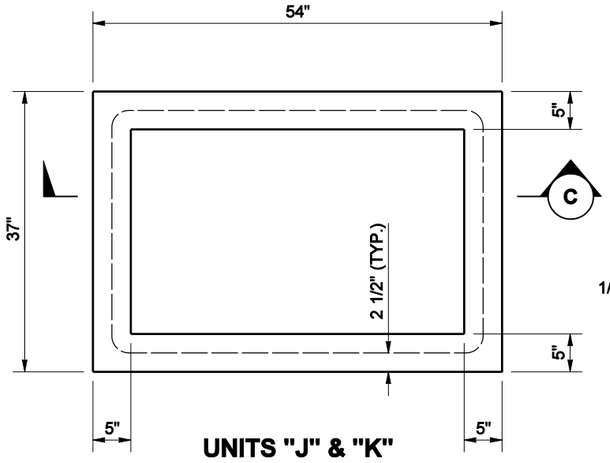

UNITS "J" & "K"

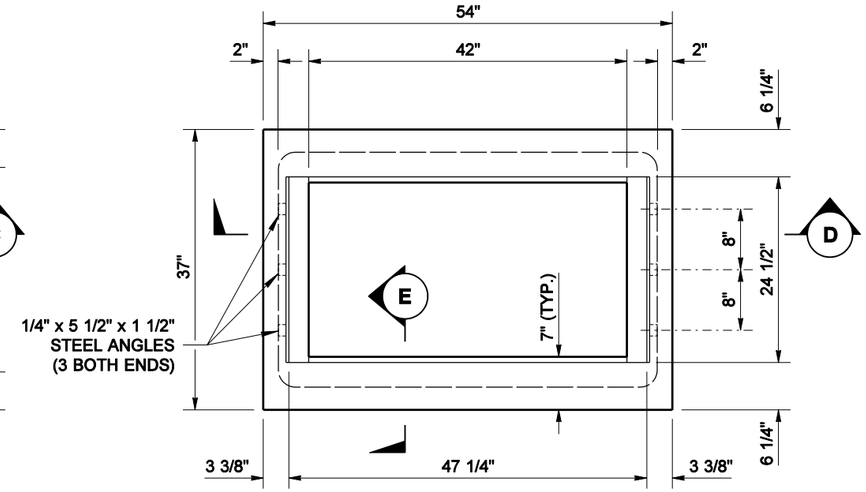

UNIT "H"

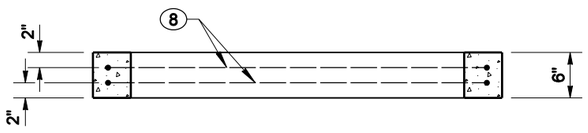

SECTION C UNIT "J"

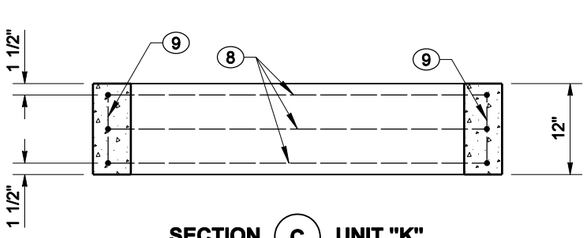

SECTION C UNIT "K"

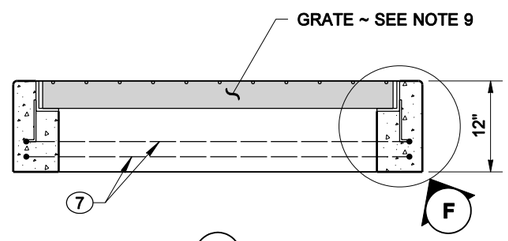

SECTION D UNIT "H"

NOTES

1. The Steel Angles shall be set so that each bearing bar of prefabricated grate shall have full bearing on both ends. The finished top of concrete shall be even with the grate surface.
2. Top of inlet grate shall be placed at ground level to present an unobstructed ditch or median section.
3. All exposed concrete edges shall be finished with a 1/2" radius.
4. Pipes may enter through the knockouts on any side at any reasonable angle, provided the outside of the pipe can be contained between two opposite walls.
5. The flow line of the outlet pipe shall be 18" minimum above the inside bottom of the inlet structure.
6. The grade line of the top inside of any inlet pipe shall enter no lower than the grade line of the top inside of the outlet pipe.
7. Unit "H" and optional extension units "J" and "K" shall be grouted in place to the satisfaction of the Engineer.
8. All pickup holes shall be grouted full after the basin has been placed.
9. See contract for type of grate specified. See Standard Plan B-40.20 and B-40.40 for grate details.

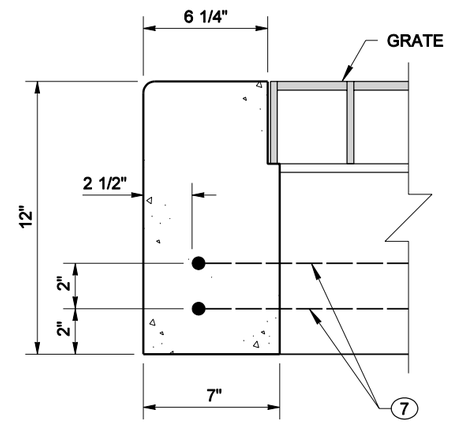

SECTION E UNIT "H"

NOTE: THIS PLAN IS NOT A LEGAL ENGINEERING DOCUMENT BUT AN ELECTRONIC DUPLICATE. THE ORIGINAL, SIGNED BY THE ENGINEER AND APPROVED FOR PUBLICATION, IS KEPT ON FILE AT THE WASHINGTON STATE DEPARTMENT OF TRANSPORTATION. A COPY MAY BE OBTAINED UPON REQUEST.

BAR LIST

MARK	LOCATION	QTY.	SIZE	LENGTH	DESCRIPTION
1	BOTTOM SLAB AND SIDE WALL	3	3	5' - 9"	
2	BOTTOM SLAB AND SIDE WALL	2		12' - 5"	
3	BOTTOM SLAB AND SIDE WALL	2		7' - 2"	
4	BOTTOM SLAB AND SIDE WALL	2		2' - 9"	STRAIGHT
5	WALL	4		9' - 1"	HOOP
6	SIDE WALL	3		14' - 6"	HOOP
7	UNIT H	2		14' - 2"	HOOP
8	UNIT J	2		14' - 2"	HOOP
8	UNIT K	3		14' - 2"	HOOP
9	UNIT K	4		0' - 9"	STRAIGHT
10	SIDE WALL	8		2' - 8"	STRAIGHT
11	BOTTOM SLAB AND SIDE WALL	4		7' - 5"	
12	BOTTOM SLAB AND SIDE WALL	3		6' - 0"	
13	SIDE WALL	4		14' - 6"	HOOP

BENDING DIAGRAM
(ALL DIMENSIONS ARE OUT TO OUT)

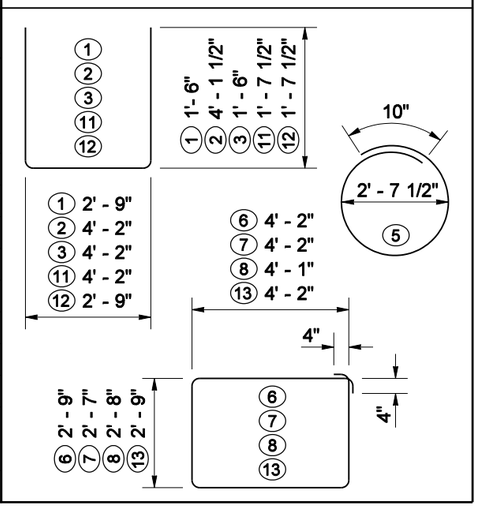

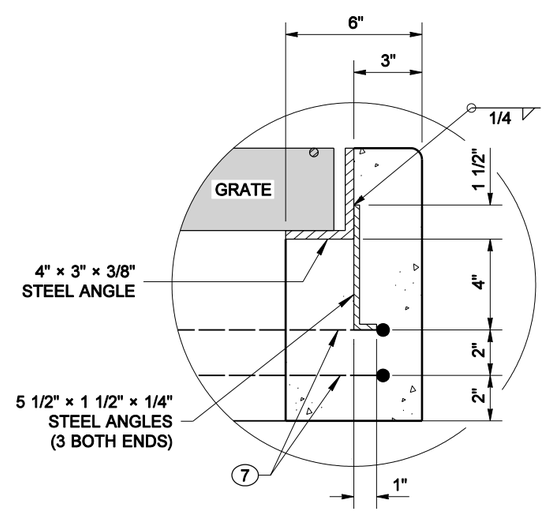

DETAIL F

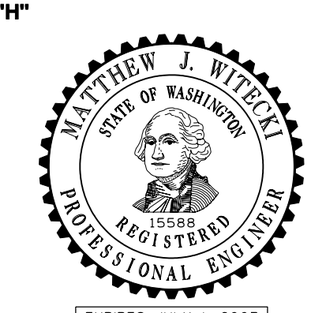

EXPIRES JULY 1, 2007

GRATE INLET TYPE 2

STANDARD PLAN B-35.40-00

SHEET 2 OF 2 SHEETS

APPROVED FOR PUBLICATION

Harold J. Peterfeso — STATE DESIGN ENGINEER

06-08-06 — DATE

Washington State Department of Transportation