NOTES

1. Precast cone sections may be eccentric or concentric.
2. Seepage port orientation varies among manufacturers.

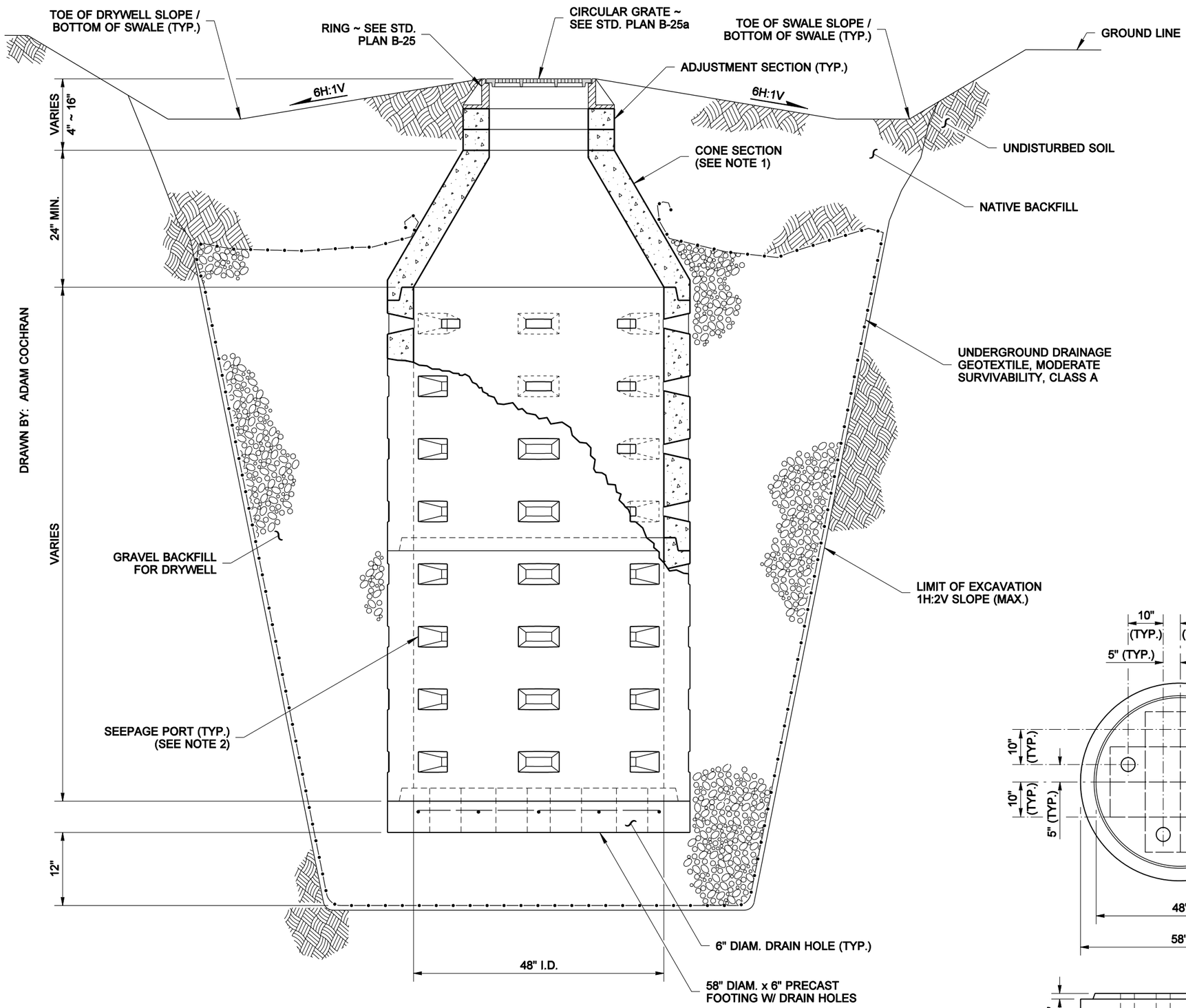

CUTAWAY ELEVATION VIEW

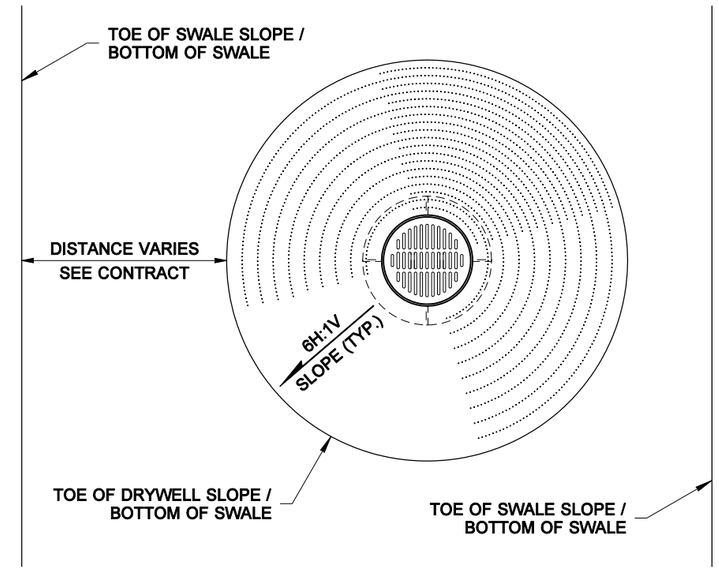

PLAN VIEW

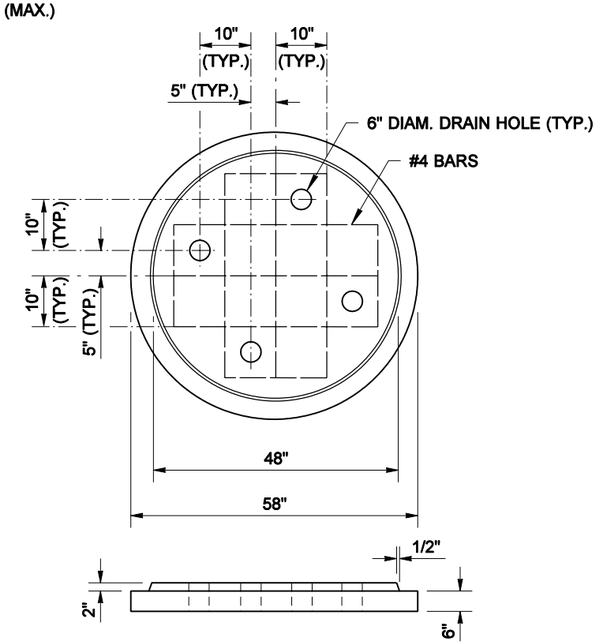

PRECAST FOOTING DETAIL

DRYWELL TYPE 1 (FOR SWALE)

STANDARD PLAN B-20.20-00

SHEET 1 OF 1 SHEET

APPROVED FOR PUBLICATION

Harold J. Peterfeso — STATE DESIGN ENGINEER — *06-01-06* — DATE

Washington State Department of Transportation

DRAWN BY: ADAM COCHRAN

NOTE: THIS PLAN IS NOT A LEGAL ENGINEERING DOCUMENT BUT AN ELECTRONIC DUPLICATE. THE ORIGINAL, SIGNED BY THE ENGINEER AND APPROVED FOR PUBLICATION, IS KEPT ON FILE AT THE WASHINGTON STATE DEPARTMENT OF TRANSPORTATION. A COPY MAY BE OBTAINED UPON REQUEST.