Contents

			Date
Division 1	**General Information**		
	100	Manual Description	September 1992
		100.01 Purpose	
		100.02 Revisions	
	110	Nomenclature and References	October 1993
		110.01 Abbreviations	
		110.02 References	
	120	Systems Planning	June 1989
		120.01 General	
		120.02 Statewide Transportation Planning	
		120.03 Metropolitan Area Transportation Planning	
		120.04 Designation of Highway Routes	
		120.05 State Programs for Local Roads and Streets	
	130	Systems Data and Services	June 1989
		130.01 Highway Performance Monitoring System	
		130.02 Travel Data and Traffic Analysis	
		130.03 Videologging	
		130.04 Photogrammetry Services	
	140	Program Development and Federal Aid Financing	June 1989
		140.01 General	
		140.02 Federal Aid Financing	
	160	General	June 1989
		160.01 Design Principles	
		160.02 Design Standards	
		160.03 Design Items	
Division 2	**Hearings, Environmental, and Permits**		
	210	Public Involvement and Hearings	December 1998
		210.01 General	
		210.02 Definitions	
		210.03 References	
		210.04 Public Involvement	
		210.05 Hearings	
		210.06 Environmental Hearing	
		210.07 Corridor Hearing	
		210.08 Design Hearing	
		210.09 Access Hearing	
		210.10 Combined Hearings	
		210.11 Administrative Appeal Hearing	
		210.12 Documentation	

Date

220 Project Environmental Documentation June 1989
220.01 General
220.02 Definitions
220.03 Project Classification
220.04 Class I, EIS
220.05 Class II, CE
220.06 Class III, EA/Checklist
220.07 Project Reevaluation
220.08 Project Reviews

240 Permits and Approvals From Other Governmental Agencies September 1990
240.01 General (240-13 and 14 June 1989)
240.02 United States Department of the Army-Corps of Engineers
240.03 United States Coast Guard
240.04 United States Forest Service
240.05 Federal Aviation Administration
240.06 FHWA — Western Federal Lands Highway Division
240.07 Federal Energy Regulatory Commission
240.08 Environmental Protection Agency
240.09 Washington State Departments of Fisheries and Wildlife
240.10 Washington State Department of Ecology
240.11 Washington State Department of Natural Resources
240.12 Washington State Department of Labor and Industries
240.13 Local Agencies
240.14 Utility Agreements

Division 3 Project Documentation

310 Preliminary Studies June 1989
310.01 General
310.02 Legislative Studies
310.03 Route/Design Studies

315 Value Engineering August 1998
315.01 General
315.02 References
315.03 Definitions
315.04 Procedures
315.05 Documentation

325 Design Matrix Procedures June 1999
325.01 General (325-3 through 11 August 1998)
325.02 Terminology (325-14 August 1998)
325.03 Design Matrix Procedures
325.04 Selecting a Design Matrix
325.05 Project Type
325.06 Using a Design Matrix

Date

330 Design Documentation, Approval, and Process Review June 1999
330.01 General (330-1 November 1999)
330.02 References (330-2 through 9 June 1999)
330.03 Purpose (330-10 through 17 August 1998)
330.04 Project Development
330.05 Project Definition Phase
330.06 Design Documentation
330.07 Design Approval
330.08 Process Review

Division 4 Project Design Criteria

410 Basic Design Level August 1998
410.01 General
410.02 Required Safety Items of Work
410.03 Minor Safety and Minor Preservation Work

430 Modified Design Level November 1997
430.01 General (430-1 through 3 November 1999)
430.02 Design Speed (430-4 and 5 December 1998)
430.03 Roadway Widths (430-7 April 1998)
430.04 Ramp Lane Widths (430-11 August 1998)
430.05 Stopping Sight Distance
430.06 Profile Grades
430.07 Cross Slope
430.08 Fill Slopes and Ditch Inslopes
430.09 Intersections
430.10 Structures

440 Full Design Level December 1998
440.01 General (440-9 and 10 November 1999)
440.02 References
440.03 Definitions
440.04 Functional Classification
440.05 Terrain Classification
440.06 Geometric Design Data
440.07 Design Speed
440.08 Traffic Lanes
440.09 Shoulders
440.10 Medians
440.11 Parking
440.12 Pavement Type
440.13 Structure Width
440.14 Grades

Date

Division 5 Soils and Paving

510 Investigation of Soils and Surfacing Materials November 1999
- 510.01 General
- 510.02 References
- 510.03 Materials Sources
- 510.04 Geotechnical Investigation, Design, and Reporting
- 510.05 Use of Geotechnical Consultants
- 510.06 Geotechnical Work by Others
- 510.07 Surfacing Report
- 510.08 Documentation

520 Design of Pavement Structure April 1998
- 520.01 Introduction (520-2 and 3 November 1999)
- 520.02 Estimating Tables

530 Geosynthetics April 1998
- 530.01 General (530-13 November 1999)
- 530.02 References
- 530.03 Geosynthetic Type and Characteristics
- 530.04 Geosynthetic Function Definitions and Applications
- 530.05 Design Approach for Geosynthetics
- 530.06 Design Responsibility
- 530.07 Documentation

Division 6 Geometrics

610 Highway Capacity June 1989
- 610.01 General
- 610.02 Definitions and Symbols
- 610.03 Design

620 Geometric Plan Elements April 1998
- 620.01 General (620-1 and 4 November 1999)
- 620.02 References
- 620.03 Definitions
- 620.04 Horizontal Alignment
- 620.05 Distribution Facilities
- 620.06 Number of Lanes and Arrangement
- 620.07 Pavement Transitions
- 620.08 Documentation

630 Geometric Profile Elements April 1998
- 630.01 General
- 630.02 References
- 630.03 Vertical Alignment
- 630.04 Coordination of Vertical and Horizontal Alignments
- 630.05 Airport Clearance
- 630.06 Railroad Crossings
- 630.07 Procedures
- 630.08 Documentation

Date

640 Geometric Cross Section — December 1998
- 640.01 General — (640-3, 22, 28, 29, 31, and 32 June 1999)
- 640.02 References — (640-30, 33, and 34 November 1999)
- 640.03 Definitions
- 640.04 Roadways
- 640.05 Superelevation
- 640.06 Median and Outer Separations
- 640.07 Roadsides
- 640.08 Roadway Sections
- 640.09 Documentation

650 Sight Distance — April 1998
- 650.01 General — (650-3 June 1999)
- 650.02 References — (650-4 November 1999)
- 650.03 Definitions — (650-8 and 9 August 1998)
- 650.04 Passing Sight Distance
- 650.05 Stopping Sight Distance
- 650.06 Decision Sight Distance

Division 7 Roadside Safety Elements

700 Roadside Safety — August 1997
- 700.01 General — (700-3 April 1998)
- 700.02 References — (700-8 June 1999)
- 700.03 Definitions
- 700.04 Clear Zone
- 700.05 Hazards to be Considered for Mitigation
- 700.06 Median Considerations
- 700.07 Other Roadside Safety Features
- 700.08 Documentation

710 Traffic Barriers — November 1997
- 710.01 General — (710-2 August 1998)
- 710.02 References — (710-4 through 6, 17, and 19 December 1998)
- 710.03 Definitions — (710-7 November 1999)
- 710.04 Project Requirements — (710-9 and 710-21 April 1998)
- 710.05 Barrier Design
- 710.06 Beam Guardrail
- 710.07 Cable Barrier
- 710.08 Concrete Barrier
- 710.09 Redirectional Land Forms
- 710.10 Bridge Rails
- 710.11 Other Barriers
- 710.12 Documentation

720 Impact Attenuator Systems — June 1999
- 720.01 Impact Attenuator Systems
- 720.02 Design Criteria
- 720.03 Selection
- 720.04 Documentation

Date

Division 8 Traffic Safety Elements

810	Construction Work Zone Traffic Control Strategy		December 1994
	810.01	General	
	810.02	References	
	810.03	Definitions	
	810.04	Construction Work Zone Traffic Control Strategy	
	810.05	Procedures	
820	Signing		November 1999
	820.01	General	
	820.02	References	
	820.03	Design Components	
	820.04	Overhead Installation	
	820.05	Mileposts	
	820.06	Guide Sign Plan	
	820.07	Documentation	
830	Delineation		September 1992
	830.01	General	(830-5 through 7 March 1994)
	830.02	Pavement Marking	
	830.03	Raised Pavement Markers	
	830.04	Guideposts	
	830.05	Barrier Delineation	
	830.06	Wildlife Warning Reflectors	
	830.07	Procedure	
840	Illumination		March 1991
	840.01	General	(840-5 and 6 June 1989)
	840.02	References	(840-4 and 7 March 1994)
	840.03	Definitions	
	840.04	Approval Requirements	
	840.05	Warrants	
	840.06	Design Report	
850	Traffic Control Signals		June 1989
	850.01	General	(850-1 September 1990)
	850.02	Policy	(850-13, 16 through 21, 29 through 38 March 1994)
	850.03	Approval Requirements	
	850.04	Signal Design	
	850.05	Contract Preparation	
860	Intelligent Transportation Systems		November 1999
	860.01	General	
	860.02	References	
	860.03	Traffic Data Collection	
	860.04	Traffic Flow Control	
	860.05	Motorist Information	
	860.06	Documentation	

Date

Division 9 Interchanges and Intersections

910	Intersections at Grade		August 1997
910.01	General	(910-1 through 3	August 1998)
910.02	References	(910-17 through 19	November 1999)
910.03	Definitions	(910-21 through 24	November 1999)
910.04	Design Considerations	(910-21 and 25	April 1998)
910.05	Design Vehicle	(910-26	December 1998)
910.06	Right-Turn Corners	(910-33, 34, and 36	November 1999)
910.07	Channelization		
910.08	Roundabouts		
910.09	U-Turns		
910.10	Sight Distance at Intersections		
910.11	Traffic Control at Intersections		
910.12	Interchange Ramp Terminals		
910.13	Procedures		
910.14	Documentation		
920	Road Approaches		April 1998
920.01	General	(920-5, 6, 8, and 9	November 1999)
920.02	References		
920.03	Definitions		
920.04	Design Considerations		
920.05	Road Approach Connection Category		
920.06	Road Approach Design Template		
920.07	Sight Distance		
920.08	Road Approach Spacing and Corner Clearance		
920.09	Drainage Requirements		
920.10	Procedures		
920.11	Documentation		
930	Railroad Grade Crossings		June 1989
930.01	General	(930-4, 6 through 12	March 1994)
930.02	References		
930.03	Plans		
930.04	Traffic Control Systems		
930.05	Stopping Lanes		
930.06	Types of Crossing Surfaces		
930.07	Crossing Closure		
930.08	Traffic Controls During Construction and Maintenance		
930.09	Railroad Grade Crossing Orders		
930.10	Longitudinal Easements From Railroad		

				Date
940	Traffic Interchanges			June 1999
	940-01	General	(940-5, 10, 17 through 20	November 1999)
	940.02	References	(940-23 through 27, and 29	November 1999)
	940.03	Definitions		
	940.04	Interchange Design		
	940.05	Ramps		
	940.06	Interchange Connections		
	940.07	Ramp Terminal Intersection at Crossroads		
	940.08	Interchanges on Two-Lane Highways		
	940.09	Interchange Plans		
	940.10	Documentation		
960	Median Crossovers			August 1997
	960.01	General		
	960.02	Analysis		
	960.03	Design		
	960.04	Approval		
	960.05	Documentation		

Division 10 Auxiliary Facilities

1010	Auxiliary Lanes			November 1999
	1010.01	General		
	1010.02	References		
	1010.03	Definitions		
	1010.04	Climbing Lanes		
	1010.05	Passing Lanes		
	1010.06	Slow Moving Vehicle Turnouts		
	1010.07	Shoulder Driving for Slow Vehicles		
	1010.08	Emergency Escape Ramps		
	1010.09	Chain-Up Areas		
	1010.10	Documentation		
1020	Facilities for Nonmotorized Transportation			June 1989
	1020.01	General	(1020-6	March 1991)
	1020.02	Definitions	(1020-9 and 10	October 1995)
	1020.03	Bicycle Facilities	(1020-11 through 19	March 1994)
	1020.04	Pedestrian Facilities (Walkways)	(1020-21 through 40	March 1994)
	1020.05	Equestrian and Watercraft Facilities		
1030	Safety Rest Areas and Travel Services			June 1999
	1030.01	General	(1030-3 through 5	November 1999)
	1030.02	References		
	1030.03	Documentation		

			Date
1040	Weigh Stations		June 1989
	1040.01	General	(1040-3 through 14 March 1994)
	1040.02	Planning and Development	
	1040.03	Permanent Facilities	
	1040.04	Portable Facilities	
	1040.05	Agency Responsibilities	
	1040.06	Design Report	
	1040.07	Federal Aid Participation	
1050	High Occupancy Vehicle Priority Treatment		June 1995
	1050.01	General	
	1050.02	Definitions	
	1050.03	References	
	1050.04	Preliminary Design and Planning	
	1050.05	HOV Operations	
	1050.06	Design Criteria	
	1050.07	Arterial HOV	
1060	Transit Benefit Facilities		December 1991
	1060.01	Introduction	(1060-14 March 1994)
	1060.02	Definitions	(1060-16 through 22 March 1994)
			(1060-19 November 1997)
	1060.03	Park and Ride Lots	(1060-23 and 24 July 1994)
	1060.04	Transfer/Transit Centers	(1060-25 through 34 March 1994)
	1060.05	Bus Stop and Pullouts	(1060-35 and 36 July 1994)
	1060.06	Passenger Amenities	(1060-37 and 38 March 1994)
	1060.07	Roadway and Vehicle Design Criteria Characteristics	
	1060.08	Intersection Radii	
	1060.09	Disabled Accessibility	
	1060.10	References	

Division 11 Structures

1110	Site Data for Structures		April 1998
	1110.01	General	(1110-3 through 5 November 1999)
	1110.02	References	
	1110.03	Required Data for All Structures	
	1110.04	Additional Data for Waterway Crossings	
	1110.05	Additional Data for Grade Separations	
	1110.06	Additional Data for Widenings	
	1110.07	Documentation	
1120	Bridges		December 1998
	1120.01	General	
	1120.02	References	
	1120.03	Bridge Location	
	1120.04	Bridge Site Design Elements	
	1120.05	Documentation	

			Date
1130	Retaining Walls		December 1998
	1130.01	References	(1130-1 November 1999)
	1130.02	General	(1130-12 November 1999)
	1130.03	Design Principles	
	1130.04	Design Requirements	
	1130.05	Guidelines for Wall/Slope Selection	
	1130.06	Design Responsibility and Process	
	1130.07	Documentation	
1140	Noise Barriers		December 1998
	1140.01	General	
	1140.02	References	
	1140.03	Design	
	1140.04	Procedures	
	1140.05	Documentation	

Division 12 Hydraulics

1210	Hydraulic Design		December 1998
	1210.01	General	
	1210.02	References	
	1210.03	Hydraulic Considerations	
	1210.04	Safety Considerations	
	1210.05	Design Responsibility	

Division 13 Roadside Development

1300	Roadside Development and Highway Beautification		June 1999
	1300.01	General	
	1300.02	References	
	1300.03	Roadside Classification Plan	
	1300.04	Roadside Manual	
	1300.05	Design Requirements	
	1300.06	Documentation	
	1300.07	Design Recommendations	
1310	Contour Grading		June 1999
	1310.01	General	
	1310.02	References	
	1310.03	Procedures	
	1310.04	Recommendations	
1320	Vegetation		June 1999
	1320.01	General	
	1320.02	References	
	1320.03	Discussion	
	1320.04	Recommendations	
	1320.05	Design Guidelines	
	1320.06	Documentation	

Date

1330 Irrigation June 1999
1330.01 General
1330.02 References
1330.03 Design Considerations

1350 Soil Bioengineering August 1997
1350.01 General
1350.02 References
1350.03 Uses
1350.04 Design Responsibilities and Considerations
1350.05 Documentation

Division 14 Right of Way and Access Control

1410 Right of Way Considerations June 1999
1410.01 General
1410.02 References
1410.03 Special Features
1410.04 Easement and Permit
1410.05 Programming for Funds
1410.06 Appraisal and Acquisition
1410.07 Transactions
1410.08 Documentation

1420 Access Control Design Policy June 1989
1420.01 General (1420-4 March 1994)
1420.02 Full Access Control Criteria (1420-11 through 21 March 1994)
1420.03 Partial Access Control Criteria
1420.04 Modified Access Control Criteria
1420.05 Access Approaches
1420.06 Approaches Between Limited Access Highways and Adjacent Railroads
1420.07 Frontage Roads
1420.08 Multiple Use of Right of Way for Nonhighway Purposes
1420.09 Modifications to Established Limited Access Plans

1425 Access Point Decision Report April 1998
1425.01 General
1425.02 Access Point Decision Report and Supporting Analyses
1425.03 Procedures
1425.04 Documentation

1430 Development of Access Control June 1989
1430.01 General
1430.02 Access Report
1430.03 Access Hearing

		Date
1440	Surveying and Mapping	June 1999
	1440.01 General	
	1440.02 References	
	1440.03 Procedures	
	1440.04 Datums	
	1440.05 Global Positioning System	
	1440.06 WSDOT Monument Database	
	1440.07 Geographic Information System	
	1440.08 Photogrammetric Surveys	
	1440.09 Documentation	
1450	Monumentation	October 1995
	1450.01 General	
	1450.02 References	
	1450.03 Definitions	
	1450.04 Control Monuments	
	1450.05 Alignment	
	1450.06 Property Corners	
	1450.07 Other Monuments	
	1450.08 Documentation	
	1450.09 Filing Requirements	
1460	Fencing	June 1999
	1460.01 General	
	1460.02 References	
	1460.03 Design Criteria	
	1460.04 Fencing Types	
	1460.05 Gates	
	1460.06 Procedure	
	1460.07 Documentation	

Index November 1999

Figures

Figure Number	Title	Page	Last Date
210-1	Sequence for a Hearing	210-16	December 1998
220-1	Environmental Process Flow Chart	220-14	June 1989
240-1a	Permits and Approvals	240-11	September 1990
240-1b	Permits and Approvals	240-12	September 1990
240-2	FAA Notice Requirement Related to Highways	240-13	June 1989
240-3	DNR Area Management Units	240-14	June 1989
310-1	Legislative Study Cost Estimate	310-6	June 1989
310-2	Legislative Study Report Cover	310-7	June 1989
310-3	Legislative Study Report Title Page	310-8	June 1989
315-1	Eight-Phase Job Plan for VE Studies	315-5	August 1998
315-2	Request for Value Engineering Study	315-6	August 1998
315-3	VE Study Team Tools	315-7	August 1998
325-1	Design Matrix Selection Guide	325-4	August 1998
325-2a	NHS Highways in Washington	325-6	August 1998
325-2b	NHS Highways in Washington (continued)	325-7	August 1998
325-3a	Preservation Program	325-8	August 1998
325-3b	Improvement Program	325-9	August 1998
325-3c	Improvement Program (continued)	325-10	August 1998
325-4	Design Matrix 1 — Interstate Routes (Main Line)	325-11	August 1998
325-5	Design Matrix 2 — Interstate Interchange Areas	325-12	June 1999
325-6	Design Matrix 3 — NHS Routes (Main Line)	325-13	June 1999
325-7	Design Matrix 4 — Non-Interstate Interchange Areas	325-14	August 1998
325-8	Design Matrix 5 — Non-NHS Routes	325-15	June 1999
330-1	Design Approval Level	330-6	June 1999
330-2	Reviews and Approvals	330-7	June 1999
330-3a	Reviews and Approvals, Design	330-8	June 1999
330-3b	Reviews and Approvals, Design (continued)	330-9	June 1999
330-4	PS&E Process Approvals	330-10	August 1998
330-5a	Sample Project Analysis	330-11	August 1998
330-5b	Sample Project Analysis	330-12	August 1998
330-6	Sample Evaluate Upgrade (EU)	330-13	August 1998

Figure Number	Title	Page	Last Date
330-7a	Sample Deviation, Rural	330-14	August 1998
330-7b	Sample Deviation, Rural	330-15	August 1998
330-8a	Sample Deviation, Urban	330-16	August 1998
330-8b	Sample Deviation, Urban	330-17	August 1998
430-1	Turning Ramp Lane Widths Modified Design Level	430-1	November 1999
430-2	Design Vehicles Modified Design Level	430-3	November 1999
430-3	Modified Design Level for Multilane Highways and Bridges	430-4	December 1998
430-4	Modified Design Level for Two-Lane Highways and Bridges	430-5	December 1998
430-5	Minimum Total Roadway Widths for Two-Lane Highway Curves	430-6	November 1997
430-6	Minimum Total Roadway Widths for Two-Lane Highway Curves, $\Delta<90^\circ$ — Modified Design Level	430-7	April 1998
430-7	Evaluation for Stopping Sight Distance for Crest Vertical Curves — Modified Design Level	430-8	November 1997
430-8	Evaluation for Stopping Sight Distance for Horizontal Curves — Modified Design Level	430-9	November 1997
430-9	Main Line Roadway Sections — Modified Design Level	430-10	November 1997
430-10	Ramp Roadway Sections — Modified Design Level	430-11	August 1998
440-1	Desirable Design Speed	440-4	December 1998
440-2	Minimum Shoulder Width	440-5	December 1998
440-3	Geometric Design Data, Interstate	440-7	December 1998
440-4a	Geometric Design Data, Principle Arterial	440-8	December 1998
440-4b	Geometric Design Data, Principle Arterial	440-9	November 1999
440-5a	Geometric Design Data, Minor Arterial	440-10	November 1999
440-5b	Geometric Design Data, Minor Arterial	440-11	December 1998
440-6a	Geometric Design Data, Collector	440-12	December 1998
440-6b	Geometric Design Data, Collector	440-13	December 1998
510-1	Material Source Development Plan	510-16	November 1999
520-1	Estimating — Miscellaneous Tables	520-2	November 1999
520-2a	Estimating — Asphalt Concrete Pavement and Asphalt Distribution Tables	520-3	November 1999
520-2b	Estimating — Asphalt Concrete Pavement and Asphalt Distribution Tables	520-4	April 1998
520-3	Estimating — Bituminous Surface Treatment	520-5	April 1998
520-4	Estimating — Base and Surfacing Typical Section Formulae and Example	520-6	April 1998
520-5a	Estimating — Base and Surfacing Quantities	520-7	April 1998
520-5b	Estimating — Base and Surfacing Quantities	520-8	April 1998
520-5c	Estimating — Base and Surfacing Quantities	520-9	April 1998
520-5d	Estimating — Base and Surfacing Quantities	520-10	April 1998
520-5e	Estimating — Base and Surfacing Quantities	520-11	April 1998
520-5f	Estimating — Base and Surfacing Quantities	520-12	April 1998
520-5g	Estimating — Base and Surfacing Quantities	520-13	April 1998
520-5h	Estimating — Base and Surfacing Quantities	520-14	April 1998

Figure Number	Title	Page	Last Date
530-1	Selection Criteria for Geotextile Class	530-3	April 1998
530-2	Maximum Sheet Flow Lengths for Silt Fences	530-8	April 1998
530-3	Maximum Contributing Area for Ditch and Swale Applications	530-8	April 1998
530-4	Design Process for Drainage and Erosion Control Geotextiles and Nonstandard Applications	530-12	April 1998
530-5	Design Process for Separation, Soil Stabilization, and Silt Fence	530-13	November 1999
530-6a	Examples of Various Geosynthetics	530-14	April 1998
530-6b	Examples of Various Geosynthetics	530-15	April 1998
530-7a	Geotextile Application Examples	530-16	April 1998
530-7b	Geotextile Application Examples	530-17	April 1998
530-7c	Geotextile Application Examples	530-18	April 1998
530-7d	Geotextile Application Examples	530-19	April 1998
530-8	Definition of Slope Length	530-20	April 1998
530-9	Definition of Ditch or Swale Storage Length and Width	530-21	April 1998
530-10	Silt Fences for Large Contributing Area	530-22	April 1998
530-11	Silt Fence End Treatment	530-23	April 1998
530-12	Gravel Check Dams for Silt Fences	530-24	April 1998
610-1	Type of Area and Appropriate Level of Service	610-3	June 1989
610-2	Adjustment Factor for Type of Multilane Highway and Development Environment, f_E	610-3	June 1989
610-3	Maximum ADT vs. Level of Service and Type of Terrain for Two-Lane Rural Highways	610-4	June 1989
610-4	Service Flow Rate per Lane (SFL) for Multilane Highways	610-5	June 1989
610-5	Peak-Hour Factors	610-6	June 1989
610-6	Service Flow Rates per Lane (SFL) for Freeways	610-6	June 1989
620-1a	Alignment Examples	620-6	April 1998
620-1b	Alignment Examples	620-7	April 1998
620-1c	Alignment Examples	620-8	April 1998
630-1a	Coordination of Horizontal and Vertical Alignments	630-4	April 1998
630-1b	Coordination of Horizontal and Vertical Alignments	630-5	April 1998
630-1c	Coordination of Horizontal and Vertical Alignments	630-6	April 1998
630-2	Grade Length	630-7	April 1998
630-3	Grading at Railroad Crossings	630-8	April 1998
640-1	Minimum Radius for Normal Crown Section	640-5	December 1998
640-2	Side Friction Factor	640-5	December 1998
640-3	Divided Highway Roadway Sections	640-10	December 1998
640-4	Undivided Multilane Highway Roadway Sections	640-11	December 1998
640-5	Two-Lane Highway Roadway Sections	640-12	December 1998
640-6a	Ramp Roadway Sections	640-13	December 1998
640-6b	Ramp Roadway Sections	640-14	December 1998
640-7a	Traveled Way Width for Two-Way Two-Lane Turning Roadways	640-15	December 1998

Figure Number	Title	Page	Last Date
640-7b	Traveled Way Width for Two-Way Two-Lane Turning Roadways	640-16	December 1998
640-8a	Traveled Way Width for Two-Lane One-Way Turning Roadways	640-17	December 1998
640-8b	Traveled Way Width for Two-Lane One-Way Turning Roadways	640-18	December 1998
640-9a	Traveled Way Width for One-Lane Turning Roadways	640-19	December 1998
640-9b	Traveled Way Width for One-Lane Turning Roadways	640-20	December 1998
640-9c	Traveled Way Width for One-Lane Turning Roadways	640-21	December 1998
640-10a	Shoulder Details	640-22	June 1999
640-10b	Shoulder Details	640-23	December 1998
640-11a	Superelevation Rates (10% Max)	640-24	December 1998
640-11b	Superelevation Rates (6% Max)	640-25	December 1998
640-11c	Superelevation Rates (8% Max)	640-26	December 1998
640-12	Superelevation Rates for Turning Roadways at Intersections	640-27	December 1998
640-13a	Superelevation Transitions for Highway Curves	640-28	June 1999
640-13b	Superelevation Transitions for Highway Curves	640-29	June 1999
640-13c	Superelevation Transitions for Highway Curves	640-30	November 1999
640-13d	Superelevation Transitions for Highway Curves	640-31	June 1999
640-13e	Superelevation Transitions for Highway Curves	640-32	June 1999
640-14a	Superelevation Transitions for Ramp Curves	640-33	November 1999
640-14b	Superelevation Transitions for Ramp Curves	640-34	November 1999
640-15a	Divided Highway Median Sections	640-35	December 1998
640-15b	Divided Highway Median Sections	640-36	December 1998
640-15c	Divided Highway Median Sections	640-37	December 1998
640-16a	Roadway Sections in Rock Cuts Design A	640-38	December 1998
640-16b	Roadway Sections in Rock Cuts Design B	640-39	December 1998
640-17	Roadway Sections With Stepped Slopes	640-40	December 1998
640-18a	Bridge End Slopes	640-41	December 1998
640-18b	Bridge End Slopes	640-42	December 1998
650-1	Passing Sign Distance	650-1	April 1998
650-2	Design Stopping Sight Distance	650-3	June 1999
650-3	Existing Stopping Sight Distance	650-3	June 1999
650-4	Design Stopping Sight Distance on Grades	650-3	June 1999
650-5	Decision Sight Distance	650-5	April 1998
650-6	Passing Sight Distance for Crest Vertical Curves	650-6	April 1998
650-7	Stopping Sight Distance for Crest Vertical Curves	650-7	April 1998
650-8	Stopping Sight Distance for Sag Vertical Curves	650-8	August 1998
650-9	Horizontal Stopping Sight Distance	650-9	August 1998
700-1	Design Clear Zone Distance Table	700-8	June 1999
700-2	Design Clear Zone Inventory Form	700-9	August 1997
700-3	Recovery Area	700-11	August 1997
700-4	Design Clear Zone for Ditch Sections	700-12	August 1997
700-5	Guidelines for Embankment Barrier	700-13	August 1997
700-6	Mailbox Location and Turnout Design	700-14	August 1997

Figure Number	Title	Page	Last Date
700-7	Warrants for Median Barrier	700-15	August 1997
700-8	Glare Screens	700-16	August 1997
710-1	Type 7 Bridge Rail Upgrade Criteria	710-2	August 1998
710-2	Longitudinal Barrier Deflection	710-3	November 1997
710-3	Longitudinal Barrier Flare Rates	710-4	December 1998
710-4	Guardrail Locations on Slopes	710-5	December 1998
710-5	Old Type 3 Anchor	710-7	November 1999
710-6	Guardrail Connections	710-8	November 1997
710-7	Transitions and Connections	710-9	April 1998
710-8	Concrete Barrier Shapes	710-11	November 1997
710-9	Single Slope Concrete Barrier	710-12	November 1997
710-10	Safety Shaped Concrete Bridge Rail Retrofit	710-14	November 1997
710-11a	Barrier Length of Need	710-16	November 1997
710-11b	Barrier Length of Need	710-17	December 1998
710-12	Beam Guardrail Post Installation	710-18	November 1997
710-13	Beam Guardrail Terminals	710-19	December 1998
710-14	Cable Barrier Locations on Slopes	710-20	November 1997
710-15	Thrie Beam Bridge Rail Retrofit Criteria	710-21	April 1998
720-1	Impact Attenuator Sizes	720-4	June 1999
720-2a	Impact Attenuator Systems Permanent Installations	720-6	June 1999
720-2b	Impact Attenuator Systems Permanent Installations	720-7	June 1999
720-2c	Impact Attenuator Systems Permanent Installations	720-8	June 1999
720-3	Impact Attenuator Systems Work Zone Installations	720-9	June 1999
720-4a	Impact Attenuator Systems — Older Systems	720-10	June 1999
720-4b	Impact Attenuator Systems — Older Systems	720-11	June 1999
720-3	Impact Attenuator Comparison	720-12	June 1999
820-1a	Sign Support Locations	820-5	November 1999
820-1b	Sign Support Locations	820-6	November 1999
820-2	Wood Posts	820-7	November 1999
820-3	Steel Posts	820-8	November 1999
820-4	Laminated Wood Box Posts	820-9	November 1999
830-1	Guidepost Requirements	830-3	September 1992
830-2 M	Spacing of Wildlife Reflectors	830-5	March 1994
830-2	Spacing of Wildlife Reflectors	830-7	March 1994
840-1 M	Basic Illumination Applications	840-4	March 1994
840-2	Basic Illumination Applications	840-5	June 1989
840-3	Basic Illumination Applications	840-6	June 1989
840-1	Basic Illumination Applications	840-7	March 1994
850-1	Responsibility for Various Types of Facilities on State Highways	850-12	June 1989
850-2 M	Example Optimum Cycle and Split Calculation	850-13	March 1994
850-3	Controller Frame Configurations	850-14	June 1989
850-4	Control Application Variations	850-15	June 1989
850-5a M	Signal Displays	850-16	March 1994
850-5b M	Signal Displays	850-17	March 1994

Figure Number	Title	Page	Last Date
850-6a M	Strain Pole and Foundation Selection Procedure	850-18	March 1994
850-6b M	Strain Pole and Foundation Selection Example	850-19	March 1994
850-7 M	Conduit	850-20	March 1994
850-8 M	Example Signal Plan	850-21	March 1994
850-9	Standard Intersection Movements and Head Numbers	850-22	June 1989
850-10a	Typical Phase Sequence Diagrams	850-23	June 1989
850-10b	Typical Phase Sequence Diagrams	850-24	June 1989
850-10c	Typical Phase Sequence Diagrams	850-25	June 1989
850-10d	Typical Phase Sequence Diagrams	850-26	June 1989
850-11	Signal Sequence Chart	850-27	June 1989
850-12	Typical Wiring Schematic	850-28	June 1989
850-13 M	Typical Signal Standard Detail Chart	850-29	March 1994
850-2	Example Optimum Cycle and Split Calculation	850-31	March 1994
850-5a	Signal Displays	850-32	March 1994
850-5b	Signal Displays	850-33	March 1994
850-6a	Strain Pole and Foundation Selection Procedure	850-34	March 1994
850-6b	Strain Pole and Foundation Selection Example	850-35	March 1994
850-7	Conduit	850-36	March 1994
850-8	Example Signal Plan	850-37	March 1994
850-13	Typical Signal Standard Detail Chart	850-38	March 1994
910-1	Design Vehicle Types	910-3	August 1998
910-2	Intersection Design Vehicle	910-3	August 1998
910-3	Shy Distance for Barrier Curb	910-7	August 1997
910-4	U-Turn Spacing	910-9	August 1997
910-5	Sight Distance for Turning Vehicles	910-10	August 1997
910-6a M	Turning Path Template	910-13	August 1997
910-6b M	Turning Path Template	910-14	August 1997
910-7 M	Right-Turn Corner	910-15	August 1997
910-8 M	Left-Turn Storage Guidelines	910-16	August 1997
910-9a	Left-Turn Storage Length	910-17	November 1999
910-9b	Left-Turn Storage Length	910-18	November 1999
910-9c	Left-Turn Storage Length	910-19	November 1999
910-9d M	Additional Left-Turn Storage for Trucks	910-20	August 1997
910-10a	Channelization Widening	910-21	November 1999
910-10b	Median Channelization — Median Width 7 m to 8 m	910-22	November 1999
910-10c	Median Channelization — Median Width of More Than 8 m	910-23	November 1999
910-10d	Minor Intersection on Divided Highway	910-24	November 1999
910-10e M	Two-Way Left-Turn Lane	910-25	April 1998
910-11 M	Right-Turn Lane Guidelines	910-26	December 1998
910-12a M	Right-Turn Pocket and Right-Turn Taper	910-27	August 1997
910-12b M	Right-Turn Lane	910-28	August 1997
910-13 M	Acceleration Lane	910-29	August 1997
910-14a M	Traffic Island Designs	910-30	August 1997
910-14b M	Traffic Island Designs	910-31	August 1997
910-14c M	Traffic Island Designs	910-32	August 1997
910-15	U-Turn Locations	910-33	November 1999

Figure Number	Title	Page	Last Date
910-16a	Sight Distance for Grade Intersection With Stop Control	910-34	November 1999
910-16b	Sight Distance for Grade Intersection With Stop Control	910-35	August 1997
910-16c	Sight Distance at Intersections	910-36	November 1999
910-17	Interchange Ramp Terminals	910-37	August 1997
920-1	Road Approach Design Templates	920-3	April 1998
920-2	Minimum Corner Clearance	920-4	April 1998
920-3	Noncommercial Approach Design Template A	920-5	November 1999
920-4	Noncommercial Approach Design Template B and C	920-6	November 1999
920-5	Commercial Approach — Single Approach Design Template D	920-7	April 1998
920-6	Road Approach Sight Distance	920-8	November 1999
920-7	Road Approach Spacing and Corner Clearance	920-9	November 1999
930-1 M	Sight Distance at Railroad Crossing	930-4	March 1994
930-2	Guidelines for Railroad Crossing Protection	930-5	June 1994
930-3 M	Typical Pullout Lane at Railroad Crossing	930-6	March 1994
930-4 M	Railroad Crossing Plan for Washington Utilities and Transportation Commission	930-7	March 1994
930-5 M	Longitudinal Easement Cross Sections	930-8	March 1994
930-1	Sight Distance at Railroad Crossing	930-9	March 1994
930-3	Typical Pullout Lane at Railroad Crossing	930-10	March 1994
930-4	Railroad Crossing Plan for Washington Utilities and Transportation Commission	930-11	March 1994
930-5	Longitudinal Easement Cross Sections	930-12	March 1994
940-1	Ramp Design Speed	940-4	June 1999
940-2	Maximum Ramp Grade	940-5	November 1999
940-3	Ramp Widths	940-5	November 1999
940-4	Basic Interchange Patterns	940-11	June 1999
940-5	Minimum Ramp Terminal Spacing	940-12	June 1999
940-6a	Lane Balance	940-13	June 1999
940-6b	Lane Balance	940-14	June 1999
940-7	Main Line Lane Reduction Alternatives	940-15	June 1999
940-8	Acceleration Lane Length	940-16	June 1999
940-9a	On-Connection (Single-Lane, Taper Type)	940-17	November 1999
940-9b	On-Connection (Single-Lane, Parallel Type)	940-18	November 1999
940-9c	On-Connection (Two-Lane, Parallel Type)	940-19	November 1999
940-9d	On-Connection (Two-Lane, Taper Type)	940-20	November 1999
940-10	Deceleration Lane Length	940-21	June 1999
940-11	Gore Area Characteristics	940-22	June 1999
940-12a	Off-Connection (Single Lane, Taper Type)	940-23	November 1999
940-12b	Off-Connection (Single Lane, Parallel Type)	940-24	November 1999
940-12c	Off-Connection (Single-Lane, One Lane Reduction	940-25	November 1999
940-12d	Off-Connection (Two-Lane, Taper Type)	940-26	November 1999
940-12e	Off-Connection (Two-Lane, Parallel Type)	940-27	November 1999
940-13a	Collector Distributor (Outer Separations)	940-28	June 1999
940-13b	Collector Distributor (Off-Connections)	940-29	November 1999
940-13c	Collector Distributor (On-Connections)	940-30	June 1999
940-14	Loop Ramps Connections	940-31	June 1999

Figure Number	Title	Page	Last Date
940-15	Length of Weaving Sections	940-32	June 1999
940-16	Temporary Ramps	940-33	June 1999
940-17	Interchange Plan	940-34	June 1999
1010-1	Rolling Resistance	1010-4	November 1999
1010-2a	Performance for Heavy Trucks	1010-6	November 1999
1010-2b	Speed Reduction Example	1010-7	November 1999
1010-3	Level of Service — Multilane	1010-8	November 1999
1010-4	Auxiliary Climbing Lane	1010-9	November 1999
1010-5	Warrant for Passing Lanes	1010-10	November 1999
1010-6	Auxiliary Passing Lane	1010-11	November 1999
1010-7	Slow Moving Vehicle Turnout	1010-12	November 1999
1010-8	Typical Emergency Escape Ramp	1010-13	November 1999
1010-9	Chain-Up/Chain-Off Area	1010-14	November 1999
1020-1a M	Two-Way Bike Path on Separated Right of Way	1020-11	March 1994
1020-1b M	Two-Way Bike Path Along Highway	1020-12	March 1994
1020-1c M	Bikeways on Highway Bridges	1020-13	March 1994
1020-2 M	Curve Radii & Superelevations	1020-14	March 1994
1020-3 M	Bikeway Curve Widening for Various Radii	1020-15	March 1994
1020-4 M	Stopping Sight Distance	1020-16	March 1994
1020-5 M	Sight Distances for Crest Vertical Curves	1020-17	March 1994
1020-6 M	Lateral Clearances on Horizontal Curves	1020-18	March 1994
1020-7 M	Typical Bike Lane Cross Sections	1020-19	March 1994
1020-8	Typical Bicycle/Auto Movements at Intersection of Multilane Streets	1020-20	June 1989
1020-9 M	Bike Lane Ramp Crossing	1020-21	March 1994
1020-10 M	Bike Lanes Approaching Motorists' Right-Turn-Only Lanes	1020-22	March 1994
1020-11 M	Guidelines for Hiking Trails	1020-23	March 1994
1020-12 M	Walkways on Highway Bridges	1020-24	March 1994
1020-13 M	Handicap Passing and Turning Space for Sidewalks	1020-25	March 1994
1020-1a	Two-Way Bike Path on Separated Right of Way	1020-27	March 1994
1020-1b	Two-Way Bike Path Along Highway	1020-28	March 1994
1020-1c	Bikeways on Highway Bridges	1020-29	March 1994
1020-2	Curve Radii & Superelevations	1020-30	March 1994
1020-3	Bikeway Curve Widening for Various Radii	1020-31	March 1994
1020-4	Stopping Sight Distance	1020-32	March 1994
1020-5	Sight Distances for Crest Vertical Curves	1020-33	March 1994
1020-6	Lateral Clearances on Horizontal Curves	1020-34	March 1994
1020-7	Typical Bike Lane Cross Sections	1020-35	March 1994
1020-9	Bike Lane Ramp Crossing	1020-36	March 1994
1020-10	Bike Lanes Approaching Motorists' Right-Turn-Only Lanes	1020-37	March 1994
1020-11	Guidelines for Hiking Trails	1020-38	March 1994
1020-12	Walkways on Highway Bridges	1020-39	March 1994
1020-13	Handicap Passing and Turning Space for Sidewalks	1020-40	March 1994
1030-1	Typical Truck Storage	1030-3	November 1999
1030-2	Typical Single RV Dump Station Layout	1030-4	November 1999
1030-3	Typical Two RV Dump Station Layout	1030-4	November 1999

Figure Number	Title	Page	Last Date
1040-1a M	Truck Weighing Station Installations for Multilane Limited Access Highways	1040-3	March 1994
1040-1b M	Truck Weigh Station Installations for Two-Lane Highways	1040-4	March 1994
1040-1c M	Vehicle Inspection Installation	1040-5	March 1994
1040-1d M	Portable Scale Site — Shoulder Widening	1040-6	March 1994
1040-1e M	Minor Portable Scale Site — One-Way Traffic	1040-7	March 1994
1040-1f M	Major Portable Scale Site — One-Way Traffic	1040-8	March 1994
1040-1a	Truck Weighing Station Installations for Multilane Limited Access Highways	1040-9	March 1994
1040-1b	Truck Weigh Station Installations for Two-Lane Highways	1040-10	March 1994
1040-1c	Vehicle Inspection Installation	1040-11	March 1994
1040-1d	Portable Scale Site — Shoulder Widening	1040-12	March 1994
1040-1e	Minor Portable Scale Site — One-Way Traffic	1040-13	March 1994
1040-1f	Major Portable Scale Site — One-Way Traffic	1040-14	March 1994
1050-1 M	Typical Concurrent Flow Lanes	1050-11	June 1995
1050-2 M	Roadway Widths for Three-Lane HOV On and Off Ramps	1050-12	June 1995
1050-3a M	Separated Roadway Single-Lane, One-Way or Reversible	1050-13	June 1995
1050-3b M	Separated Roadway Multi-Lane, One-Way or Reversible	1050-14	June 1995
1050-4a M	Single-Lane Ramp Meter With HOV Bypass	1050-15	June 1995
1050-4b M	Two-Lane Ramp Meter With HOV Bypass	1050-16	June 1995
1050-5a M	Typical HOV Flyover	1050-17	June 1995
1050-5b M	Typical Inside Lane On Ramp	1050-18	June 1995
1050-5c M	Inside Single-Lane On Ramp	1050-19	June 1995
1050-6 M	Typical Slip Ramp	1050-20	June 1995
1050-7a M	Enforcement Area (One Direction Only)	1050-21	June 1995
1050-7b M	Median Enforcement Area	1050-22	June 1995
1050-7c M	Bidirectional Observation Point	1050-23	June 1995
1050-1	Typical Concurrent Flow Lanes	1050-24	June 1995
1050-2	Roadway Widths for Three-Lane HOV On and Off Ramps	1050-25	June 1995
1050-3a	Separated Roadway Single-Lane, One-Way or Reversible	1050-26	June 1995
1050-3b	Separated Roadway Multi-Lane, One-Way or Reversible	1050-27	June 1995
1050-4a	Single-Lane Ramp Meter With HOV Bypass	1050-28	June 1995
1050-4b	Two-Lane Ramp Meter With HOV Bypass	1050-29	June 1995
1050-5a	Typical HOV Flyover	1050-30	June 1995
1050-5b	Typical Inside Lane On Ramp	1050-31	June 1995
1050-5c	Inside Single-Lane On Ramp	1050-32	June 1995
1050-6	Typical Slip Ramp	1050-33	June 1995
1050-7a	Enforcement Area (One Direction Only)	1050-34	June 1995
1050-7b	Median Enforcement Area	1050-35	June 1995
1050-7c	Bidirectional Observation Point	1050-36	June 1995
1060-1 M	Bus Berth Design	1060-14	March 1994
1060-2	Transit Center Sawtooth Bus Berth Design Example	1060-15	December 1991
1060-3 M	Bus Turnout Transfer Center	1060-16	March 1994
1060-4 M	Off-Street Transfer Center	1060-17	March 1994
1060-5 M	Minimum Bus Zone Dimensions	1060-18	March 1994
1060-6	Bus Stop Pullouts, Arterial Streets	1060-19	November 1997
1060-7 M	Minimum Bus Zone and Pullout after Right Turn Dimensions	1060-20	March 1994

Figure Number	Title	Page	Last Date
1060-8 M	Shelter Siting	1060-21	March 1994
1060-9 M	Typical Bus Shelter Design	1060-22	March 1994
1060-10 M	Design Vehicle Turning Movements	1060-23	July 1994
1060-11 M	Turning Template for Articulated Bus	1060-24	July 1994
1060-12 M	Intersection Design	1060-25	March 1994
1060-13 M	Cross-Street Width Occupied by Turning Vehicle for Various Angles of Intersection and Curb Radii	1060-26	March 1994
1060-1	Bus Berth Design	1060-27	March 1994
1060-3	Bus Turnout Transfer Center	1060-28	March 1994
1060-4	Off-Street Transfer Center	1060-29	March 1994
1060-5	Minimum Bus Zone Dimensions	1060-30	March 1994
1060-6	Bus Stop Pullouts, Arterial Streets	1060-31	March 1994
1060-7	Minimum Bus Zone and Pullout after Right Turn Dimensions	1060-32	March 1994
1060-8	Shelter Siting	1060-33	March 1994
1060-9	Typical Bus Shelter Design	1060-34	March 1994
1060-10	Design Vehicle Turning Movements	1060-35	July 1994
1060-11	Turning Template for Articulated Bus	1060-36	July 1994
1060-12	Intersection Design	1060-37	March 1994
1060-13	Cross-Street Width Occupied by Turning Vehicle for Various Angles of Intersection and Curb Radii	1060-38	March 1994
1110-1	Bridge Site Data Check List	1110-5	November 1999
1120-1a	Railroad Vertical Clearance — New Bridge Construction	1120-5	December 1998
1120-1b	Railroad Vertical Clearance — Existing Bridge Modifications	1120-6	December 1998
1130-1a	Typical Mechanically Stabilized Earth Gravity Walls	1130-22	December 1998
1130-1b	Typical Prefabricated Modular Gravity Walls	1130-23	December 1998
1130-1c	Typical Rigid Gravity, Semigravity Cantilever, Nongravity Cantilever, and Anchored Walls	1130-24	December 1998
1130-1d	Typical Rockery and Reinforced Slope	1130-25	December 1998
1130-2	MSE Wall Drainage Detail	1130-26	December 1998
1130-3	Retaining Walls With Traffic Barriers	1130-27	December 1998
1130-4a	Retaining Wall Design Process	1130-28	December 1998
1130-4b	Retaining Wall Design Process — Proprietary	1130-29	December 1998
1130-5	Retaining Wall Bearing Pressure	1130-30	December 1998
1140-1	Standard Noise Wall Types	1140-3	December 1998

Figure Number	Title	Page	Last Date
1410-1	Appraisal and Acquisition for Limited Access Highways	1410-6	June 1999
1420-1a	Full Access Control Criteria	1420-10	June 1989
1420-1b M	Access Control for Typical Interchange	1420-11	March 1994
1420-1c M	Access Control at Ramp Termination	1420-12	March 1994
1420-2a	Partial Access Control Criteria	1420-13	March 1994
1420-2b M	Access Control for Intersection at Grade	1420-14	March 1994
1420-3 M	Access Control Limits at Intersections	1420-15	March 1994
1420-1b	Access Control for Typical Interchange	1420-17	March 1994
1420-1c	Access Control at Ramp Termination	1420-18	March 1994
1420-2a	Partial Access Control Criteria	1420-19	March 1994
1420-2b	Access Control for Intersection at Grade	1420-20	March 1994
1420-3	Access Control Limits at Intersections	1420-21	March 1994
1430-1	Access Report Plan	1430-4	June 1989
1430-2	Access Hearing Plan	1430-5	June 1989
1440-1a	Interagency Agreement	1440-4	June 1999
1440-1b	Interagency Agreement	1440-5	June 1999
1450-1	Monument Documentation Summary	1450-4	October 1995
1450-2a	Application for Permit to Remove or Destroy a Survey Monument	1450-5	October 1995
1450-3	Record of Monuments and Accessories	1450-7	October 1995
1450-4a	Land Corner Record	1450-8	October 1995
1450-4b	Corner Record Index Diagram	1450-9	October 1995

5:P65:DP/DMM

330 Design Documentation, Approval, and Process Review

330.01 General
330.02 References
330.03 Purpose
330.04 Project Development
330.05 Project Definition Phase
330.06 Design Documentation
330.07 Design Approval
330.08 Process Review for Region Approved Projects

330.01 General

The project file contains the documentation of planning, project definition, programming, design, approvals, contract assembly, utility relocation, needed right-of-way, advertisement, award, construction, and maintenance of a project. A project file is completed for all project and follows the project until a new project supersedes it.

Design documentation is a part of the project file. It documents design decisions and the design process followed. Design documentation is retained in a permanent retrievable file at a central location in each region. For operational changes and developer projects, design documentation is required and is retained by the region.

330.02 References

Construction Manual, M 41-01, WSDOT

Directional Documents Publication Index, D 00-00, WSDOT

Washington State Department of Transportation Certification Acceptance Approval from FHWA, December 4, 1978, and subsequent revisions

FHWA Washington Stewardship Plan, WSDOT 1993

Master Plan for Limited Access, WSDOT

Plans Preparation Manual, M 22-31, WSDOT

Route Development Plan, WSDOT

State Highway System Plan, WSDOT

Highway Runoff Manual, WSDOT

330.03 Purpose

Design documentation is prepared to record the evaluations by the various disciplines that result in design recommendations. Design assumptions and decisions made prior to and during the project definition phase are included. Changes that occur throughout the project development process are documented. Justification and approvals, if required, are also included.

The design documentation identifies:

- The condition or problem that generated the purpose and need for the project (as noted in the Project Summary)
- The design alternatives considered
- The project design selected
- The work required to satisfy the commitments made in the environmental documents
- The conformity of the selected design to departmental policies and standard practices
- The supporting information for any design variances
- The internal and external coordination

The design documentation is used to:

- Examine estimates of cost
- Prepare access and right of way plans
- Assure that all commitments are provided for in the recommended design
- Plan for maintenance responsibilities as a result of the project
- Provide supporting information for design variances
- Explain design decisions
- Document the project development process and design decisions
- Preserve a record of the project's development for future reference
- Prepare plans, specifications, and estimate (PS&E)

430.01 General
430.02 Design Speed
430.03 Roadway Widths
430.04 Ramp Lane Widths
430.05 Stopping Sight Distance
430.06 Profile Grades
430.07 Cross Slope
430.08 Fill Slopes and Ditch Inslopes
430.09 Intersections
430.10 Structures

430.01 General

Modified design level (M) preserves and improves existing roadway geometrics, safety, and operational elements. This chapter provides the design guidance that is unique to the modified design level.

Design elements that do not have modified design level guidance include:

- Access control, see Chapter 1420
- Access management, see Chapter 920
- Basic safety, see Chapter 410
- Clear zone, see Chapter 700
- Traffic barriers, see Chapter 710
- Gore area lighting, see Chapter 840
- Interchange areas, see Chapter 940

Design elements that have both modified and full design level components include:

- Horizontal alignment, see Chapter 620
- Superelevation and shoulder cross slope, see Chapter 640
- Vertical alignment, see Chapter 630

430.02 Design Speed

When applying modified design level to a project, select a design speed for use in the design process that reflects the character of the terrain and the type of highway. Select a speed that is not less than the posted speed, the proposed posted speed, or the operating speed, whichever is higher.

430.03 Roadway Widths

The design of a project must not decrease the existing roadway width.

Lane and shoulder widths are shown in Figures 430-3 and 4. Consider joint use with other modes of transportation in shoulder design.

Review route continuity and roadway widths. Select widths on the tangents to be consistent throughout a given section of the route. Make any changes where the route characteristics change.

(1) Turning Roadway Widths

It may be necessary to widen the roadway on curves to accommodate large vehicles. The total two-lane roadway width of a curve may not be less than that shown in Figure 430-5 or, if the internal angle (delta) is less than 90 degrees, Figure 430-6. The proposed roadway width for a curve may not be less than that of the adjacent tangent sections.

The total roadway width from Figure 430-5 or Figure 430-6 may include the shoulder. When the shoulder is included, full-depth pavement is required.

Widening of the total roadway width of a curve by less than 0.6 m is not required for existing two-lane roadways that are to remain in place.

(2) Median Width

See Figure 430-3.

430.04 Ramp Lane Widths

Ramp lane widths are shown in Figure 430-1 and in Figure 430-10. For ramps with radii less than 100 m apply full design level see Chapter 640.

Curve Radius	Lane Width
Tangent - 1200 m	3.9 m
900 m - 600 m	4.2 m
300 m - 100 m	4.5 m

Turning Ramp Lane Widths
Modified Design Level
Figure 430-1

430.05 Stopping Sight Distance

(1) Existing Stopping Sight Distance for Vertical Curves

For crest vertical curves use the existing algebraic difference in grades and the length of curve to compare the existing condition to Figure 430-7. If corrective action is required by Figure 430-7, apply full design level and see Chapter 650.

When modified design level is being applied, sag vertical curves are not normally addressed.

(2) Stopping Sight Distance for Horizontal Curves

For modified design level, use the existing lateral clearance to the sight obstruction and the curve radius to compare the existing condition to Figure 430-8. If corrective action is required by Figure 430-8, apply full design level and see Chapter 650.

For Figure 430-8, an obstruction is any object with a height of 0.6 m or more above the roadway surface on the inside of a curve. Examples of possible obstructions are median barrier, guardrail, bridges, walls, cut slopes, wooded areas, and buildings.

430.06 Profile Grades

When applying modified design level, profile grades generally are not flattened. However, corrective action may be justified for combinations of steep grades and restricted horizontal or vertical curvature. Identify major modifications to horizontal and vertical alignment in the Project Decisions Summary. Total removal of pavement and reconstruction of the subgrade are examples of major modifications.

430.07 Cross Slope

On all tangent sections, the normal cross slopes of the traveled way are 2 percent. Cross slopes up to 2 percent have a barely perceptible effect on vehicle steering, but cross slopes steeper than 2 percent can be noticeable.

The algebraic difference in cross slopes is an operational factor during a passing maneuver on a two-lane road. Its influence increases when increased traffic volumes decrease the number and size of available passing opportunities.

If a longitudinal contiguous section of pavement is to be removed or is on a reconstructed alignment, or if a top course is to be placed over existing pavement, design the restored pavement to a cross slope of 2 percent.

A somewhat steeper cross slope may be necessary to facilitate pavement drainage in areas of intense rainfall, even though this might be less desirable from the operational point of view. In such areas, the design cross slopes may be increased to 2.5 percent with an algebraic difference of 5 percent.

For existing pavements, cross slopes within a range of 1 to 3 percent may remain if there are no operational or drainage problems and— on a two-way, two-lane road — the following conditions are met:

- The algebraic difference is not greater than 4 percent where the ADT is greater than 2000.
- The algebraic difference is not greater than 5 percent where the ADT is 2000 or less.
- The algebraic difference is not greater than 6 percent and the road is striped or signed for no passing.

If the existing pavement does not meet the conditions above, correct the cross slope(s) to be within the range of 1.5 to 2.5 percent. For a two-way, two-lane road, provide an algebraic difference to meet the appropriate conditions stated above except when facilitating drainage in areas of intense rainfall. When applying modified design level to a road with bituminous surface treatment (BST), cross slope correction is not required on the basis of algebraic differences alone.

To maintain or restore curb height, consider lowering the existing pavement level and correcting cross slope by grinding before an asphalt overlay. On urban highways, the cross slope of the outside shoulder may be steepened to minimize curb height and other related impacts. The shoulder may be up to 6 percent with a rollover between the traveled way and the shoulder of no more than 8 percent.

430.08 Fill Slopes and Ditch Inslopes

Foreslopes (fill slopes and ditch inslopes) and cut slopes are designed as shown in Figure 430-9 for modified design level main line roadway sections. After the foreslope has been determined, use the guidance in Chapter 700 to determine the need for a traffic barrier.

When a crossroad or road approach has steep foreslopes, there is the possibility that an errant vehicle might become airborne. Therefore, flatten crossroad and road approach foreslopes to 1:6 where practical and at least to 1:4. Provide smooth transitions between the main line foreslopes and the crossroad or road approach foreslopes. Where possible, move the crossroad or road approach drainage away from the main line. This can locate the pipe outside the design clear zone and reduce the length of pipe required.

430.09 Intersections

(1) General

Except as given below, design intersections to meet the requirements in Chapter 910.

(2) Design Vehicle

The following is provided as a guide for determining the design vehicle.

Intersection Type	Design Vehicle
Junction of Major Truck Routes	WB-20
Junction of State Routes	WB 12
Ramp Terminals	WB-12
Other Rural	SU[1]
Urban Industrial	SU[1]
Urban Commercial	P[1]
Residential	P[1]

[1]When the intersection is on a transit route, use the BUS design vehicle. See Chapter 1060 for additional guidance for transit facilities and for the BUS turning path templates.

Design Vehicles
Modified Design Level
Figure 430-2

(3) Angle

The allowable angle between any two respective legs is between 60° and 120°. When realignment is required to meet this angle requirement, consider realigning to an angle between 75° and 105°.

430.10 Structures

The minimum widths for bridges are shown in Figure 430-4. Consider joint use with other modes of transportation in lane and shoulder design. See Chapter 1020, Facilities for Nonmotorized Transportation, Chapter 1050, High Occupancy Vehicle Facilities, and Chapter 1060, Transit Benefit Facilities.

Principal Arterial Notes:

1 Justify the selection of a P-6 standard.
2 The design year is 20 years after the year the construction is scheduled to begin.
3 Where DHV exceeds 700, provide four lanes. For lower volumes, when the volume/capacity ratio is equal to or exceeds 0.75, consider the needs for a future four-lane facility. When considering truck climbing lanes on a P-3 design class highway, perform an investigation to determine if a P-2 design class highway is justified.
4 When considering a multilane highway, perform an investigation to determine if a truck climbing lane will satisfy the need.
5 See Chapter 1420 for access control requirements.
6 All main line and major-spur railroad tracks will be separated. Consider allowing at-grade crossings at minor-spur railroad tracks.
7 Criteria for railroad grade separations are not clearly definable. Evaluate each site regarding the hazard potential. Provide justification for railroad grade separations.
8 The preferred design speed is within the range. Design speeds above the range may be selected, with justification. The lower end of the range is the minimum design speed for the design class.
9 3.6 m lanes are required when the truck DHV is 6% or grater.
10 Minimum left shoulder width is to be as follows: four lanes — 1.2 m: six or more lanes — 3.0 m. For 6-lane roadways, existing 1.8 m left shoulders may remain when no other widening is required.
11 When curb section is used, a 1.8 m shoulder outside the face of curb is acceptable. See Chapter 910 for shy distances at curbs.
12 On freeways or expressways requiring less than eight lanes within the 20-year design period, provide sufficient median or lateral clearance and right of way to permit addition of a lane in each direction if required by traffic increase after the 20-year period.
13 When signing is required in the median of a six-lane section, the minimum width is 1.8 m. If barrier is to be installed at a future date, a 2.4 m minimum median is required.
14 Parking restricted when ADT is over 15,000.
15 Submit Form 223-528, Pavement Type Determination.
16 Provide right of way width 3 m desirable, 1.5 m minimum, wider than the slope stake for fill and slope treatment for cut. See Chapter 640 and the Standard Plans for slope treatment information.
17 19 m from edge of traveled way.
18 Make right of way widths not less than those required for necessary cross section elements.
19 See Chapter 1120 for the minimum vertical clearance.
20 For median widths 7.8 m or less, address bridges in accordance with Chapter 1120.
21 For pedestrian, bicycle, and sidewalk requirements see Chapter 1020. Curb requirements are in Chapter 910. Lateral clearances from the face of curb to obstruction are in Chapter 700.
22 Except in mountainous terrain, grades 1% steeper may be used in urban areas where development precludes the use of flatter grades or for one-way downgrades.

Geometric Design Data, Principal Arterial
Figure 440-4b

Design Class	Divided Multilane		Two-Lane						Undivided Multilane	
	M-1		M-2		M-3		M-4		M-5[1]	
	Rural	Urban	Rural	Urban	Rural	Urban	Rural	Urban	Rural	Urban
DHV in Design Year[2] NHS Non NHS	Over 701		201-700[3] 401-700		61-200[4] 201-400		60 and Under 200 and Under		Over 701	
Access Control[5]	Partial		Partial		Partial or None		None		Special Cases	
Separate Cross Traffic Highways Railroads	Where Warranted All		Where Warranted All[6]		Where Warranted Where Warranted[7]		Where Warranted Where Warranted[7]		Where Warranted Where Warranted [7]	
Design Speed Range (mph)[8]	70 50		70 50	60 40	70 50	60 40	60 40	60 30	70 40	60 30
Traffic Lanes Number Width (m)	4 or 6 divided 3.6		2 3.6		2 3.6		2 3.6		4 3.6	4 or 6 3.3[9]
Shoulder Width (m) Right of Traffic Left of Traffic	3.0 Variable[10]		2.4		1.8		1.2		2.4	2.4[11]
Median Width (m) 4 lane 6 lane	18 18	4.8 6.6							1.2	0.6[12]
Parking Lanes Width (m) — Minimum	None		None		None	3.0	None	3.0	None	3.0[13]
Pavement Type[14]	High		As required						High or Intermediate	
Right of Way[15] — Min Width (m)	(16)	(17)	36	24	36	24	30	24	45	24
Structures (m)[18]	Full Roadway Width[19]		12.0		10.8		9.6		Full Roadway Width	
Other Design Considerations-Urban			(20)		(20)		(20)		(20)	

Grades (%)[21]

Type of Terrain	Rural — Design Speed (mph)					Urban — Design Speed (mph)			
	40	50	60	70	80	30	40	50	60
Level	5	4	3	3	3	8	7	6	5
Rolling	6	5	4	4	4	9	8	7	6
Mountainous	8	7	6	5	5	11	10	9	8

Geometric Design Data, Minor Arterial

Figure 440-5a

510 Investigation of Soils, Rock, and Surfacing Materials

510.01 General
510.02 References
510.03 Materials Sources
510.04 Geotechnical Investigation, Design, and Reporting
510.05 Use of Geotechnical Consultants
510.06 Geotechnical Work by Others
510.07 Surfacing Report
510.08 Documentation

510.01 General

It is the responsibility of the Washington State Department of Transportation (WSDOT) to understand the characteristics of the soil and rock materials that support or are adjacent to the transportation facility to ensure that the facility, when designed, will be adequate to safely carry the estimated traffic. It is also the responsibility of WSDOT to ensure the quality and quantity of all borrow materials used in the construction of transportation facilities.

The following information serves as guidance in the above areas. Where a project consists of a surface overlay of an existing highway, requirements as set forth in *WSDOT Pavement Guide for Design, Evaluation and Rehabilitation* are used.

To identify the extent and estimated cost for a project, it is necessary to obtain and use an adequate base data. In recognition of this need, preliminary soils investigation work begins during project definition. This allows early investigative work and provides necessary data in a timely manner for use in project definition and design. More detailed subsurface investigation follows during the project design and plan, specification, and estimate (PS&E) phases.

It is essential to get the region's Materials Engineer (RME) and the Olympia Service Center (OSC) Geotechnical Branch involved in the project design as soon as possible once the need for geotechnical work is identified. See 510.04(3) for time-estimate information. Furthermore, if major changes occur as the project is developed, inform the RME and OSC Geotechnical Branch as soon as possible so that the geotechnical design can be adapted to the changes without significant delay to the project.

510.02 References

Construction Manual, M 41-01, WSDOT

Hydraulics Manual, M 23-03, WSDOT

Plans Preparation Manual, M 22-31, WSDOT

Standard Plans for Road, Bridge, and Municipal Construction (Standard Plans), M 21-01, WSDOT

Standard Specifications for Road, Bridge, and Municipal Construction (Standard Specifications), M 41-10, WSDOT

WSDOT Pavement Guide for Design, Evaluation and Rehabilitation

510.03 Materials Sources

(1) General

The region's Project Development Engineer (RPDE) determines when a materials source is needed. The region's Materials Engineer (RME) determines the best materials source for the project. (See Figure 510-1.) It is preferred that existing approved materials source sites be used when there are suitable sites available. When there are no approved sites available, the RME conducts a site investigation. The Olympia Service Center (OSC) Geotechnical Branch provides assistance upon request.

The RME selects sources for gravel base, borrow excavation and gravel borrow, crushed surfacing materials, mineral and concrete aggregates, riprap, and filler only after careful investigation of:

- The site. (Consider the adequacy of the work area.)
- The quality of the material.

- The quantity of the material. (Consider the needs of the immediate project and the needs to support future maintenance and construction work in the area.)
- Reclamation requirements.
- Aesthetic considerations.
- Economic factors.
- Ability to preserve or enhance the visual quality of the highway and local surroundings.

Once the materials source investigation and laboratory testing have been completed the RME prepares a materials source report. The materials source report summarizes the site geology, site investigation (including boring and test pit logs), source description, quality and quantity of material available, and other aspects of the materials sources that are relevant.

(2) Materials Source Approval

The RME submits the materials source report to the OSC Geotechnical Branch for review and approval.

The OSC Materials Office and the OSC Design Office must approve each pit or quarry site before it is purchased, leased, or acquired on a royalty basis. Until the approval process is complete, the project cannot be advertised for bids. Local and state permits are required for materials sources. To avoid delay in advertising the project, begin the site investigations and permitting process in the early stages of project definition.

510.04 Geotechnical Investigation, Design, and Reporting

(1) General

A geotechnical investigation is conducted on all projects that involve significant grading quantities, unstable ground, or foundations for structures in a manner that preserves the safety of the public who use the facility, as well as preserving the economic investment by the state of Washington. Geotechnical engineering must be conducted by engineers or engineering geologists who possess adequate geotechnical training and experience, and must be conducted in accordance with regionally or nationally accepted geotechnical practice. Where required by law, geotechnical engineering must be performed by, or under the direct supervision of, a person licensed to perform such work in the state of Washington.

(2) Key Contacts for Initiating Geotechnical Work

In general, the RME functions as the clearing house for all geotechnical work, with the exception of structural projects and Washington State Ferries (WSF) projects. The RME takes the lead in conducting the geotechnical work if the geotechnical work required is such that the ground is stable and relatively firm, bedrock is not involved, and the design of the project geotechnical elements does not require specialized geotechnical design expertise. If this is not the case, the RME asks for the involvement and services of the OSC Geotechnical Branch. They respond to and provide recommendations directly to the region's project design office (or the OSC Equipment and Facilities Office in the case of Facilities projects), but always keeping the RME "in the loop."

For structural projects (bridges and tunnels, for example), the Bridge and Structures Office works directly with the OSC Geotechnical Branch.

For WSF projects, the Terminal Engineering Office works directly with the RME or the OSC Geotechnical Branch, depending on the nature of the project.

For walls and noise walls, see Chapters 1130 and 1140, respectively. For geosynthetic design, see Chapter 530.

(3) Scheduling Considerations for Geotechnical Work

The region's Design Office, Bridge and Structures Office, WSF, and the Equipment and Facilities Office are responsible for identifying the potential need for geotechnical work, and requesting time and budget estimates from the RME or the OSC Geotechnical Branch, as early as practical to prevent delays to the project.

Once the geotechnical design request and the site data are received by the RME or the OSC Geotechnical Branch, it can take anywhere from two to six months, or more, to complete the geotechnical design, depending on the complexity of the project, whether or not test holes are needed, current workload, the need to give the work to consultants, and how long it takes to obtain environmental permits and rights of entry (ROE).

If a consultant must be used, the minimum time required to complete a design (for even a simple project) is typically 2.5 months.

In true emergency situations (a highway blocked by a landslide or a collapsed bridge, for example), it is possible to get geotechnical design work completed (in house or by consultants) more rapidly to at least provide a design for temporary mitigation.

Consider all of these factors when deciding how soon to initiate the geotechnical work for a project but, in general, the sooner, the better.

(4) Site Data and Permits Needed to Initiate Geotechnical Work

To initiate geotechnical work on a project during the design and PS&E phases, provide the following information:

(a) Project description.

(b) Plan sheets showing the following:

- Station and location of cuts, fills, walls, bridges, retention/detention ponds, or other geotechnical features to be designed.
- Existing utilities (as-built plans are acceptable).
- Right of way limits.
- Wetlands.
- Drainage features.
- Existing structures.
- Other features or constraints that could affect the geotechnical design or investigation.

(c) Electronic files, or cross sections every 15 to 20 m or as appropriate, to define existing and new ground line above and below the wall, cut, fill, and other pertinent information.

- Show stationing.
- Show locations of existing utilities, right of way lines, wetlands, and other constraints.
- Show locations of existing structures that might contribute load to the cut or fill.

(d) Right of entry agreements and permits required for geotechnical investigation.

(e) Due date and work order number.

(f) Contact person.

When the alignment and any constraints as noted above are staked, the stationing on the plans and in the field must be in the same units. Physical surveys are preferred to photogrammetric surveys to ensure adequate accuracy of the site data.

Permits and agreements to be supplied by the region might include:

- HPA
- Shoreline permits
- Tribal lands and waters
- Railroad easement and right of way
- City, county or local agency use permits
- Sensitive area ordinance permits

The region's project office is also responsible for providing the stations, offsets, and elevations of test holes to the nearest 0.3 m once the test holes have been drilled. Provide test hole locations using state plane coordinates as well, if available.

(5) Overview of Geotechnical Design Objectives for the Various Project Stages

(a) **Project Definition.** The project design office uses the geotechnical investigation results obtained during the project definition phase to develop the project delivery cost and schedule. Geotechnical recommendations provided for this phase will be at the conceptual/feasibility level. The investigation for this phase usually consists of a visual project walk-through and a review of the existing records, geologic maps, and so forth.

For projects of significant geotechnical scope and complexity, and if soil borings are not available at critical locations within the project, some soil borings might be drilled at this time. Potential geotechnical hazards (earthquake faults, liquefaction, landslides, rockfall, soft ground, for example) are identified during project definition, and conceptual hazard avoidance or mitigation plans are developed. Future geotechnical design services needed in terms of time and cost, including the need for special permits to perform the geotechnical exploration (critical areas ordinances), are determined at this time.

(b) **Project Design.** Once the roadway geometry is established, detailed design of cut and fill slopes, adequate to establish the right-of-way needs, is accomplished. Once approximate wall locations and heights are known, preliminary design of walls is performed to establish feasibility, primarily to establish right-of-way needs (as is true for slopes) and likely wall types. A similar level of design is applied to hydraulic structures, and to determine overall construction staging and constructibility requirements to address the geotechnical issues at the site. Conceptual and/or more detailed preliminary bridge foundation design is conducted during this phase if it was not conducted during project definition. Before the end of this phase, the geotechnical data necessary to allow future completion of the PS&E level design work is gathered (final geometric data, test hole data, and so forth.).

(c) **PS&E Development.** Final design of all geotechnical project features is accomplished. Recommendations for these designs, as well as special provisions and plan details to incorporate the geotechnical design recommendations in the PS&E, are provided in the geotechnical report. Minor geotechnical features such as signal/sign foundations and small detention/retention ponds are likely to be addressed at this stage, as the project details become clearer. Detailed recommendations for the constructibility of the project geotechnical features are also provided.

(6) Earthwork

(a) **Project Definition.** The project designer contacts and meets with the RME, and the OSC Geotechnical Branch as needed, at the project site to conduct a field review to help identify the geotechnical issues for the project.

In general, if soil/rock conditions are poor and/or large cuts or fills are anticipated, the RME requests that the OSC Geotechnical Branch participate in the field review and reporting efforts.

The designer provides a description and location of the proposed earthwork to the RME.

- For widening of existing facilities, the anticipated width, length, and location of the widening, relative to the current facility, are provided.
- For realignments, the approximate new location proposed for the facility is provided.
- Locations in terms of length can be by mile post or stations.

A brief conceptual level report is provided to the designer that summarizes the results of the investigation.

(b) **Project Design.** Geotechnical data necessary to allow completion of the PS&E level design is compiled during the design phase. This includes soils borings, testing, and final geometric data. Detailed design of cut and fill slopes can be done once the roadway geometry is established and geotechnical data is available. The purpose of this design effort is to determine the maximum stable cut or fill slope and, for fills, potential for short and long term settlement. Also, the usability of the cut materials and the type of borrow needed for the project, if any, is evaluated. Evaluate the use of soil bioengineering as an option for building steeper slopes or to prevent surface erosion. See the Chapter 1350 - Soil Bioengineering for more information.

The designer requests a geotechnical report from the RME. The site data indicated in 510.04(4), as applicable, is provided. It is important that the request for the geotechnical report be made as early in the design phase as practical. Cost and schedule requirements to generate the report are project specific and can vary widely. The time required to obtain permits and rights of entry

must be considered when establishing schedule requirements.

The RME, in conjunction with the OSC Geotechnical Branch, provides the following information as part of the geotechnical report (as applicable):

1. General description of the regional and site geology
2. Summary of the investigation
3. Boring logs
4. Laboratory tests and results
5. Soil/rock unit descriptions
6. Ground water conditions
7. Embankment design recommendations
   - The slope required for stability
   - Estimated amount and rate of settlement
   - Stability and settlement mitigation requirements
   - Construction staging requirements
   - Effects of site constraints
   - Monitoring needs
   - Material and compaction requirements
   - Subgrade preparation
8. Cut design recommendations
   - The slope required for stability
   - Stability mitigation requirements (deep seated stability and erosion)
   - Identification of seepage areas and how to mitigate them
   - Effects of site constraints
   - Monitoring requirements
   - Usability of excavated cut material, including gradation, moisture conditions and need for aeration, and shrink/swell characteristics

The recommendations include the background regarding analysis approach and any agreements with the region or other customers regarding the definition of acceptable level of risk.

The project office uses the report to finalize design decisions for the project. To meet slope stability requirements, additional right of way might be required or a wall might be needed. Wall design is covered in Chapter 1130. Construction timing might require importing material rather than using cut materials. The report is used to address this and other constructibility issues. The report is also used to proceed with completion of the project PS&E design.

(c) **PS&E Development.** Adequate geotechnical design information to complete the PS&E is typically received during project design. Additional geotechnical work might be needed when right of way cannot be acquired, restrictions are included in permits, or other requirements are added that result in changes in the design.

Special provisions and plan details, if not received as part of the report provided during project design, are developed with the assistance of the RME or the OSC Geotechnical Branch. The project designer uses this information, as well as the design phase report, to complete the PS&E documents. Both the region's Materials Section and the OSC Geotechnical Branch can review the contract plans before the PS&E review process begins, if requested. Otherwise, they will review the contract plans during the normal PS&E review process.

(7) Hydraulic Structures and Environmental Mitigation

(a) **Project Definition.** The designer provides a description and location of the proposed hydraulic/environmental improvements and other pertinent site information, and discusses the extent of the hydraulics and environmental improvements, with both the RME and the Hydraulics Sections, to identify the geotechnical issues to be investigated. At this stage, only the identification and feasibility of the proposed hydraulic structures or environmental mitigation are investigated. The cost and schedule require-

ments for the geotechnical investigation are also determined at this time.

Examples of hydraulic structures include, but are not limited to, large culverts, pipe arches, underground detention vaults, and fish passage structures. Examples of environmental mitigation include, but are not limited to, detention/retention ponds and wetland creation.

(b) **Project Design.** The designer requests a geotechnical report from the RME. The site data indicated in 510.04(4), as applicable, is provided along with the following information:

- Pertinent field observations (such as unstable slopes, existing soft soils or boulders, or erosion around and damage to existing culverts or other drainage structures).
- Jurisdictional requirements for geotechnical design of berms/dams.

It is important that the request for the geotechnical report be made as early in the design phase as practical. Cost and schedule requirements to generate the report are project specific and can vary widely. The time required to obtain permits and rights of entry must be considered when establishing schedule requirements.

The RME, with support from the OSC Geotechnical Branch as needed, provides the following information, when requested and where applicable, as part of the project geotechnical report:

- Soil boring logs.
- Soil pH and resistivity.
- Water table elevation.
- Soil infiltration rates (highest rate for assessing spill containment/aquifer protection and long-term rate for determining pond capacity).
- Bearing capacity and settlement for hydraulic structure foundations.
- Slope stability for ponds.
- Retention berm/dam design.
- Potential for and amount of differential settlement along culverts and pipe arches and the estimated time required for settlement to occur.
- Soil pressures and properties (primarily for underground detention vaults).
- Erosion potential.
- Geosynthetic design per Chapter 530.
- Recommendations for mitigation of the effect of soft or unstable soil on the hydraulic structures.
- Recommendations for construction.

Note that retaining walls that are part of a pond, fish passage, and the like, are designed per Chapter 1130.

The project designer uses the geotechnical information to:

- Finalize design decisions.
- Evaluate and mitigate environmental issues.
- Proceed with completion of the PS&E design (includes determining the most cost effective hydraulic structure/pond to meet the desired objectives, locating and sizing ponds and foundations for hydraulic structures, structural design, mitigating the effects of settlement, satisfying local jurisdictional requirements for design, and so forth).

(c) **PS&E Development.** During PS&E development, the designer uses the information provided in the geotechnical report as follows:

- Select pipe materials in accordance with corrosion, resistivity, and abrasion guidelines in the *Hydraulics Manual*.
- Consider and include construction recommendations.

Additional design and specification guidance and support from the RME or the OSC Geotechnical Branch are sought as needed. Both sections provide careful review of the contract plans before the PS&E review process begins, if requested. Otherwise, they will review the contract plans during the normal PS&E review process.

(8) Signals, Sign Bridges, Cantilever Signs, and Luminaire Foundations

(a) **Project Definition and Design.** Geotechnical information is usually not required for signals, sign bridges, cantilever signs, and luminaires during project definition.

The region's Traffic Office contacts the RME for conceptual foundation recommendations. The conceptual recommendations are based on existing information in the area, and identify if Standard Plan foundations are feasible or if special design foundations are required. If good soils are anticipated or the foundations will be placed in fill, Standard Plan foundations can be assumed. If special design foundations are required, additional time and money can be included in the project to accommodate increased field exploration for foundation design, OSC Geotechnical Branch involvement, and structural design by the Bridge and Structures Office.

(b) **PS&E Development.** Foundation recommendations are made by either the RME or the OSC Geotechnical Branch. The recommendations provide all necessary geotechnical information to complete the PS&E.

The region's Traffic Office (or region's Project Engineer in some cases) is responsible for delivering the following project information to the region's Materials Engineer:

- Plan sheet showing the location of the structures (station and offset) and the planned structure type.
- Applicable values for: XYZ, strain pole class, sign bridge span length, luminaire height, variable message sign weight, wind load, CCTV pole height, and known utility information in the area.

The RME provides the following information to the requester if Standard Plan foundation types can be used:

- Allowable lateral bearing capacity of the soil.
- Results of all field explorations.
- Groundwater elevation.
- Foundation constructibility.

The region uses this information to complete the plan sheets and prepare any special provisions. If utilities are identified during the field investigation that could conflict with the foundations, the region's project office pursues moving or accommodating the utility. Accommodation could require special foundation designs.

If special designs are required, the RME notifies the requester that special designs are required and forwards the information received from the region to the Geotechnical Branch. The Geotechnical Branch provides the Bridge and Structures Office with the necessary geotechnical recommendations to complete the foundation designs. The region coordinates with the Bridge and Structures Office to ensure that they have all the information necessary to complete the design. Depending on the structure type and complexity, the Bridge and Structures Office might produce the plan sheets and special provisions for the foundations, or they might provide the region with information so that the region can complete the plan sheets and special provisions.

(9) Buildings, Park and Ride Lots, Rest Areas, and Communication Towers

In general, the RME functions as the clearing house for the geotechnical work to be conducted in each of the phases for technical review of the work if the work is performed by consultants, or for getting the work done in-house. For sites and designs that are more geotechnically complex, the RME contacts the OSC Geotechnical Branch for assistance.

Detailed geotechnical investigation guidance is provided in Facilities Operating Procedure 9-18, "Site Development." In summary, this guidance addresses the following phases of design:

(a) **Site Selection.** Conceptual geotechnical investigation (based on historical data and minimal subsurface investigation) of several alternative sites is performed in which the geotechnical feasibility of each site for the intended use is evaluated, allowing the sites to be ranked. In this phase, geological hazards (landslides, rockfall, compressible soils, liquefaction,

and so forth) are identified, and geotechnical data adequate to determine a preliminary cost to develop and build on the site is gathered.

(b) **Schematic Design.** For the selected site, the best locations for structures, utilities, and other elements of the project are determined based on site constraints and ground conditions. In this phase, the site is characterized more thoroughly than in the site selection phase, but subsurface exploration is not structure specific.

(c) **Design Development.** The final locations of each of the project structures, utilities, and other project elements determined from the schematic design phase are identified. Once these final locations are available, a geotechnical investigation adequate to complete the final design of each of the project elements (structure foundations, detention/retention facilities, utilities, parking lots, roadways, site grading, and so forth) is conducted. From this investigation and design, the final PS&E is developed.

(10) Retaining Walls, Reinforced Slopes, and Noise Walls

(a) **Project Definition.** The designer provides a description and location of the proposed walls or reinforced slopes, including the potential size of the proposed structures and other pertinent site information, to the RME. At this stage, only the identification and feasibility of the proposed walls or reinforced slopes are investigated. A field review may also be conducted at this time as part of the investigation effort. In general, if soil/rock conditions are poor and/or large walls or reinforced slopes are anticipated, the RME requests that the OSC Geotechnical Branch participate in the field review and reporting efforts. The cost and schedule requirements for the geotechnical investigation are also determined at this time.

A brief conceptual level report that summarizes the results of the investigation may be provided to the designer at this time, depending on the complexity of the geotechnical issues.

(b) **Project Design and PS&E Development**. Geotechnical data necessary to allow completion of the PS&E level design for walls and reinforced slopes are compiled during the design and PS&E development phases. This includes soils borings, testing, and final geometric data. Detailed design of walls and reinforced slopes can be done once the roadway geometry is established and geotechnical data are available. The purpose of this design effort is to determine the wall and slope geometry needed for stability, noise wall and retaining wall foundation requirements, and the potential for short- and long-term settlement.

The designer requests a geotechnical report from the RME for retaining walls, noise walls, and reinforced slopes that are not part of the bridge preliminary plan. For walls that are part of the bridge preliminary plan, the Bridge and Structures Office requests the geotechnical report for the walls from the OSC Geotechnical Branch. For both cases, see Chapter 1130 for the detailed design process for retaining walls and reinforced slopes and Chapter 1140 for the detailed design process for noise walls. It is important that requests for a geotechnical report be made as early in the design phase as practical. The time required to obtain permits and rights of entry must be considered when establishing schedule requirements.

For retaining walls and reinforced slopes, the site data to be provided with the request for a geotechnical report are as indicated in Chapter 1130. Also supply right of entry agreements and permits required for the geotechnical investiagion. The site data indicated in 510.04(4), as applicable, are provided for noise walls.

The RME or the OSC Geotechnical Branch (see Chapter 1130 or 1140 for specific responsibilities for design), provides the following information as part of the geotechnical report (as applicable):

1. General description of the regional and site geology
2. Summary of the investigation
3. Boring logs
4. Laboratory tests and results
5. Soil/rock unit descriptions
6. Ground water conditions

7. Retaining wall/reinforced slope and noise wall recommendations

- Recommended geometry for stability
- Stability and settlement mitigation requirements, if needed
- Foundation type and capacity
- Estimated amount and rate of settlement
- Design soil parameters
- Construction staging requirements
- Effects of site constraints
- Monitoring needs
- Material and compaction requirements
- Subgrade preparation

The recommendations may also include the background regarding analysis approach and any agreements with the region or other customers regarding the definition of acceptable level of risk. Additional details and design issues to be considered in the geotechnical report are as provided in Chapter 1130 for retaining walls and reinforced slopes and in Chapter 1140 for noise walls. The project designer uses this information for final wall/reinforced slope selection and to complete the PS&E.

For final PS&E preparation, special provisions and plan details (if not received as part of the report provided during project design) are developed with the assistance of the region Materials Section or the OSC Geotechnical Branch. Both the region Materials Section and the OSC Geotechnical Branch can review the contract plans before the PS&E review process begins, if requested. Otherwise, they will review the contract plans during the normal PS&E review process.

(11) Unstable Slopes

Unstable slope mitigation includes the stabilization of known landslides and rockfall that occur on slopes adjacent to the WSDOT transportation system, and that have been programmed under the P3 unstable slope program.

(a) **Project Definition.** The region's project office provides a description and location of the proposed unstable slope mitigation work to the RME. Location of the proposed work can be mile post limits or stationing. The region's project designer meets at the project site with the RME and the OSC Geotechnical Branch to conduct a field review, discuss project requirements, and to identify geotechnical issues associated with the unstable slope project. The RME requests that the OSC Geotechnical Branch participate in the field review and project definition reporting.

The level of work in the project definition phase for unstable slopes is conceptual in nature, not final design. The geotechnical investigation generally consists of a field review, a more detailed assessment of the unstable slope, review of the conceptual mitigation developed during the programming phase of the project, and proposed modification (if any) to the original conceptual level unstable slope mitigation. The design phase geotechnical services cost and schedule, including any required permits, are determined at this time. A brief conceptual level report is provided to the project designer that summarizes the results of the project definition investigation.

(b) **Project Design.** Geotechnical information and field data necessary to complete the unstable slope mitigation design is compiled during this design phase. This work includes, depending on the nature of the unstable slope problem, test borings, rock structure mapping, geotechnical field instrumentation, laboratory testing, and slope stability analysis. The purpose of this design effort is to determine the most appropriate method (s) to stabilize the known unstable slope.

The designer requests a geotechnical report from the OSC Geotechnical Branch through the RME. The site data indicated in 510.04(4), as applicable, is provided along with the following information:

- Plan sheet showing the station and location of the proposed unstable slope mitigation project.
- If requested, Digital Terrain Model (DTM) files necessary to define the on-ground

topography of the project site. The limits of the DTM will have been defined during the project definition phase.

It is important that the request for the geotechnical report be made as early in the design phase as practical. Cost and schedule requirements to generate the report are project specific and can vary widely. Unstable slope design investigations might require geotechnical monitoring of ground movement and ground water over an extended period of time to develop the required field information for the unstable slope mitigation design. The time required to obtain rights of entry and other permits, as well as the long-term monitoring data, must be considered when establishing schedule requirements for the geotechnical report.

The OSC Geotechnical Branch provides the following information as part of the project geotechnical report (as applicable):

- General site description and summary of site geology.
- Summary of the field investigation.
- Boring logs.
- Laboratory tests and results.
- Geotechnical field instrumentation results.
- Summary of the engineering geology of the site including geologic units encountered.
- Unstable slope design analysis and mitigation recommendations.
- Constructibility issues associated with the unstable slope mitigation.
- Appropriate special provisions for inclusion in the contact plans.

The region's project design office uses the geotechnical report to finalize the design decisions for the project and the completion of the PS&E design.

(c) **PS&E Development.** Adequate geotechnical design information to complete the PS&E is typically obtained during the project design phase. Additional geotechnical work might be needed when right of way cannot be acquired, restrictions are included in permits, or other requirements are added that result in changes to the design.

Special provisions, special project elements, and design details (if not received as part of the design phase geotechnical report) are developed with the assistance of the RME and the OSC Geotechnical Branch. The region's project designer uses this information in conjunction with the design phase geotechnical report to complete the PS&E document. The RME and the OSC Geotechnical Branch can review the contract plans before the PS&E review begins, if requested. Otherwise, they will review the contract plans during the normal PS&E review process.

(12) Rockslope Design

(a) **Project Definition.** The region's project office provides a description and location of the proposed rock excavation work to the RME. For widening of existing rock cuts, the anticipated width and length of the proposed cut in relationship to the existing cut are provided. For new alignments, the approximate location and depth of the cut are provided. Location of the proposed cut(s) can be mile post limits or stationing. The project designer meets at the project site with the RME and the OSC Geotechnical Branch to conduct a field review, discusses project requirements, and identify any geotechnical issues associated with the proposed rock cuts. The RME requests that the OSC Geotechnical Branch participate in the field review and project definition reporting.

The level of rock slope design work for the project definition phase is conceptual in nature. The geotechnical investigation generally consists of the field review, review of existing records, an assessment of existing rockslope stability, and preliminary geologic structure mapping. The focus of this investigation is to assess the feasibility of the rock cuts for the proposed widening or realignment, not final design. A brief conceptual level report that summarizes the result of the

project definition investigation is provided to the project designer.

(b) **Project Design.** Detailed rockslope design is done once the roadway geometrics have been established. The rockslope design cannot be finalized until the roadway geometrics have been finalized. Geotechnical information and field data necessary to complete the rockslope design are compiled during this design phase. This work includes rock structure mapping, test borings, laboratory testing, and slope stability analysis. The purpose of this design effort is to determine the maximum stable cut slope angle, and any additional rockslope stabilization measures that could be required.

The designer requests a geotechnical report from the OSC Geotechnical Branch through the RME. The site data indicated in 510.04(4), as applicable, is provided.

It is important that the request for the geotechnical report be made as early in the design phase as practical. Cost and schedule requirements to generate the report are project specific and can vary widely. The time required to obtain permits and rights of entry must be considered when establishing schedule requirements.

The OSC Geotechnical Branch provides the following information as part of the project geotechnical report (as applicable):

1. General site description and summary of site geology.

2. Summary of the field investigation.

3. Boring logs.

4. Laboratory tests and results.

5. Rock units encountered within the project limits.

6. Rock slope design analysis and recommendations.

- Type of rockslope design analysis conducted and limitation of the analysis. Also included will be any agreements with the region and other customers regarding the definition of acceptable risk
- The slope(s) required for stability
- Additional slope stabilization requirements (rock bolts, rock dowels, and so forth.)
- Rockslope ditch criteria (See Chapter 640)
- Assessment of rippability
- Blasting requirements including limitations on peak ground vibrations and air blast overpressure, if required
- Usability of the excavated material including estimates of shrink and swell
- Constructibility issues associated with the rock excavation

The project office uses the geotechnical report to finalize the design decisions for the project, and the completion of the PS&E design for the rockslope elements of the project.

(c) **PS&E Development.** Adequate geotechnical design information to complete the PS&E is typically obtained during the project design phase. Additional geotechnical work might be needed when right of way cannot be acquired, restrictions are included in permits, or other requirements are added that result in change to the design.

Special provisions, special blasting requirements, and plans details, if not received as part of the design phase geotechnical report, are developed with the assistance of the RME or the OSC Geotechnical Branch. The project designer uses this information in conjunction with the design phase geotechnical report to complete the PS&E documents. The RME and the OSC Geotechnical Branch review the contract plans before the PS&E review begins, if requested. Otherwise, they will review the contract plans during the normal PS&E review process.

(13) Bridge Foundations

(a) **Project Definition.** The OSC Geotechnical Branch supports the project definition process to develop reasonably accurate estimates of bridge substructure costs. For major projects and for projects that are located in areas with little or no existing geotechnical information, a field review

is recommended. The region's office responsible for project definition coordinates field reviews. Subsurface exploration (drilling) is usually not required at this time, but might be needed if cost estimates cannot be prepared within an acceptable range of certainty.

The Bridge and Structures Office, once they have received the necessary site data from the region's project office, is responsible for delivering the following project information to the OSC Geotechnical Branch:

- Alternative alignments and/or locations of bridge structures.
- A preliminary estimate of channelization (structure width).
- Known environmental constraints.

The Bridge and Structures and region offices can expect to receive the following from the OSC Geotechnical Branch:

- Summary or copies of existing geotechnical information.
- Identification of geotechnical hazards (slides, liquefiable soils, soft soil deposits, and so forth.).
- Identification of permits that might be required for subsurface exploration (drilling).
- Conceptual foundation types and depths.
- If requested, an estimated cost and time to complete a geotechnical foundation report.

The Bridge Office uses this information to refine preliminary bridge costs. The region's project office uses the estimated cost and time to complete a geotechnical foundation report to develop the project delivery cost and schedule.

(b) **Project Design.** The OSC Geotechnical Branch assists the Bridge and Structures Office with preparation of the bridge Preliminary Plan. Geotechnical information gathered for project definition will normally be adequate for this phase, as test holes for the final bridge design cannot be drilled until accurate pier location information is available. For selected major projects, a type, size, and location (TS&L) report might be prepared which usually requires some subsurface exploration to provide a more detailed, though not final, estimate of foundation requirements.

The Bridge Office is responsible for delivering the following project information, based on bridge site data received from the region's project office, to the OSC Geotechnical Branch:

- Anticipated pier locations
- Approach fill heights
- For TS&L, alternate locations/alignments/ structure types

The Bridge Office can expect to receive:

- Conceptual foundation types, depths and capacities
- Permissible slopes for bridge approaches
- For TS&L, a summary of site geology and subsurface conditions, and more detailed preliminary foundation design parameters and needs
- If applicable or requested, erosion or scour potential

The Bridge Office uses this information to complete the bridge preliminary plan. The region's project office confirms right of way needs for approach embankments. For TS&L, the geotechnical information provided is used for cost estimating and preferred alternate selection. The preliminary plans are used by the OSC Geotechnical Branch to develop the site subsurface exploration plan.

(c) **PS&E Development.** During this phase, or as soon as a 95 percent preliminary plan is available, subsurface exploration (drilling) is performed and a geotechnical foundation report is prepared to provide all necessary geotechnical recommendations needed to complete the bridge PS&E.

The Bridge Office is responsible for delivering the following project information to the OSC Geotechnical Branch:

- 95 percent preliminary plans (concurrent with distribution for region approval)
- Estimated foundation loads and allowable settlement criteria for the structure, when requested

The Bridge Office can expect to receive:

- Bridge geotechnical foundation report

The Bridge and Structures Office uses this information to complete the bridge PS&E. The region's project office reviews the geotechnical foundation report for construction considerations and recommendations that might affect region items, estimates, staging, construction schedule, or other items.

Upon receipt of the structure PS&E review set, the OSC Geotechnical Branch provides the Bridge and Structures Office with a Summary of Geotechnical Conditions for inclusion in Appendix B of the contract.

(14) Geosynthetics

See Chapter 530 for geosynthetic design guidance.

(15) Washington State Ferries Projects

(a) **Project Design.** The OSC Geotechnical Branch assists the Washington State Ferries (WSF) division with determining the geotechnical feasibility of all offshore facilities, terminal facility foundations, and bulkhead walls. For upland retaining walls and grading, utility trenches, and pavement design, the RME assists WSF with determining geotechnical feasibility.

In addition to the site data identified in Section 510.04(4), as applicable, the following information is supplied by WSF to the OSC Geotechnical Branch or the RME, as appropriate, with the request for the project geotechnical report::

- A plan showing anticipated structure locations as well as existing structures.
- Relevant historical data for the site.
- A plan showing utility trench locations.
- Anticipated utility trench depths.
- Proposed roadway profiles.

WSF can expect to receive:

- Results of any borings or laboratory tests conducted.
- A description of geotechnical site conditions.
- Conceptual foundation types, depths and capacities.
- Conceptual wall types.
- Assessment of constructibility issues that affect feasibility.
- Surfacing depths and/or pavement repair and drainage schemes.
- If applicable or requested, erosion or scour potential.

WSF uses this information to complete the project design report, design decisions, and estimated project budget and schedule.

WSF is responsible for obtaining any necessary permits or right of entry agreements needed to access structure locations for the purpose of subsurface exploration (for example, test hole drilling). The time required for obtaining permits and rights of entry must be considered when developing project schedules. Possible permits and agreements might include but are not limited to:

- City, county or local agency use permits.
- Sensitive area ordinance permits.

(b) **PS&E Development**

Subsurface exploration (drilling) is performed and a geotechnical foundation report is prepared to provide all necessary geotechnical recommendations needed to complete the PS&E.

The designer requests a geotechnical report from the OSC geotechnical branch or the RME, as appropriate. The site data indicated in 510.04(4), as applicable, is provided along with the following information:

- A plan showing final structure locations as well as existing structures.
- Proposed structure loadings.

WSF can expect to receive:

- Results of any borings or laboratory tests conducted.
- A description of geotechnical site conditions.
- Final foundation types, depths and capacities.
- Final wall types and geotechnical designs/ parameters for each wall.
- Assessment of constructibility issues to be considered in foundation selection and when assembling the PS&E.
- Pile driving information - driving resistance and estimated overdrive.
- Surfacing depths and/or pavement repair and drainage schemes.

WSF uses this information to complete the PS&E.

Upon receipt of the WSF PS&E review set, the OSC Geotechnical Branch provides WSF with a Summary of Geotechnical Conditions for inclusion in Appendix B of the Contract. A Final Geotechnical Project Documentation package is assembled by the OSC Geotechnical Branch and sent to WSF or the Plans Branch, as appropriate, for reproduction and sale to prospective bidders.

510.05 Use of Geotechnical Consultants

The OSC Geotechnical Services Branch or the RME assists in developing the geotechnical scope and estimate for the project, so that the consultant contract is appropriate. (Consultant Services assists in this process.) A team meeting between the consultant team, the region or Washington State Ferries (depending on whose project it is), and the OSC Geotechnical Services Branch/RME is conducted early in the project to develop technical communication lines and relationships. Good proactive communication between all members of the project team is crucial to the success of the project due to the complex supplier-client relationships.

510.06 Geotechnical Work by Others

Geotechnical design work conducted for the design of structures or other engineering works by other agencies or private developers within the right of way is subject to the same geotechnical engineering requirements as for engineering works performed by WSDOT. Therefore, the provisions contained within this chapter also apply in principle to such work. All geotechnical work conducted for engineering works within the WSDOT right of way or that otherwise directly impacts WSDOT facilities must be reviewed and approved by the OSC Geotechnical Services Branch or the RME.

510.07 Surfacing Report

Detailed criteria and methods that govern pavement rehabilitation can be found in *WSDOT Pavement Guide for Design, Evaluation and Rehabilitation*, Volume 1, pages 2-22 through 2-26. The RME provides the surfacing report to the region's project office. This report provides recommended pavement types, surfacing depths, pavement drainage recommendations, and pavement repair recommendations.

510.08 Documentation

(1) Design Documentation

When a project requires investigation of soils or surfacing materials, the results of the investigations are to be preserved in the project file. (See Chapter 330.) This includes all reports, forms, and attachments.

- ☐ Materials source report and approvals
- ☐ Geotechnical reports
- ☐ Surfacing report

(2) Final Geotechnical Project Documentation and Geotechnical Information Included as Part of the Construction Contract

Once a project PS&E is near completion, all of the geotechnical design memorandums and reports are compiled together to form the Final

Geotechnical Project Documentation, to be published for the use of prospective bidders. The detailed process for this is located in the *Plans Preparation Manual*.

Geotechnical information included as part of the contract generally consists of the final project boring logs, and, as appropriate for the project, a Summary of Geotechnical Conditions. Both of these items are provided by the OSC Geotechnical Services Branch.

P65:DP/DMM

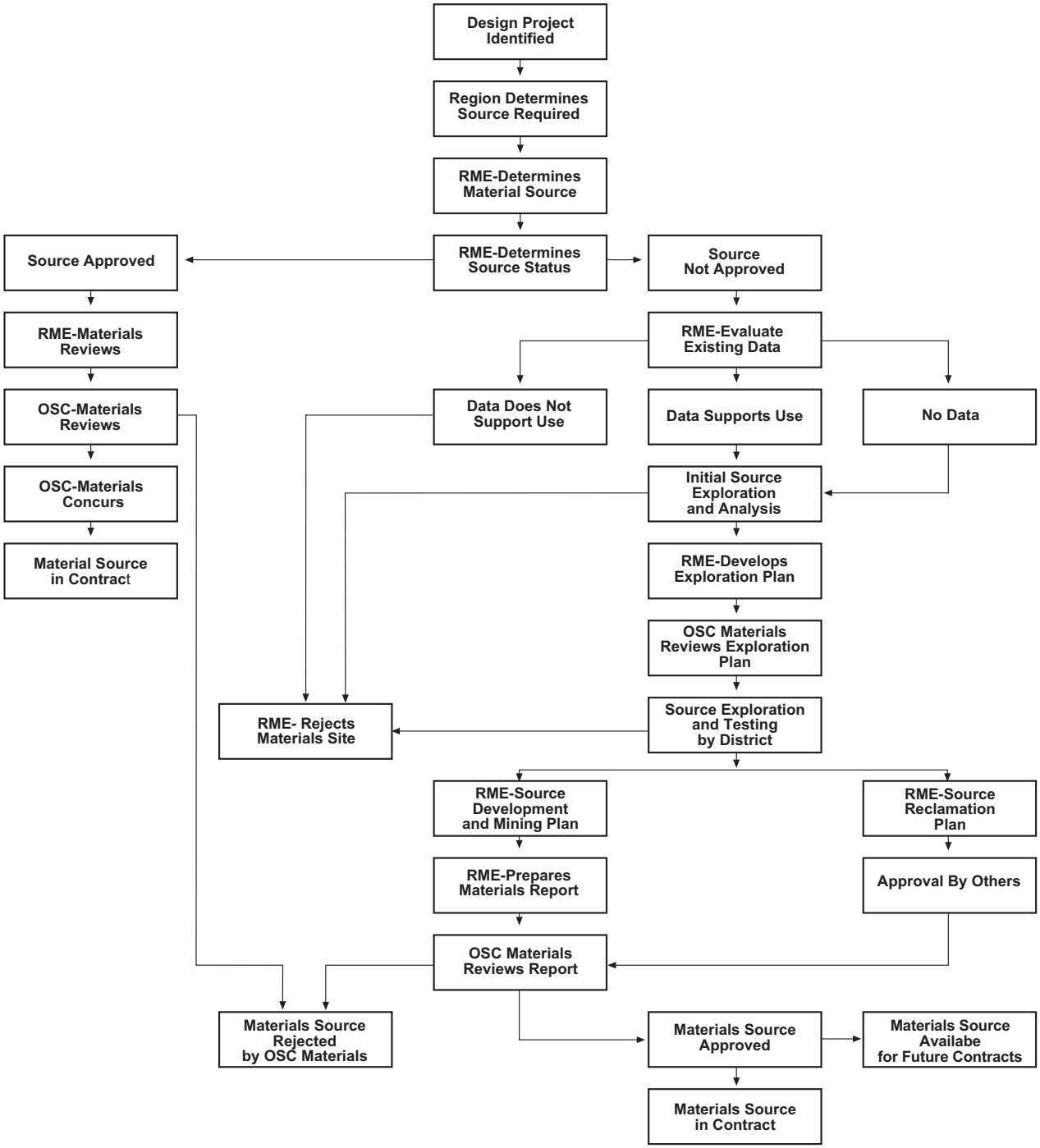

Material Source Development Plan
Figure 510-1

Unit Dry Weight				
Type of Material	Truck Measure		Compacted on Roadway	
	kg/m³	T/m³	kg/m³	T/m³
Ballast	1850	1.85	2300	2.30
Crushed Surfacing Top Course	1700	1.70	2200	2.20
Crushed Surfacing Base Course	1750	1.75	2200	2.20
Screened Gravel Surfacing			2200	2.20
**GraveL Base			2000 - 2250	2.00 - 2.25
Shoulder Ballast			1650	1.65
Maintenance Sand 10 mm - 0	1700	1.70		
Mineral Aggregate 51 mm - 25 mm	1550	1.55		
Mineral Aggregate 44 mm - 19 mm	1550	1.55		
Mineral Aggregate 40 mm - 19 mm	1500	1.50		
Mineral Aggregate 25 mm - 19 mm	1500	1.50		
Mineral Aggregate 19 mm - 13 mm	1400	1.40		
Mineral Aggregate 32 mm - 6 mm	1550	1.55		
Mineral Aggregate 25 mm - 6 mm	1550	1.55		
Mineral Aggregate 22 mm - 6 mm	1500	1.50		
Mineral Aggregate 19 mm - 6 mm	1500	1.50		
Mineral Aggregate 16 mm - 6 mm	1550	1.55		
Mineral Aggregate 13 mm - 6 mm or #4	1550	1.55		
Mineral Aggregate 6 mm or #4 - 0	1700	1.70		
Concrete Aggregate NO. 2 (32 mm - #4)	1800	1.80		
Concrete Sand (Fine Aggregate)	1700	1.70		
Crushed Cover Stone	1700	1.70		

**2,200 kg/m³ (2.20 T/m³) is recommended as the most suitable factor; however, if the grading approaches the coarseness of ballast, the factor would approach 2,250 kg/m³ (2.25 T/m³), and if the grading contains more than 45% sand, the factor would decrease, approaching 2,000 kg/m³ (2.00 T/m³) for material that is essentially all sand.

Mineral Aggregate in Stockpile * (metric tons/km)								
Class	Pavement Compacted Depth	Agg. Size	Approx Mix Ratio	Roadway Width (m)				
	(mm)	(mm)	(%)	3.0	3.3	3.6	6.6	7.2
A & B	30	19 - 6	35	80	88	96	175	191
		6 - 0	65	148	163	177	325	355
D	12	12.5 - 0	100	91	100	109	200	218
E	30	32 - 6	50	114	125	136	250	273
		6 - 0	50	114	125	136	250	273
F	30	19 - 6	35	80	88	96	175	191
		6 - 0	65	148	163	177	325	355
G	30	10 - 0	100	227	250	273	500	546

* 94% by weight of complete mix (92.5% min - 96% max) {(75.8 kg/m²/30 mm = 2.53 T/m³)}

Includes 10% handling loss.

Mineral filler 1% of wearing course for Class B.

General Notes

Weights shown are dry weights and corrections are required for water contents.

The tabulated weights for the materials are reasonably close; however, corrections should be applied in the following order:

For specific gravity:

$$\text{Wt.} = \frac{\text{tabular wt. x specific gravity on surface report}}{2.65}$$

For water content:

Wt. = tabular wt. x (1 + free water % in decimals)

Required quantities should be increased by 10 percent to allow for waste if they are to be stockpiled.

Attention should be directed to the inclusion of crushed surfacing top course material that may be required for keystone when estimating quantities for projects having ballast course.

Estimating — Miscellaneous Tables

Figure 520-1

General Data [1 2 3]							
Asphalt Concrete Pavement							
Complete Mix							
Class of Mix	Depth (mm)	Spread Per sq. m kg	Spread Per sq. m T	m^2 per T	T/km Width (m) 3.0	T/km Width (m) 3.3	T/km Width (m) 3.6
A, B, E, F & G	30	73.2	0.073	13.67	219	241	263
D	12	24.0	0.024	41.62	72	79	86

Primecoats and Tackcoats														
Asphalt							Aggregate [4]							
Application	Type of Asphalt[5]	Application liters[6] per m^2	T per m^2	T/km Width (m) 3.0	T/km Width (m) 3.3	T/km Width (m) 3.6	Application kg per m^2	T/km Width (m) 3.0	T/km Width (m) 3.3	T/km Width (m) 3.6	m^3 per m^2	m^3/km WIDTH (m) 3.0	m^3/km WIDTH (m) 3.3	m^3/km WIDTH (m) 3.6
Prime Coat	MC-250	1.13	0.001089	3.3	3.6	3.9	16.3	49	54	59	0.0096	29	32	35
Tack Coat	CSS-1	0.23	0.000226	0.7	0.7	0.8								
Class D Tack Coat	CSS-1	0.45	0.000452	1.4	1.5	1.6								
Fog Seal	CSS-1	0.18	0.000181	0.5	0.6	0.7								
Total	CSS-1	0.63	0.000634	1.9	2.1	2.3								

Specific Data [1 2 3]

Asphalt Concrete Paving Quantities (metric tons/km)*

Width (m)	Depth of Pavement (mm) 30	45	60	75	90	105	120	135	150	165	180	195	210	225
1.2	88	132	176	220	264	307	351	395	439	483	527	571	615	659
1.8	132	198	264	329	395	461	527	593	659	725	791	856	922	988
2.4	176	264	351	439	527	615	703	791	878	966	1054	1142	1230	1318
3.0	220	329	439	549	659	769	878	988	1098	1208	1318	1427	1537	1647
3.3	242	362	483	604	725	845	966	1087	1208	1329	1449	1570	1691	1812
3.6	264	395	527	659	791	922	1054	1186	1318	1449	1581	1713	1845	1976
6.6	483	725	966	1208	1449	1691	1932	2174	2416	2657	2899	3140	3382	3623
7.2	527	791	1054	1318	1581	1845	2108	2372	2635	2899	3162	3426	3689	3953

*Based on 73.2 kg/ m^2 of 30 mm compacted depth = 2.44 T/m^3

[1]The specific gravity of the aggregate will affect the weight of aggregate in the completed mix.

[2]The percentage of fine mineral in the coarse aggregate will affect the ratio of course to fine. If the coarse aggregate produced contains an excessive amount of fines (6 mm to 0), the percentage of coarse aggregate should be increased and the fines decreased accordingly.

[3]Quantities shown do not provide for widening, waste from stockpile, or thickened edges.

[4]See miscellaneous tables for the average weights of mineral aggregates used in calculation of the data.

[5]The column "Type of Asphalt" is shown for the purpose of conversion to proper weights for the asphalt being used and does not imply that the particular grade shown is required for the respective treatment.

[6]Quantities shown are retained asphalt.

Estimating — Asphalt Concrete Pavement and Asphalt Distribution Tables

Figure 520-2a

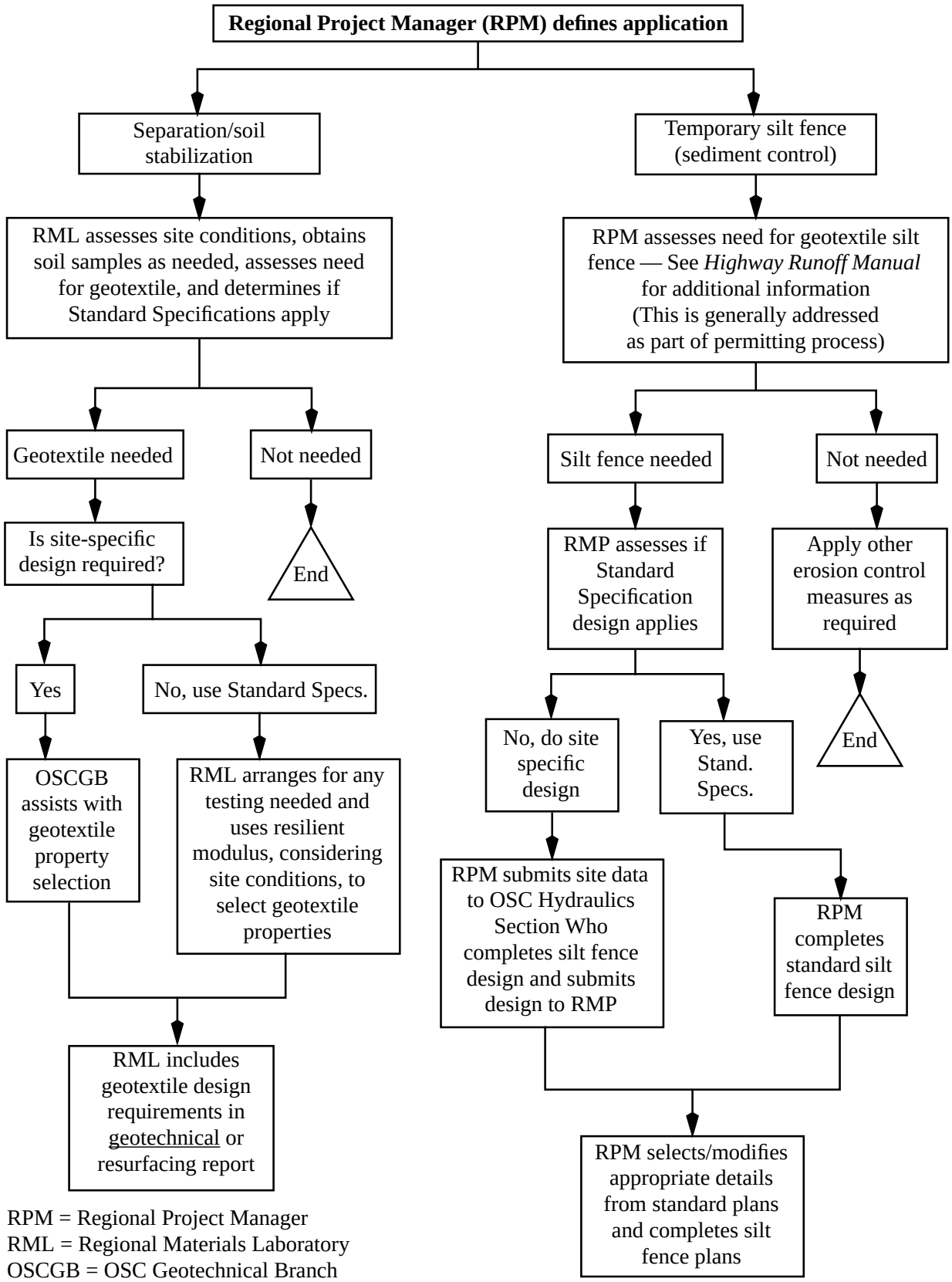

Design Process for Separation, Soil Stabilization, and Silt Fence
Figure 530-5

620 Geometric Plan Elements

620.01 General
620.02 References
620.03 Definitions
620.04 Horizontal Alignment
620.05 Distribution Facilities
620.06 Number of Lanes and Arrangement
620.07 Pavement Transitions
620.08 Procedures
620.09 Documentation

620.01 General

This chapter provides guidance on the design of horizontal alignment, frontage roads, number of lanes, the arrangement of the lanes, and pavement transitions. See the following chapters for additional information:

Chapter	Subject
430	All roadway width requirements for modified design level
440	Lane and shoulder width requirements for full design level
640	Open highway and ramp lane widths on turning roadways for full design level
640	Superelevation rate and transitions
650	Sight distance
910	Shy distance requirements for curbs and islands

620.02 References

Washington Administrative Code (WAC) 468-18-040, "Design standards for rearranged county roads, frontage roads, access roads, intersections, ramps and crossings"

Utilities Manual, M 22-87, WSDOT

Plans Preparation Manual, M 22-31, WSDOT

Manual on Uniform Traffic Control Devices for Streets and Highways (MUTCD), USDOT, FHWA; including the *Washington State Modifications to the MUTCD*, M 24-01, WSDOT

Right of Way Manual, M 26-01, WSDOT

Local Agency Guidelines (LAG), M 36-63, WSDOT

A Policy on Geometric Design of Highways and Street, 1994, AASHTO

620.03 Definitions

auxiliary lane The portion of the roadway adjoining the traveled way for parking, speed change, turning, storage for turning, weaving, truck climbing, passing, and other purposes supplementary to through-traffic movement

basic number of lanes The minimum number of general purpose lanes designated and maintained over a significant length of highway

frontage road An auxiliary road that is a local road or street located on the side of a highway for service to abutting property and adjacent areas and for control of access

outer separation The area between the outside edge of the through highway lanes and the inside edge of a frontage road

turning roadway A curve on an open highway, a curve on a ramp, or a connecting roadway between two intersecting legs of an intersection

620.04 Horizontal Alignment

(1) General

Horizontal and vertical alignments (Chapter 630) are the primary controlling elements for highway design. It is important to coordinate these two elements with design speed, drainage, intersection design, and aesthetic principles in the early stages of design.

Figures 620-1a and 1c show both desirable and undesirable alignment examples for use with the following considerations:

(a) Make the highway alignment as direct as possible and still blend with the topography while considering developed and undeveloped properties, community boundaries, and environmental concerns.

(2) Basic Number of Lanes

Keep the basic number of lanes constant over a highway route, or a significant portion thereof, regardless of changes in traffic volume. See Chapter 440 for the minimum number of lanes for each functional class of highway.

Change the basic number of lanes only for general changes in traffic volume over a substantial length of the route. The recommended location for a reduction in the basic number of lanes is on a tangent section between interchanges or intersections.

To accommodate high traffic volumes for short distances, such as between adjacent interchanges, use auxiliary lanes. When consecutive sections between interchanges require auxiliary lanes, consider increasing the basic number of lanes through the entire length.

(3) Auxiliary Lanes

Auxiliary lanes are added to the basic number of lanes to allow additional traffic movements on short segments. These added lanes are based primarily on volume-to-capacity relationships (Chapter 610).

To ensure efficient operation of auxiliary lanes see the following:

910	Left and right turn lanes and storage for turning
940	Weaving and auxiliary lanes associated with interchanges
1010	Truck climbing and passing lanes

620.07 Pavement Transitions

(1) Lane Transitions

To narrow a lane or to reduce the number of lanes, a transition is required. The following guidelines apply:

- Locate transitions where decision sight distance exists, preferably on a tangent section and on the approach side of any crest vertical curve (except the end of climbing lanes which are transitioned in accordance with Chapter 1010).
- Supplement the transition with traffic control devices.
- Reduce the number of lanes by dropping only one at a time from the right side in the direction of travel. (When dropping a lane on the left side, an approved deviation is required.) See the MUTCD when more than one lane in a single direction must be dropped.
- Use the following formula to determine the minimum length of the lane transition for high speed conditions (45 mph or more):

  $$L = VT$$

  Where:

  L = length of transition (m)
  V = design speed (mph)
  T = tangential offset width (m)

- Use a tangential rate of change of 1:25 or flatter for low speed conditions (less than 45 mph).

To widen a lane or to increase the number of lanes, a tangential rate of change in the range of 1:4 to 1:15 is sufficient. Aesthetics are the main consideration.

(2) Median Width Transitions

Whenever two abutting sections have different median widths, use long, smooth transitions (L = VT or flatter). When horizontal curves are present, this can be accomplished by providing the transition throughout the length of the curve. When required on a tangent section, the transition may be applied about the center line or on either side of the median based on whether or not the abutting existing section is programmed for the wider median in the future. To satisfy aesthetic requirements, make the transition length as long as feasible.

620.08 Procedures

When the project will realign the roadway, develop horizontal alignment plans for inclusion in the PS&E. Show the following as needed to maintain clarity and provide necessary information:

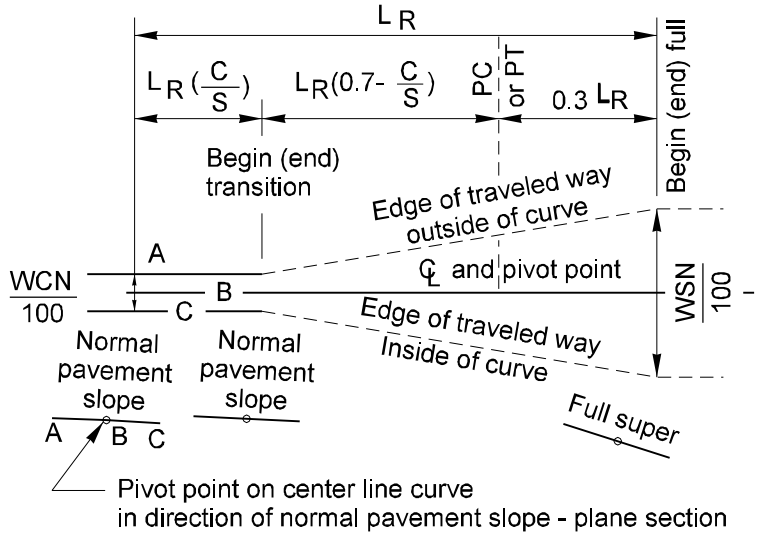

Design C[1]

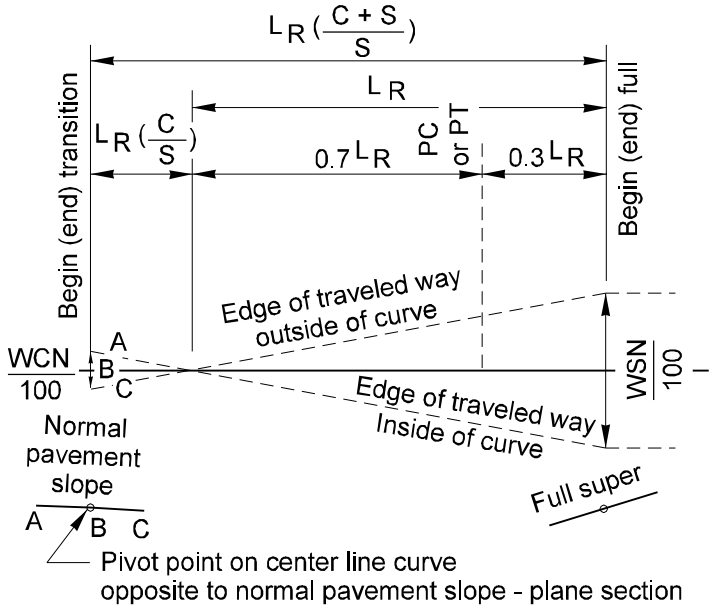

Design C[2]

C = Normal crown (%)
S = Superelevation rate (%)
N = Number of lanes between points
W = Width of lane

Superelevation Transitions for Highway Curves
Figure 640-13c

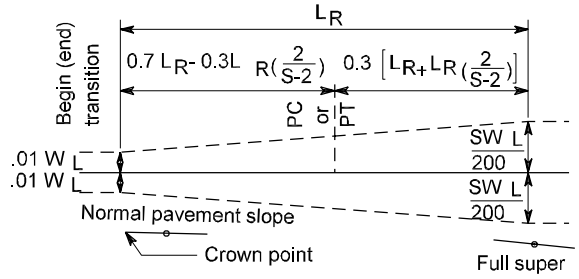

S	Length of transition in meters for Design Speed of:															
	20 mph		25 mph		30 mph		35 mph		40 mph		45 mph		50 mph		≥55 mph	
(%)	L_B	L_T	L_B	L_T	L_B	L_T	L_B	L_T	L_B	L_T	L_B	L_T	L_B	L_T	L_B	L_T
3	3	20	4	25	4	35	4	35	4	40	5	45	5	50	5	50
4	6	20	7	25	7	35	8	35	8	40	9	45	9	50	10	50
5	9	20	10	25	11	35	11	35	12	40	13	45	14	50	15	50
6	12	20	13	25	14	35	15	35	16	40	17	45	18	50	20	50
7	15	20	16	25	17	35	19	35	20	40	22	45	23	50	24	50
8	18	20	20	25	21	35	22	35	24	40	26	45	27	50	29	50
9	21	21	23	25	24	35	26	35	28	40	30	45	32	50	34	50
10	24	24	26	26	27	35	30	35	32	40	34	45	36	50	39	50

Table 1 Pivot Point on Center Line — Curve in Direction of Normal Pavement Slope

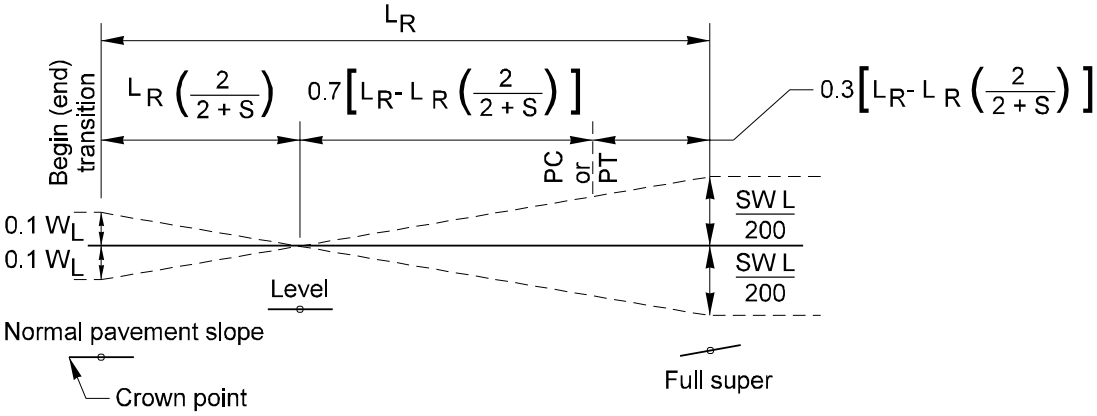

S	Length of transition in meters for Design Speed of:															
	20 mph		25 mph		30 mph		35 mph		40 mph		45 mph		50 mph		≥55 mph	
(%)	L_B	L_T	L_B	L_T	L_B	L_T	L_B	L_T	L_B	L_T	L_B	L_T	L_B	L_T	L_B	L_T
2	12	20	13	25	14	35	15	35	16	40	17	45	18	50	20	50
3	15	20	16	25	17	35	19	35	20	40	22	45	23	50	24	50
4	18	20	20	25	21	35	22	35	24	40	26	45	27	50	29	50
5	21	21	23	25	24	35	26	35	28	40	30	45	32	50	34	50
6	24	24	26	26	27	35	30	35	32	40	34	45	36	50	39	50
7	27	27	29	29	31	35	33	35	36	40	38	45	41	50	44	50
8	30	30	32	32	34	35	37	37	40	40	43	45	45	50	48	50
9	33	33	36	36	38	38	41	41	44	44	47	47	50	50	53	53
10	36	36	39	39	41	41	44	44	48	48	51	51	54	54	58	58

Table 2 Pivot Point on Center Line — Curve in Direction Opposite to Normal Pavement Slope

$L_R=L_B*(1+0.13889x)$ Where: x = width of lane greater than 4.5 m.

W_L = width of ramp lane

Superelevation Transitions for Ramp Curves

Figure 640-14a

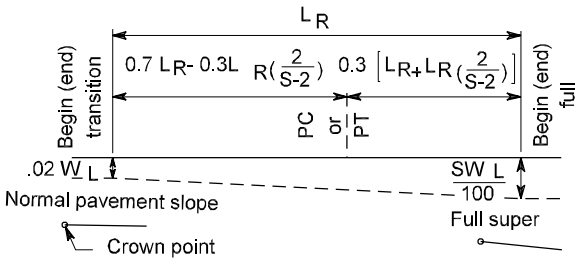

S	Length of transition in meters for Design Speed of:															
	20 mph		25 mph		30 mph		35 mph		40 mph		45 mph		50 mph		≥55 mph	
(%)	L_B	L_T	L_B	L_T	L_B	L_T	L_B	L_T	L_B	L_T	L_B	L_T	L_B	L_T	L_B	L_T
3	6	20	7	25	7	35	8	35	8	40	9	45	9	50	10	50
4	12	20	13	25	14	35	15	35	16	40	17	45	18	50	20	50
5	18	20	20	25	21	35	22	35	24	40	26	45	27	50	29	50
6	24	24	26	26	27	35	30	35	32	40	34	45	36	50	39	50
7	30	30	32	32	34	35	37	37	40	40	43	45	45	50	48	50
8	36	36	39	39	41	41	44	44	48	48	51	51	54	54	58	58
9	42	42	45	45	48	48	52	52	56	56	60	60	63	63	68	68
10	48	48	51	51	54	54	59	59	63	63	68	68	72	72	77	77

Table 3 Pivot Point on Edge of Lane — Curve in Direction of Normal Pavement Slope

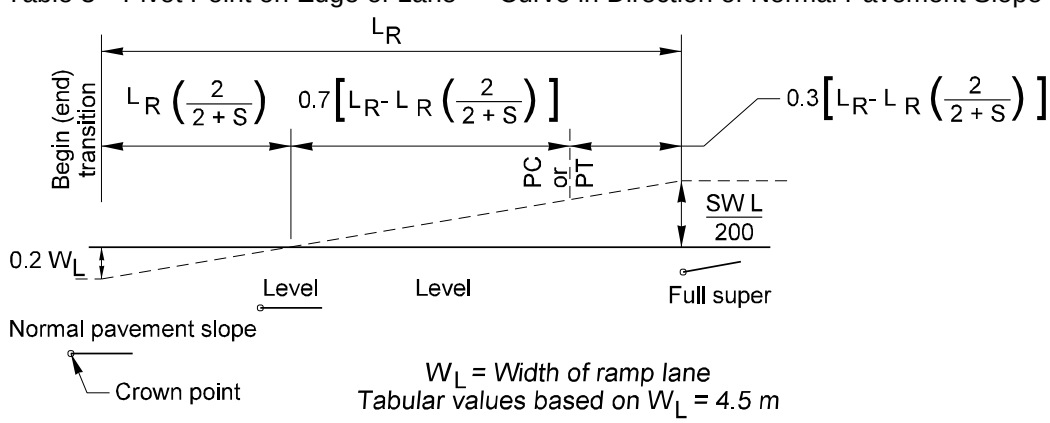

S	Length of transition in meters for Design Speed of:															
	20 mph		25 mph		30 mph		35 mph		40 mph		45 mph		50 mph		≥55 mph	
(%)	L_B	L_T	L_B	L_T	L_B	L_T	L_B	L_T	L_B	L_T	L_B	L_T	L_B	L_T	L_B	L_T
2	24	24	26	26	27	35	30	35	32	40	34	45	36	50	39	50
3	30	30	32	32	34	35	37	37	40	40	43	45	45	50	48	50
4	36	36	39	39	41	41	44	44	48	48	51	51	54	54	58	58
5	42	42	45	45	48	48	52	52	56	56	60	60	63	63	68	68
6	48	48	51	51	54	54	59	59	63	63	68	68	72	72	77	77
7	54	54	58	58	61	61	66	66	71	71	76	76	81	81	87	87
8	60	60	64	64	68	68	74	74	79	79	85	85	90	90	96	96
9	66	66	71	71	75	75	81	81	87	87	93	93	99	99	106	106
10	72	72	77	77	81	81	88	88	95	95	102	102	108	108	116	116

Table 4 Pivot Point on Edge of Lane — Curve in Direction Opposite to Normal Pavement Slope

$L_R=L_B*(1+0.13889x)$ Where: x = width of lane greater than 4.5 m.

W_L = width of ramp lane

Superelevation Transitions for Ramp Curves

Figure 640-14b

When a new crest vertical curve is built or an existing one is rebuilt, provide Design Stopping Sight Distance from Figure 650-2. An existing crest vertical curve with Existing Stopping Sight Distance from Figure 650-3 may remain in place.

(4) Sag Vertical Curves

Use Figure 650-8 to find the minimum length for a sag vertical curve when given the stopping sight distance and the algebraic difference in grades. The minimum length for a sag vertical curve can also be determined by multiplying the algebraic difference in grades by the K_S value from Figure 650-2 for design or 650-3 for existing ($L=K_S*A$). Both the figure and the equation give approximately the same length of curve. Neither the figure nor the equation uses the sight distance greater than the length of curve equation. When the sight distance is greater than the length of curve and the length of curve is critical, the S>L equation given on Figure 650-8 may be used to find the minimum length of curve.

When a new sag vertical curve is built or an existing one is rebuilt, provide Design Stopping Sight Distance from Figure 650-2. An existing sag vertical curve with Existing Stopping Sight Distance from Figure 650-3 may remain in place.

(5) Horizontal Curves

Use Figure 650-9 to check for adequate stopping sight distance where sight obstructions are on the inside of a curve. A stopping sight distance obstruction is any object 610 mm or greater above the roadway surface (such as median barrier, guardrail, bridges, walls, cut slopes, wooded areas, and buildings). Figure 650-9 (both the equation and the graph) are for use when the length of curve is greater than the sight distance and the sight restriction is more than half the sight distance from the end of the curve. When the length of curve is less than the stopping sight distance or the sight restriction is less than half the stopping sight distance into the curve, the desired sight distance may be available with a lesser M distance. When this occurs, the sight distance can be checked graphically.

Provide Design Stopping Sight Distance from Figure 650-2 for horizontal curves as follows:

- For all new roadways
- When the roadway is widened
- When there is an alignment shift
- For new features (such as median barrier, bridges, walls, or guardrail)
- When additional right of way is required for roadside improvements

When design stopping sight distance is not required, existing features that have Existing Stopping Sight Distance from Figure 650-3, may remain in place.

650.06 Decision Sight Distance

Decision sight distance values are greater than stopping sight distance values because they give the driver an additional margin for error and afford sufficient length to maneuver at the same or reduced speed rather than to just stop.

Provide decision sight distance where highway features create a likelihood for error in information reception, decision making, or control actions. Example highway features include interchanges and intersections; changes in cross section at toll plazas, drop lanes, etc.; and areas of concentrated demand where sources of information compete, as those from roadway elements, traffic, traffic control devices, and advertising signs. If possible, locate these highway features where decision sight distance can be provided. If this is not possible, use suitable traffic control devices and positive guidance to give advanced warning of the conditions.

Use the decision sight distances in Figure 650-5 where highway features require complex driving decisions.

anchor with the Weak Post Intersection Design. (See 710.06(4) Cases 12 and 13.) The Type 7 anchor is used to develop tensile strength in the middle of a guardrail run when the guardrail curves and weak posts are used. (See 710.06(4) cases 9, 12, and 13.)

Locations where crossroads and driveways cause gaps in the guardrail require special consideration. Elimination of the need for the barrier is the preferred solution. Otherwise, a barrier flare may be required to provide sight distance. If the slope is 1:2 or flatter and there are no hazards on or at the bottom of the slope, a terminal can be used to end the rail. Place the anchor of this installation as close as possible to the road approach radius PC. If there is a hazard at or near the bottom of the slope that cannot be mitigated, then the Weak Post Intersection Design (see 710.04(4) and the *Standard Plans*) can be used. This system can also be used at locations where a crossroad or road approach is near the end of a bridge and installing a standard bridge approach guardrail placement (guardrail transition and terminal) is not possible.

(e) **Evaluating Existing Terminals.** There are several older terminal designs that may be encountered on our highways. The predominant terminal on our highways is the Breakaway Cable Terminal (BCT). This system used a parabolic flare similar to the SRT with a Type 1 anchor. Type 1 anchor posts are wood set in a steel tube or a concrete foundation.

BCTs that have at least a 1 m offset may remain in place unless the guardrail run or anchor is being reconstructed or reset. (Raising the rail element is not considered reconstruction or resetting.) BCTs with less than a 1 m offset must be replaced.

Replace existing buried terminals that slope down such that the guardrail height is reduced to less than 600 mm.

Replace guardrail ends that do not have a crashworthy design with a crash worthy guardrail terminal. Common features of noncrashworthy designs are as follows:

- No cable anchor.
- A cable anchored into concrete in front of the first post.
- Second post not breakaway (CRT).
- Design A end section (Design C end sections are acceptable to be left in place).
- Beam guardrail on both sides of the posts (two sided).

The old Type 3 anchor, which was primarily used at bridge ends. (See Figure 710-5.) This anchor consisted of a steel pipe mounted vertically in a concrete foundation. Bridge approach guardrail was then mounted on the steel pipe. On one-way highways, these anchors were usually positioned so that neither the anchor nor the bridge rail posed a snagging hazard. In these cases, the anchor may remain in place if a stiffened transition section is provided at the connection to the post. On two-way highways the anchor may present a snagging hazard. In these cases, install a connection from the anchor to the bridge rail if the offset from the bridge rail to the face of the guardrail is 460 mm or less. If the offset is greater than 460 mm, remove the anchor and install a new transition and connection.

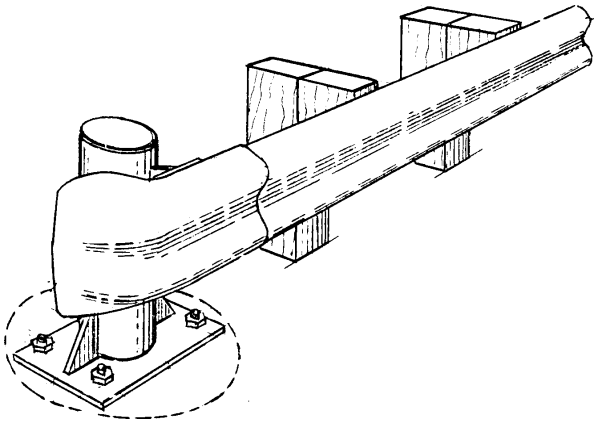

Old Type 3 Anchor
Figure 710-5

(3) Transitions and Connections

When there is an abrupt change from one barrier type to a more rigid barrier type, a vehicle hitting the more flexible barrier is likely to be caught in the deflected barrier pocket and directed into the more rigid barrier. This is commonly referred to as pocketing. A transition stiffens the more flexible barrier by decreasing the post spacing, increasing the post size, and using stiffer beam elements to eliminate the possibility of pocketing.

820.01 General
820.02 References
820.03 Design Components
820.04 Overhead Installation
820.05 Mileposts
820.06 Guide Sign Plan
820.07 Documentation

820.01 General

Signing is a primary mechanism for regulating, warning, and guiding traffic. Signing must be in place when any section of highway is open to the motoring public. Each highway project has unique and specific signing requirements. For statewide signing uniformity and continuity, it is sometimes necessary to provide signing beyond the project limits. Design characteristics of the facility determine the size and legend for a sign. As the design speed increases, larger sign sizes are necessary to provide adequate message comprehension time. The MUTCD, the *Traffic Manual*, and the *Sign Fabrication Manual* contain standard sign dimensions, specific legends, and reflective sheeting types for all new signs. Guide signing provides the motorist with guidance to destinations. This information is always presented in a consistent manner. In some cases, there are specific laws, regulations, and policies governing the content of the messages on these signs. All proposed guide signs for a project require the approval of the region's Traffic Engineer. The use of nonstandard signs is strongly discouraged and their use requires the approval of the State Traffic Engineer.

The Design Matrices identify the design levels for signing on all preservation and improvement projects. These levels are indicated in the column "Signing" for Interstate main line and the column "Signing, Delineation, and Illumination" for all other routes.

Review and update existing signing within the limits of all preservation and improvement projects as indicated in the matrices. Provide standard signing on projects with either a "B" (basic design level) or "EU" (evaluate upgrade) matrix designation by applying the following criteria to determine the need to replace or modify existing signs:

- Lack of nighttime retroreflectivity.
- Substantial damage, vandalism, or deterioration.
- Age of signs (seven to ten years old).
- A change in sign use policy.
- Improper location.
- Message or destination changes necessary to satisfy commitments to public or local agencies.
- Substandard mounting height.
- Change in jurisdiction, for example a county road becomes a state route.

Address sign support breakaway features when identified in the "Clear Zone" columns of the Matrices. When the "F" (full design level) matrix designation is present, the preceding criteria are still applicable and all existing signing is required to conform to the current policy for reflective sign sheeting requirements. Remove or replace signing not conforming to this policy.

820.02 References

Revised Code of Washington (RCW) 47.36.030, Traffic control devices

Manual on Uniform Traffic Control Devices for Streets and Highways (MUTCD), USDOT, Washington DC, 1988, including the *Washington State Modifications to the MUTCD*, M 24-01, WSDOT, 1996

Traffic Manual, M 51-02, WSDOT

Sign Fabrication Manual, M 55-05, WSDOT

Standard Plans for Road, Bridge, and Municipal Construction (Standard Plans), M 21-01, WSDOT

Standard Specifications for Road, Bridge, and Municipal Construction (Standard Specifications), M 41-10, WSDOT

Plans Preparation Manual, M 22-31, WSDOT

Directive D 32-20, "State Route Mileposts," WSDOT

820.03 Design Components

(1) Location

The MUTCD contains the guidelines for positioning signs. Check sign locations to ensure that the motorist's view of the sign is not obscured by other roadside appurtenances. Also, determine if the proposed sign will obstruct the view of other signs or limit the motorist's sight distance of the roadway. Reposition existing signs, when necessary, to satisfy these visibility requirements. Where possible, locate signs behind existing traffic barriers, on grade separation structures, or where terrain features will minimize their exposure to errant vehicles.

(2) Longitudinal Placement

The MUTCD and the *Traffic Manual* provide guidelines for the longitudinal placement of signs that are dependent on the type of sign. Select a location to fit the existing conditions to ensure visibility and adequate response time. In most cases, signs can be shifted longitudinally to enhance safety without compromising their intended purpose.

(3) Lateral Clearance

The MUTCD contains minimum requirements for the lateral placement of signs. These requirements are shown in Figures 820-1a and 820-1b. When possible, position the signs at the maximum practical lateral clearance for safety and reduced maintenance costs. Locate large guide signs and motorist information signs beyond the Design Clear Zone, when limited right of way or other physical constraints are not a factor. See Chapter 700. On steep fill slopes, an errant vehicle is likely to be partially airborne from the slope break near the edge of shoulder to a point 3.6 m down the slope. When signs are placed on fill slopes steeper than 1:6, locate the support at least 3.6 m beyond the slope break. Use breakaway sign support features, when required, for signs located within the Design Clear Zone and for signs located beyond this zone where there is a possibility they might be struck by an errant vehicle. Breakaway features are not necessary on sign posts located behind traffic barriers. Install longitudinal barrier to shield signs without breakaway features within the Design Clear Zone when no other options are available.

Sign bridges and cantilever sign structures have limited span lengths. Locate the vertical components of these structures as far from the traveled way as possible and, where appropriate, install traffic barriers or land forms. See Chapter 710.

Do not locate sign posts in the bottom of a ditch or where the posts will straddle the ditch. The preferred location is beyond the ditch or on the ditch backslope. In high fill areas, where conditions require placement of a sign behind a traffic barrier, consider adding embankment material to reduce the length of the sign supports.

(4) Sign Heights

For ground-mounted signs installed at the side of the road, provide a mounting height of at least 2.1 m, measured from the bottom of the sign to the edge of traveled way. Supplemental plaques, when used, are mounted directly below the primary sign. At these locations, the minimum mounting height of the plaque is 1.5 m.

Do not attach supplemental guide signs to the posts below the hinge mechanism or saw cut notch on multiple post installations. The location of these hinges or saw cuts on the sign supports are shown in the Standard Plans.

A minimum 2.1 m vertical height from the bottom of the sign to the ground directly below the sign is necessary for the breakaway features of the sign support to function properly when struck by a vehicle. The minimum mounting height for new signs located behind longitudinal barriers is 2.1 m, measured from the bottom of the sign to the edge of traveled way. A lower mounting height of 1.5 m may be used when replacing a sign panel on an existing sign assembly located behind longitudinal barrier.

Signs used to reserve parking for people with disabilities are installed at each designated parking stall and are mounted between 0.9 m and 2.1 m above the surface at the sign location. Figures 820-1a and 820-1b show typical sign installations.

(5) Foundations

Foundation details for wood and steel ground mounted sign supports are shown in the Standard Plans. That manual also contains foundation designs for truss-type sign bridges and cantilever sign structures. Three designs, Types 1, 2, and 3, are shown for each structure.

An investigation of the foundation material is necessary to determine the appropriate foundation design. The Type 1 foundation design uses a large concrete shaft and is the preferred installation when the lateral bearing pressure of the soil is 120 MPa or greater. The Type 2 foundation has a large rectangular footing design and is an alternate to the Type 1 foundation when the concrete shaft is not suitable. The Type 3 foundation is used in poorer soil conditions where the lateral bearing pressure of the soil is between 72 MPa and 120 MPa. Use the data obtained from the geotechnical report to select the foundation type.

If a nonstandard foundation or monotube structure design is planned, forward the report to the Bridge and Structures Office for their use in developing a suitable foundation design. See Chapter 510.

(6) Sign Posts

Ground mounted signs are installed on either wood posts, laminated wood box posts, or steel posts. The size and number of posts required for a sign installation are based on the height and surface area of the sign, or signs, being supported. Use the information in Figures 820-2, 820-3, and 820-4 to determine the posts required for each installation. Use steel posts with breakaway supports that are multidirectional if the support is likely to be hit from more than one direction. Design features of breakaway supports are shown in the Standard Plans. Steel posts with Type 2A and 2B bases have multidirectional breakaway features.

820.04 Overhead Installation

Conditions justifying the use of overhead sign installations are noted in the MUTCD. Where possible, mount overhead signs on grade separation structures rather than sign bridges or cantilever supports.

Details for the construction of truss-type sign bridges and cantilever sign supports are shown in the Standard Plans.

The Bridge and Structures Office designs structure mounted sign mountings, monotube sign bridges, and monotube cantilever sign supports. For overhead sign installation designs, provide sign dimensions, horizontal location in relation to the roadway, and the location of the lighting fixtures, to facilitate design of the mounting components by the Bridge and Structures Office.

(1) Illumination

In urban areas, all overhead signs on multilane highways are illuminated. In rural areas, all overhead regulatory and warning signs including guide signs with “Exit Only” panels on both multilane and conventional highways are illuminated. All other overhead signs are only illuminated when one of the following conditions is present:

- Sign visibility is less than 240 m due to intervening sight obstructions such as highway structures or roadside features
- Ambient light from a non-highway light source interferes with the sign’s legibility
- The sign assembly includes a flashing beacon

Sign illumination is provided with sign lighting fixtures mounted directly below the sign. The light source of the fixture is a 175 watt mercury vapor lamp. Provide one sign light for a sign with a width of 4.8 m or less. For wider signs, provide two or more sign lights with a spacing not exceeding 4.8 m. If two or more closely spaced signs are in the same vertical plane on the structure, consider the signs as one unit and use a uniform light fixture spacing for the entire width.

Voltage drops can be significant when the electrical service is not nearby. See Chapter 840 for guidance in calculating electrical line loss.

In areas where an electrical power source is more than 800 m away, utility company installation costs can be prohibitive. Reconsider the benefit of an overhead sign installation at these locations.

(2) Vertical Clearance

The minimum vertical clearance from the roadway surface to the lowest point of an overhead sign assembly is 5.3 m. The maximum clearance is 6.4 m.

(3) Horizontal Placement

Consider roadway geometrics and anticipated traffic characteristics in order to locate signs above the lane, or lanes, to which they apply. Install advance guide signs and exit direction signs that require an EXIT ONLY and "down arrow" panel directly above the drop lanes. To reduce driver confusion as to which lane is being dropped, avoid locating a sign with an EXIT ONLY panel on a horizontal curve.

(4) Service Walkways

Walkways are provided on structure-mounted signs, truss-type sign bridges, and truss-type cantilever sign supports where the roadway and traffic conditions prohibit normal sign maintenance activities. Normally, monotube sign bridges and cantilever sign supports do not have service walkways.

Vandalism of signs, particularly in the form of graffiti, can be a major problem in some areas. Vandals sometimes use the service walkways. Maintenance costs in cleaning or replacing vandalized signs at these locations can exceed the benefit of providing the service walkway.

820.05 Mileposts

Milepost markers are a part of a statewide system for all state highways and are installed in accordance with the Directive D 32-20, State Route Mileposts.

820.06 Guide Sign Plan

A guide sign plan is used by the region to identify existing and proposed guide signing on state highways. The plan provides an easily understood graphic representation of the signing and allows assessment of the continuity in signing to motorist destinations, activities, and services. It is also used to identify deficiencies or poorly defined routes of travel. A guide sign plan for safety and mobility improvement projects is desirable. When proposed highway work affects signing to a city or town, the guide sign plan can be furnished to the official governing body for review and consideration. The guide sign plan is reviewed and approved by the region's Traffic Engineer.

820.07 Documentation

Include the following items in the project file:

- ☐ An inventory of all existing signing within the project limits
- ☐ Approval of proposed guide signs
- ☐ Approval of non-standard signs
- ☐ Soils investigations for all sign bridge and cantilever sign supports

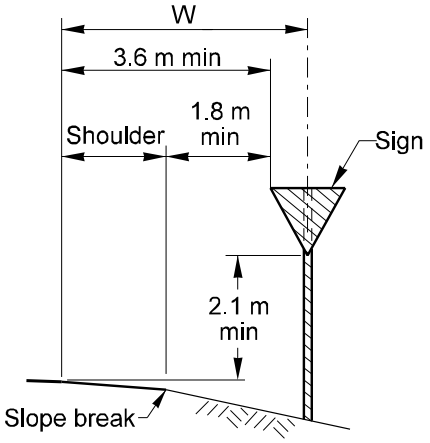

Sign Installation in Fill Section

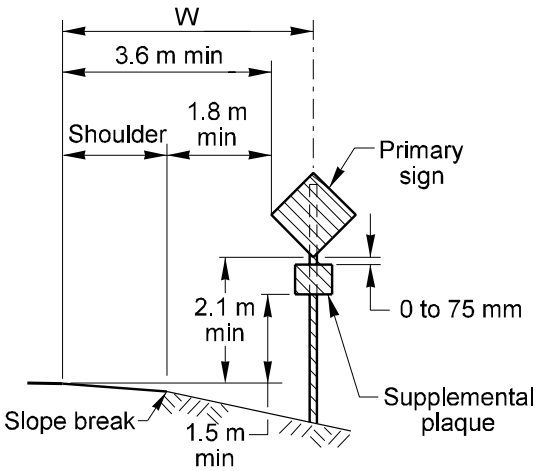

Sign with Supplemental Plaque Installation in Fill Section

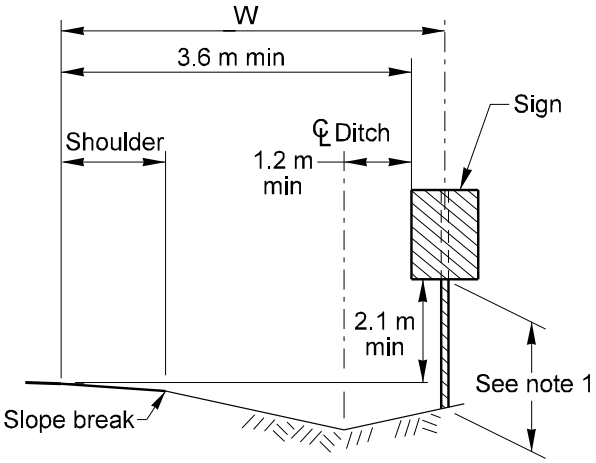

Sign Installation in Ditch section

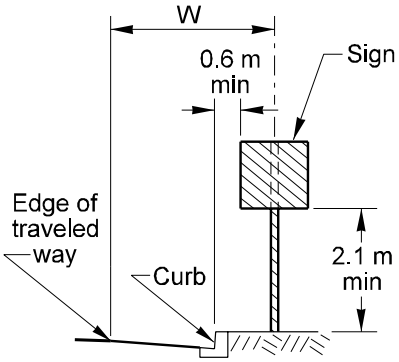

Sign Installation in Curb Section

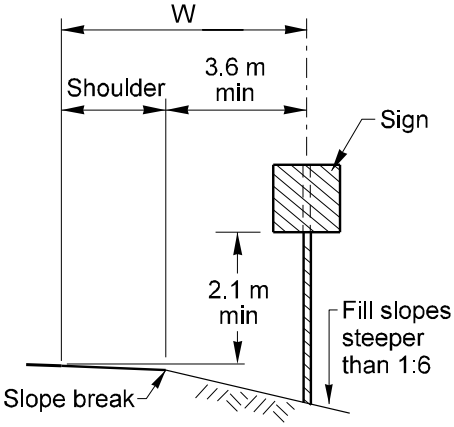

Sign Installation on Steep Fill Slopes

Notes

1. 2.1 m min vertical clearance for sign supports with breakaway features

Sign Support Locations

Figure 820-1a

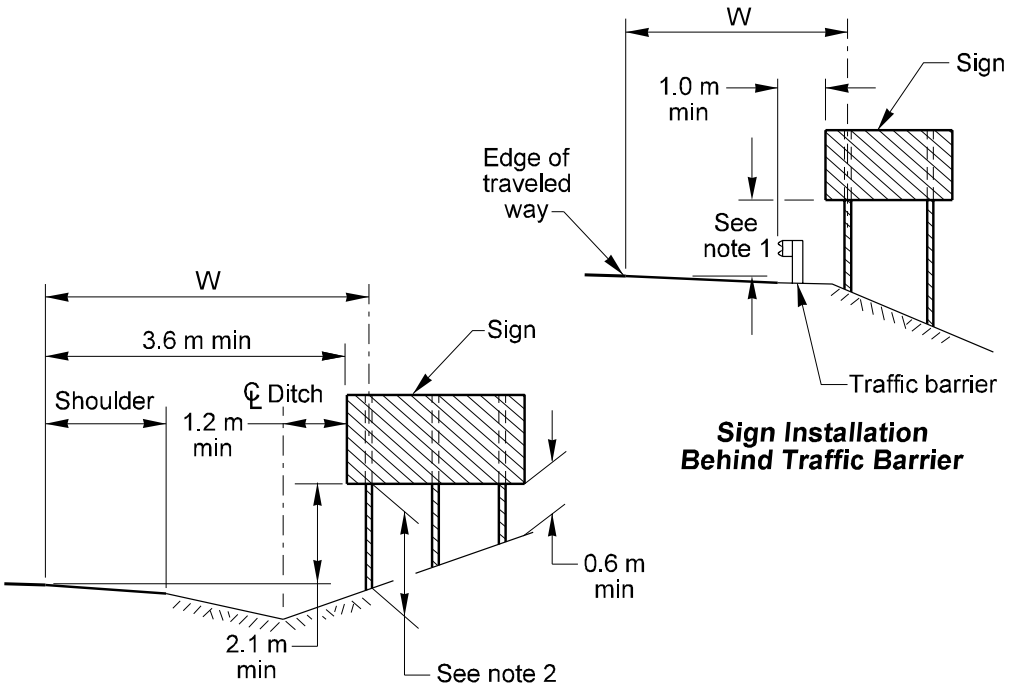

Sign Installation Behind Traffic Barrier

Multiple Sign Post Installation in Ditch Section

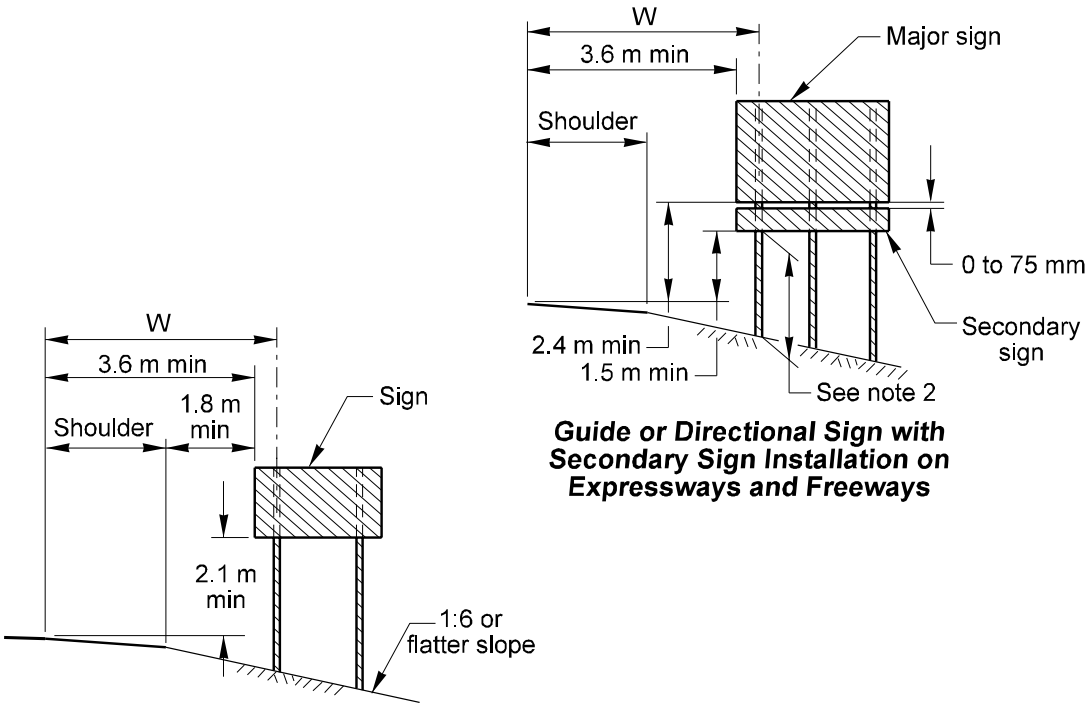

Guide or Directional Sign with Secondary Sign Installation on Expressways and Freeways

Multiple Sign Post Installation in Fill Section

Notes

1. 2.1 m min for new sign installations
   1.5 m min for existing sign installations
2. 2.1 m min vertical clearance for sign supports with breakaway features

Sign Support Locations
Figure 820-1b

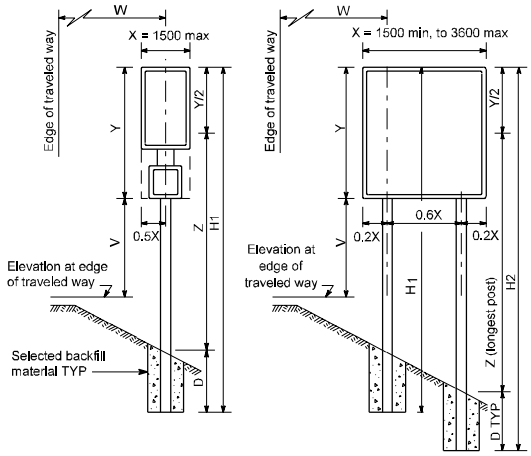

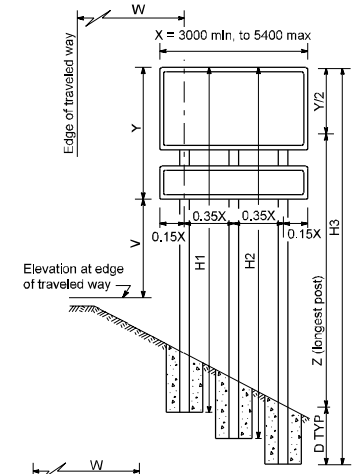

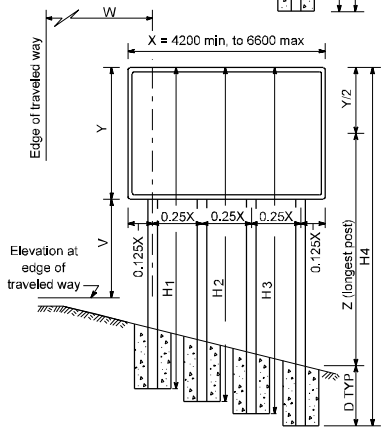

For the purpose of post selection, X and Y are as follows:

Single sign, or back-to-back signs, X and Y are the overall dimensions of the sign.

Multiple sign installations, X and Y are the dimensions of a rectangle enclosing all signs.

Z is the height from ground line to mid-height of sign at the longest post.

H1 + H2, etc., equals overall post length.

D is the required post embedment depth.
V is the vertical clearance from edge of traveled way.

Post size	(X)(Y)(Z) in m^3 **				D
	1 Post	2 Post	3 Post	4 Post	
4x4	1.7*	3.8	5.0	6.6	1.0
4x6	5.0*	10.0	15.0	20.0	1.2
6x6	6.0	12.0	18.0	24.0	1.2
6x8	8.5	24.0	36.3	48.1	1.2
6x10	11.0	33.5	50.1	66.8	1.5
8x10	16.3	45.6	68.3	91.0	1.5
8x12	22.0	65.5	98.1	130.8	1.8

*Single post application utilizing Western Red Cedar has (X)(Y)(Z) allowable of 1.4 and 4.4 respectively.

**Values shown are the maximum permitted. If the quantity (X)(Y)(Z) exceeds the limit for 8X12 posts, use steel post installations.

When sign is to be located in the clear zone or outside of the clear zone, but in an area where it is likely to be struck by an errant vehicle, the following configurations are not permitted:

1. Timber posts larger than 6X8.
2. Signs less than 3.6 m wide and three 6X6 or larger posts.
3. Signs less than 5.1 m wide and four 6X6 or larger posts.

Use steel or laminated wood posts in these situations.

Design Example

Given: 900 wide, 1200 high sign with a 450 wide, 600 high sign mounted 75 below. 2.4 m shoulder with 2% slope and a 1:6 embankment. W = 4500, V=1500.

Solution: Use single post. X=900, Y=1875. Z=1875/2+ (0.02X2400)+ 1500+2100/6=2835. (X)(Y)(Z)=0.9 mX1.875 mX2.835 m=4.78 m^3. From table, select smallest post having (X)(Z) of 4.78 m^3 or more. Use 4X6 post H=Z+ Y/2+D=2835+1875/2+1200=4973. Use 6X6 when using Western Red Cedar.

Design Example

Given: 3000 wide. 1200 high sign, 3.0 m shoulder with 2% slope and a 1:6 embankment. W=10500. V=2100. Assume sign is inside of clear zone.

Solution: Try two posts. X=3000, Y=1200.
Z=1200/2+2100+(0.02x3000)+(7500+0.6X3000)/6=4310.
(X)(Y)(Z)=3 mX1.2 mX4.31 m=15.52 m^3. From table, select smallest post having (X)(Y)(Z) of 15.52 m^3 or more. Two 6X6 posts are not sufficient use two 6X8 posts because three 6X6 posts would require a traffic barrier.

H2=4310+600+1200=6110

H1=6110-(0.6X3000)/6=5810

All dimensions are in millimeters (mm) unless otherwise noted.

Wood Posts
Figure 820-2

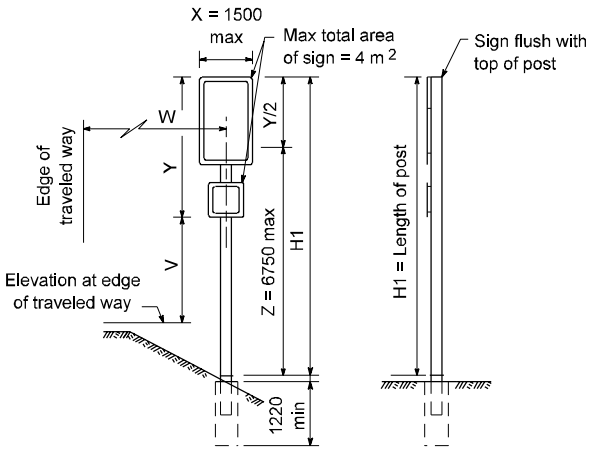

For the purpose of post selection, X and Y are as follows:

Single sign, or back-to-back signs, X and Y are the overall dimensions of the sign.

Multiple sign installations, X and Y are the dimensions of a rectangle enclosing all signs.

Z is the height from the base connection (64 mm above the post foundation) to mid-height of sign at the longest post.

H1, H2, etc., equals overall post length (base connection to top of sign).

D is the required post embedment depth (see standard plans).

V is the vertical clearance from the edge of traveled way.

Single Post Signs

For 1.8 m^2 or smaller signs, use 100 mm standard pipe for Z less than 5550 or 125 mm standard pipe for Z greater than 5550.

For 4 m^2 or smaller signs, use 125 mm standard pipe for Z less than 4500 or 150 standard pipe for Z greater than 4500.

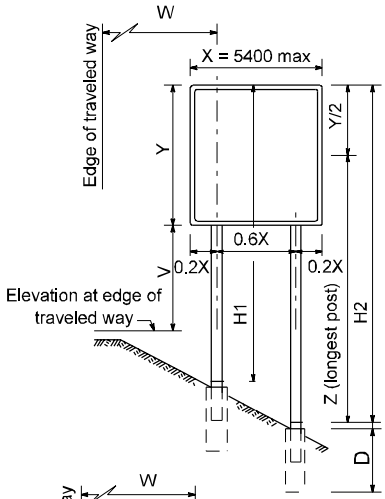

Two and Three post signs

Post Selection (X)(Y)(Z) in m^3 *		Post size	
2 Posts	3 Posts	* *	AASHTO M183
44.45	66.68	W150x13	W150x18
79.57	119.49	W150x18	W150x24
139.88	209.82	W200x27	W200x31
214.64	321.96	W250x33	W250x39

*Values shown are the maximum permitted.
**AASHTO M222 or M223 may be used as an acceptable alternate to AASHTO M183 at the sizes listed.

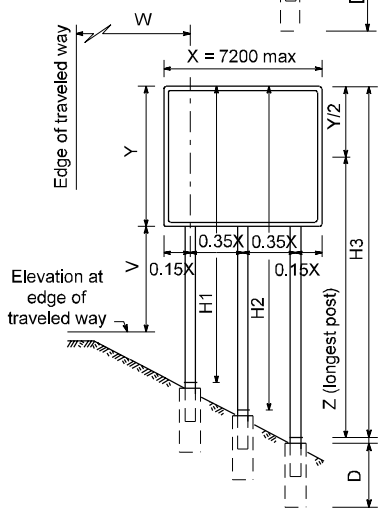

Design Example

Given: 6.6 m wide, 3.6 m high sign. 3.0 m shoulder with 2% slope and a 1:3 embankment slope. W=9.6m, V=2.1m.

Solution: Use three posts. X=6600, Y=3600, V=2100, Z=3600/2+2100+(0.02x3000)+(6600+0.70x 6600)/3-65 =7.64m. (X)(Y)(Z)=6.6 mX3.6 mX7.64m=181.53 m^3. From table, sele smallest post having (X)(Y)(Z) of 181.53 m^3 or more. Use W200x27 (AASHTO M222 or M223) or W200x31 (AASHTO M183) posts.

H3=7635+1800=9435
H2=9435-(0.35x6600)/3=8665
H1=9435-(0.70x6600)/3=7895

For any sign installation located within the clear zone distance of the lane edge, the total weight of all the posts in the 2100 wide path shall not exceed a combined post weight of 67 kg/m. If the proposed sign post configuration does not meet this criteria, relocate, resize or provide additional protection for the proposed installation.
Use the following table to determine post weights.
All dimensions are in millimeters (mm) unless otherwise noted.

Wide Flange Beam Dimensions

Beam size	Weight kg/m
W150x13	13
W150x18	18
W150x24	24
W200x27	27
W200x31	31
W250x33	33
W250x39	39

Steel Posts
Figure 820-3

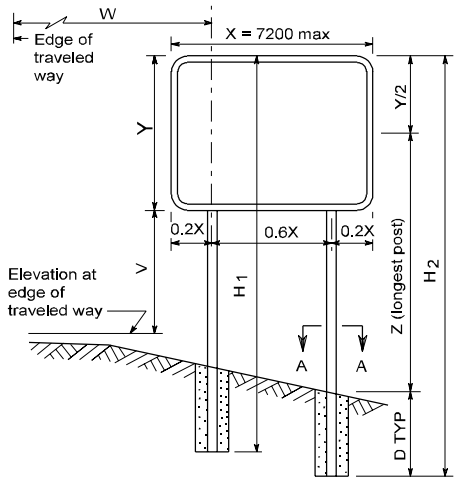

For the purpose of post selection, X and Y are as follows:

Single sign, or back-to-back signs. X and Y are the overall dimensions fo the sign.

Multiple sign installations, X and Y are the dimenions of a rectangle enclosing all signs.

Z is the height from ground line to mid-height of sign at the longest post.

H_1 and H_2 equal overall post length.

D is the required post embedment depth.

V is the vertical clearance from edge of traveled way.

Box Post Type	Z (m)	(X)(X)(Z) m^3*
M	4.58 to 9.14	37.66
M	4.57 or less	47.03
L	4.58 to 9.14	99.16
L	4.57 or less	123.97

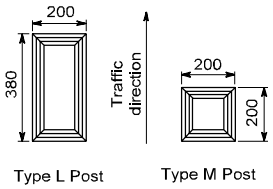

SECTION A-A

Design Example

Given: 4800 wide, 1800 high sign. 3.0 m shoulder with 2% slope and a 1:6 embankment. W = 7500, V = 2100.

Solution: Use two posts. X = 4800, Y=1800.

For two posts: Z = 1800/2 + 2100 + (0.02 x 3000) + (4500 + 0.6 x 4800)/6 = 4.29 m.
(X)(Y)(Z) = 4.8 m x 1.8 m x 4.29 m = 37.07 m^3 .
From table, select smallest post having (X)(Y)(Z) of 37.07 m^3 or more, and meets the "Z" requirements.

Use two M posts.

H_2 = Z + Y/2 + D = 4.29 m + 0.9 m +1.8 m = 6.99 m.
H_1 = 6.99 - (0.6 x 4.8 m)/6 = 6.51 m.

Design Example

Given: 5400 wide, 2400 high sign, 3.0 m shoulder with 2% slope and a 1:6 embankment. W = 7500, V = 2100.

Solution: Use two posts. X = 5400, Y=2400.

For two posts: Z = 2400/2 + 2100 + (0.02 x 3000) + (4500 + 0.6 x 5400)/6 = 4.65 m.
(X)(Y)(Z) = 5.4 m x 2.4 m x 4.65 m = 60.26 m^3 .
From table, select smallest post having (X)(Y)(Z) of 60.26 or more, and meets the "Z" requirements.

Use two L posts.

H_2 = Z + Y/2 + D = 4.65 m + 1.2 m + 2.7 m = 8.55 m.
H_1 = 8.55 - (0.6 x 5.4 m)/6 = 8.01 m.

Z (m)	Total Sign Area (M^2)					
	Up to 4.7	4.7 to 9.3	9.4 to 13.9	14.0 to 18.6	18.7 to 23.2	23.3 to 26.9
2.7 to 3.7	1.8	1.8	2.1	2.4	2.7	3.1
3.71 to 4.6	1.8	1.8	2.3	2.7	3.1	Not Permitted
4.61 to 5.5	2.1	2.3	2.7	Not Permitted		
5.51 to 6.7	2.1	2.4	3.1			
6.71 to 7.9	2.3	2.6	Not Permitted			

Laminated Post Embedment Depth

All dimensions are in millimeters (mm) unless otherwise noted.

Laminated Wood Box Posts

Figure 820-4

860 Intelligent Transportation Systems

860.01 General
860.02 References
860.03 Traffic Data Collection
860.04 Traffic Flow Control
860.05 Motorist information
860.06 Documentation

860.01 General

Intelligent Transportation Systems (ITS) apply advanced technologies in communications and computer science to optimize the safety and efficiency of the existing surface transportation network. In highway design, this goal is achieved by collecting and using traffic data to develop predictive models, regulating access to the freeway system, and providing timely information on traffic conditions to motorists. Previously, this technology was called Surveillance, Control, and Driver Information (SC&DI). In the context of highway design, ITS and SC&DI are synonymous.

The Transportation Equity Act (TEA-21) requires ITS projects to comply with the standards being developed in association with the federal government and private industry. These standards will be known as the National ITS Architecture. These standards are intended to ensure interoperability and efficiency to the maximum extent practicable for the many different types of ITS devices under development. The National ITS Architecture organizes a "system of subsystems" and makes managing ITS deployment easier. The Architecture helps agencies communicate complex ideas by providing a common language and definitions. One benefit of using the National ITS Architecture is that it helps identify all agencies and jurisdictions that should be included in ITS projects.

The ITS program in Washington State is known as "Venture Washington." It focuses on five areas within Washington State. These areas were chosen because they each have unique characteristics and problems associated with traffic. These five areas are:

- The Greater Puget Sound Region
- The Spokane Area
- The Vancouver Area
- Other Statewide Urban Areas
- Rural Areas and Intercity Corridors

An intelligent transportation system can be implemented in stages, starting with a small project for immediate benefit and then expanding the system as needed. Consider installing an ITS at any of the following locations:

- Where congestion frequently causes accidents.
- At freeway on-ramps where merging problems routinely occur.
- Where heavy traffic volumes occur between closely spaced on-ramps.
- Where the motorist would benefit from information on traffic conditions or alternative routes.

The initial stage of an intelligent transportation system can be as simple as installing a dynamic message sign that warns motorists of unusual driving conditions. Appropriate messages can be displayed on the sign using information obtained by direct observation of road conditions or by reports from law enforcement agencies.

Automated systems incorporate a traffic data collection system. The data collection system provides basic data to determine traffic volumes, vehicular speeds, and levels of congestion. The traffic data can be analyzed and used to verify the locations of traffic problems. This data can also be used in freeway computer models to predict the impacts of proposed improvements.

Design each stage of the system so that the associated technology can be used in subsequent, more sophisticated stages. For example, the stage following data collection could be the installation of closed circuit television cameras (CCTV) to

monitor freeway locations where congestion is commonplace. The CCTV monitoring is used to detect or confirm incidents noted by other forms of data collection. The installation of motorist information devices such as dynamic message signs or highway advisory radio provides a means of transmitting this information to the motorist. Eventually, as traffic congestion increases, ramp meters are installed to control the traffic flow entering the facility.

When planning a staged system, attempt to determine the ultimate communication system to the degree that underground conduit size and quantity are known and can be installed in the initial construction. Consider long-term maintenance issues and component standardization.

The Northwest Region Traffic Systems Management Center (TSMC) is an example of a traffic operations center (TOC). Because a TOC usually works best with existing radio communication, it is located adjacent to or as part of a radio communication office. In addition to the location of a TOC, consider the work force and equipment costs required to operate and maintain the entire system. The size of a TOC is dependent on the complexity of the system and can vary from a single person at a desk to a large room with advanced equipment requiring continuous staffing.

860.02 References

Transportation Equity Act (TEA-21) of 1998

Manual on Uniform Traffic Control Devices for Streets and Highways (MUTCD), USDOT,

SC&DI Design Guide, WSDOT Northwest Region

SC&DI Operations Guide, WSDOT Northwest Region

I-90 Seattle to Spokane, ITS Corridor Study, WSDOT Advanced Technology Branch

I-5 Seattle to Vancouver, BC, ITS Corridor Study, WSDOT Advanced Technology Branch

Portland/Vancouver to Boise, ITS Corridor Study Plan, WSDOT Advanced Technology Branch

Application of Advanced Transportation Technology Within Washington State: Discussion and Policy Recommendations, WSDOT Advanced Technology Branch

State-Wide Communications Strategic Plan, WSDOT Advanced Technology Branch

Seattle to Portland Inter-City ITS Corridor Study and Communications Plan, WSDOT Advanced Technology Branch

Venture Washington, WSDOT Advanced Technology Branch

860.03 Traffic Data Collection

Loop detectors, placed in traffic lanes, are the most common devices used to collect traffic data. In general, data stations are spaced at 800 m intervals between interchanges. Alternative methods of detection include video detection cameras, microwave detectors, and other newer technologies. This information can be augmented with cellular phone calls from motorists, Washington State Patrol (WSP) reports, and commercial traffic reporters.

The loops sense the amount of time a vehicle is over them. This is called *occupancy* and is recorded by a data station in a nearby roadside cabinet. The data station periodically transmits the data to a central computer. The information from the detection system is transmitted over leased phone lines, WSDOT phone lines, fiber optic lines, or microwave transmitters to a traffic operations center. A spread spectrum radio is another method of transmitting data. The central computer translates these data into an indication of traffic congestion for incident detection and traffic flow information.

A single loop provides traffic volumes and lane occupancy from which, given some basic assumptions, speeds can be computed. Two loops spaced a known distance apart, longitudinally, provide better determinations of traffic speeds.

CCTV is used by the department to manage the freeway system. It is not usually used as a traffic law enforcement tool. The primary function of CCTV is to confirm or detect incidents. As a

secondary function, this information can be provided to the WSP, incident response teams, maintenance forces, and the local media.

860.04 Traffic Flow Control

During peak traffic volume periods, freeway on-ramps are metered with either roadside or overhead traffic signals. These ramp meters control or regulate the flow of traffic entering the freeway. The metering prevents the entering traffic from exceeding freeway capacity by limiting the number of vehicles that enter within a specific time period. The meters also keep long platoons of cars from merging onto the freeway. This process makes on-ramp merges safer and allows freeway traffic to move at a more efficient speed.

Ramp meters are traffic control signals and an approved traffic signal permit is required. The approval procedures for traffic signal permits are noted in Chapter 850.

Consider the available area for vehicle storage on the ramp when locating a ramp meter. If the arrival rate of the entering traffic exceeds the metered flow rate, traffic queues will develop. A common concern is that this queue might extend onto the crossroads and interfere with local traffic. Chapter 1050 provides guidance on the placement of the ramp meter. This guidance, however, only addresses the required acceleration needed to merge onto the freeway. The storage area needed at the meter varies at each location and is determined separately. If it is not possible to provide an adequate storage length on the ramp, consider alternate methods of addressing the problem.

(1) Adjust the ramp metering rate to temporarily increase the rate.

(2) Allow two vehicles to pass the meter at a time.

(3) Widen to two metered lanes.

(4) Provide storage lanes on the crossroad.

(5) Provide alternate routes for local traffic.

(6) Provide HOV bypass lanes.

(1) **Adjust Rate.** Ramp metering uses information from the detection loops to determine freeway congestion adjacent to and downstream from the ramps. Data from the loops are sent to a central computer or a local computer that adjusts the metering rate for the traffic congestion and transmits this rate to the ramp meter controllers. The ramp controllers implement the metering rate and control the signal. A ramp metering rate can be determined in two ways: remote metering and standby metering.

For remote metering, the metering rates of all ramp meter locations are determined by the local controller and adjusted by the central computer at the TOC. This is the normal mode of operation for the Seattle system. The central computer is capable of adjusting upstream metering rates on the basis of downstream conditions. A metering rate at an upstream location is decreased if traffic congestion develops downstream. Metering start and end times, as well as metering rates, can be remotely adjusted from the TOC with an override function.

Standby metering, also called local control, is used when communications with the central computer are interrupted or when that computer is not in service. In these cases, each ramp meter determines a metering rate for its on-ramp according to local traffic conditions or by a pre-determined rate based on a time of day table. These time of day tables are developed to predict averages of the actual traffic volume peaking characteristics of the on-ramp. In standby metering, each ramp meter operates independently without coordinating with other controllers.

Single lane metering rates normally vary between 4 and 15 vehicles per minute (240 and 900 vehicles per hour). If a ramp has heavier traffic volumes and queue storage is not adequate, several actions can be taken.

(2) **Two Vehicles**. The metering capacity can be increased by allowing two vehicles to enter during each green cycle. This can increase a single lane ramp meter maximum capacity to about 1,100 vehicles per hour. This procedure is a temporary, operational solution and is not a recommended design practice.

(3) **Widen**. The metering capacity can be increased by widening the ramp to install additional lanes. Widening a single-lane on-ramp to create two lanes can double the metered traffic volume to 1,800 vehicles per hour, provided no downstream traffic congestion develops. Changes in ramp access to the freeway might require an access point decision report. (See Chapter 1425.)

(4) **Storage Lanes**. If adequate storage length cannot be provided on the ramp, it might be possible to provide storage as turn lanes on the crossroad and adjust the ramp terminal traffic signal timing to limit freeway access movements.

(5) **Diversion**. Diversion of some ramp traffic to local arterial streets might can be desirable, assuming a suitable alternate route is available. When diversion occurs, modification of traffic signal timing and coordination plans on the alternative routes might be necessary. Coordinate efforts with the local agency and, if appropriate, initiate public meetings to identify needs and impacts.

(6) **HOV Bypass.** Wherever possible, provide bypass lanes for high occupancy vehicles (HOV) around the traffic queue at the ramp meter. The HOV bypass allows transit vehicles to maintain schedules and indirectly provides an incentive for carpooling. (See Chapter 1050.)

860.05 Motorist Information

Motorist information includes dynamic message signs, highway advisory radio, telephone traffic information lines, commercial radio and television messages, and Internet access for personal computers. These are all used to transmit traffic conditions to freeway users. The motorist information system is also used to alert drivers to short term construction and maintenance activities that might affect normal travel patterns. It can also be used to suggest alternative travel routes.

(1) Dynamic Message Signs

Dynamic message signs (DMS) are used to provide motorists with current road and traffic conditions. Accidents, incidents, construction and maintenance activities, reversible lane status, traffic congestion, and traction device requirements are examples of this information. Because motorists receive many distractions while driving, consider the location of the DMS. The best location for a DMS is on a tangent section of roadway with few roadside distractions. Overhead installations have more visual impact. When possible, use sign bridges, cantilever sign structures, or bridge mounts on existing overcrossings for DMSs. Use the message displays and sign location requirements contained in the *Manual on Uniform Traffic Control Devices for Streets and Highways* (MUTCD) and Chapter 820.

(2) Highway Advisory Radio

The highway advisory radio (HAR) system uses car radios to provide information to motorists. Warning signs, usually with flashing beacons, direct motorists to select a specific AM radio station for information. HAR has an advantage over DMS because longer messages with more detailed information can be relayed to the motorist. The major disadvantages are that not all vehicles have radios that can receive HAR frequencies, and some motorists might not use the radio for this information. HAR works best when used in conjunction with DMS.

HAR locations and assigned radio frequencies are restricted to prevent interference with other frequencies in use. HAR message content is restricted by federal regulations and WSDOT restricts HAR messages to noncommercial voice information pertaining to roadway and mountain pass conditions, major incidents, traffic hazards, and travel advisories.

(3) Additional Public Information Components

A telephone number can be provided to give the same prerecorded messages as the HAR and can also include transit and carpool information. A computer generated flow map can be developed, using the data collection system, to graphically depict actual traffic flows within a geographical area. The flow map can be made accessible to the public by providing links to a WSDOT web site.

860.06 Documentation

Preserve the following documents in the project file: See Chapter 330.

- ☐ Justification for the installation of ramp meters.
- ☐ Approved traffic signal permit for ramp meters.
- ☐ All correspondence and coordination with local agencies.
- ☐ Designs for the ultimate system when staged implementation is used.

P65:DP/DMM

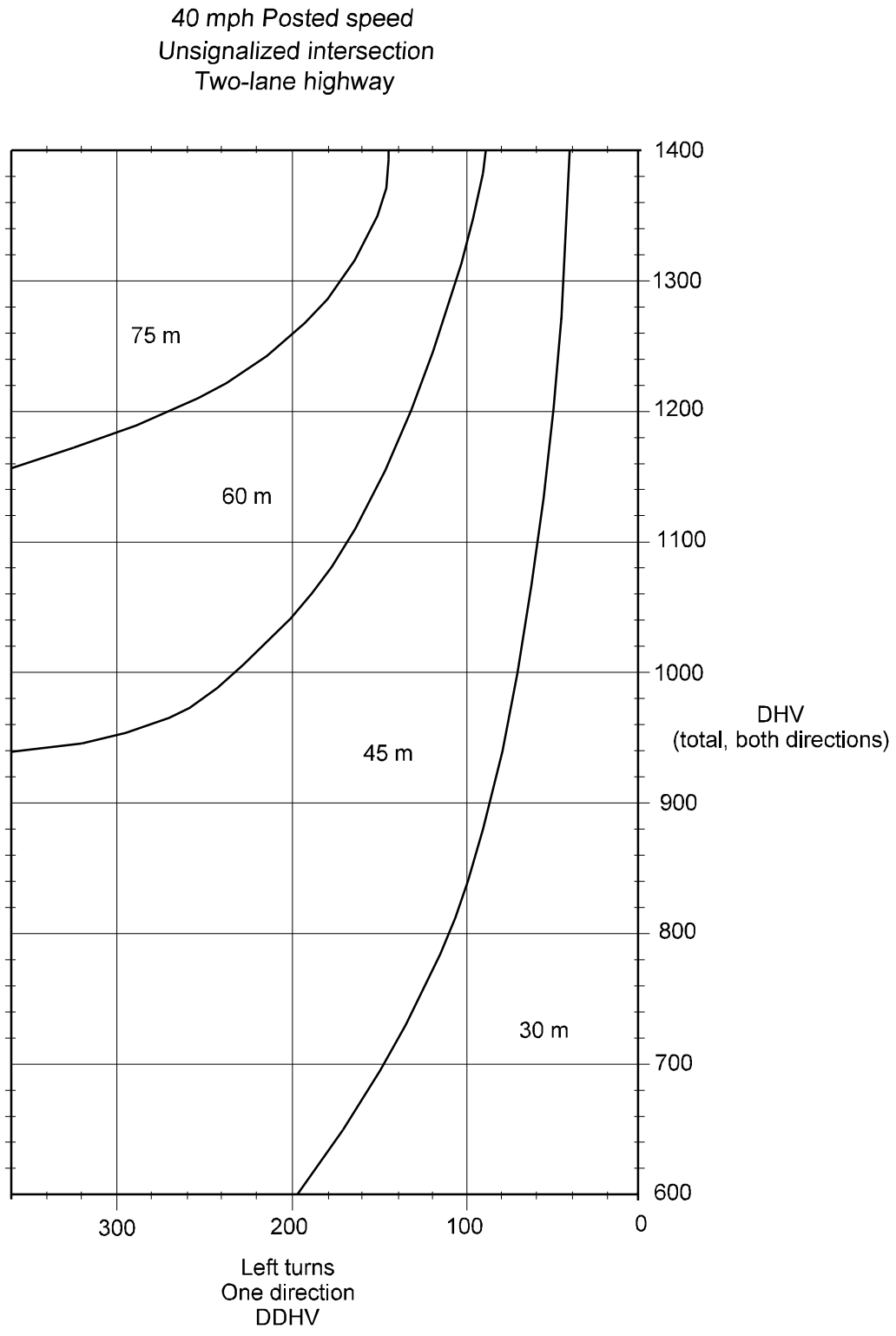

Left-Turn Storage Length
Figure 910-9a

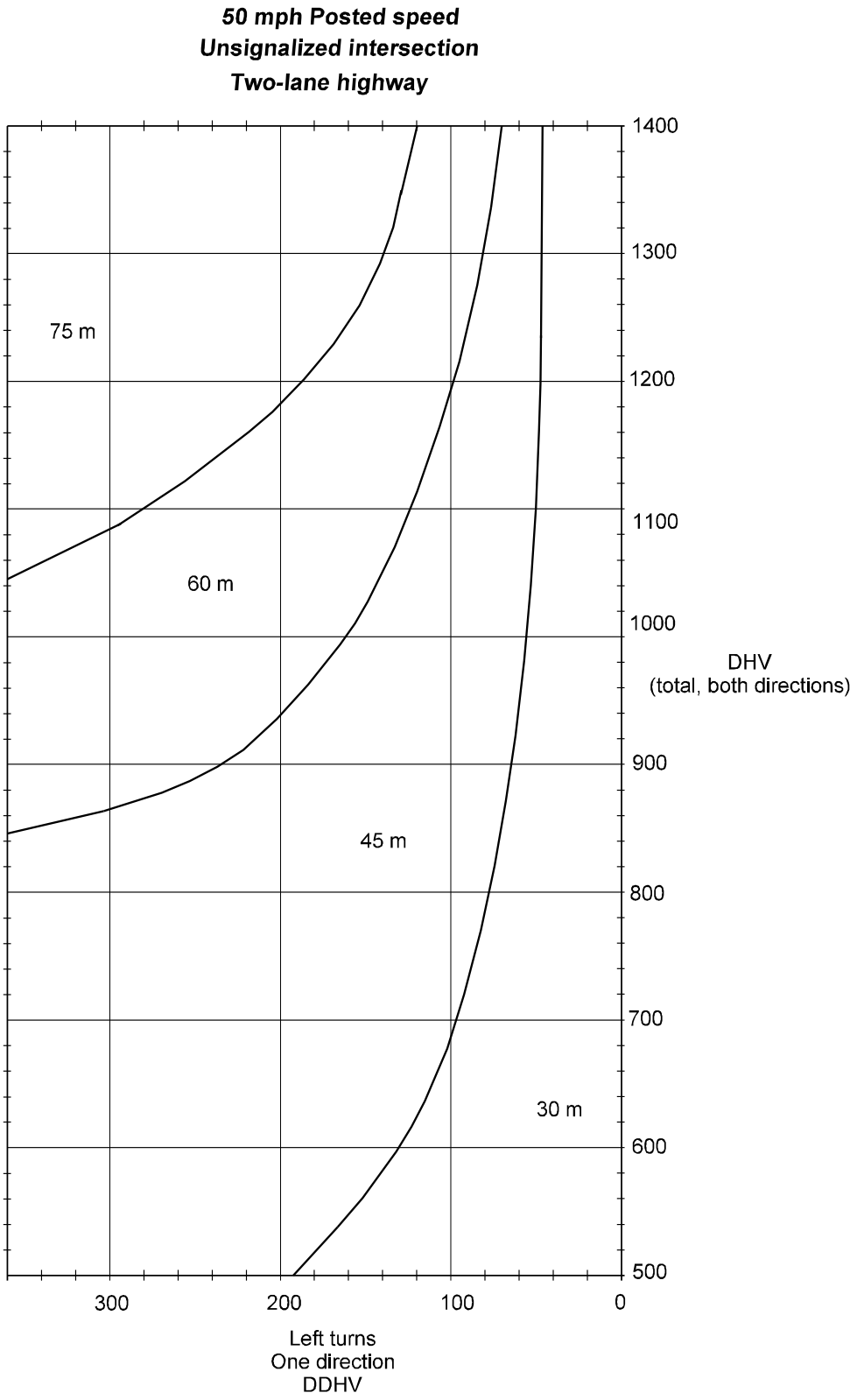

Left-Turn Storage Length
Figure 910-9b

60 mph posted speed
Unsignalized intersection
Two-lane highway

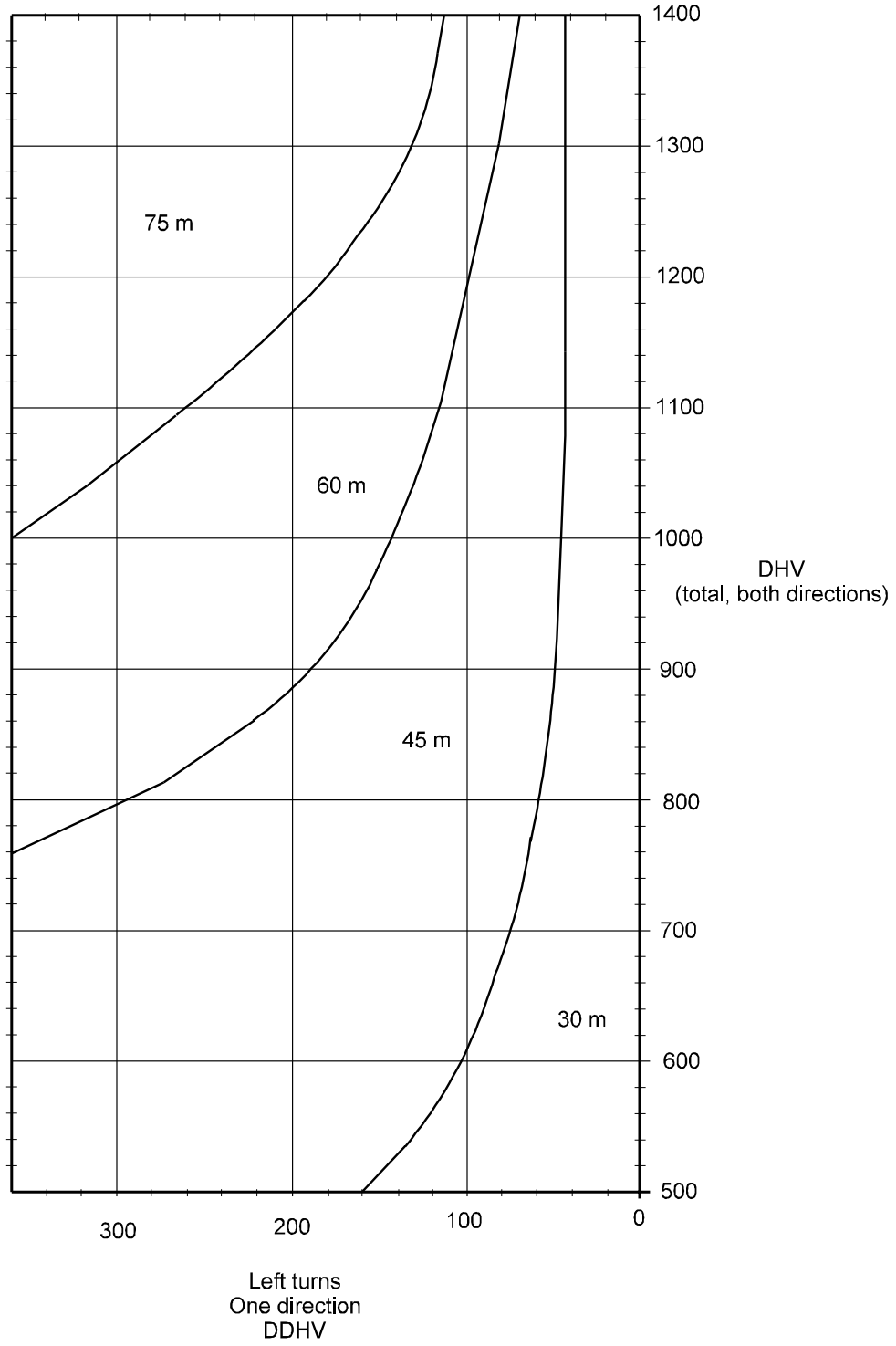

Left-Turn Storage Length
Figure 910-9c

Channelization Widening

Figure 910-10a

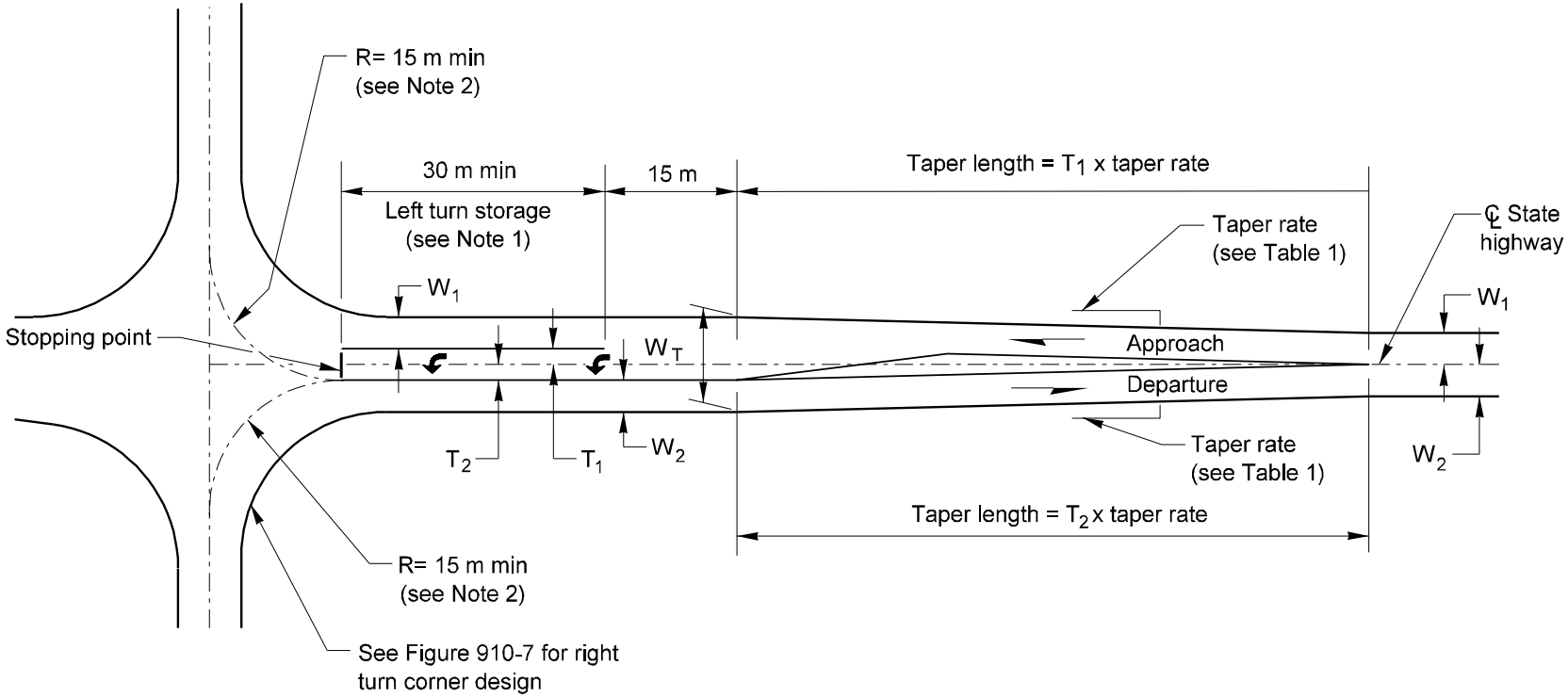

Table 1

Posted Speed	Taper Rate
55 mph	55:1
50 mph	50:1
45 mph	45:1
40 mph	40:1
35 mph	35:1
30 mph	30:1
25 mph	25:1

Notes:

1. The minimum width of the left turn storage lane (T_1 + T_2) is 3.3 m. The desirable width is 3.6 m. See Figures 910-9a-9d for left turn storage length.
2. Use templates for WB-20 design vehicles.
3. See Standard Plans and MUTCD for striping details.

W_1 = Approaching through lane
W_2 = Departing lane
T_1 = Width of left turn lane on approach side of ℄
T_2 = Width of left turn lane on departure side of ℄
W_T = Total width of channelization (W_1+W_2+T_1+T_2)

Median Channelization — Median Width 7 m to 8 m

Figure 910-10b

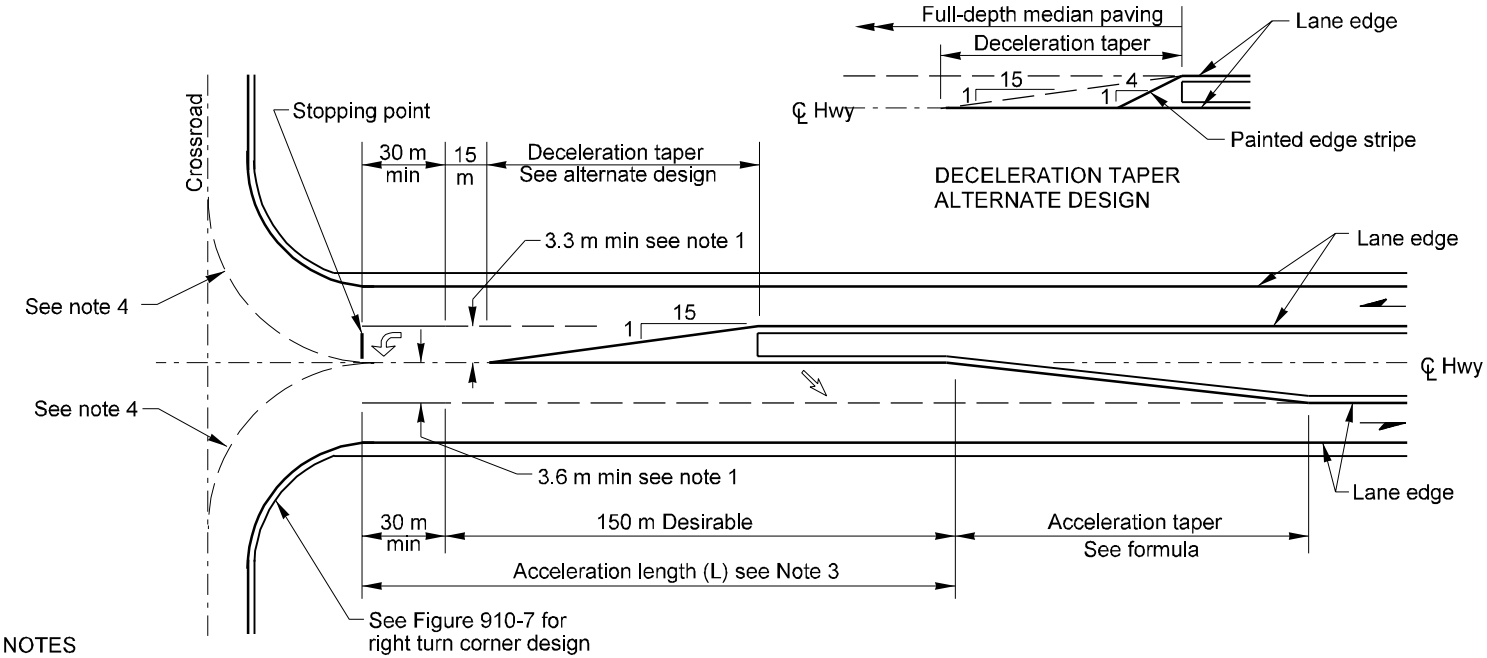

NOTES

1. Lane widths of 3.9 m are desirable for both the left turn storage lane and the median acceleration lane.
2. For increased storage capacity, the left turn deceleration taper alternate design should be considered.
3. The total length of the median acceleration lane shall not be less than the minimum acceleration lane length shown in Figure 910-13.
4. R = 15 m MIN; use templates for WB-20 design vehicles.

ACCELERATION TAPER FORMULA

When posted speed is 45 mph or higher:
Taper length = lane width x posted speed (mph)

When posted speed is less than 45 mph:

$$\text{Taper length} = \frac{\text{Lane width x (posted speed)}^2}{60}$$

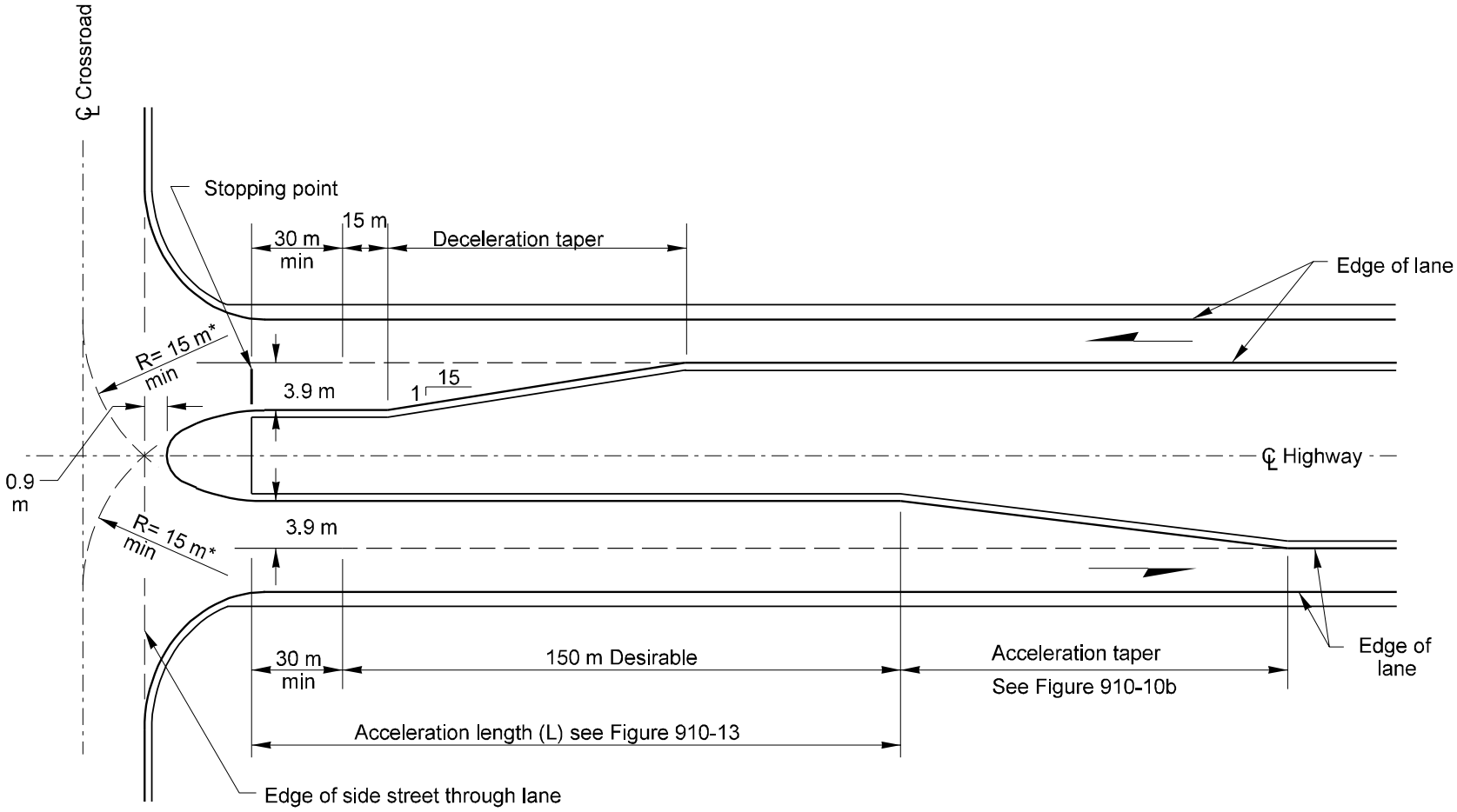

* Use templates for WB-20 design vehicles.

Median Channelization — Median Width of More Than 8 m

Figure 910-10c

NOTES

1. Use templates for WB-20 design vehicle.
2. See Figure 910-7 for right-turn corner esign.
3. For median width 5.2 m or more. For median width less than 5.2 m widen to 5.2 m or use figure 910-10b without median accelerstion lane.

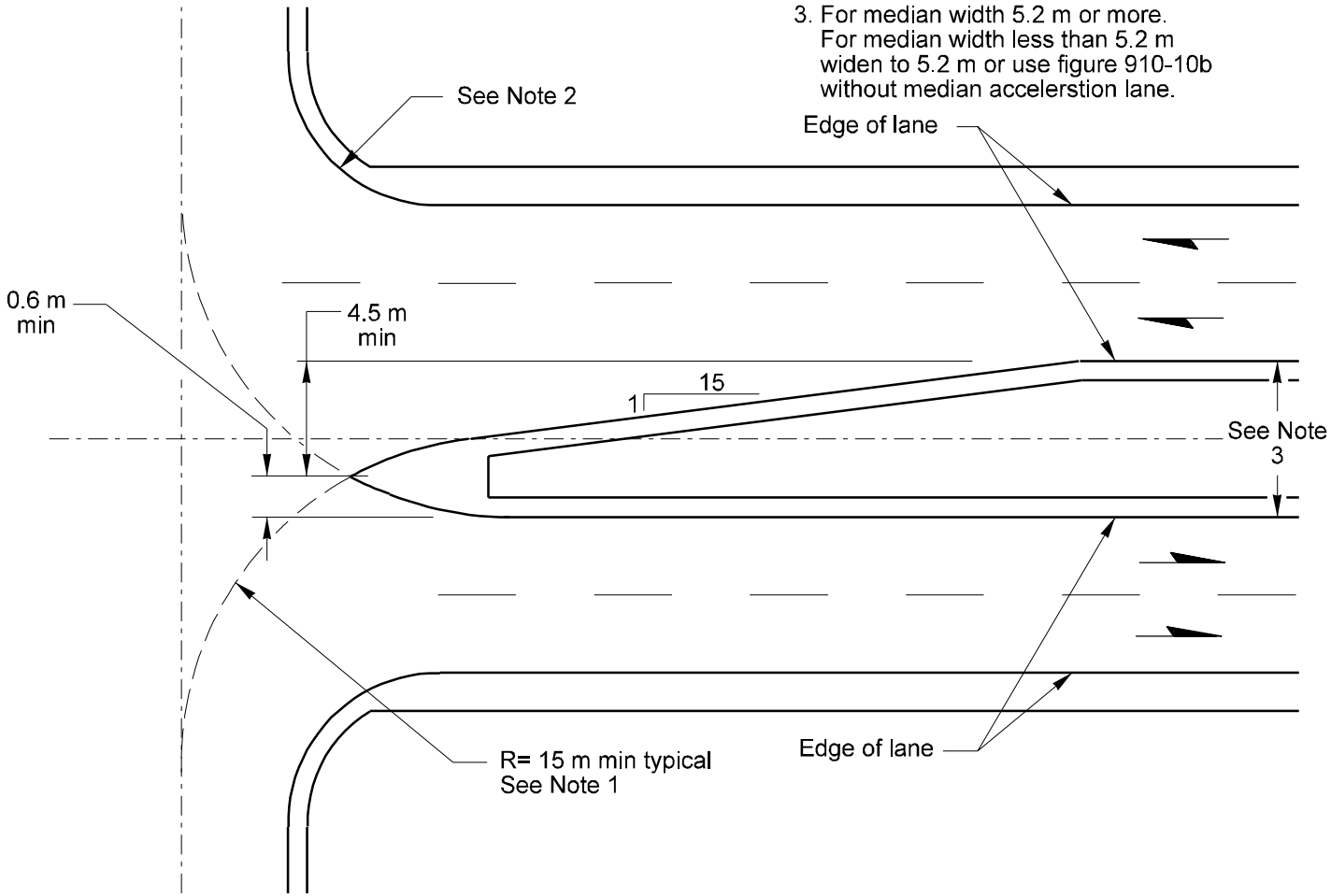

Minor Intersection on Divided Highway

Figure 910-10d

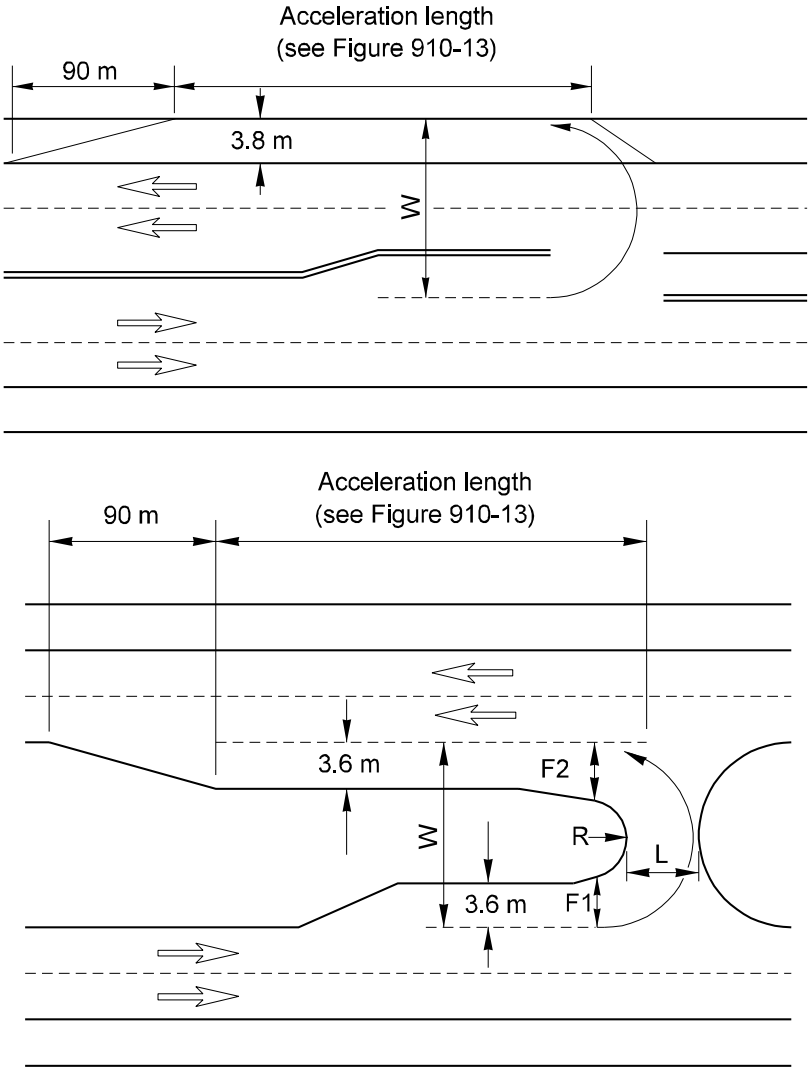

Vehicle	W	R	L	F1	F2	Taper
P	15.6	4.2	4.2	3.6	3.6	—
SU	26.6	9.0	5.9	4.0	4.6	10:1
BUS	26.6	8.5	7.0	4.1	5.5	10:1
WB-12	25.4	7.5	8.0	4.4	6.2	6:1
WB-15	28.4	8.0	9.5	4.9	7.7	6:1
WB-20	28.4	6.8	14.8	4.5	10.5	6:1
MH	25.4	8.0	5.9	4.5	4.9	10:1
P/T	15.6	3.3	3.8	3.6	5.4	6:1
MH/B	31.4	11.0	6.5	4.5	5.0	10:1

U-Turn Locations
Figure 910-15

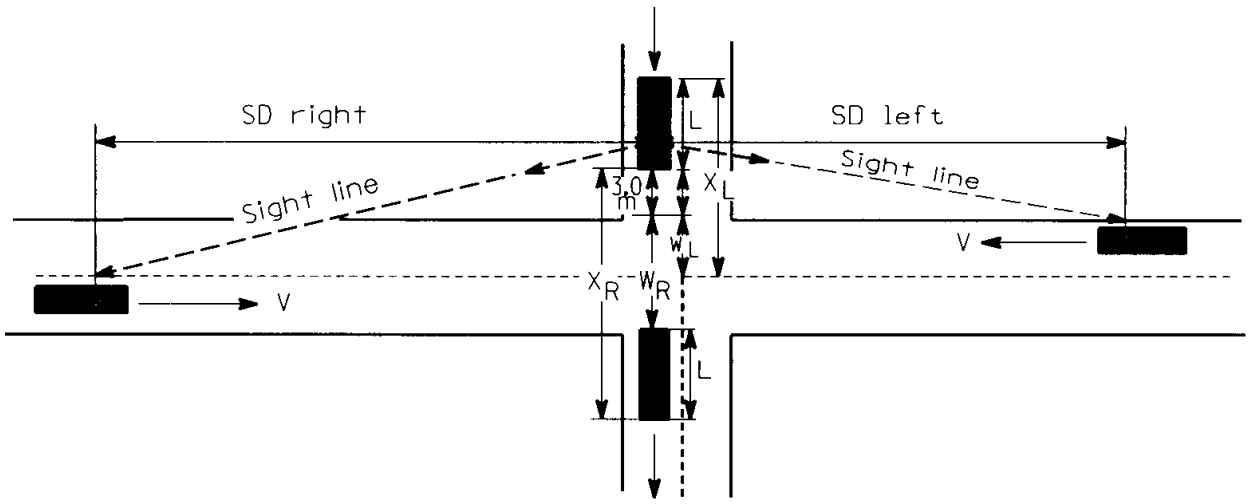

SD = Sight Distance
ta = Time for acceleration
V = Design speed on the through highway
L = Length of vehicle
X = Length of vehicle travel

L Values		
P	=	5.8 m
SU	=	9.1 m
WB-15	=	16.7 m
WB-20	=	21.0 m

Note: If the crossroad is not level, multiply ta by the adjustment factor to consider the grade.

Sight Distance Adjustment Factor					
Design Vehicle	**Crossroad Grade, Percent**				
	-4	**-2**	**0**	**+2**	**+4**
P	0.7	0.9	1.0	1.1	1.3
SU	0.8	0.9	1.0	1.1	1.3
WB-12	0.8	0.9	1.0	1.2	1.7

Example

Given:

Two - 3.6 m lanes to be crossed by a WB-15.
Intersection angle approximately 90°.
Through highway design speed = 70 mph

Find:

The minimum required sight distance.

Solution:

$X_{right} = 3.0 + W_R + L = 3.0 + 7.2 + 16.7 = 26.9$ m
$X_{left} = 3.0 + W_L + L = 3.0 + 3.6 + 16.7 = 23.3$ m

From the charts as shown, the required minimum SD = 380 m right and 360 m left.

Sight Distance for Grade Intersection With Stop Control
Figure 910-16a

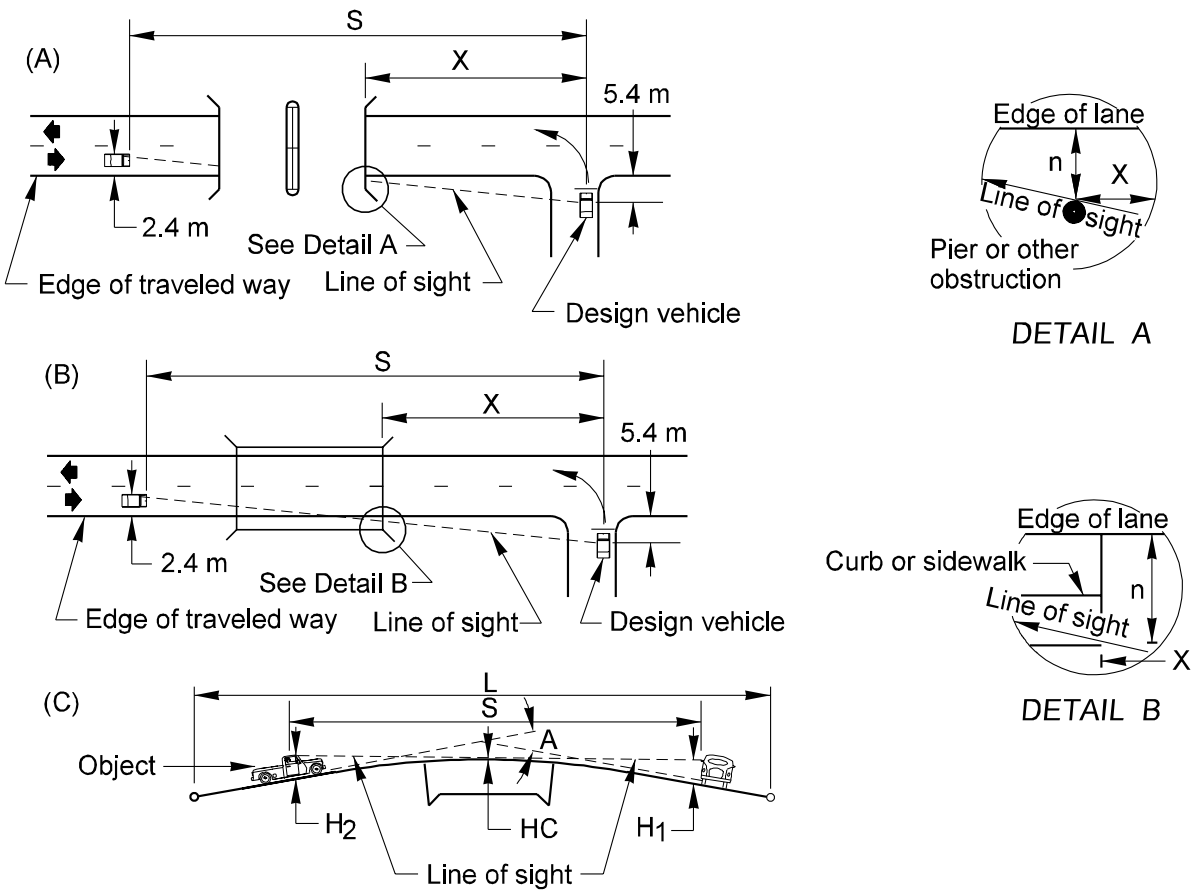

For bridge pier or bridge rail:

$$S = \frac{7.8(x)}{5.4 - n}$$

Where:

S = Available sight distance (m)
n = Offset from sight obstruction to edge of lane (m)
x = Distance from center line of lane to sight obstruction (m)

For crest vertical curve over a curb where S<L:

$$S = \sqrt{\frac{0.1L\left[\sqrt{2(H_1 - HC)} + \sqrt{2(H_2 - HC)}\right]^2}{A}}$$

$$L = \frac{AS^2}{0.1\left[\sqrt{2(H_1 - HC)} + \sqrt{2(H_2 - HC)}\right]^2}$$

Where:

S = Available sight distance (m)
H_1 = Eye height (1070 mm)
H_2 = Object height (1300 mm)
HC = Curb height (mm)
L = Vertical curve length (m)
A = Algebraic difference in grades (%)

Sight Distance at Intersections
Figure 910-16c

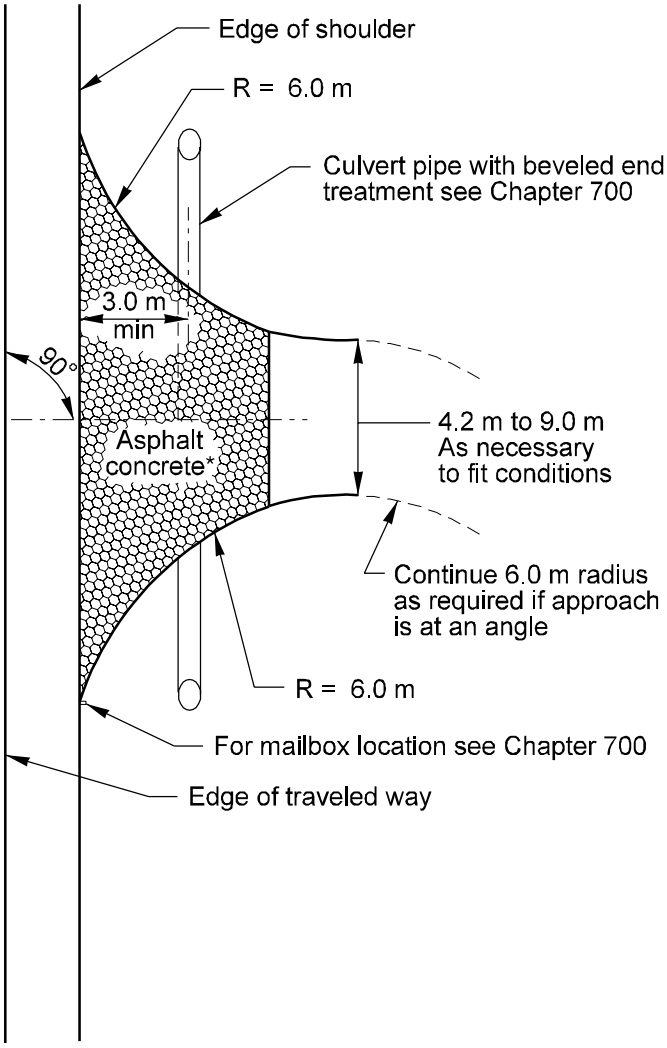

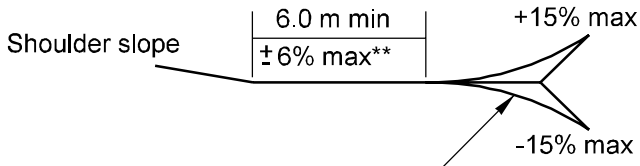

Vertical curves not to exceed a 85 mm hump or a 50 mm depression in a 3.0 m chord.

*When the travel lanes are bituminous, a similar type may be used on the approaches.

** ± 8% max difference from shoulder slope.

Noncommercial Approach Design Template A

Figure 920-3

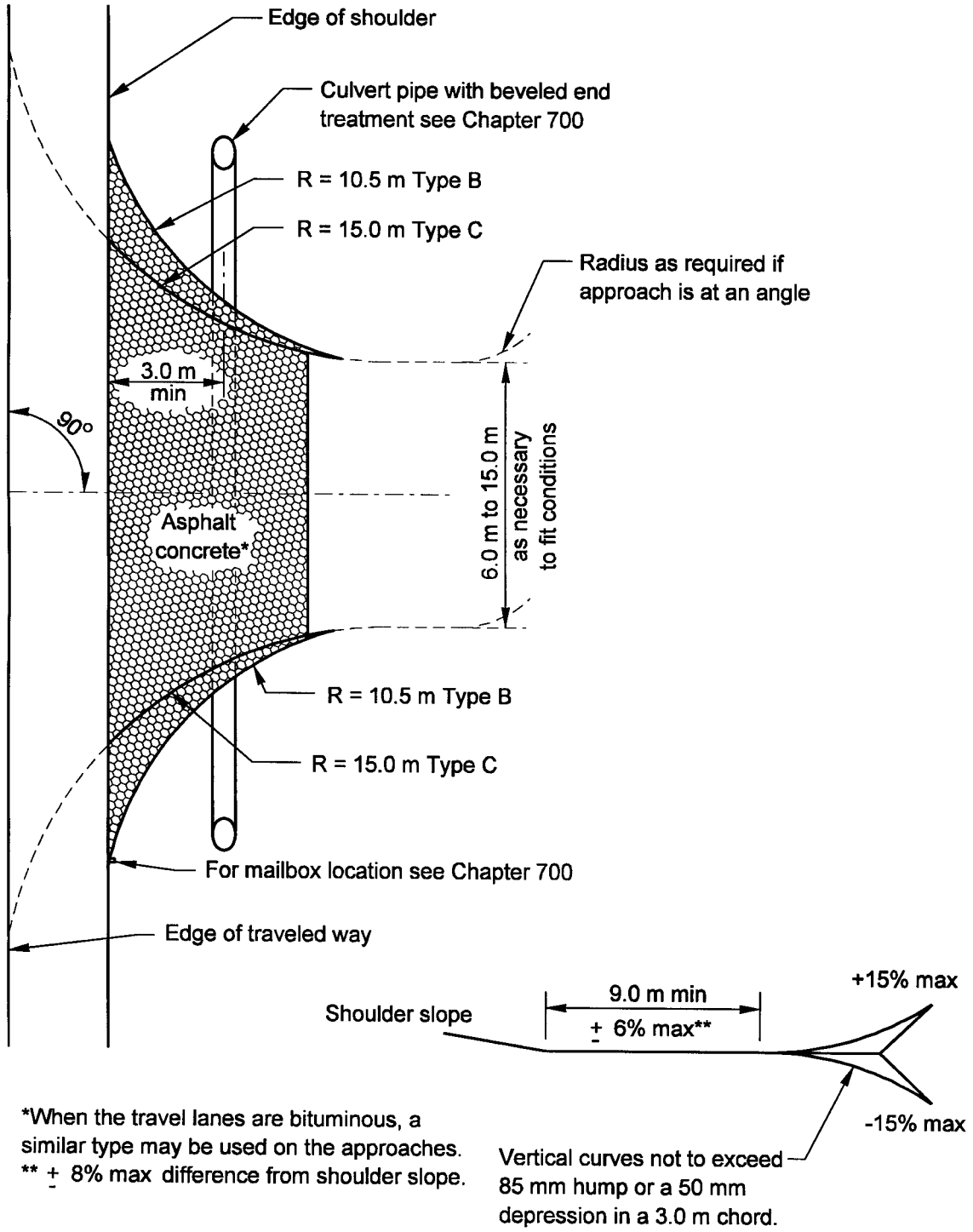

*When the travel lanes are bituminous, a similar type may be used on the approaches.
** ± 8% max difference from shoulder slope.

Noncommercial Approach Design Template B and C
Figure 920-4

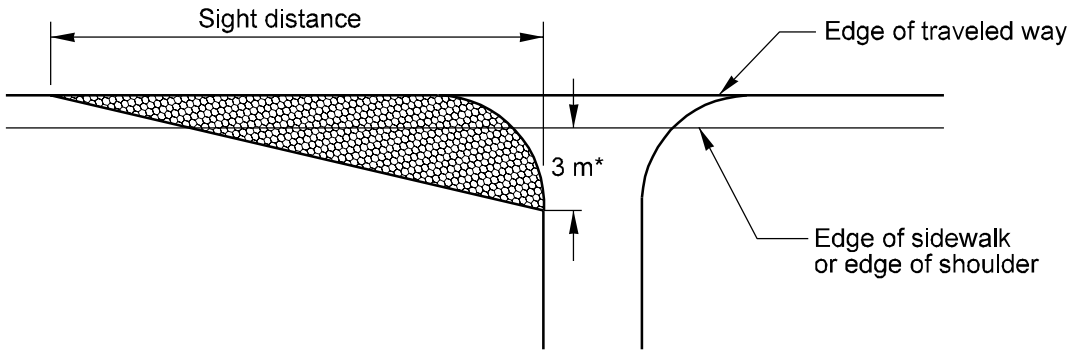

*Not to exceed 5.4 m from the edge of traveled way.

Posted Speed Limit (mph)	25	30	35	40	50	60	70
Category I Road Approach	45	55	70	85	115	155	190
Category II Road Approach	45	60	80	100	145	195	260

These distances require an approaching vehicle to reduce speed or stop to prevent a collision.

Design Category III road approach sight distance as an intersection (see Chapter 910).

For road approaches where left turns are not allowed, a sight triangle need only be provided to the left, as shown.

For road approaches where left turns are allowed, provide a sight triangle to the right in addition to the one to the left. The sight distance to the right is measured along the center line of the roadway.

For additional information on calculating the sight triangle, see Chapter 910.

Road Approach Sight Distance
Figure 920-6

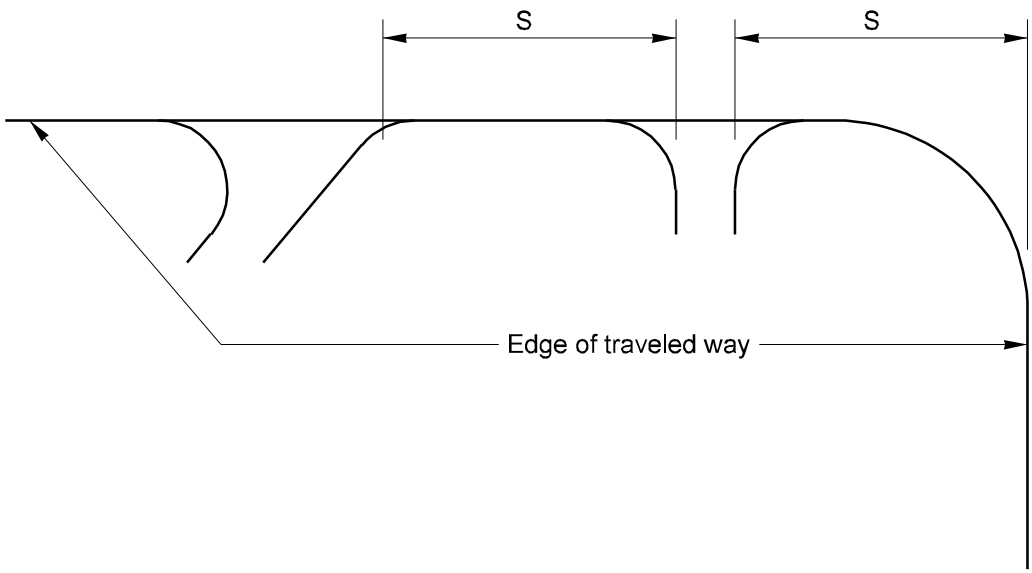

Highway Access Management Class	1	2	3	4	5
S	402.4 m	201.2 m	100.6 m	76.2 m	38.1 m
	1320 ft	660 ft	330 ft	250 ft	125 ft

Road Approach Spacing and Corner Clearance

Note:

For Road Approach Spacing, S is the distance between closest edge of the traveled way of the two road approaches, measured along the edge of the traveled way of the highway.

For corner clearance, S is measured from the closest edge of the traveled way of the crossroad to the closest edge of the traveled way of the road approach, measured along the edge of the traveled way of the highway.

Road Approach Spacing and Corner Clearance
Figure 920-7

Ramp Design Speed (mph)	25-30	35-40	45 and above
Desirable Grade (%)	5	4	3
Maximum Grade (%)	7	6	5
On one-way ramps down grades may be 2% greater.			

Maximum Ramp Grade
Figure 940-2

(4) Cross Section

Provide the minimum ramp widths given in Figure 940-3. Ramp traveled ways may require additional width to these minimums as one-way turning roadways. See Chapter 640 for additional information and roadway sections.

Number of Lanes		1	2
Traveled Way(1)		4.5(2)	7.5(3)
Shoulders	Right	2.4	2.4
	Left	0.6	1.2
Medians(4)		1.8	1.8

(1)See Chapter 1050 for additional width when an HOV lane is present.
(2)May be reduced to 3.6 on tangents.
(3)Add 3.6 m for each additional lane.
(4)In addition to shoulder width.

Ramp Widths
Figure 940-3

Cross slope and superelevation requirements for ramp traveled way and shoulders are as given in Chapter 640 for roadways.

Whenever feasible, make the ramp cross slope at the ramp beginning or ending station equal to the cross slope of the through lane pavement. Where space is limited and superelevation runoff is long or when parallel connections are used, the superelevation transition may be ended beyond (for on-ramps) or begun in advance of (for off-ramps) the ramp beginning or ending station, provided that the algebraic difference in cross slope at the edge of the through lane and the cross slope of the ramp does not exceed 4%. In such cases, ensure smooth transitions for the edge of traveled way.

(5) Ramp Lane Increases

When off-ramp traffic and left-turn movements volume at a crossroad terminal cause congestion, it may be desirable to add lanes to the ramp to reduce the queue length caused by turning conflicts. Make provision for the addition of ramp lanes whenever ramp exit or entrance volumes, after the design year, are expected to result in poor service. See Chapter 620 for width transition design.

(6) Ramp Meters

Ramp meters are used to allow a measured or regulated amount of traffic to enter the freeway. When operating in the “measured” mode, they release traffic at a measured rate to keep downstream demand below capacity and improve system travel times. In the “regulated” mode, they break up platoons of vehicles that occur naturally or result from nearby traffic signals. Even when operating at near capacity, a freeway main line can accommodate merging vehicles one or two at a time, while groups of vehicles will cause main line flow to break down.

The location of the ramp meter is a balance between the storage and acceleration requirements. Locate the ramp meter to maximize the available storage and so that the acceleration lane length, from a stop to the freeway main line design speed, is available from the stop bar to the merging point. With justification, the main line design speed may be reduced to the average running speed during the hours of meter operation. See 940.06(4) for information on the design of on-connection acceleration lanes. See Chapter 860 for additional information on the design of ramp meters.

Driver compliance with the signal is required for the ramp meter to have the desired results. Consider enforcement areas with ramp meters.

Consider HOV bypass lanes with ramp meters. See Chapter 1050 for design data for ramp meter bypass lanes.

- Design and construct temporary ramps as if they were permanent unless second stage construction is planned to rapidly follow the first. In all cases, design the connection to meet the safety needs of the traffic. (See Figure 940-16.)

940.09 Interchange Plans

Figure 940-17 is a sample showing the general format and data required for interchange design plans.

Compass directions (W-S Ramp) or crossroad names (E-C Street) may be used for ramp designation to realize the most clarity for each particular interchange configuration and circumstance.

Include the following as applicable:

- Classes of highway and design speeds for main line and crossroads (Chapter 440).
- Curve data on main line, ramps, and crossroads.
- Numbers of lanes and widths of lanes and shoulders on main line, crossroads, and ramps.
- Superelevation diagrams for the main line, the crossroad, and all ramps (may be submitted on separate sheets).
- Channelization (Chapter 910).
- Stationing of ramp connections and channelization.
- Proposed right of way and access control treatment (Chapter 1420).
- Delineation of all crossroads, existing and realigned (Chapter 910).
- Traffic data necessary to justify the proposed design. Include all movements.

Prepare a preliminary contour grading plan for each completed interchange. Show the desired contours of the completed interchange including details of basic land formation, slopes, graded areas or other special features. Coordinate the contour grading with the drainage design and the roadside development plan.

Alternative designs considered, studied, and rejected may be shown as reduced scale diagrams with a brief explanation of the advantages and disadvantages of the alternative designs, including the recommended design.

940.10 Documentation

The following documents are to be preserved in the project file. See Chapter 330.

- ☐ Interchange plan
- ☐ Access Point Decision Report (Chapter 1425)
- ☐ On-connection type justification
- ☐ Off-connection type justification
- ☐ Justification for ramp metering main line speed reduction
- ☐ Weaving analysis and design
- ☐ Alternative discussion and analysis

P65:DP/DMM

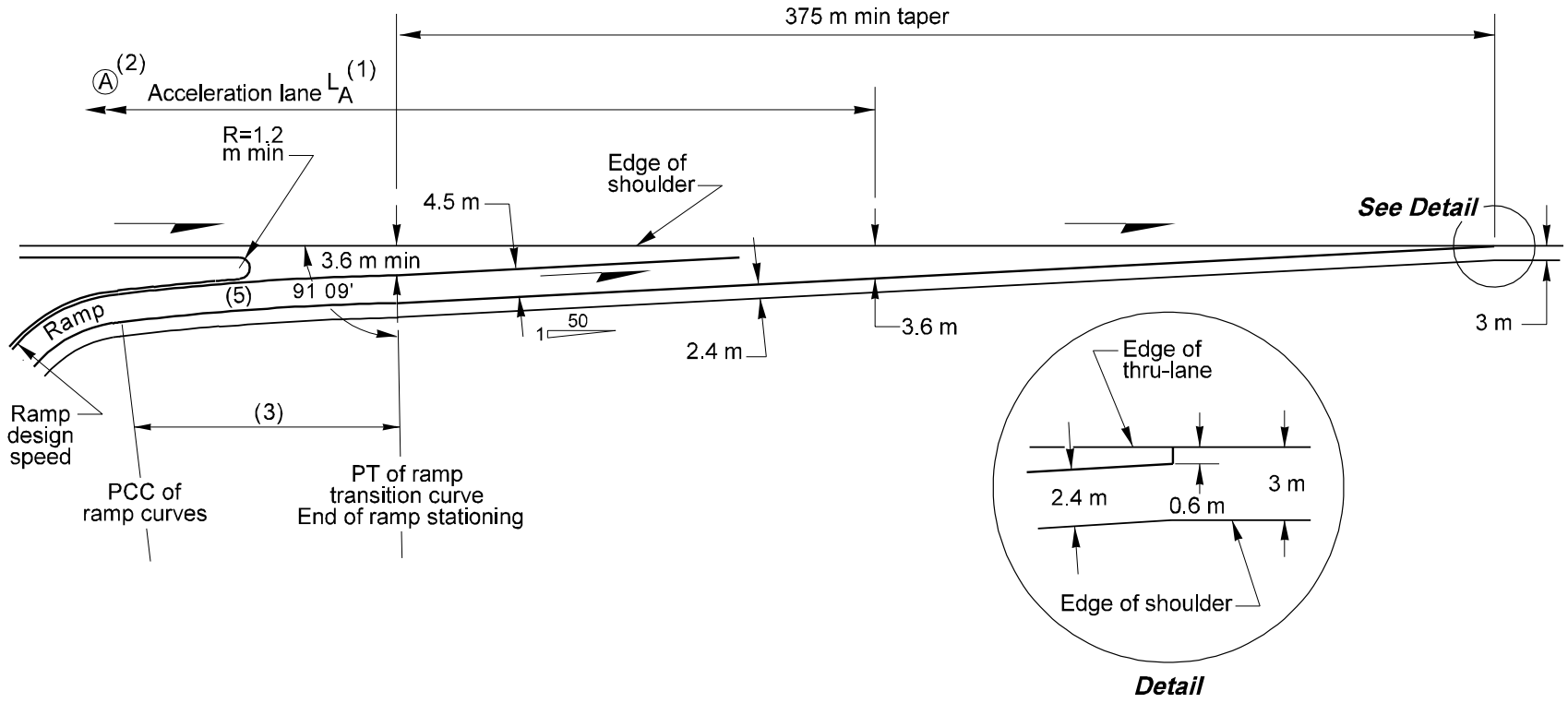

Notes:

(1) See Figure 940-8 for acceleration lane length L_A.

(2) Point Ⓐ is the PT of the last curve designed at the ramp design speed.

(3) A transition curve with a minimum radius of 900 m is desirable. The desirable length is 90 m. When the main line is on a curve to the left, the transition may vary from a 900 m radius to tangent to the main line.

(4) For striping, see the Standard Plans.

(5) For ramp lane and shoulder widths, see Figure 940-3.

On-Connection (Single-Lane, Taper Type)
Figure 940-9a

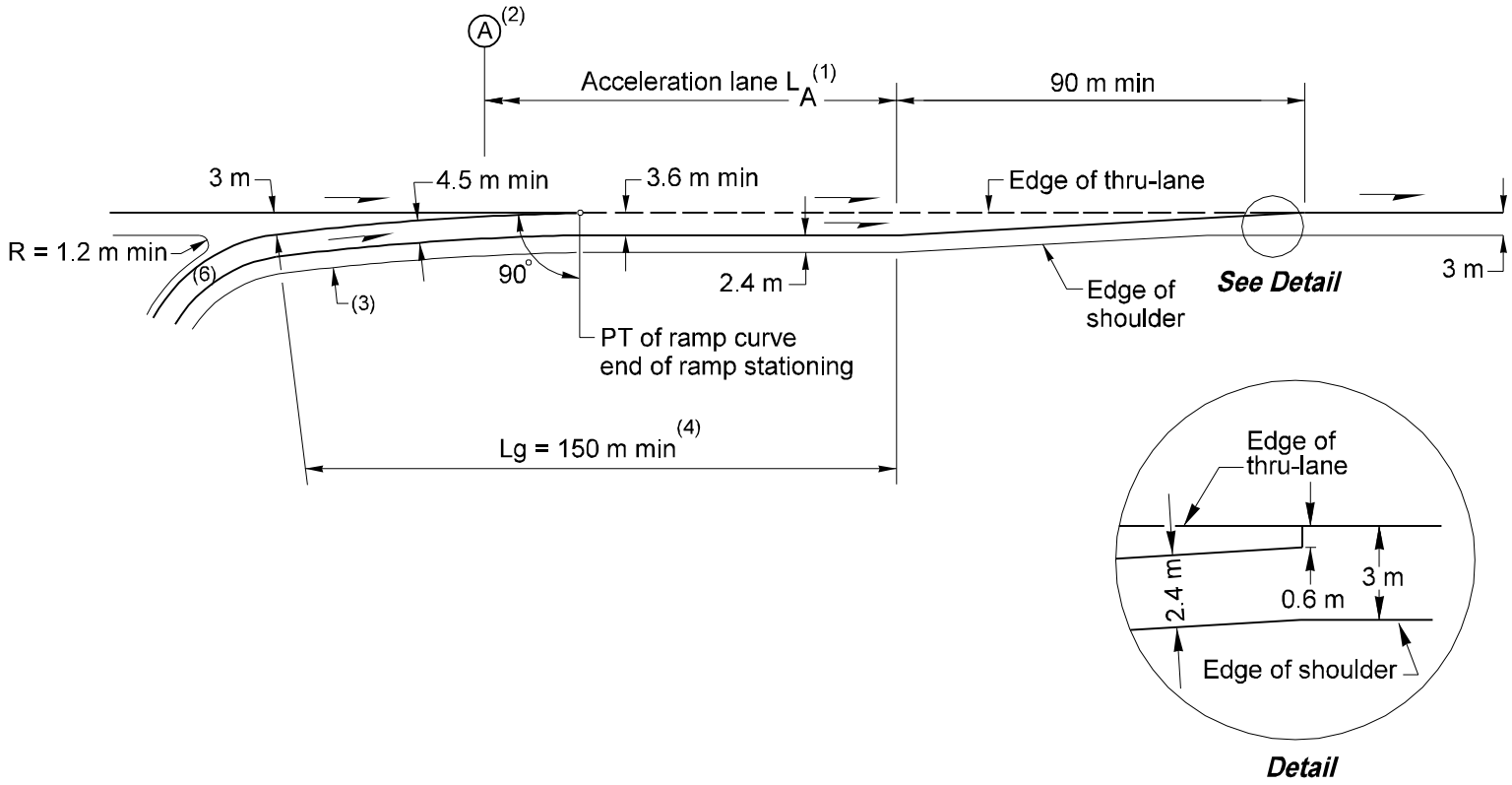

Notes:

(1) See Figure 940-8 for acceleration lane length L_A.

(2) Point (A) is the PT of the last curve designed at the ramp design speed.

(3) A transition curve with a minimum radius of 900 m is desirable. The desirable length is 90 m. When the main line is on a curve to the left, the transition may vary from a 900 m radius to tangent to the main line.

(4) L_g is the gap acceptance length. It is desirable that 90 m be provided from the ramp PT to the end of the on-connection lane.

(5) For striping, see the Standard Plans

(6) For ramp lane and shoulder widths, see Figure 940-3.

On-Connection (Single-Lane, Parallel Type)
Figure 940-9b

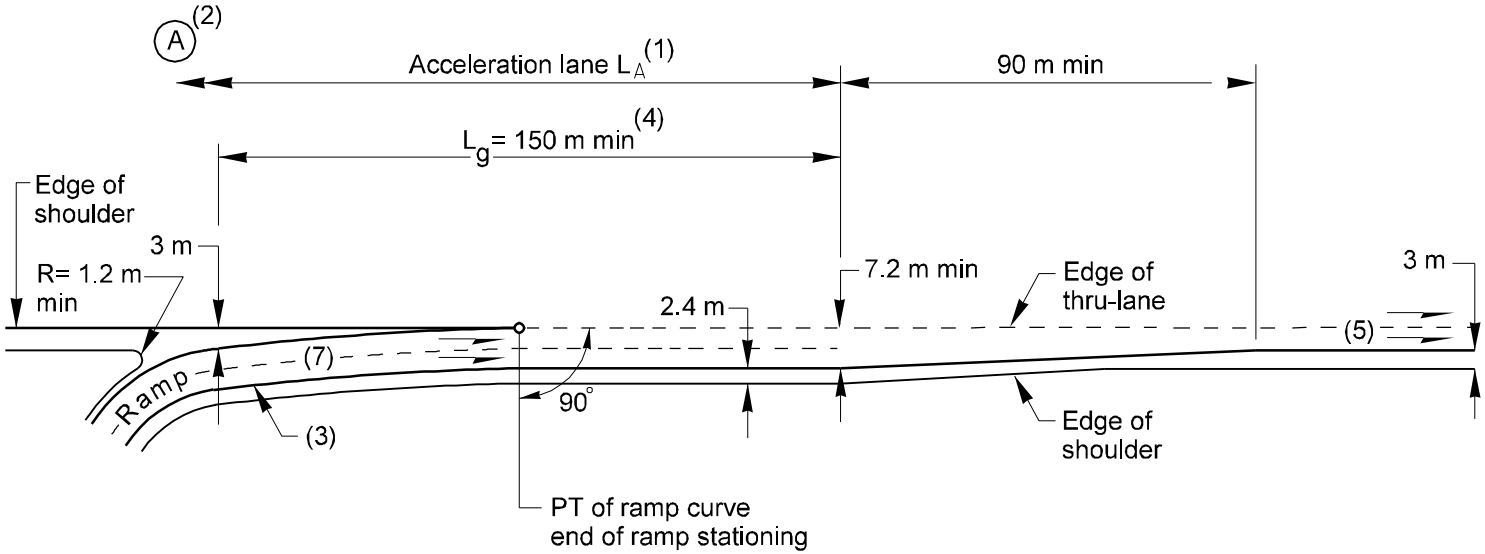

Notes:

(1) See Figure 940-8 for acceleration lane length L_A.

(2) Point (A) is the PT of the last curve designed at the ramp design speed.

(3) A transition curve with a minimum radius of 900 m is desirable. The desirable length is 90 m. When the main line is on a curve to the left, the transition may vary from a 900 m radius to tangent to the main line.

(4) L_g is the gap acceptance length. It is desirable that 90 m be provided from the ramp PT to the end of the on-connection lane.

(5) Added lane or 450 m auxiliary lane, plus 180 m taper.

(6) For striping, see the Standard Plans

(7) For ramp lane and shoulder widths, see Figure 940-3.

On-Connection (Two-Lane, Parallel Type)
Figure 940-9c

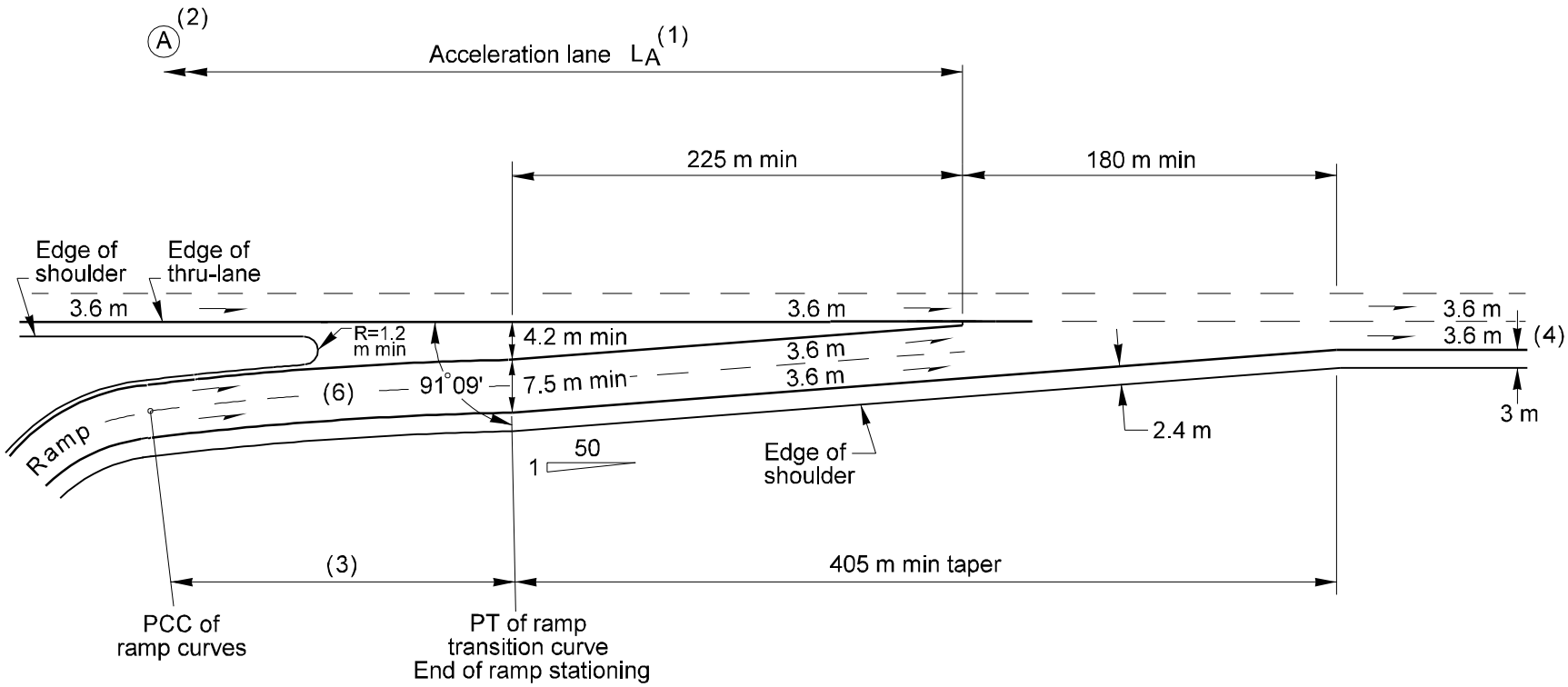

Notes:

(1) See Figure 940-8 for acceleration lane length L_A.

(2) Point (A) is the PT of the last curve designed at the ramp design speed.

(3) A transition curve with a minimum radius of 900 m is desirable. The desirable length is 90 m. When the main line is on a curve to the left, the transition may vary from a 900 m radius to tangent to the main line.

(4) Added lane or 450 m auxiliary lane, plus 180 m taper.

(5) For striping, see the Standard Plans

(6) For ramp lane and shoulder widths, see Figure 940-3.

On-Connection (Two-Lane, Taper Type)
Figure 940-9d

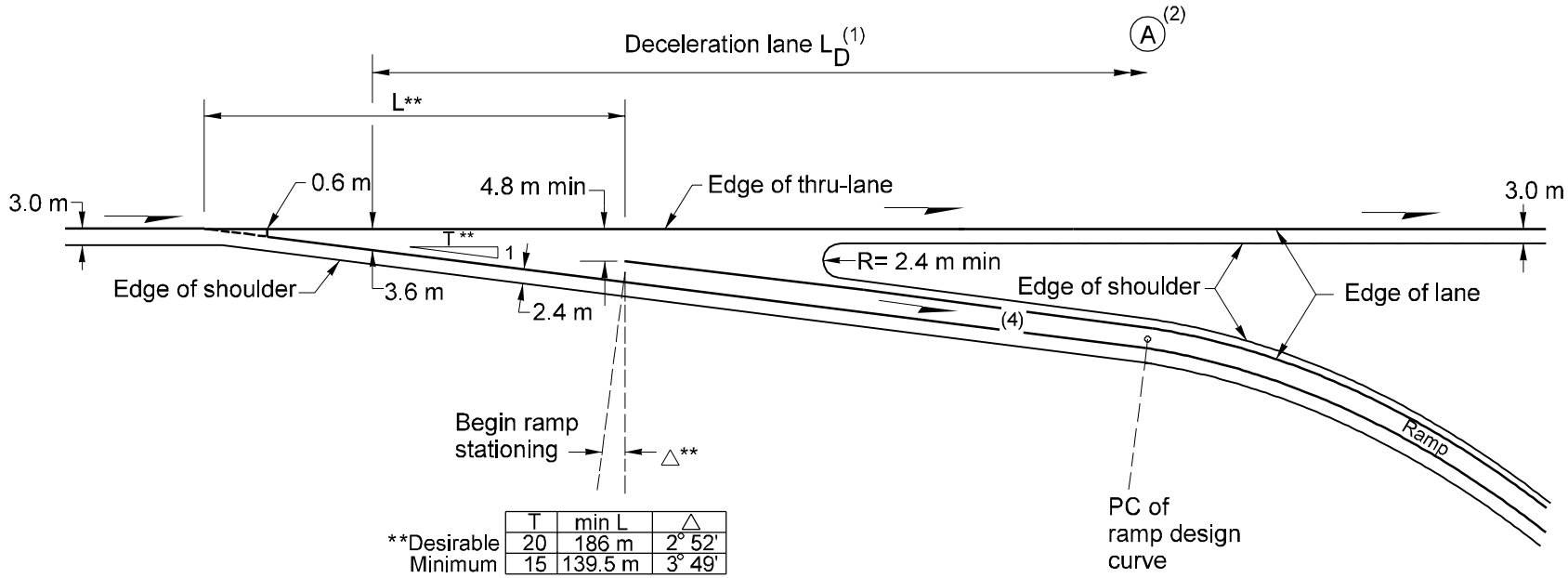

	T	min L	△
**Desirable	20	186 m	2° 52'
Minimum	15	139.5 m	3° 49'

Notes:

(1) See Figure 940-10 for deceleration lane length L_D.

(2) Point (A) is the PC of the first curve designed at the ramp design speed.

(3) For striping, see the Standard Plans

(4) For ramp lane and shoulder widths, see Figure 940-3.

Off-Connection (Single-Lane, Taper Type)
Figure 940-12a

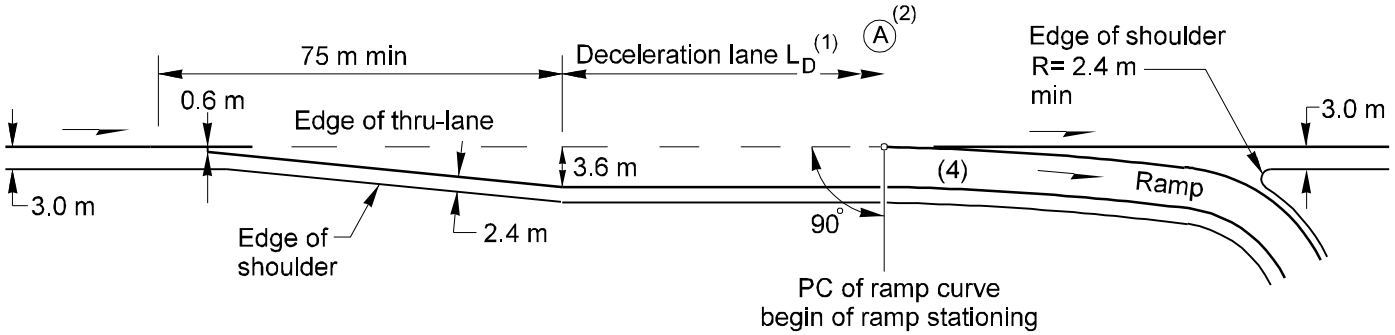

Notes:

(1) See Figure 940-10 for deceleration lane length L_D.

(2) Point (A) is the PC of the first curve designed at the ramp design speed.

(3) For striping, see the Standard Plans.

(4) For ramp lane and shoulder widths, see Figure 940-3.

Off-Connection (Single Lane, Parallel Type)
Figure 940-12b

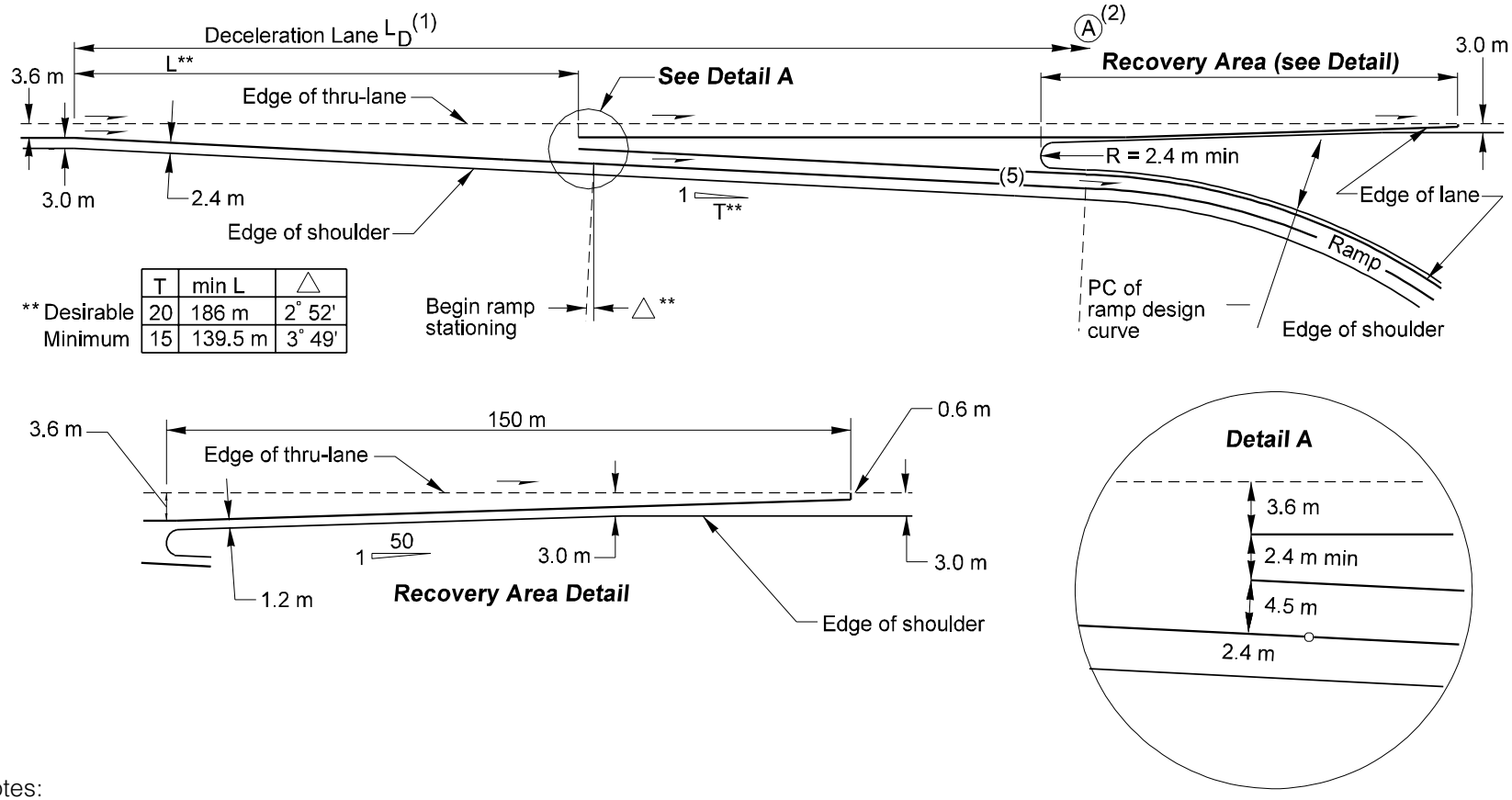

Notes:

(1) See Figure 940-10 for deceleration lane length L_D.

(2) Point Ⓐ is the PC of the first curve designed at the ramp design speed.

(3) Auxiliary lane between closely spaced interchanges to be dropped.

(4) For striping, see the Standard Plans.

(5) For ramp lane and shoulder widths, see Figure 940-3.

Off-Connection (Single-Lane, One-Lane Reduction)
Figure 940-12c

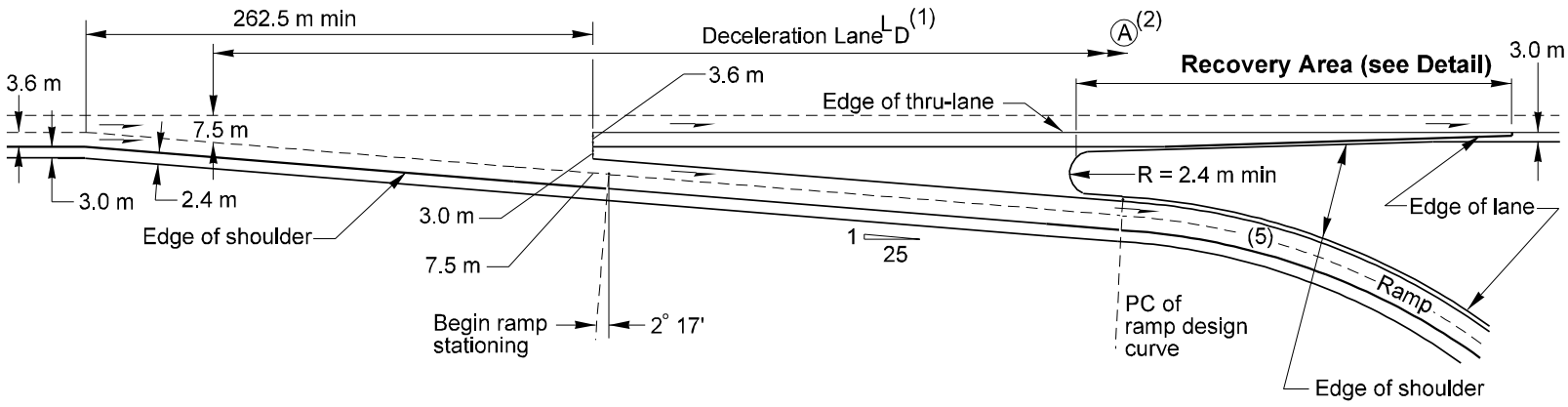

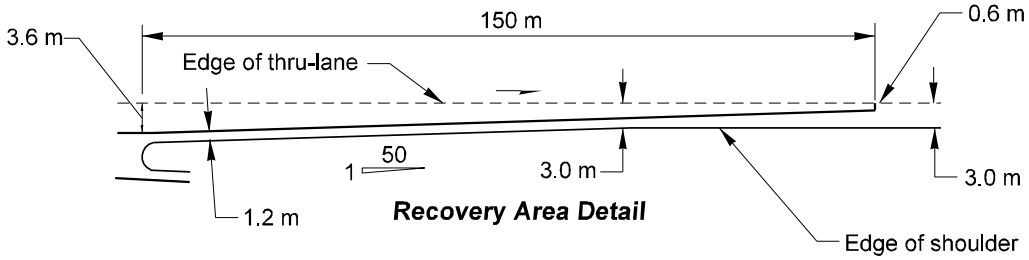

Notes:

(1) See Figure 940-10 for deceleration lane length L_D.

(2) Point Ⓐ is the PC of the first curve designed at the ramp design speed.

(3) Lane to be dropped or auxiliary lane with a minimum length of 450 m with a 90 m taper.

(4) For striping, see the Standard Plans.

(5) For ramp lane and shoulder widths, see Figure 940-3.

Off-Connection (Two-Lane, Taper Type)
Figure 940-12d

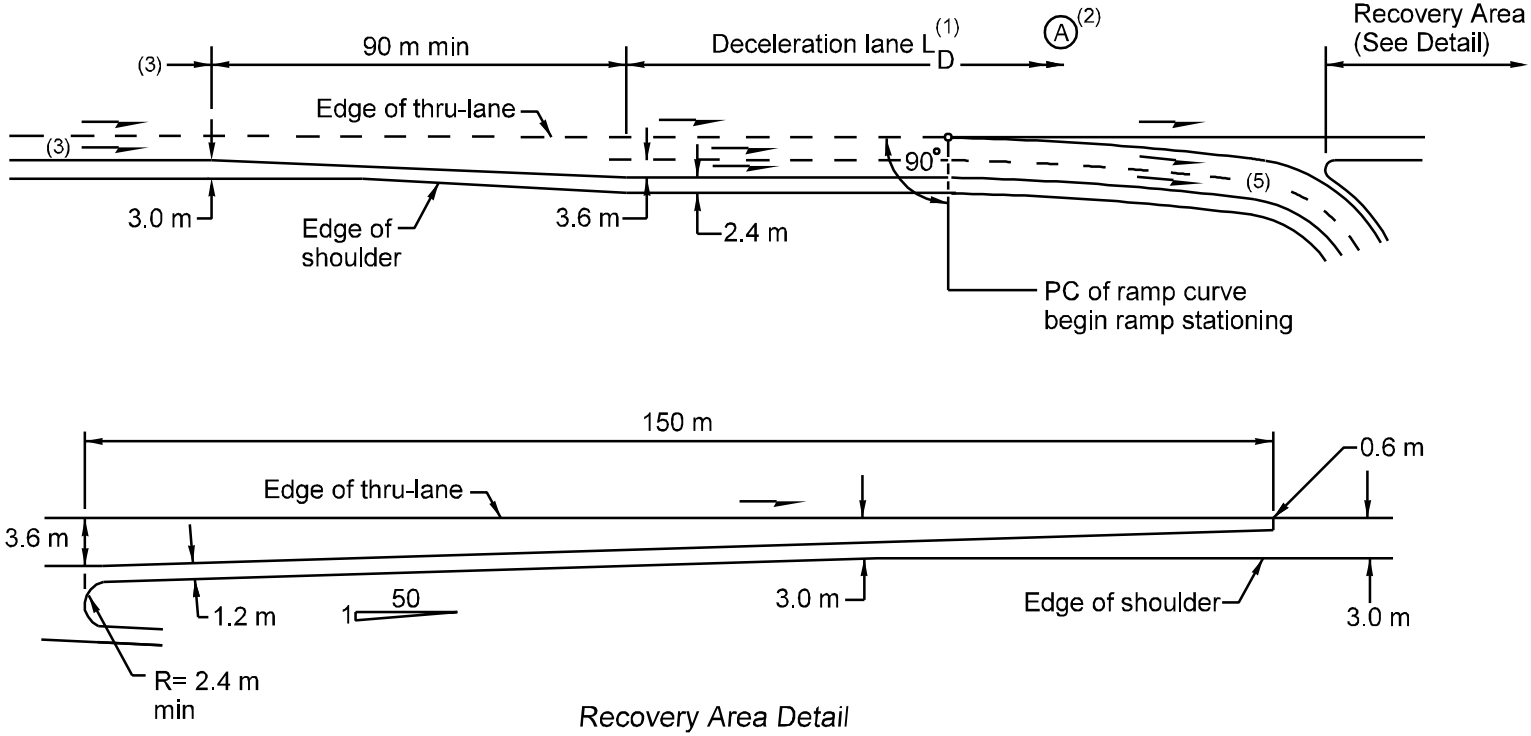

Notes:

(1) See Figure 940-10 for deceleration lane length L_D.

(2) Point Ⓐ is the PC of the first curve designed at the ramp design speed.

(3) Lane to be dropped or auxiliary lane with a minimum length of 400 m with a 90 m taper.

(4) For striping, see the Standard Plans.

(5) For ramp lane and shoulder widths, see Figure 940-3.

Off-Connection (Two-Lane, Parallel Type)
Figure 940-12e

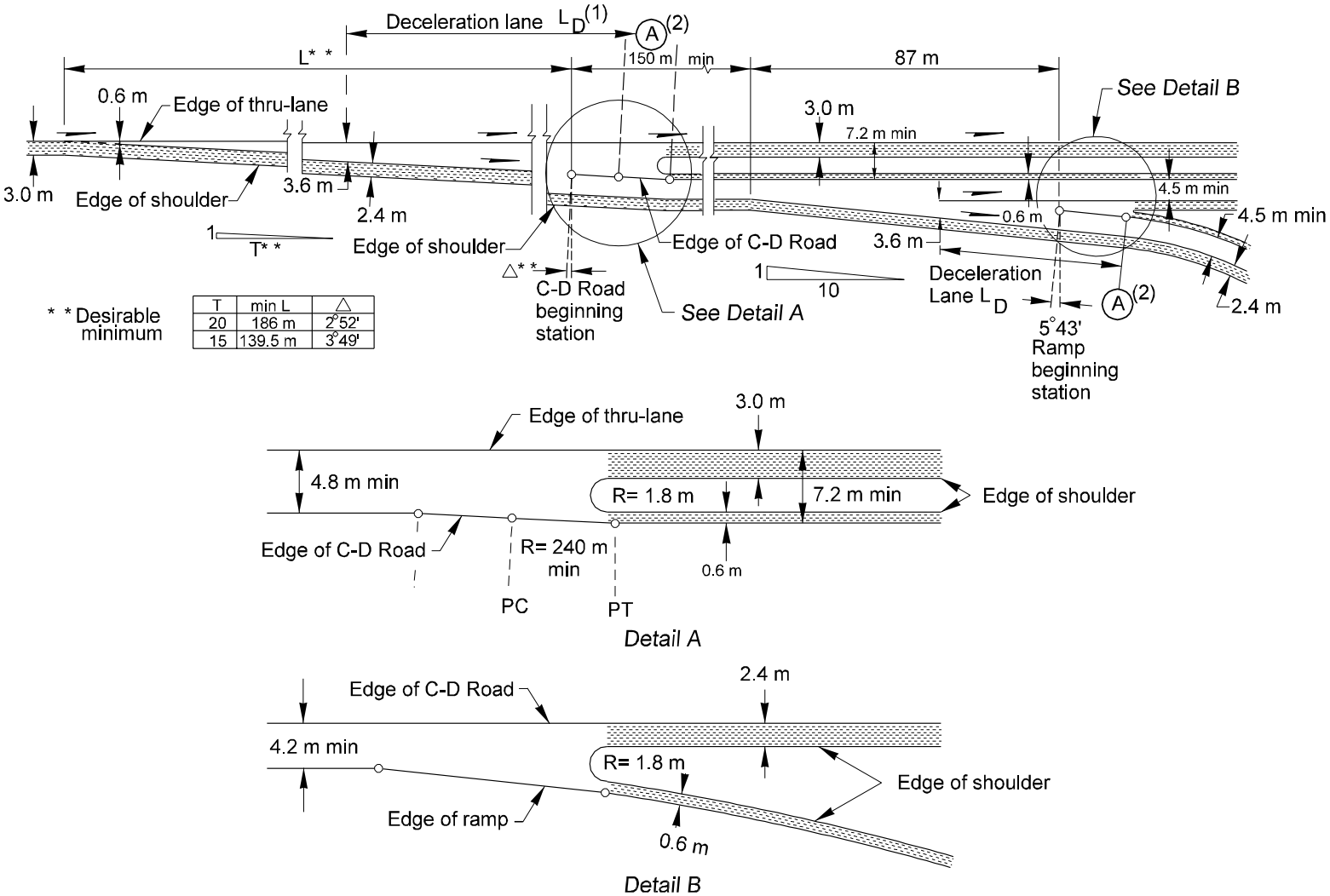

T	min L	△
20	186 m	2°52'
15	139.5 m	3°49'

Notes:

(1) See Figure 940-10 for deceleration lane length L_D.

(2) Point (A) is the PC of the first curve designed at the ramp design speed.

(3) For striping, see the Standard Plans.

Collector Distributor (Off-Connections)
Figure 940-13b

1010 Auxiliary Lanes

1010.01 General
1010.02 References
1010.03 Definitions
1010.04 Climbing Lanes
1010.05 Passing Lanes
1010.06 Slow Moving Vehicle Turnouts
1010.07 Shoulder Driving for Slow Vehicles
1010.08 Emergency Escape Ramps
1010.09 Chain-Up Areas
1010.10 Documentation

1010.01 General

Auxiliary lanes are used to comply with capacity requirements; to maintain lane balance; to accommodate speedx change, weaving, and maneuvering for entering and exiting traffic; or to encourage carpools, vanpools, and the use of transit.

See the Traffic Manual and the MUTCD for signing of auxiliary lanes.

Although slow vehicle turnouts, shoulder driving for slow vehicles, and chain-up areas are not auxiliary lanes they are covered in this chapter because they perform a similar function.

See the following chapters for additional information:

Chapter	Subject
910	Turn lanes
910	Speed change lanes at intersections
940	Speed change lanes at interchanges
940	Collector distributor roads
940	Weaving lanes
1050	High occupancy vehicle lanes

1010.02 References

Revised Code of Washington (RCW) 46.61, Rules of the Road.

Manual on Uniform Traffic Control Devices for Streets and Highways (MUTCD), USDOT, FHWA; including the *Washington State Modifications to the MUTCD*, M 24-01. WSDOT *Traffic Manual*, M 51-02, WSDOT.

A Policy on Geometric Design of Highways and Streets (Green Book), AASHTO, 1994

Emergency Escape Ramps for Runaway Heavy Vehicles, FHWA-T5-79-201, March 1978

Highway Capacity Manual (Special Report 209), Transportation Research Board

NCHRP Synthesis 178, *Truck Escape Ramps*, Transportation Research Board

1010.03 Definitions

auxiliary lane The portion of the roadway adjoining the through lanes for parking, speed change, turning, storage for turning, weaving, truck climbing, passing, and other purposes supplementary to through-traffic movement.

climbing lane An auxiliary lane used for the diversion of slow traffic from the through lane.

emergency escape ramp A roadway leaving the main roadway designed for the purpose of slowing and stopping out-of-control vehicles away from the main traffic stream.

lane A strip of roadway used for a single line of vehicles.

lateral clearance The distance from the edge of traveled way to a roadside object.

posted speed The maximum legal speed as posted on a section of highway using regulatory signs.

passing lane An auxiliary lane on a two-lane highway used to provide the desired frequency of safe passing zones.

roadway The portion of a highway, including shoulders, for vehicular use. A divided highway has two or more roadways.

shoulder The portion of the roadway contiguous with the traveled way, primarily for accommodation of stopped vehicles, emergency use, lateral support of the traveled way, and use by pedestrians and bicycles.

slow moving vehicle turnouts A widened shoulder area to provide room for a slow moving vehicle to pull safely out of the through traffic, allow vehicles following to pass, and return to the through lane.

traveled way The portion of the roadway intended for the movement of vehicles, exclusive of shoulders and lanes for parking, turning, and storage for turning.

1010.04 Climbing Lanes

(1) General

Normally, climbing lanes are associated with truck traffic, but they may also be considered in recreational or other areas that are subject to slow moving traffic. Climbing lanes are designed independently for each direction of travel.

Generally, climbing lanes are provided when the requirements of two warrants - speed reduction and level of service - are exceeded. The requirements of either warrant may be waived if, for example, slow moving traffic is demonstrably causing a high accident rate or congestion that could be corrected by the addition of a climbing lane. However, under most conditions climbing lanes are built when the requirements of both warrants are satisfied.

(2) Warrant No. 1 — Speed Reduction

Figure 1010-2a shows how the percent and length of grade affect vehicle speeds. The data is based on a typical heavy truck.

The maximum allowable entrance speed, as reflected on the graphs, is 55 mph. Note that this is the maximum value to be used regardless of the posted speed of the highway. When the posted speed is above 55 mph, use 55 mph in place of the posted speed. Examine the profile at least 0.4 km preceding the grade to obtain a reasonable approach speed.

If a vertical curve makes up part of the length of grade, approximate the equivalent uniform grade length.

Whenever the gradient causes a 15 mph speed reduction below the posted speed limit for typical heavy truck for either two-lane or multilane highways, the speed reduction warrant is satisfied (see Figure 1010-2b for an example).

(3) Warrant No. 2 — Level of Service (LOS)

The level of service warrant for two-lane highways is fulfilled when the up-grade traffic volume exceeds 200 VPH and the up-grade truck volume exceeds 20 VPH. On multilane highways, use Figure 1010-3.

(4) Design

When a climbing lane is justified, design it in accordance with Figure 1010-4. Provide signing and delineation to identify the presence of the auxiliary lane. Begin climbing lanes at the point where the speed reduction warrant is met and end them where the warrant ends for multilane and 90 m beyond for 2-lane highways. Consider extending the auxiliary lane over the crest to improve vehicle acceleration and the sight distance.

Design climbing lane width equal to that of the adjoining through lane and at the same cross slope as the adjoining lanes. When ever possible, maintain the shoulders at standard width for the class of highway. However, on two-way two-lane highways, the shoulder may be reduced to 1.2 m with justification.

1010.05 Passing Lanes

(1) General

Passing lanes are desirable where a sufficient number and length of safe passing zones do not exist and the speed reduction warrant for a climbing lane is not satisfied. Figure 1010-5 may be used to determine if a passing lane is recommended.

(2) Design

When a passing lane is justified, design it in accordance with Figure 1010-6. Make the lane long enough to permit several vehicles to pass. Passing lanes longer than 3 km can cause the driver to lose the sense that the highway is basically a two-lane facility.

Passing lanes are preferably four-lane sections.

A three-lane section may be used, however. Alternate the direction of the passing lane at short intervals to ensure passing opportunities for both directions and to discourage illegal actions of frustrated drivers.

Make the passing lane width equal to the adjoining through lane and at the same cross slope. Full-width shoulders for the highway class are preferred; however, with justification, the shoulders may be reduced to 1.2 m. Provide adequate signing and delineation to identify the presence of an auxiliary lane.

1010.06 Slow Moving Vehicle Turnouts

(1) General

On a two-lane highway where passing is unsafe, a slow moving vehicle is required, by RCW 46.61.427, to turn off the through lane wherever a safe turnout exists, in order to permit the following vehicles to proceed. A slow moving vehicle is one that is traveling at a speed less than the normal flow of traffic, behind which five or more vehicles are formed in a line.

A slow moving vehicle turnout is not an auxiliary lane. Its purpose is to provide sufficient room for a slow moving vehicle to safely pull out of through traffic and stop if necessary, allow vehicles following to pass, then return to the through lane. Generally, a slow moving vehicle turnout is provided on existing roadways where passing opportunities are limited, where slow moving vehicles such as trucks and recreational vehicles are predominant, and where the cost to provide a full auxiliary lane would be prohibitive.

(2) Design

Base the design of a slow moving vehicle turnout primarily on sound engineering judgment and Figure 1010-7. Design may vary from one location to another. A minimum length of 30 m provides adequate storage, since additional storage is provided within the tapers and shoulders. The maximum length is 0.5 km including tapers. Surface turnouts with a stable unyielding material such as BST or ACP with adequate structural strength to support the heavier traffic.

Locate slow vehicle turnouts where at least Design Stopping Sight Distance (Chapter 650) is available, decision sight distance is preferred, so that vehicles can safely reenter the through traffic. Sign slow moving vehicle turnouts to identify their presence.

When a slow moving vehicle turnout is to be built, document the location and why it was selected.

1010.07 Shoulder Driving for Slow Vehicles

(1) General

For projects where climbing or passing lanes are justified, but are not within the scope of the project, or where meeting the warrants for these lanes are borderline, the use of a shoulder driving section is an alternative.

Review the following when considering a shoulder driving section:

- Horizontal and vertical alignment
- Character of traffic
- Presence of bicycles
- Clear zone (Chapter 700)

(2) Design

When designing a shoulder for shoulder driving, use a minimum length of 180 m. The minimum shoulder width is 2.4 m with 3.0 m preferred. When barrier is present, the minimum width is 3.0 m with 3.6 m preferred. Adequate structural strength for the anticipated traffic is necessary and may require reconstruction. Select locations where the side slope meets the requirements of Chapter 640 for new construction and Chapter 430 for existing roadways. When a transition is required at the end of a shoulder driving section, use a 50:1 taper.

Signing for shoulder driving is required. Install guideposts when shoulder driving is to be permitted at night.

Document the need for shoulder driving and why a lane is not being built.

1010.08 Emergency Escape Ramps

(1) General

Consider an emergency escape ramp whenever long steep down grades are encountered. In this situation the possibility exists of a truck losing its brakes and going out of control at a high speed. Consult local maintenance personnel and check traffic accident records to determine if an escape ramp is justified.

(2) Design

(a) **Type.** Escape ramps are one of the following types:

- Gravity escape ramps are ascending grade ramps paralleling the traveled way. They are commonly built on old roadways. Their long length and steep grade can present the driver with control problems, not only in stopping, but with rollback after stopping. Gravity escape ramps are the least desirable design.
- Sand pile escape ramps are piles of loose, dry sand dumped at the ramp site, usually not more than 120 m in length. The deceleration is usually high and the sand can be affected by weather conditions; therefore, they are less desirable than arrester beds. However, where space is limited they may be suitable.
- Arrester beds are parallel ramps filled with a smooth, coarse, free-draining gravel. They stop the out-of-control vehicle by increasing the rolling resistance. Arrester beds are commonly built on an up grade to add the benefits of gravity to the rolling resistance. However, successful arrester beds have been built on a level or descending grade.

(b) **Location.** The location of an escape ramp will vary depending on terrain, length of grade, and roadway geometrics. The best locations include in advance of a critical curve, near the bottom of grade, or before a stop. It is desirable that the ramp leave the roadway on a tangent at least 5 km from the beginning of the down-grade.

(c) **Length.** Lengths will vary depending on speed, grade, and type of design used. The minimum length is 60 m. Calculate the stopping length using the following equation:

$$L = \frac{V^2}{0.98(R \pm G)}$$

Where:

L = stopping distance (m)
V = entering speed (mph)
R = rolling resistance (see Figure 1010-1)
G = grade of the escape ramp (%)

Speeds of out-of control trucks rarely exceed 90 mph; therefore, an entering speed of 90 mph is preferred. Other entry speeds may be used when justification and the method used to determine the speed is documented.

Material	R
Roadway	1
Loose crushed aggregate	5
Loose noncrushed gravel	10
Sand	15
Pea gravel	25

Rolling Resistance (R)
Figure 1010-1

(d) **Width.** The width of each escape ramp will vary depending on the needs of the individual situation. It is desirable for the ramp to be wide enough to accommodate more than one vehicle. The desirable width of an escape ramp to accommodate two out-of-control vehicles is 12 m and the minimum width is 8 m.

(e) The following items are additional considerations in the design of emergency escape ramps:

- If possible, at or near the summit, provide a pull-off brake-check area. Also, include informative signing about the upcoming escape ramp in this area.
- A free draining, smooth, noncrushed gravel is preferred for an arrester bed. To assist in smooth deceleration of the vehicle, taper the depth of the bed from 75 mm at the entry to a full depth of 600 to 750 mm in not less than 30 m.
- Mark and sign in advance of the ramp. Discourage normal traffic from using or parking in the ramp. Sign escape ramps in accordance with the guidance contained in the MUTCD for runaway truck ramps.

- Provide drainage adequate to prevent the bed from freezing or compacting.
- Consider including an impact attenuator at the end of the ramp if space is limited.
- A surfaced service road adjacent to the arrester bed is needed for wreckers and maintenance vehicles to remove vehicles and make repairs to the arrester bed. Anchors are desirable at 90 m intervals to secure the wrecker when removing vehicles from the bed.

A typical example of an arrester bed is shown in Figure 1010-8.

Include justification, all calculations, and any other design considerations in the documentation of an emergency escape ramp documentation.

1010.09 Chain-Up Area

Provide chain-up areas to allow chains to be put on vehicles out of the through lanes at locations where traffic enters chain enforcement areas. Provide chain-off areas to remove chains out of the through lanes for traffic leaving chain enforcement areas.

Chain-up or chain-off areas are widened shoulders, designed as shown in Figure 1010-9. Locate chain-up and chain-off areas where the grade is 6% or less and preferably on a tangent section.

Consider illumination for chain-up and chain-off areas on multilane highways. When deciding whether or not to install illumination, consider traffic volumes during the hours of darkness and the availability of power.

1010.10 Documentation

The following documents are to be preserved in the project file. See Chapter 330.

- ☐ Documentation that climbing lane warrant 1 has been met
- ☐ Documentation that climbing lane warrant 2 has been met
- ☐ Justification for waiving climbing lane warrant 1 or 2
- ☐ Justification for passing lanes
- ☐ Slow moving vehicle turnout documentation
- ☐ Emergency escape ramp documentation

P65:DP/DMM

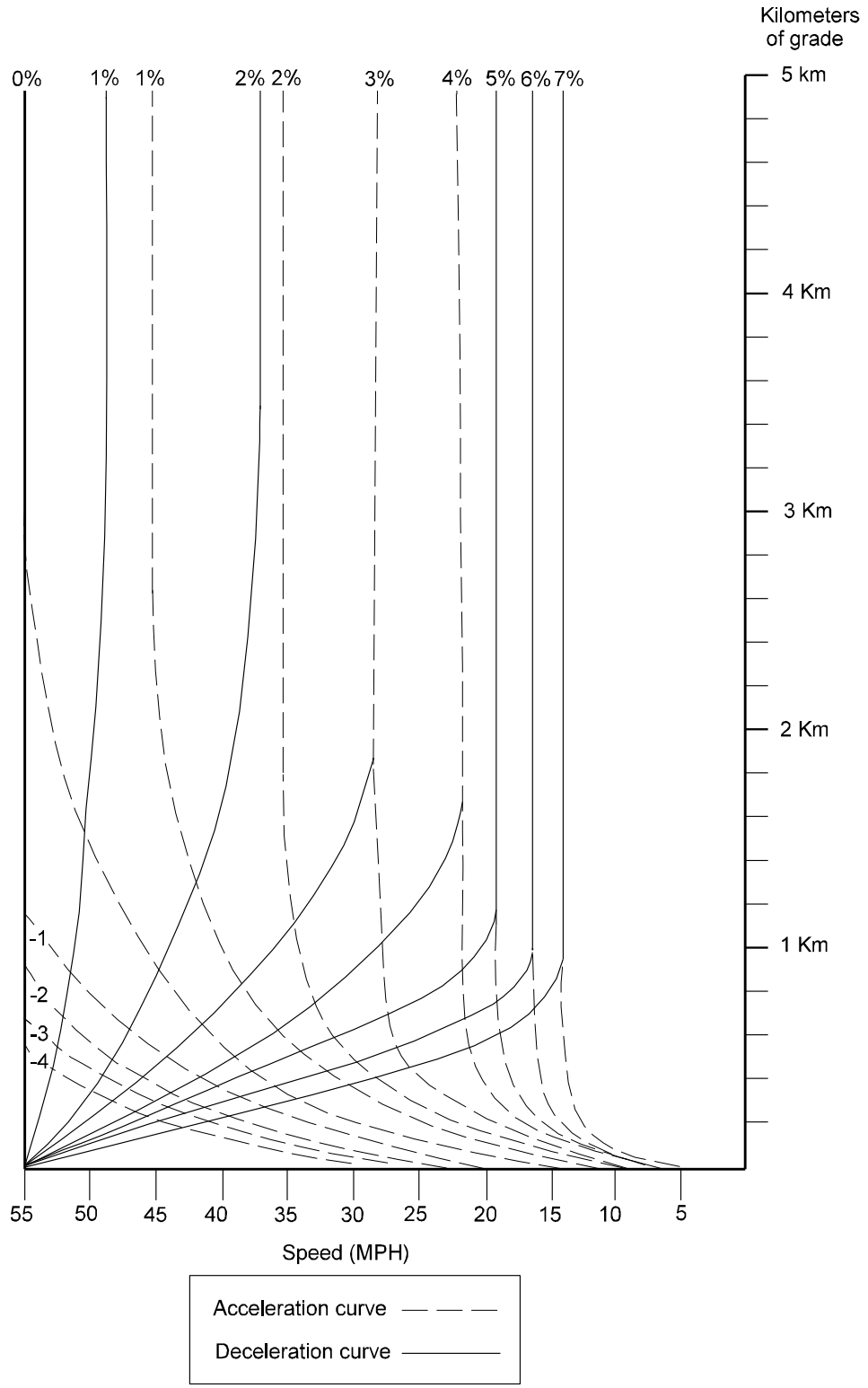

Performance For Heavy Truck
Figure 1010-2a

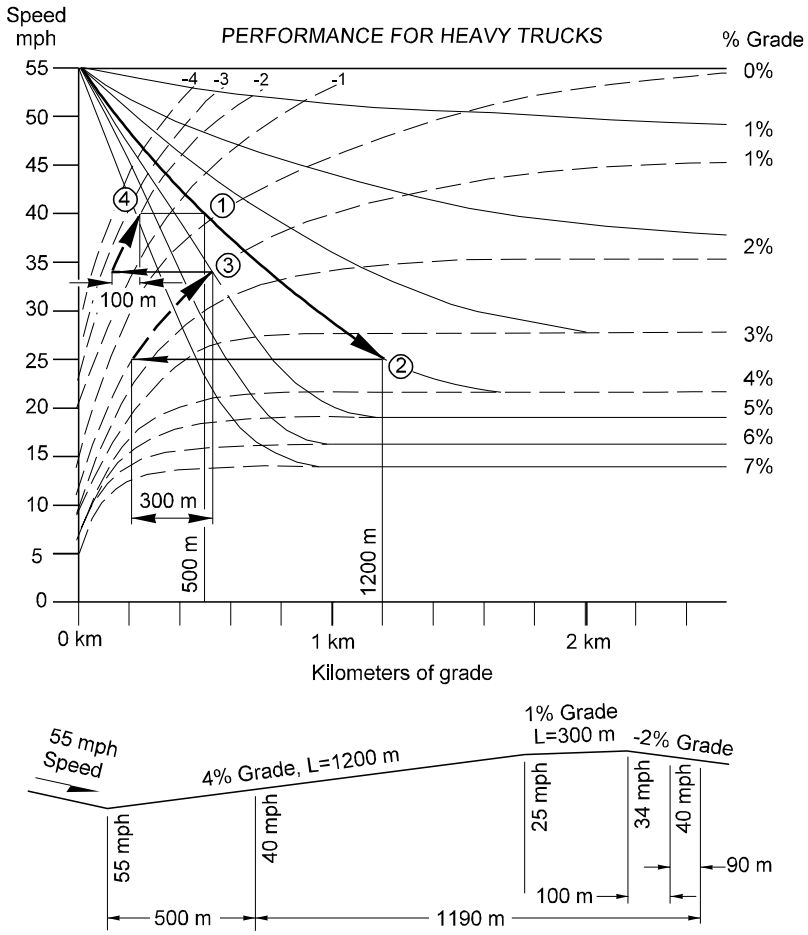

Given: A 2-lane highway meeting the level of service warrant, with the above profile, and a 55 mph posted speed.

Determine: Is the climbing lane warranted and, if so, how long?

Solution:

1. Follow the 4% grade deceleration curve from a speed of 55 mph to a speed of 40 mph at 500 m. The speed reduction warrant is met and a climbing lane is needed.
2. Continue on the 4% grade deceleration curve to 1200 m. Note that the speed at the end of the 4% grade is 25 mph.
3. Follow the 1% grade acceleration curve from a speed of 25 mph for 300 m. Note that the speed at the end of the 1% grade is 34 mph.
4. Follow the -2% grade acceleration curve from a speed of 34 mph to a speed of 40 mph, ending the speed reduction warrant. Note the distance required is 100 m.
5. The total auxiliary lane length is (1200-500)+300+100+90=1190 m. 90 m is added to the speed reduction warrant for a 2-lane highway, see the text and Figure 1010-4.

Speed Reduction Example
Figure 1010-2b

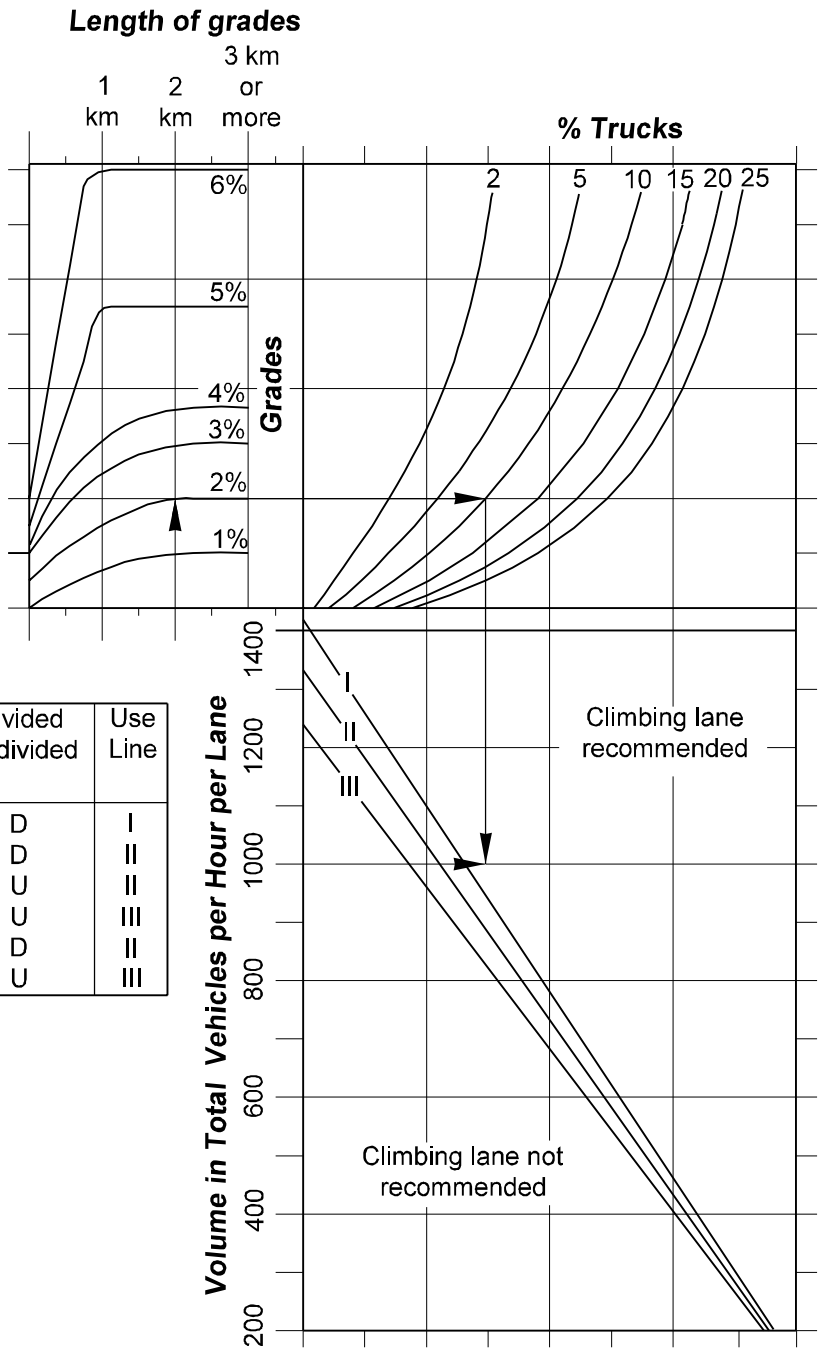

Lane Width (m)	Lateral Clearance (m)	Divided Undivided	Use Line
3.6	≥ 1.8	D	I
3.6	< 1.8	D	II
3.6	≤ 1.8	U	II
3.6	< 1.8	U	III
3.3	All	D	II
3.3	All	U	III

Example

2% grade for 2 km
10% trucks
3.6 m lanes
lateral clearance
≥ 1.8
4 lane, divided
DDHV = 2000
From the chart,
climbing lane is
recommended.

Level of Service — Multilane
Figure 1010-3

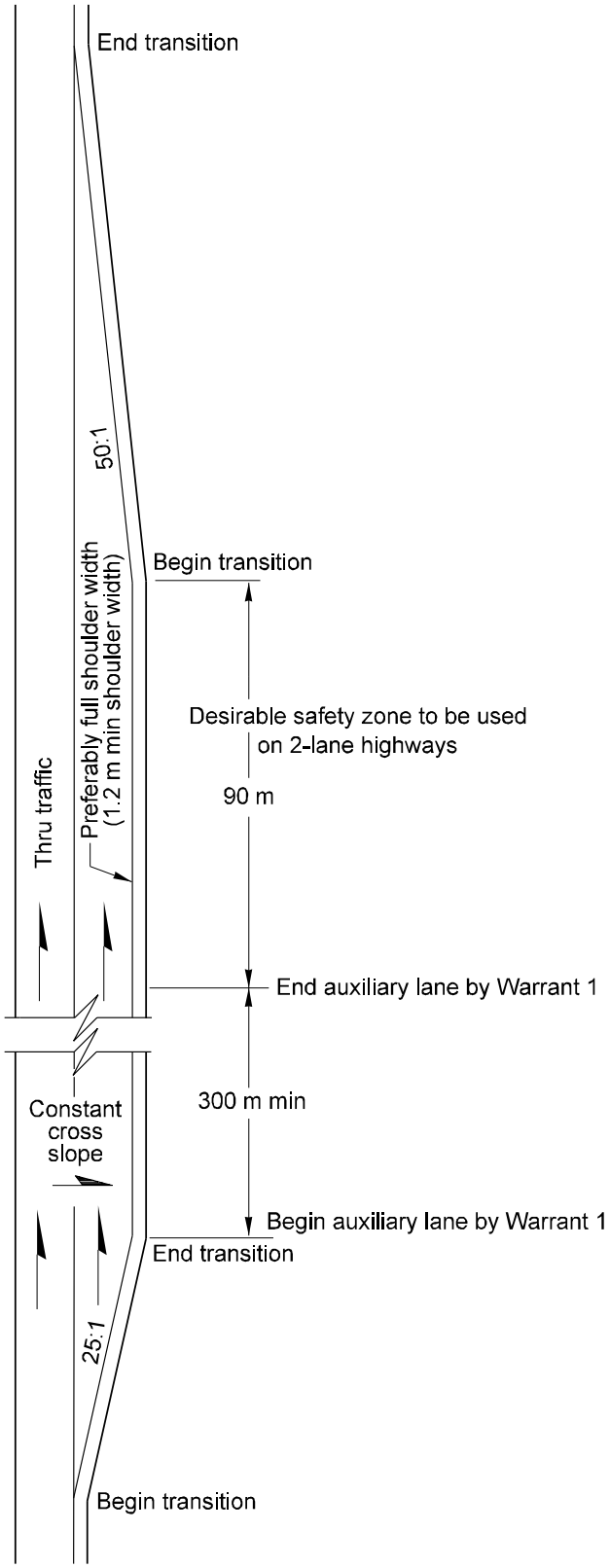

Auxiliary Climbing Lane
Figure 1010-4

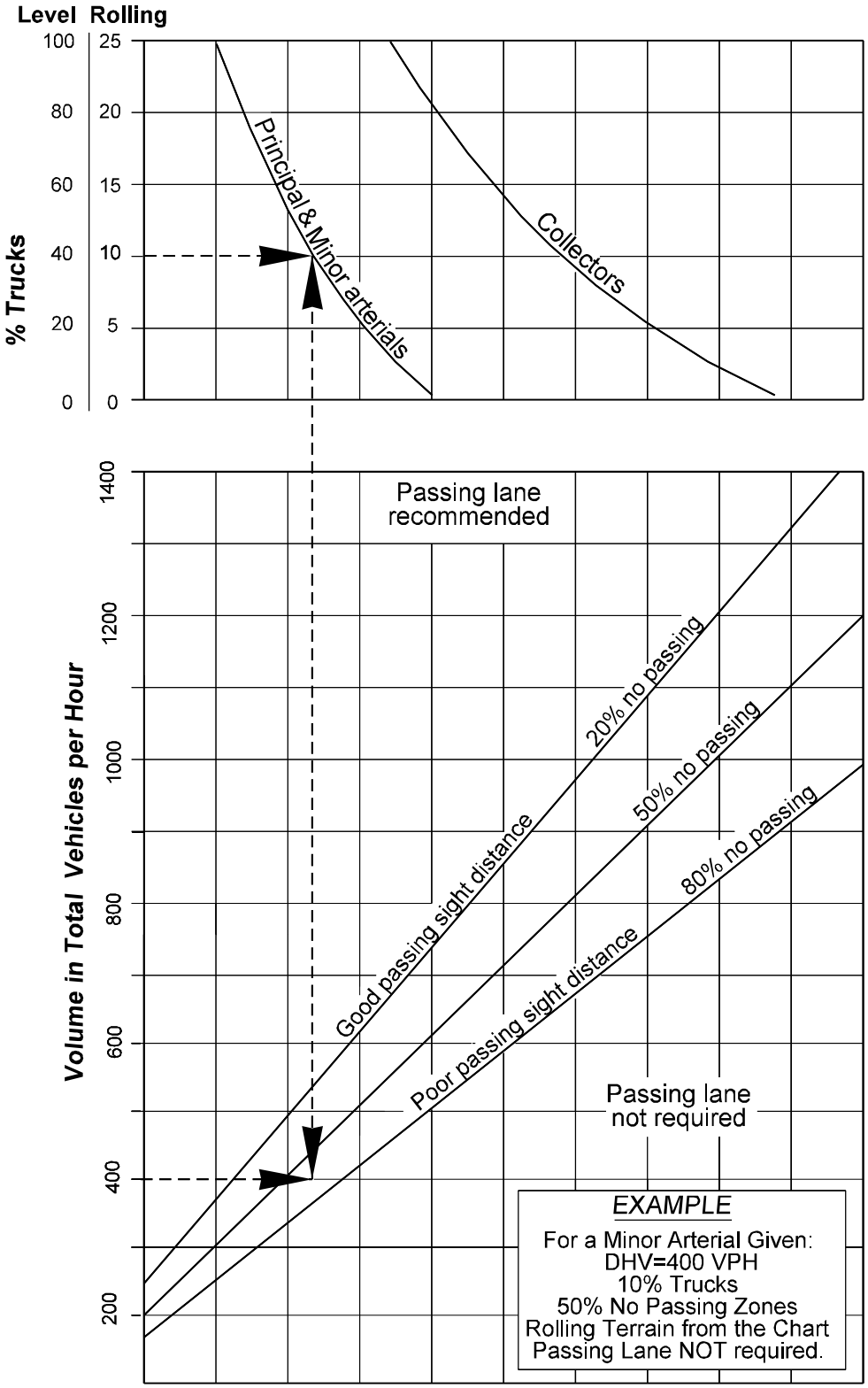

Warrant For Passing Lanes
Figure 1010-5

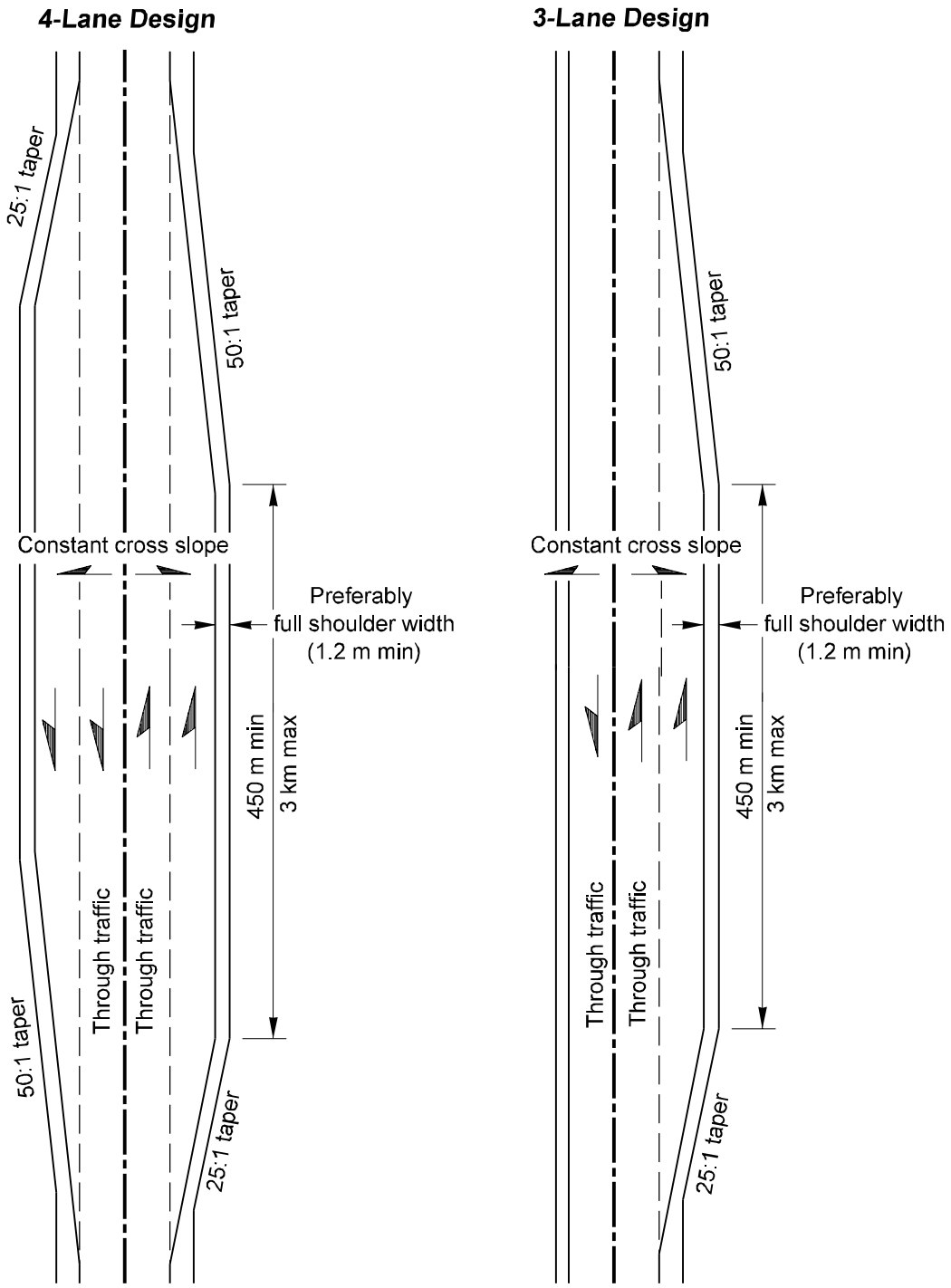

Auxiliary Passing Lane
Figure 1010-6

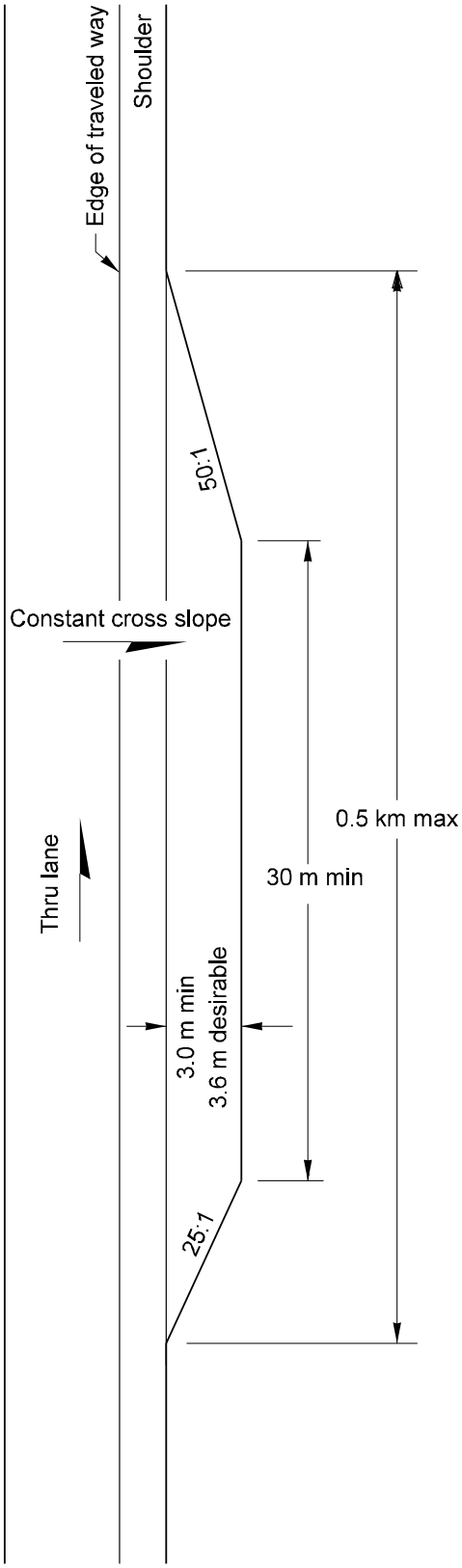

Slow Moving Vehicle Turnout
Figure 1010-7

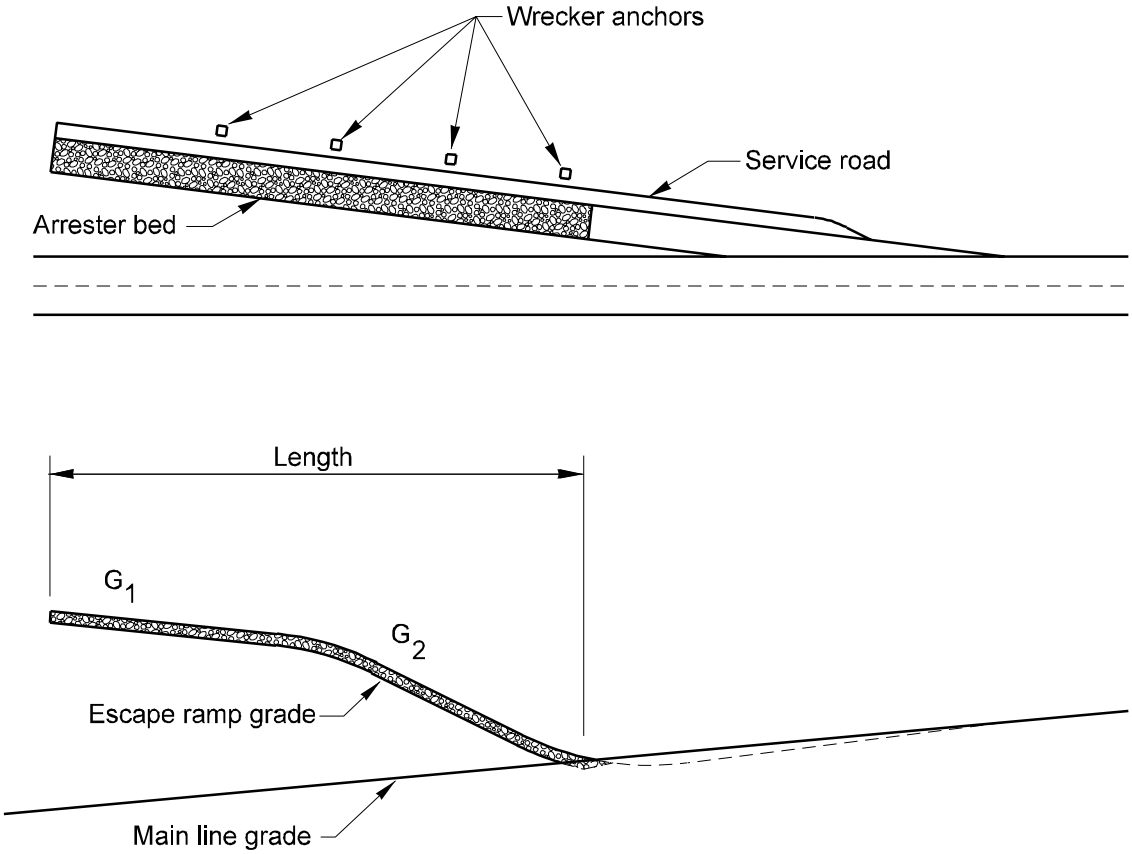

Typical Emergency Escape Ramp
Figure 1010-8

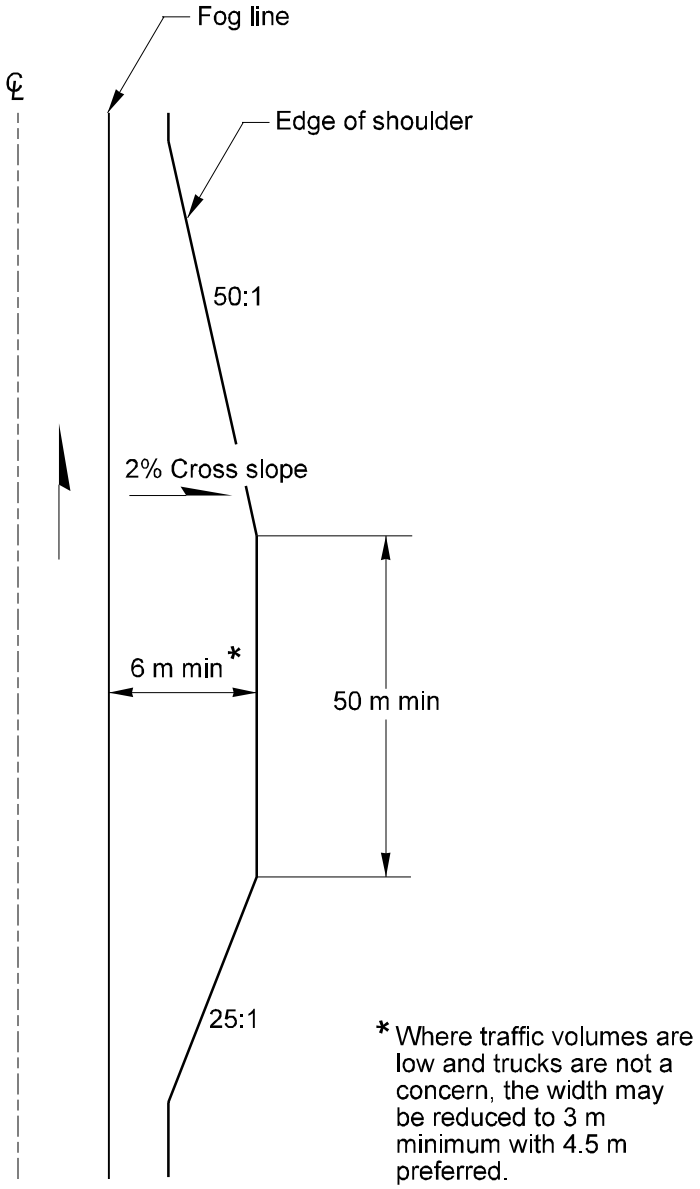

Chain-Up/Chain-Off Area
Figure 1010-9

ø	VARIABLES (meters)				
	A	B	C	D	E
30°	25.5	9	15	9	30
35°	27	10.5	16.5	10.5	31.5
40°	28.5	10.5	18	10.5	33
45°	30	13.5	19.5	13.5	34.5

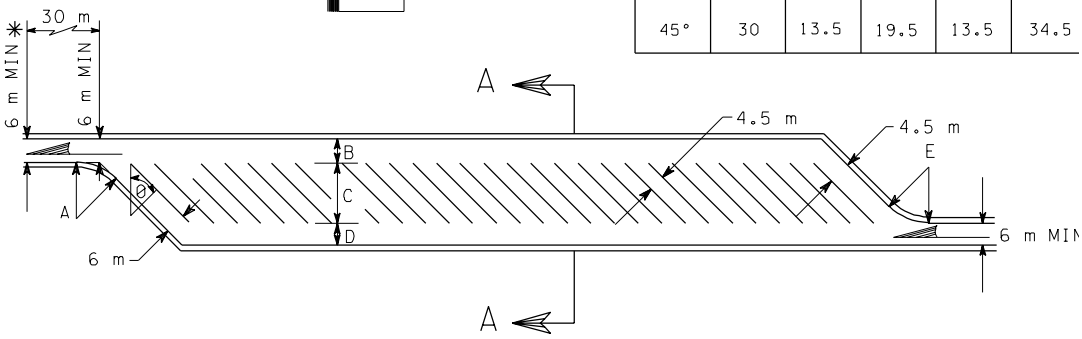

✳ Note: If exit ramp is tangent or has curve radii greater than 300 m, this width may be reduced to 4.2 m.

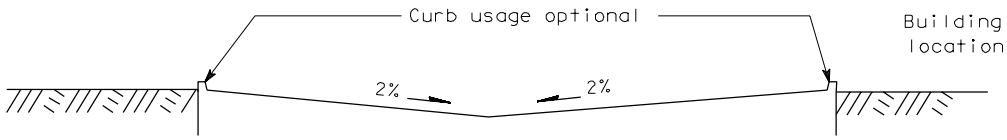

SECTION A-A

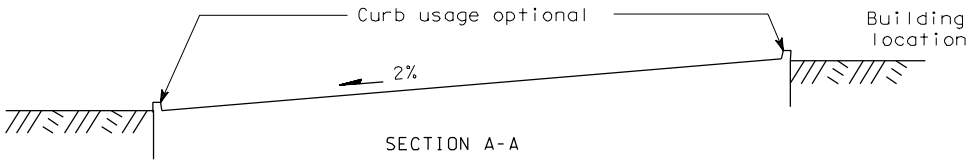

SECTION A-A
Alternate

Typical Truck Storage
Figure 1030-1

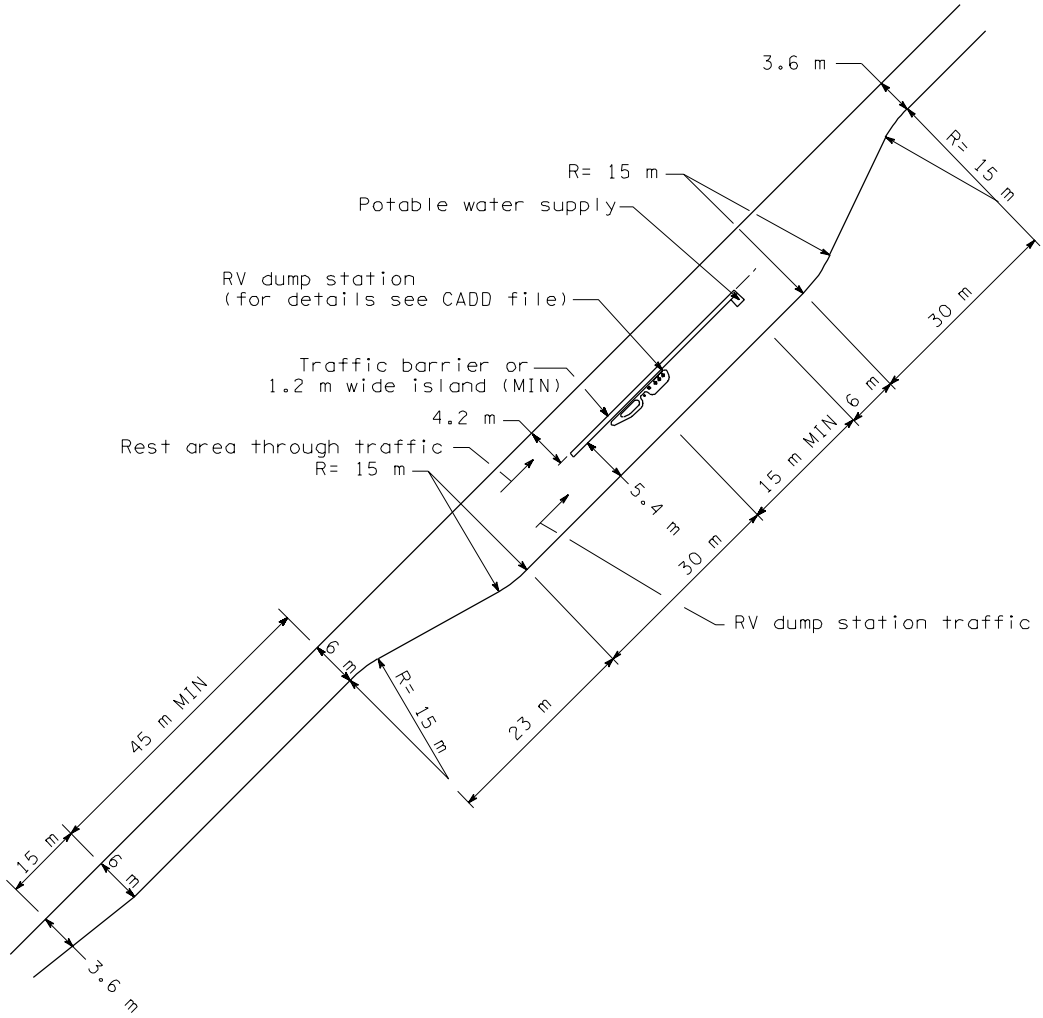

Typical Single RV Dump Station Layout
Figure 1030-2

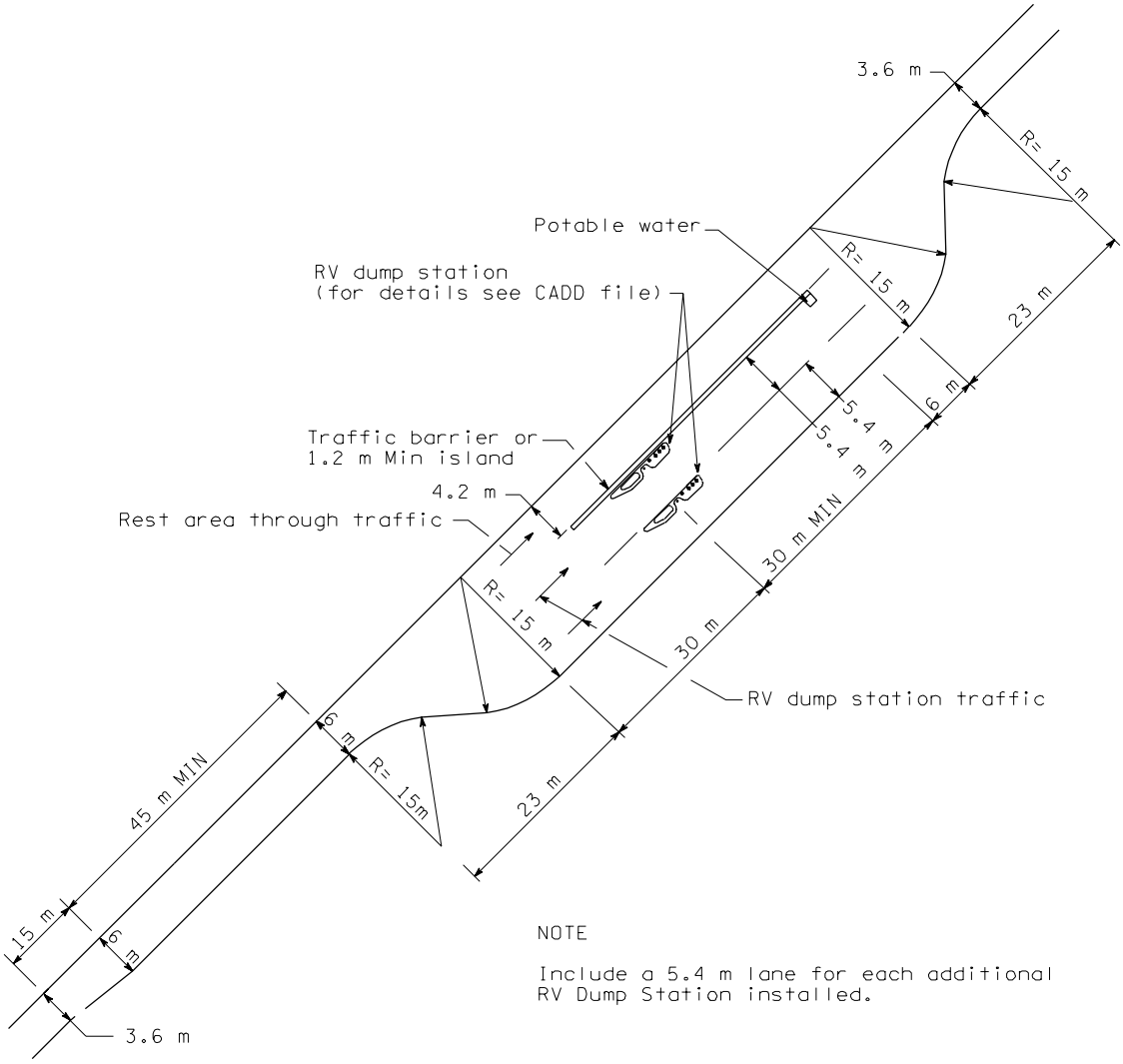

Typical Two RV Dump Station Layout
Figure 1030-3

(c) **Section**

- Show cross sections of the waterway. The extent will be determined by the OSC Hydraulics Branch.

The requirements for waterway profile and cross sections may be less stringent if the Hydraulics Branch has sufficient documentation (FEMA reports, for example) to make a determination. Contact the Hydraulics Branch to verify the extent of the information needed. Coordinate any rechannelization of the waterway with the Hydraulics Branch.

Many waterway crossings require a permit from the U.S. Coast Guard. (See Chapter 240.) Generally, ocean tide influenced waterways and waterways used for commercial navigation require a Coast Guard permit. These structures require the following additional information:

- Names and addresses of the landowners adjacent to the bridge site.
- Quantity of new embankment material within the floodway. This quantity denotes, in cubic meters, the material below normal high water and the material above normal high water.

Some waterways may qualify for an exemption from Coast Guard permit requirements if certain conditions are met. See the *Bridge Design Manual*. If the waterway crossing appears to satisfy these conditions, then submit a statement explaining why this project is exempt from a Coast Guard permit. Attach this exemption statement to the Environmental Classification Summary prepared for the project and submit it to the OSC Project Development Branch for processing to FHWA.

The region is responsible for coordination with the Bridge and Structures Office, U. S. Army Corps of Engineers, and U. S. Coast Guard for waterways that may qualify for a permit exemption. The Bridge and Structures Office is responsible for coordination with the U.S. Coast Guard for waterways that require a permit.

1110.05 Additional Data for Grade Separations

(1) Highway-Railroad Separation

Supplement bridge site data for structures involving railroads with the following:

(a) **Plan**

- Alignment of all existing and proposed railroad tracks.
- Center-to-center spacing of all tracks.
- Angle, station, and coordinates of all intersections between the highway alignment and each track.
- Location of railroad right of way lines.
- Horizontal curve data. Include coordinates for all circular and spiral curve control points.

(b) **Profile**

- For proposed railroad tracks; profile, vertical curve, and superelevation data for each track.
- For existing railroad tracks, elevations accurate to 3 mm taken at intervals of 2.5 to 3 m along the top of the highest rail of each track. Provide elevations to 15 m beyond the extreme outside limits of the existing or proposed structure. Tabulate elevations in a format acceptable to the Bridge and Structures Office.

(2) Highway-Highway Separation

Supplement bridge site data for structures involving other highways by the following:

(a) **Plan**

- Alignment of all existing and proposed highways, streets, and roads.
- Angle, station, and coordinates of all intersections between all crossing alignments.
- Horizontal curve data. Include coordinates for all curve control points.

(b) **Profile**

- For proposed highways; profile, vertical curve, and superelevation data for each.

- For existing highways; elevations accurate to 3 mm taken at intervals of 2.5 to 3 m along the center line or crown line and each edge of shoulder, for each alignment, to define the existing roadway cross slopes. Provide elevations to 15 m beyond the extreme outside limits of the existing or proposed structure. Tabulate elevations in a format acceptable to the Bridge and Structures Office format.

(c) **Section**

- Roadway sections of each undercrossing roadway indicating the lane and shoulder widths, cross slopes and side slopes, ditch dimensions, and traffic barrier requirements.
- Falsework or construction opening requirements. Specify minimum vertical clearances, lane widths, and shy distances.

1110.06 Additional Data for Widenings

Bridge rehabilitations and modifications that require new substructure are defined as bridge widenings.

Supplement bridge site data for structures involving bridge widenings by the following:

- Submit DOT Form 235-002A, "Supplemental Bridge Site Data-Rehabilitation/ Modification."

(a) **Plan**

- Stations for existing back of pavement seats, expansion joints, and pier center lines based on field measurement along the survey line and each curb line.
- Locations of existing bridge drains. Indicate whether these drains are to remain in use or be plugged.

(b) **Profile**

- Elevations accurate to 3 mm taken at intervals of 2.5 to 3 m along the curb line of the side of the structure being widened. Pair these elevations with corresponding elevations (same station) taken along the crown line or an offset distance (minimum of 3 m from the curb line). This information will be used to establish the cross slope of the existing bridge. Tabulate elevations in a format acceptable to the Bridge and Structures Office.

Take these elevations at the level of the concrete roadway deck. For bridges with latex modified or microsilica modified concrete overlay, elevations at the top of the overlay will be sufficient. For bridges with a nonstructural overlay, such as an asphalt concrete overlay, take elevations at the level of the concrete roadway deck. For skewed bridges, take elevations along the crown line or at an offset distance (3 m minimum from the curb line) on the approach roadway for a sufficient distance to enable a cross slope to be established for the skewed corners of the bridge.

1110.07 Documentation

The following documents are to be preserved in the project file. See Chapter 330.

- ☐ DOT Form 235-002, "Bridge Site Data - General"
- ☐ DOT Form 235-001, Bridge Site Data for Stream Crossings"
- ☐ DOT Form 235-002A, "Supplemental Bridge Site Data - Rehabilitation/ Modification"
- ☐ United States Coast Guard permit
- ☐ Environmental Classification Summary

P65:DP/DM11

Review Chapter 1110 of the *Design Manual* for further information and description of the items listed below.

PLAN (In CAD file.)

_____ Survey Lines and Station Ticks
_____ Survey Line Intersection Angles
_____ Survey Line Intersection Stations
_____ Survey Line Bearings
_____ Roadway and Median Widths
_____ Lane and Shoulder Widths
_____ Sidewalk Width
_____ Connection/Widening for Traffic Barrier
_____ Profile Grade and Pivot Point
_____ Roadway Superelevation Rate (if constant)
_____ Lane Taper and Channelization Data
_____ Traffic Arrows
_____ Mileage to Towns Along Main Line
_____ Existing Drainage Structures
_____ Existing Utilities — Type/Size/Location
_____ New Utilities — Type/Size/Location
_____ Light standards, Junction boxes, Conduits
_____ Bridge Mounted Signs and Supports
_____ Contours
_____ Bottom of Ditches
_____ Test Holes (if available)
_____ Riprap Limits
_____ Stream Flow Arrow
_____ R/W Lines and/or Easement Lines
_____ Exist. Bridge No. (to be removed, widened)
_____ Section, Township, Range
_____ City or Town
_____ North Arrow
_____ SR Number
_____ Scale

TABLES (In tabular format in CAD file.)

_____ Curb Line Elevations. at Top of Exist. Br. Deck
_____ Undercrossing Roadway Existing Elevations
_____ Undercrossing Railroad Existing Elevations
_____ Curve Data

OTHER SITE DATA (May be in CAD or may be on supplemental sheets or drawings.)

_____ Superelevation Diagrams
_____ End Slope Rate
_____ Profile Grade Vertical Curves
_____ Coast Guard Permit Status
_____ Railroad Agreement Status
_____ Highway Classification
_____ Design Speed
_____ ADT, DHV, and % T

FORMS (Information noted on the form or attached on supplemental sheets or drawings.)

Bridge Site Data General

_____ Slope Protection
_____ Pedestrian Barrier/Pedestrian Rail Height Requirements
_____ Construction/Falsework Openings
_____ Stage Construction Channelization Plans
_____ Bridge (before/with/after) Approach Fills
_____ Datum
_____ Video of Site
_____ Photographs of Site
_____ Control Section
_____ Project Number
_____ Region Number
_____ Highway Section

Bridge Site Data for Stream Crossings

_____ Water Surface Elevations and Flow Data
_____ Riprap Cross Section Detail

Supplemental Bridge Site Data-Rehabilitation/Modification

BRIDGE, CROSSROAD, AND APPROACH ROADWAY CROSS SECTIONS (May be in CAD or separate drawings.)

_____ Bridge Roadway Width
_____ Lane and Shoulder Widths
_____ Profile Grade and Pivot Point
_____ Superelevation Rate
_____ Survey Line
_____ PB/Pedestrian Rail Dimensions
_____ Stage Construction Lane Orientations
_____ Locations of Temporary Barrier
_____ Conduits/Utilities in Bridge
_____ Location and Depth of Ditches
_____ Shoulder Widening for Barrier
_____ Side Slope Rate

Bridge Site Data Check List

Figure 1110-1

1130 Retaining Walls and Steep Reinforced Slopes

1130.01 References
1130.02 General
1130.03 Design Principles
1130.04 Design Requirements
1130.05 Guidelines for Wall/Slope Selection
1130.06 Design Responsibility and Process
1130.07 Documentation

113.01 References

Bridge Design Manual, M 23-50, WSDOT

Standard Plans for Road, Bridge, and Municipal Construction (Standard Plans), M 21-01, WSDOT

Plans Preparation Manual, M 22-31, WSDOT

Roadside Manual, M 25-39, WSDOT

1130.02 General

The function of a retaining wall is to form a nearly vertical face through confinement and/or strengthening of a mass of earth or other bulk material. Likewise, the function of a reinforced slope is to strengthen the mass of earth or other bulk material such that a steep (up to 2V:1H) slope can be formed. In both cases, the purpose of constructing such structures is to make maximum use of limited right of way. The difference between the two is that a wall uses a structural facing whereas a steep reinforced slope does not require a structural facing. Reinforced slopes typically use a permanent erosion control matting with low vegetation as a slope cover to prevent erosion. See the *Roadside Manual* for more information.

To lay out and design a retaining wall or reinforced slope, consider the following items:

- Functional classification
- Highway geometry
- Design Clear Zone requirements (Chapter 700)
- The amount of excavation required
- Traffic characteristics
- Constructibility
- Impact to any adjacent environmentally sensitive areas
- Impact to adjacent structures
- Potential added lanes
- Length and height of wall
- Material to be retained
- Foundation support and potential for differential settlement
- Ground water
- Earthquake loads
- Right of way costs
- Need for construction easements
- Risk
- Overall cost
- Visual appearance

If the wall or toe of a reinforced slope is to be located adjacent to the right of way line, consider the space needed in front of the wall/slope to construct it.

(1) Retaining Wall Classifications

Retaining walls are generally classified as gravity, semigravity, nongravity cantilever, or anchored. Examples of the various types of walls are provided in Figures 1130-1a through 1c.

Gravity walls derive their capacity to resist lateral soil loads through a combination of dead weight and sliding resistance. Gravity walls can be further subdivided into rigid gravity walls, prefabricated modular gravity walls, and Mechanically Stabilized Earth (MSE) gravity walls.

Rigid gravity walls consist of a solid mass of concrete or mortared rubble and use the weight of the wall itself to resist lateral loads.

Once the detailed wall plans and designs are available as shop drawings after contract award, the Bridge and Structures Office will review and approve the wall shop drawings and calculations, with the exception of geosynthetic walls which are reviewed and approved by the Geotechnical Services Branch.

(c) Nonpreapproved Proprietary Walls. Final design approval authority for nonpreapproved proprietary walls is the same as for preapproved proprietary walls. The region initiates the design effort for all nonpreapproved wall systems by submitting wall plan, profile, cross-section, and other information for the proposed wall to the Bridge and Structures Office, with copies to the Geotechnical Services Branch and the Principal Architect. The Bridge and Structures Office coordinates the wall design effort.

Once the geotechnical and architectural assessments have been completed and the desired wall types selected, the Bridge and Structures Office contacts suppliers of the nonpreapproved wall systems selected to obtain and review detailed wall designs and plans to be included in the contract PS&E.

To ensure fair competition between all wall alternatives included in the PS&E, the wall face quantities for those wall systems subject to the same face embedment requirements should be identical.

The Bridge and Structures Office develops the special provisions and cost estimates for the nonpreapproved proprietary walls and sends the wall PS&E to the region for inclusion in the final PS&E in accordance with the *Plans Preparation Manual*.

(d) Nonstandard Nonproprietary Walls. With the exception of rockeries over 1.5 m high, nonproprietary geosynthetic walls and reinforced slopes, and soil nail walls, the Bridge and Structures Office coordinates with the Geotechnical Services Branch and the Principal Architect to carry out the design of all nonstandard, nonproprietary walls. In this case, the Bridge and Structures Office develops the wall preliminary plan from site data provided by the region, completes the wall design, and develops the nonstandard nonproprietary wall PS&E package for inclusion in the contract.

For rockeries over 1.5 m high, nonproprietary geosynthetic walls and reinforced slopes, and soil nail walls, the region develops wall/slope profiles, plans, and cross-sections and submits them to the Geotechnical Services Branch to complete a detailed wall/slope design.

For geosynthetic walls and slopes, and for rockeries, the region provides overall coordination of the wall/slope design effort, including coordination with the Principal Architect regarding aesthetics and finishes, and the Region or OSC Landscape Architect if the wall uses vegetation on the face. The Geotechnical Services Branch has overall design approval authority. Once the wall design has been completed, the Geotechnical Services Branch, and in some cases the Bridge and Structures Office, provides geotechnical and structural plan details to be included in the region plan sheets and special provisions for the PS&E. The region then completes the PS&E package.

For soil nail walls, once the Geotechnical Services Branch has performed the geotechnical design, the Bridge and Structures Office, in cooperation with the Geotechnical Services Branch, coordinates the design effort and completes the PS&E package.

(3) Guidelines for Wall/Slope Data Submission for Design

(a) Standard Walls, Proprietary Walls, Geosynthetic Walls/Slopes, and Soil Nail Walls. Where OSC involvement in retaining wall/slope design is required (as for standard walls and preapproved proprietary walls over 3 m in height, gabions over 2 m in height, rockeries over 1.5 m in height, all nonpreapproved proprietary walls, geosynthetic walls/slopes, and all soil nail walls), the region submits the following information to the Geotechnical Services Branch or Bridge and Structures Office as appropriate:

- Wall/slope plans.
- Profiles showing the existing and final grades in front of and behind the wall.

Index

A

Abbreviations, 110-1
Acceleration lane, 910-6, 910-29, 940-6, 940-16
Access:
- approach criteria, 1420-3, 1420-5
- commercial approaches, 1420-5, 1420-6
- control development, 1430-1
- crossroads at interchange ramps, 1420-1
- design policy, 1420-1
- frontage roads, 1420-7
- full control, 1420-1
- general requirements, 1430-1
- hearing, 210-12, 1430-2
- hearing plan, 1430-2
- illumination, 840-1
- location of utilities, 1410-4, 1420-2, 1420-4, 1420-5, 1420-7
- modified control, 1420-4
- partial control, 1420-2
- pedestrian facilities, 1020-8
- programming for funds, 1410-4
- public transportation facilities, 1060-1
- railroad approaches, 1420-6
- report, 1430-1
- report plan, 1430-1
- road approaches, 1410-1

Access Point Decision Report, 1425-1
- access point decision report and supporting analyses, 1425-1
- report and supporting analysis, 1425-4

Administrative appeal hearing, 210-15
Aesthetics for retaining walls, 1130-4
Aesthetic/visual elements, 330-2, 330-4, 330-6
Agreements, 240-10, 1420-7
Air space, 1420-7
Airport system plan, 120-3
Airport-highway clearance, 240-13, 630-3
Alignment:
- horizontal, 620-1
- vertical, 630-1

Alignment monuments, 1450-2
Application for permit to remove or destroy a survey monument, 1450-5
Approaches:
- commercial, 920-3
- full access control, 1420-1
- noncommercial, 920-3
- partial access control, 1420-2
- railroad, 1420-6, 1420-7
- right of way considerations, 1410-1
- road, 920-1, 1410-1, 1420-8

Approach rails to bridges, 710-13
Approval:
- access report, 1430-1
- environmental, 220-8, 220-10
- governmental agencies, 240-1
- hearing plans, 1430-2
- interchange plans, 940-10
- materials source, 510-1, 510-16

Archaeological sites, 220-5
Army Corps of Engineers (COE), 240-1
Arterial HOV, 1050-10
Arterial HOV, definition, 1050-1
Arterial programs, 120-1
Asphalt concrete pavement, 520-3, 520-4
Attenuators, impact, 720-1
Authorized road approach, 920-1
Auxiliary lane, 1010-1
- added to basic, 620-4
- chain-up area, 1010-5
- climbing lanes, 1010-2
- emergency escape ramps, 1010-4
- interchanges, 940-6
- left turn, 910-4
- passing lanes, 1010-2
- railroad grade crossings, 930-2
- right turn, 910-6
- shoulder driving for slow vehicles, 1010-3
- slow moving vehicle turnouts, 1010-3
- speed change lanes, 910-6
- two-way left turn, 910-5

Average weekday vehicle trip ends, 920-1

B

Barrier delineation, 830-4
Barriers, traffic, 710-1
    beam guardrail, 710-4
    bridge rails, 710-13
    cable barrier, 710-10
    concrete barrier, 710-10
    design, 710-3
    dragnet, 710-14
    flare rate, 710-4
    length of need, 710-4, 710-16, 710-17
    longitudinal barrier deflection, 710-3
    other barriers, 710-14
    project requirements, 710-1
    redirectional land forms, 710-13
    shy distance, 710-3
    water filled barrier, 710-14
Base and surfacing typical section, 520-6
Basic design level, 410-1
    minor safety and minor preservation work, 410-1
    required safety items of work, 410-1
Beam guardrail (see Guardrail)
Bicycle facilities, 1020-1, 1060-4, 1120-4
Borrow sites: see sundry sites
Boundaries, international, 1410-2
Bridges, 1120-1
    approach slab, 1120-3
    end slopes, 640-9
    geotechnical investigation, 510-11
    horizontal clearance, 1120-2
    location, 1120-1
    medians, 1120-2
    pedestrian and bicycle facilities, 1120-3
    permits, 240-1
    protective screening for highway structures, 1120-3
    rail end treatment, 1120-3
    rails, 710-13
    site design, 1120-1
    slope protection, 1120-3
    structural capacity, 1120-1
    vertical clearance, 1120-2
    width for structures, 1120-2
Bridge rails, 710-13
    concrete safety shapes, 710-11
    end treatment, 1120-3
    thrie beam retrofit, 710-14, 710-21
    type 7 upgrade criteria, 710-2
Bridge site data, 1110-1
    checklist, 1110-5
Bridge width for structures, 1120-2
Buffer-separated HOV facility, definition, 1050-1
Bus berth design, 1060-14
Bus stop pullouts, arterial streets, 1060-19
Bus stops and pullouts, 1060-7
    bus pullouts, 1060-9
    designation and location, 1060-7
    farside bus stops, 1060-8
    introduction, 1060-7
    mid-block bus stops, 1060-9
    near side bus stops, 1060-8
    placement, 1060-8
    turnout transfer center, 1060-16

C

Cable barrier, 710-10
Cantilever sign supports, 820-3
Capacity, highway, 610-1
Categorical Exclusion (CE), Programmatical - Class II - NEPA, 220-9
Categorical Exclusion (CE), Documental - Class II - NEPA, 220-9
Categorical Exemption (CE), Class II - SEPA, 220-10
Cattle passes, 1410-1
Chain-off areas, 1010-5
Chain-up areas, 1010-5
Channel changes, 1210-2
Channelization, 910-4
    curbing, 910-6
    island, 910-7
    left-turn lanes, 910-4
    median, 910-22, 910-23
    right-turn lanes, 910-6
    speed change lanes, 910-6
    widening, 910-21
City street connections, 1420-7
Classification:
    cross section design data, 640-1
    functional, 120-4, 440-1
    geometric design data, 440-2
    project, 220-2
    state highway route systems, 120-4
    terrain, 440-1
Clearance:
    airport-highway, 240-4, 630-3
    bridge, 1120-1

Clear zone, 330-3, 700-1
distance tables, 700-12
ditch sections, 700-12
values, 700-2
Climbing lanes, 1010-2
level of service, 1010-2
speed reduction, 1010-2
Closed circuit television cameras, 860-1
Cloverleaf interchange, 940-2
Coast Guard permits, 240-3
Collector distributor roads, 940-8
Collector system, 440-1
Combined hearings, 210-15
Commercial approaches, 920-3
Commitment file, 220-1, 220-12
Concrete barrier, 710-10
shapes, 710-11
terminals, 710-12
Concurrent flow lane, definition, 1050-1
Concurrent flow lanes, typical, 1050-11, 1050-24
Conflict, 910-1
Conforming road approach, 920-1
Connections:
county road and city street, 1420-7
interchange, 940-6
Contract preparation, 850-10
Contraflow lane, definition, 1050-1
Control monuments, 1450-2
Construction identification signs, 820-1
Construction Work Zone Traffic Control Strategy, 810-1
Construction Zone Guard Rail Energy Absorption Terminal (GREATcz), 720-2, 720-9
Consultants, geotechnical, 510-14
Contour grading, 1310-1
general, 1310-1
procedures, 1310-1
recommendations, 1310-1
references, 1310-1
Coordination:
public agencies, 240-1
Corridor hearing, 210-11
Corner radii, 910-2
County road connections, 1420-7
Critical slope, 700-1
Crossings:
bicycle facilities, 1020-3
pedestrian, 1020-3
railroad grade, 930-1
ramp intersections, 940-6
waterway, 1110-2
Crossroad, 910-1, 910-2
Cross sections:
encroachment (RR), 930-3
geometric, 640-1
interchanges, 940-3
roadway, 640-2
Cross slope, 430-2, 640-2, 640-4
Crosswalks, 1020-9
Cul-de-sac, 1420-7
Curb cut ramps, 1020-9
Curbing, 910-6
Curves:
horizontal, 620-2
superelevation, 640-4
vertical, 630-2

D

Data for all structures, 1110-1
Data for grade separations structures, 1110-3
Data for waterway crossings structures, 1110-2
Data for widening of structures, 1110-4
Datums for surveying, 1440-2
Deceleration lane, 910-6, 910-28, 940-7, 940-21
Deep-seated instability, 1350-2
Delineation, 830-1
barrier delineation, 830-4
guideposts, 830-3
pavement marking, 830-1
procedure, 830-4
raised pavement markers, 830-2
spacing of wildlife reflectors, 830-5
wildlife warning reflectors, 830-4
Department of Ecology, 240-6
Depts. of Fisheries and Game, 240-6
Department of Natural Resources, 240-8
Design:
guides for highway capacity, 610-1
hearing, 210-12
items, 160-1
manual description, 100-1
manual revisions, 100-1
principles, 160-1
speed, 440-3, 940-4
speed ramp, 940-4
standards, 160-1, 430-3
traffic barriers, 710-3
vehicle, 430-3, 910-3
vehicle turning movements, 1060-23

Design approach for geosynthetics, 530-3
ditch lining, 530-6
permanent erosion control, moderate and high survivability, 530-5
separation, 530-4
site-specific designs (all applications), 530-10
soil stabilization, 530-5
standard specification geotextile application identification in the plans, 530-9
temporary silt fence, 530-6
underground drainage, low and moderate survivability, 530-3
Design approval level, 330-6
Design clear zone for ditch sections, 700-1
Design components of signs, 820-2
cantilever sign structures, 820-3
foundations, 820-3
lateral clearance, 820-2
location, 820-2
longitudinal placement, 820-2
sign heights, 820-2
sign posts, 820-3
truss-type sign bridges, 820-3
Design considerations of intersections at grade, 910-2
crossroads, 910-2
intersection configurations, 910-2
traffic analysis, 910-2
Design criteria of HOV facilities, 1050-7
adding an HOV lane, 1050-7
barrier-separated HOV facilities, 1050-7
concurrent flow HOV lanes, 1050-7
design considerations, 1050-7
design procedures, 1050-7
direct access connections, 1050-8
enforcement areas, 1050-9
lane termination, 1050-8
ramp bypass, 1050-8
signs and pavement markings, 1050-9
Design documentation, 330-3
design documents, 330-3
design variance inventory, 330-4
FHWA requirements, 330-3
Design documentation, approval, and process review, 330-1
design approval, 330-4
design documentation, 330-3
process review for region approved projects, 330-4
project definition phase, 330-2
project development, 330-2
purpose, 330-1
Design exception, 325-5
Design hearing, 210-12
Design Matrix 1, Interstate Routes (Main Line), 325-11
Design Matrix 2, Interstate Interchange Areas, 325-12
Design Matrix 3, NHS Routes (Main Line), 325-13
Design Matrix 4, Non-Interstate Interchange Areas, 325-14
Design Matrix 4, Non-NHS Routes, 325-15
Design matrix procedures, 325-1
design elements, 720-2
design matrix procedures, 325-3
design matrix selection guide, 325-4
project type, 325-4, 325-2
selecting a design matrix, 325-3
terminology, 325-1
using a design matrix, 325-4
Design of noise barriers, 1140-1
Design of pavement structure, 520-1
asphalt concrete pavement and asphalt distribution tables, 520-3, 520-4
base and surfacing typical section, 520-6 to 520-14
estimating bituminous surface treatment, 520-5
estimating tables, 520-1
introduction, 520-1
Design recommendations for roadside development, 1300-3
Design responsibility and process for retaining walls, 1130-8
guidelines for wall/slope data submission for design, 1130-12
nonpreapproved proprietary walls, 1130-12
nonstandard nonproprietary walls, 1130-12
preapproved proprietary walls, 1130-10
responsibility and process for design, 1130-8
standard walls, 1130-10

Design requirements of retaining walls and steep reinforced slopes, 1130-2
aesthetics, 1130-4
constructibility, 1130-4
coordination with other design elements, 1130-4
drainage design, 1130-3
geotechnical and structural design, 1130-3
investigation of soils, 1130-3
wall/slope geometry, 1130-2
Design requirements for roadside development, 1300-2
Design reviews and appovals, 330-8
Design vehicle for intersection at grade, 910-3
Designation of highway routes, 120-4
Deviation, 325-5
Diamond interchange, 940-3
Direct access, HOV Direct Access Design Guide, Draft, M 22-98
Direct access ramp, definition, 1050-1
Directional interchange, 940-3
Disabled accessibility, transit, 1060-12
accessibility of bus stops and shelters, 1060-13
introduction, 1060-12
park and ride lots, 1060-12
Discipline report, 220-1
Distributor facilities, 620-2
Ditch inslopes, 430-3
Ditch sections, 700-2
Documentation:
environmental, 220-1
intersections at grade, 910-12
noise barriers, 1140-3
Drainage:
park and ride lot, 1060-5
retaining walls, 1130-3
roadway, 1210-2
Drainage ditches in embankment areas, 640-9
Driveways: see road approaches
Dynamic message signs, 860-4

E

Earth berms:
noise barriers, 1140-2
redirectional, 710-13
Easements, 1410-2
Ecology, Department of, 240-6
Eight-phase job plan for VE studies, 315-5
Embankment barrier, 700-3
Emergency escape ramps, 1010-3
Encroachment, railroad, 930-3
Enforcement area (one direction only), 1050-21, 1050-34
Enforcement area, definition, 1050-1
Enforcement area, median, 1050-22, 1050-35
Enforcement observation point, definition, 1050-1
Environmental Assessment (EA), NEPA - Class III, 220-10
Environmental documents
Class I - NEPA (EIS) Environmental Impact Statement, 220-3
Class I - SEPA (EIS) Environmental Impact Statement, 220-3
Class II - NEPA (EIS) Environmental Impact Statement, 220-9
Class II - NEPA (EIS) Environmental Impact Statement, 220-9
Class II - SEPA (EIS) Categorical Exemption, 220-10
Class III - NEPA (EIS) Environmental Assessment, 220-10
geotechnical report, 510-5
SEPA; Checklist, 220-10
Environmental hearings, 210-11
Environmental Protection Agency (EPA), 240-5
Equestrian facilities, 1020-10
Erosion control, 1350-2
Escape ramps, 1010-4
Estimating bituminous surface treatment, 520-5 to 520-14
Evaluate upgrade, 325-5
Evaluate Upgrade (EU), Sample, 330-13

F

Farmlands, 220-5
Federal aid:
financing, 140-1, 1410-3
systems, 120-4
Federal agencies, 240-1, 1410-4
Federal Aviation Administration (FAA), 240-4
Federal Energy Regulatory Commission (FERC), 240-5
Fencing, 1460-1
chain link fencing, 1460-2
design criteria, 1460-1

documentation, 1460-3
fence types, 1460-2
gates, 1460-3
limited access highway, 1460-1
managed access highways, 1460-2
procedures, 1460-3
references, 1460-1
wire fencing, 1460-2
Ferry system plan, 120-3
Filing requirements of monuments, 1450-3
Fill slopes, 430-3
Finding of no significant impact, 220-2, 220-11
Findings and order plan, 220-13, 1410-4, 1430-2
Fisheries, Department of, 240-6
Flexible pavement design, 520-2, 520-3
Flood plains, 220-5
Flyover ramp, definition, 1050-1
Fog seal, 520-5
Forest Service (USFS), 240-3
Formal hearings, 210-4
Frontage roads, 620-3, 1420-7
Full access control, design policy, 1420-1
Full design level, 440-1
city streets and county roads, 440-3
design speed, 440-3
functional classification, 440-2
geometric design data, 440-3
grades, 440-6
medians, 440-5
parking, 440-6
pavement type, 440-6
shoulders, 440-4
structure width, 440-6
state highway system, 440-3
state highways as city streets, 440-3
terrain classification, 440-3
traffic lanes, 440-4
Functional classification, 120-4, 440-2
Funds, programming for:
access control, 1410-4
federal aid programs, 140-1
right of way, 1410-4

G

Gabion walls, 1130-9
Gates, 1460-2
Geocomposites, 530-2
Geographic information system, 1440-3
Geogrids, 530-2
Geomembranes, 530-2
Geometric cross section, 640-1
documentaiton, 640-9
medians and outer separations, 640-6
roadsides, 640-7
roadways, 640-2
superelevation, 640-4
Geometric plan elements, 620-1
alignment examples, 620-6 to 620-8
arrangement of lanes, 620-3
auxiliary lanes, 620-4
distribution facilities, 620-2
frontage roads, 620-3
horizontal alignment, 620-1
horizontal curve radii, 620-2
lane transitions, 620-4
median width transitions, 620-4
number of lanes and arrangement, 620-3
procedures, 620-4
Geometric profile elements, 630-1
alignment of structures, 630-2
airport clearance, 630-3
coordinating of vertical and horizontal alignments, 630-2, 630-6 to 630-8
design control, 630-1
grade lengths, 630-2
grading at railroad crossings, 630-3
length of grade, 630-2
maximum grades, 630-2
minimum grades, 630-2
minimum length of vertical curves, 630-2
procedures, 630-3
railroad crossings, 630-3
vertical alignment, 630-1
Geometrics:
design data, 440-3
horizontal alignment, 620-1
plan elements, 620-1
profile elements, 630-1
vertical alignment, 630-1
Geonets, 530-2
Geosynthetics, 530-1
application examples, 530-16 to 530-19
applications, 530-2
class, selection criteria, 530-3
design approach, 530-3
design process for drainage and erosion control, 530-4

design process for separation, soil stabilization, and silt fence, 530-13
design responsibility, 530-11
ditch lining, 530-6
ditch and swale length and width, 530-21
ditch and swale maximum contributing areas, 530-8
examples, 530-14, 530-15
function definitions, 530-2
permanent erosion control, 530-5
separation, 530-4
silt fence, contributing area, 530-22
silt fence, end treatment, 530-23
silt fence, gravel check dams, 530-24
silt fence, length, 530-8
silt specification design, 530-10
slope length, 530-20
soil stabilization, 530-5
standard specifications, 530-9
temporary silt fence, 530-6
types and characteristics, 530-1
underground drainage, 530-3
Geotechnical investigation, design, and reporting, 510-2
bridge foundations, 510-11
buildings, 510-7
communication towers, 510-7
design objectives, 510-3
earthwork, 510-4
environmental mitigation, 510-5
ferries projects, 510-13
hydraulic structures, 510-5
key contacts, 510-2
luminaire foundations, 510-7
noise walls, 510-8
overview, 510-3
park and ride lots, 510-7
reinforced slopes, 510-8
rest areas, 510-7
retaining walls, 510-8
rockslope, 510-10
scheduling considerations, 510-2
signals, 510-7
signs, 510-7
site data and permits, 510-3
slopes, 510-9
Glare screen, 700-7
Global positioning system, 1440-2
Grade approvals, cities and towns, 240-9
Grade crossings, railroad, 930-1
Grade intersections, 910-1
Grade separation:
highway, 1110-3
pedestrian, 1020-10
railroad, 1110-3
Grades:
bicycle facilities, 1020-3, 1020-5
highway, 440-2
pedestrian facilities, 1020-10
vertical alignment, 630-2
Grading, contour, 1310-1
Gravity walls, 1130-2
Guardrail:
beam, 710-4
connections, 710-8
locations on slopes, 710-5
old type 3 anchors, 710-7
placement cases, 710-8
post installation, 710-18
terminals and anchors, 710-5, 710-19
transitions and connections, 710-7, 710-9
Guidelines for wall/slope selection, 1130-5
cost considerations, 1130-7
cut and fill considerations, 1130-5
facing options, 1130-7
feasible wall and slope hieghts and applications, 1130-6
settlement and deep foundation support considerations, 1130-6
summary, 1130-8
supporting structures or utilities, 1130-6
Guide posts, 830-1, 830-3
placement and spacing, 830-3
requirements, 830-3
Guide sign plan, 820-4

H

Handicapped, facilities for, 1020-9, 1060-4
Hazard, 700-1
Hearing summary, 210-11
Hearings, 210-6
access, 210-12, 1430-2
administrative appeal, 210-15
combined, 210-15
coridor, 210-11
design, 210-12
environmental, 210-11, 220-7, 220-12

formal, 210-4
notice, 210-7
preparation, 210-8
requirements, 210-6
informal, 210-4
High occupancy vehicle (HOV) facility, 1050-1
arterial HOV, 1050-10
design criteria, 1050-7
HOV operations, 1050-5
preliminary design and planning, 1050-2
Highway:
airport clearance, 240-4
capacity, 610-1
classification, 440-1
functional classification, 120-4, 440-1
monumentation, 1450-1
numbering system, 120-4
System Plan, 120-2
Highway advisory radio, 860-4
Highway Capital Improvement Program, 325-9, 325-10
Highway Capital Preservation Program, 325-8
Highway-highway separation, 1110-3
Highway Performance Monitoring System (HPMS), 130-1
Highway-railroad separation, 1110-3
Historical marker, 1030-1
Horizontal alignment, 620-1
Horizontal clearance in bridge design, 1120-2
HOV flyover, typical, 1050-17, 1050-30
HOV:
design criteria, 1050-7
direct access, HOV Direct Access Design Guide, Draft, M 22-98
enforcement, 1050-6
hours of operations, 1050-6
operations, 1050-5
SC&DI, 1050-6
vehicle occupancy designation, 1050-5
Hydraulic considerations, 1210-1
challen changes, 1210-2
roadway drainage, 1210-2
stream crossings, 1210-2
subsurface discharge of highway drainage, 1210-3
subsurface drainage, 1210-3
the flood plain, 1210-1
treatment of runoff, 1210-3
Hydraulic design, 1210-1
design responsibility, 1210-3
geotechnical investigation, 510-5
hydraulic consideraitons, 1210-1
safety considerations, 1210-3

I

Illumination, 840-1, 1060-5
approval, 840-1
design report, 840-3
warrants, 840-2
Impact attenuator systems, 720-1 to 12
comparison, 720-12
design criteria, 720-3
documentation, 720-5
older systems, 720-10, 720-11
permanent installations, 720-1, 720-6, 720-7, 720-8
selection, 720-4
sizes, 720-4
truck mounted, 720-3
work zone installations, 720-2, 720-9
Impact Statement, Environmental (EIS) - Class I - NEPA, 220-3
Impact Statement, Environmental (EIS) - Class I - SEPA, 220-3
Intelligent transportation systems (ITS), 860-1
closed circuit television cameras, 860-1
motorist information, 860-4
National ITS Architecture, 860-1
surveillance, control, and driver information (SC&DI), 860-1
traffic data collection, 860-2
traffic flow control, 860-3
traffic operations center (TOC), 860-2
Traffic Systems Management Center (TSMC), 860-2
Venture Washington, 860-1
Interchange, 940-1
definitions, 940-1
documentation, 940-10
collector distributor roads, 940-8
connections, 940-6
design, 940-2
on two-lane highways, 940-9
patterns, 940-2
plans, 940-10
ramps, 940-4

ramp design speed, 940-4
ramp grade, maximum, 940-5
ramp widths, 940-5
ramp terminal intersections at crossroads, 940-9
references, 940-1
spacing, 940-3
Interdisciplinary team (IDT), 220-3
International boundaries, 1410-1
Intersection at grade, 430-3, 910-1, 920-1
channelization, 910-4
design considerations, 910-2
design vehicle, 430-3
four leg intersection, 910-1
interchange ramp terminals, 910-11
intersection leg, 910-1
island, 910-2
procedures, 910-11
right-turn corners, 910-4
roundabouts, 910-2, 910-8
sight distance, 910-9
tee (T) intersection, 910-1
traffic control, 910-10
u-turns, 910-9
wye (W) intersection, 910-1
Intersection design, transit, 1060-11, 1060-25, 1060-26
Intersection radii, transit, 1060-11
Interstate highway system, 120-4, 440-1
Investigation of soils, rock, and surfacing materials, 510-1
geotechnical investigation, design, and reporting, 510-2
geotechnical work by others, 510-14
materials sources, 510-1, 510-16
surfacing report, 510-14
use of geotechnical consultants, 510-14
Irrigation, 1330-1
design considerations, 1330-1
general, 1330-1
references, 1330-1
Islands, traffic, 910-2, 910-7
compound right-turn lane, 910-8
location, 910-8
size and shape, 910-7

J

Joint use approach, 920-2

L

Labor and Industries, Department of, 240-9
Landscaping, 1060-5, 1300-2
Land cornner record, 1450-8
Land use transportation plans, 1425-4
Lane:
balance, 620-3, 940-3
capacity volume relationship, 620-3
interchange connections, 940-5
markers, 830-1
number and arrangement, 620-3
reduction, 940-4
transitions, 620-4
Left-turn lanes, 910-4
one-way, 910-4
two-way, 910-5
Left-turn storage guidelines, 910-5
Legislative studies, 310-1
Level of Development Plan, 120-2
Level of service, 610-1
Lighting, 840-1
Limited access: see access
Line enforcement, definition, 1050-2
Longitudinal barriers, 710-1
Longitudinal easements, railroad, 930-3
Low Maintenance Attenuator System (LMA), 720-3, 720-11

M

Mailboxes, 700-4, 1420-5
Mailbox location and turnout design, 700-14
Maintenance site: see sundry sites
Maps: (also see plans)
bridges, 1110-1
survey requirements, 1440-1
Markers, lane, 830-1
Markings, pavement, 830-1
Materials sources, 510-1, 510-16
Mechanically stabilized earth walls, 1130-3
Median, 440-5
barrier warrant, 700-5
bridge, 1120-2
cross sections, 640-6
crossovers, 960-1
transitions, width, 620-4
width, 430-1, 430-4, 440-5

Median crossovers, 910-2, 960-1
analysis, 960-1
approval, 960-2
design, 960-1
Memorandum of agreement, 220-7, 220-9
Memorandum of understanding:
Highways Over National Forest Lands, 240-3
WSDOT-USCG & FHWA, 240-3
WSDOT-WDF & WDW, 240-6
Metropolitan area transportation planning, 120-3
Mileposts, 820-4
Minimum bus zone and pullout after right turn dimensions, 1060-20
Minimum bus zone dimensions, 1060-18
Minor arterial system, 440-2
Minor safety and minor preservation work, 410-1
Modified design, 430-1
cross slope, 430-2
design speed, 430-1
evaluation for stopping sight distance for crest vertical curves, 430-8
evaluation for stopping sight distance for horizontal curves, 430-9
fill slopes and ditch inslopes, 430-3
intersections, 430-3
main line roadway sections, 430-10
minimum total roadway widths for two-lane highway curves, 430-6
minimum total roadway widths for two-lane highway curves, D<90°, 430-7
multilane highways and bridges, 430-4
profile grades, 430-2
ramp lane widths, 430-1
ramp roadway sections, 430-11
stopping sight distance, 430-2
structures, 430-3
two-lane highways and bridges, 430-5
Modified eccentric loader terminal, 710-6
Monitoring, 130-1
Monumentation, 1450-1
alignment monuments, 1450-2
application for permits to remove or destroy a survey monument, 1450-5
control monuments, 1450-2
filing requirements, 1450-3
land corner record, 1450-3, 1450-8
monument documentation summary, 1450-4
other monuments, 1450-3
property corners, 1450-3
record of monuments and accessories, 1450-7
Motorist information, 860-4
additional public information components, 860-4
dynamic message signs, 860-4
highway advisory radio, 860-4
Multiple use of right of way, 1420-7

N

National Highway System (NHS), 325-6, 325-7, 440-2
National ITS Architecture, 860-1
Natural Resources, Department of, 240-8
Navigable waters, 240-3
NEPA, 220-1
New Jersey shape barrier, 710-11
Noise barriers, 1140-1
design, 1140-1
earth berm, 1140-2
noise wall, 1140-2
procedures, 1140-3
standard noise wall types, 1140-3
Noise wall, 1140-2, 1140-4
Nomenclature and references, 110-1
Noncommercial approaches, 920-3
Nonconforming road approach, 920-2
Nonmotorized transportation facilities, 1020-1
Nonrecoverable slope, 700-1
Nonwoven geotextiles, 530-1

O

Observation point, bidirectional, 1050-23, 1050-36
Occupany designation, definition, 1050-2
On and off ramps, 940-4
One-way left-turn geometrics, 910-4
Open house meetings, 210-4
Other roadside safety features, 700-5
headlight glare, 700-6
rumble strips, 700-5
Overhead sign installation, 820-3
horizontal placement, 820-4
illumination, 820-3
monotube cantilever sign supports, 820-3
monotube sign bridges, 820-3
service walkways, 820-4

sign lighting fixtures, 820-3
structure mounted sign mountings, 820-3
vertical clearance, 820-4

P

Park and ride lot, 510-7, 1060-1
access, 1060-3
bicycle, 1060-5
design, 1060-2
drainage, 1060-5
fencing, 1060-6
geotechnical investigation, 510-7
illumination, 1060-5
internal circulation, 1060-3
landscape preservation and development, 1060-6
maintenance, 1060-6
motorcycle facilities, 1060-5
pavement design, 1060-5
pedestrian movement, 1060-4
shelters, 1060-5
site selection, 1060-2
stall size, 1060-4
traffic control, 1060-5
Parking stall size, 1060-3
Partial access control, 1420-2
Partial cloverleaf interchange, 940-3
Passenger amenities, transit, 1060-10
introduction, 1060-10
passenger shelters, 1060-10
Passing lanes, 1010-2
Passing sight distance, 650-1
design criteria, 650-1
horizontal curves, 650-2
no-passing zone markings, 650-2
vertical curves, 650-2
Patented items, 160-1
Paths, 1020-8
Pavement:
markings, 830-1
transit benefit facilities, 1060-10
transitions, 620-4
widening, 620-4
Pavement markers-raised, 830-2
Pavement marking, 830-1
Pavement structure, design, 520-1
Pedestrian facilities, 1020-8, 1060-4, 1120-3
Pedestrian grade separations, 1020-10
Permanent references, 1450-1
Permits:
governmental, 240-1
right of way, 1410-2
traffic signal, 850-3
Permit and easement details, 1410-2
Photogrammetry, 130-2, 1440-2
Pit sites, 1410-1
Planning, 120-1
Plans: see maps
access hearing, 1410-3, 1430-2
access report, 1410-3, 1430-1
bridge preliminary, 1110-1 to 1110-5
Findings and order plan, 1410-3, 1430-2
interchange, for approval, 940-3
international boundaries, 1410-1
intersection, for approval, 910-11
public involvement, 210-2, 220-4
right of way, 1410-1
signing, 820-4
study, 220-4
Plant material selection, 1320-3
Policies:
lane markers, 830-1
pavement structure design, 520-1
signing, 820-1
Pollution control (DOE), 240-7
Preliminary bridge plans, 1110-1 to 1110-5
Preliminary design and planning of HOV facilities, 1050-2
conversation of a general-purpose lane, 1050-4
direct access, 1050-5
facility type, 1050-3
inside versus outside HOV lane, 1050-4
operational alternatives, 1050-3
planning elements for design, 1050-2
queue bypass lanes, 1050-5
transit flyer stops, 1050-5
use of existing shoulder, 1050-4
Preliminary plans of vegetation, 1320-1
Preliminary studies, 310-2
Primary control surveys, 1440-1
Primary state highways, 120-4
Principal arterial system, 440-2
Procedures for intersection at grade, 910-11
approval, 910-11
intersection plans, 910-11
local agency or developer initiated intersections, 910-12

Profile grades, 430-2
Program development, 140-1
Project:
classification, 220-2
direct federal, 240-4
reviews, 220-12
Project Analysis, Sample, 330-11, 330-12
Project definition phase, 330-2
design decision summary (DDS), 330-2
environmental review summary (ERS), 330-2
project definition (PD), 330-2
project summary, 330-2
Project requirements for traffic barriers, 710-1
barrier terminals and transitions, 710-2
basic safety, 710-2
bridge rail, 710-2
standard run of barrier, 710-2
Property corners, 1450-3
Proprietary items, 160-1
Propriety walls, 1130-8
Protective screening for highway structures, 1120-5
PS&E process approvals, 330-10
Public hearing access, 1430-2
Public information components, 860-4
Public involvement and hearings, 210-1
access hearing, 210-12
administrative appeal hearing, 210-15
advertise a hearing or opportunity for a hearing, 210-7
combined hearings, 210-15
corridor hearing, 210-11
design hearing, 210-12
environmental hearing, 210-11
formal hearings, 210-4
hearings, 210-6
hearing notice, 210-7
hearing preparation, 210-8
hearing requirements, 210-6
hearing summary contents, 210-11
informal hearings, 210-4
no hearing interest, 210-8
notification techniques, 210-5
open house meetings, 210-4
public involvement, 210-2
public meetings and open house meetings, 210-4
sequence for a hearing, 210-16
Public involvement plan, 210-3
Public transfer facilities, 1060-1

Q

Quarry site: see sundry sites

R

Rail plan, 120-2
Railroad:
approaches, access control, 1420-6
crossing, 630-3, 930-1
easements, 930-3
encroachments, 330-4, 930-3
grade crossings, 930-1
grade crossing orders, 930-3
longitudinal easements, 930-3
right of way acquisition from, 1410-4
stopping lanes, 930-2
traffic control systems, 930-1
Raised pavement markers, 830-2
Ramp, 940-4
design speed, 940-4
grade, 940-5
lane increases, 940-5, 1050-12, 1050-25
lane widths, 430-1, 940-5
meter, HOV bypass, 1050-8, 1050-15, 1050-16, 1050-28
meters, 940-5
Ramp, curb, 1020-9
Ramps, interchange and crossroads, 940-1
Reconstruction, 440-1
Record of decision, 220-2
Record of monuments and accessories, 1450-3, 1450-7
Recoverable slope, 700-1
Redirectional land forms, 710-13
Reports:
access, 1430-1
access point decision, 1425-1
discipline, 220-5
Request for value engineering study, 315-6
Required data for all structures, 1110-1
CAD files and supplemental drawings, 1110-1
report, 1110-2
video and photographs, 1110-2
Required safety items of work, 410-1
Rest areas, 1030-1
Retaining wall classifications, 1130-1

Retaining wall geotechnical investigation, 510-8
Retaining walls and steep reinforced slopes, 1130-1
design principles, 1130-2
design requirements, 1130-2
design responsibility and process, 1130-8
guidelines for wall/slope selection, 1130-5
summary of wall options, 1130-14
Reviews and approvals, 330-7
Revisions, *Design Manual*, 100-1
Right of way:
acquisition, 1410-4
appraisal, 1410-4
considerations, 1410-1
multiple use, 1420-7
plans, 1410-1
programming for funds, 1410-4
transactions, 1410-4
Right of way considerations, 1410-1
acquisition, 1410-4
appraisal, 1410-4
documentation, 1410-5
easements, 1410-2
general, 1400-1
permits, 1410-2
programming for funds, 1410-4
references, 1410-1
special features, 1410-2
transactions, 1410-4
Right of way special features, 1410-2
cattle passes, 1410-2
international boundaries, 1410-2
pits sites, 1410-2
road approaches, 1410-2
stockpile sites, 1410-2
waste sites, 1410-2
Right of way transactions, 1410-4
condemnations, 1410-5
federal agencies, 1410-4
other state agencies, 1410-5
private ownerships, 1410-4
railways, 1410-4
utilities, 1410-4
Right-turn at intersections at grade,
corners, 910-4, 910-15
lane guidelines, 910-26
pocket and taper, 910-6, 910-27
Right-turn lane, 910-5
Road approaches, 920-1, 1410-2, 1420-8
design considerations, 920-2
drainage requirements, 920-4
procedures, 920-4
road approach connection category, 920-2
road approach design template, 920-2
road approach spacing and corner clearance, 920-3
sight distance, 920-3
Roadside classification plan, 1300-2
Roadside development, 1300-1
design recommendations, 1300-3
design requirements, 1300-2
documentation, 1300-2
general, 1300-1
references, 1300-2
roadside classification plan, 1300-2
roadside manual, 1300-2
Roadside safety, 700-1
clear zone, 700-1, 700-2
hazards to be considered for mitigation, 700-2
median considerations, 700-5
other roadside safety features, 700-5
Roadsides, 640-7
bridge end slopes, 640-9
drainage ditches in embankment areas, 640-9
roadway sections in rock cuts, 640-7
side slopes, 640-7
stepped slopes, 640-9
Roadway, 640-2
drainage, 1210-2
sections, 640-3
shoulders, 640-4
traveled way cross slope, 640-2
turning roadway widths, 640-2
widths, 430-1, 440-4
Roadway and vehicle design characteristics, transit, 1060-10
articulated transit buses, 1060-11
large transit buses, 1060-11
paving sections, 1060-10
small transit buses, 1060-11
vehicle characteristics/specifications, 1060-11

Roadway widths for three-lane HOV on and off ramps, 1050-12, 1050-25
Rock cuts, 640-7
geotechnical investigation, 510-10
hazard, side slope, 700-3
Roundabouts, 910-2, 910-8, IL 4019.00
Route/design studies, 310-3
Rumble strips, 700-5
Rural Arterial Program, 120-5
Rural Deviation, Sample, 330-14, 330-15

S

Safety rest areas, 1030-1, 1210-3
Sawtooth bus berth design example, 1060-15
Scalehouse site, 1040-1
Screening of unsightly areas, 1300-2
Seal projects, 330-1
Secondary state highways, 120-4
Section 4(f) evaluation, 220-2, 220-6
Sections, roadway, 640-1
Selection of impact attenuator system, 720-4
Semidirectional interchange, 940-2
SEPA, 220-1
SEPA; Check List, 220-10
Separated HOV facility, definition, 1050-2
Separated roadway multi-lane, one-way or reversible, 1050-14, 1050-27
Separated roadway single-lane, one-way or reversible, 1050-13, 1050-26
Service, level of, 610-1
Shallow-seated instability, 1350-2
Shelter siting, 1060-21
Shelters:
passenger, 1060-10
pedestrian, 1060-5
Shoreline development permits, 240-10
Shoreline stabilization, 1350-1
Shoulder:
cross section, 640-4
driving, 1010-2
enforcement areas, 1050-9
shy distance, 910-7
slope, 640-4
turnouts, 1010-2
weight stations, 1040-2
width, 430-1, 440-4
Shy distance:
barrier curb, 910-7
definition, 1050-2
intersections, 910-9
islands, 910-7
turning vehicles, 910-10
Sidewalks, 1020-7, 1020-9
Sight distance, 650-1
at intersections, 910-9
decision sight distance, 650-4
design stopping sight distance, 650-2
existing stopping sight distance, 650-2
passing sight distance, 650-1
ramp, 940-4
road approach, 920-3
stopping sight distance, 650-2
stopping sight distance for crest vertical curves, 650-3
stopping sight distance for horizontal curves, 650-4
stopping sight distance for sag vertical curves, 650-4
Sight triangle, 910-10
Signals, traffic control, 850-1
geotechnical investigation, 510-7
Signing, 820-1
design components, 820-2
geotechnical investigation, 510-7
guide sign plan, 820-4
mileposts, 820-4
overhead installation, 820-3
Single-lane ramp meter with HOV bypass, 1050-15, 1050-28
Single point (urban) interchange, 940-3
Single slope barrier, 710-12
Site data for structures, 1110-1
additional data for grade separations, 1110-3
additional data for waterway crossings, 1110-2
additional data for widenings, 1110-4
geotechnical investigation, 510-3
required data for all structures, 1110-1
Slip ramp, typical, 1050-20, 1050-33
Slopes:
bridge end, 640-9
geotechnical investigation, 510-8
roadway, 640-2
shoulder, 640-4
side, 640-7
stepped, 640-9

Slotted Rail Terminal, 710-6
Slow moving vehicle turnouts, 1010-2
Soil bioengineering, 1350-1
design responsibilities and considerations, 1350-3
erosion control, 1350-3
streambank/shoreline stabilization, 1350-4
upland slope stabilization, 1350-4
uses, 1350-1
Soil bioengineering applications and the documents that support, 1350-3
Space, air, 1420-7
Special features, right of way, 1410-2
Special permits and approvals, 240-1
Speed, 440-3
Speed change lanes, 910-6
Standards:
design, 160-1
noise wall types, 1140-4
traffic interchanges, 940-1
State agencies, 240-1
State highway system, 120-4
State rail plan, 120-2
State routes, 120-4
Stepped slopes, 640-9
Stockpile site reclamation, 1410-2
Stopping sight distance, 430-2
crest vertical curve, 650-3
design criteria, 650-2
design stopping sight distance, 650-3
design stopping sight distance on grades, 650-3
effects of grade, 650-3
existing stopping sight distance, 650-3
horizontal curves, 650-4
sag vertical curves, 650-4
Streambank stabilization, 1350-2
Stream crossings, 1210-2
Structure clearances, 1120-2
Structure data, 1110-1
CAD files, 1110-1
photographs, 1110-2
reports, 1110-2
supplemental drawings, 1110-1
video, 1110-2
Study plan, 220-2, 220-4
Subsurface drainage, 1210-3
Sundry sites:
public lands, 240-8
right of way, 1410-2
source of materials, 510-1
Superelevation, 640-4
existing curves, 640-5
superelevation rates for open highways and ramps, 640-4
turning movements at intersections, 640-5
Superelevation runoff for highway curves, 640-5
Superelevation runoff for ramp curves, 640-6
Surface movement, 1350-2
Surfacing, 510-1, (see pavement structure, 520-1)
Surveillance, control, and driver information (SC&DI), 860-1
Surveying and mapping, 1440-1
after construction is completed, 1440-2
datums, 1440-2
documentation, 1440-3
during the project definition stage, 1440-1
during design and P.S. & E. development, 1440-1
general, 1440-1
geographic information system, 1440-3
global positioning system, 1440-2
photogrammetric surveys, 1440-3
procedures, 1440-1
reference, 1440-1
WSDOT monument database, 1440-2
Systems data and services, 130-1
Systems planning, 120-1

T

Taper, 910-6
Temporary right for construction (permit), 1410-3
Temporary road approach, 920-2
Terrain classification, 440-3
Traffic analysis, 130-2
for intersection at grade, 910-2
Traffic barriers (see Barriers)
Traffic control, 810-1
construction work zone traffic controls, 810-1
intersections, 910-10
procedures, 810-2
strategy, 810-1

use of law enforcement in work zone, 810-1
work zone traffic control design checklist, 810-2
Traffic flow control, 860-3
HOV bypass, 860-4
ramp meters, 860-3
Traffic interchanges, 940-1
definitions, 940-1
documentation, 940-10
collector distributor roads, 940-8
connections, 940-6
design, 940-2
on two-lane highways, 940-9
patterns, 940-2
plans, 940-10
ramps, 940-4
ramp design speed, 940-4
ramp grade, maximum, 940-5
ramp widths, 940-5
ramp terminal intersections at crossroads, 940-9
references, 940-1
spacing, 940-3
Traffic island design, 910-7
Traffic control devices:
channelization, 910-4
pavement markings, 830-1
signals, 850-1
Traffic Operations Center (TOC), 860-2
Traffic Systems Management Center (TSMC), 860-2
Traffic lanes, 440-4
Trails, 1020-9
Transfer/transit center, 1060-6
bus berths, 1060-7
flow/movement alternatives, 1060-7
introduction, 1060-6
Transit, 1060-1
flyer stop, 1050-5
Transit benefit facilities, 1060-1
bus stops and pullouts, 1060-7
design criteria characteristics, 1060-10
disabled accessibility, 1060-12
intersection radii, 1060-11
park and ride lots, 1060-1
passenger amenities, 1060-10
roadway and vehicle design criteria characteristics, 1060-10
transfer/transit centers, 1060-6
Transitions, pavement, 620-4
Transportation Improvement Board, 120-4
Transportation Plan, 120-1
Transportation Systems Management (TSM), 120-3
Travel data, 130-2
Travel services, 1030-1
Traveled way, 700-2
Traverse, specifications for, 1440-3
Triangulation, specifications for, 1440-3
Truck climbing lanes (see climbing lanes), 1010-2
Truck escape ramps (see emergency escape ramps), 1010-2
Truck-Mounted Attenuator (TMA), 720-3
Truck weigh stations, 1040-1
Turning path template, 910-13, 910-14, 1060-24
Turning ramp lane widths, 430-1
Turning roadway widths, 640-2, 430-1
Turnouts, 1010-3
Two-lane ramp meter with HOV bypass, 1050-16, 1050-29
Two-way left turn lanes, 910-5, 910-25
Types of standard walls, 1140-4
Typical bus shelter design, 1060-22

U

Upland slope stabilization, 1350-2
deep-seated instability, 1350-2
shallow-seated instability, 1350-2
surface movement, 1350-2
Urban Arterial Board, 120-5
Urban Arterial System, 120-4, 120-5
Urban extension of federal aid system, 120-4
Use of law enforcement in work zone, 810-1
Using a design matrix, 325-4
design levels, 325-4
design variances, 325-5
Utilities, 1410-4
Utility agreements, 240-10
U-turns, 910-9

V

Value engineering, 315-1
eight-phase job plan for VE studies, 315-5
implementation phase, 315-3
procedure, 315-1
request for value engineering study, 315-6

selection phase, 315-1
VE study team tools, 315-7
Vegetation, 1320-1
design guidelines, 1320-2
discussion, 1320-1
documentation, 1320-3
establishment of vegetation, 1320-3
existing vegetation, 1320-2
general, 1320-1
plant material selection, 1320-3
preliminary plans, 1320-1
recommendation, 1320-1
references, 1320-1
reviews, 1320-1
Vehicle turning path template, 910-4, 910-13, 910-14, 1060-23, 1060-24
Venture Washington, 860-1
Vertical alignment, 630-1
alignment on structures, 630-2
design controls, 630-1
length of grade 630-2
maximum grades, 630-2
minimum grades, 630-2
minimum length of vertical curves, 630-2
Vertical clearance, bridges, 1120-2
VE study team tools, 315-7
Videologging, 130-2
Viewpoints, 1030-1
Violation rate, definition, 1050-2

W

Walkways, 1020-8, 1120-3
Walls, retaining, 1130-1
Warrants for median barrier, 700-5, 700-15
Washington coordinate system, 1440-1
Waste site, 1300-2, 1410-2
Water quality permits, 240-7
Watercraft facilities, 1020-10
Waterway crossings, 1110-2
Weigh stations, truck, 1040-1
Wetlands, 220-5
Wheelchair curb ramps, 1020-9
Widening:
bridge, 1110-4
pavement, 620-4
Widths:
bridge, 430-5, 1120-2
HOV facilities, 1050-7
lane, 430-4, 440-4
Wildlife, Department of, 240-6
Wildlife warning reflectors, 830-4
Work zone traffic control strategy, 330-2, 330-11, 810-1
Work zone traffic control design checklist, 810-1
Woven geotextiles, 530-1
WSDOT furnished items, 160-1
WSDOT monument database, 1440-2

2:P65:DP/DMM