Washington State Department of Transportation

Publications Transmittal

Transmittal Number		Date
PT 02-002		February 2002

Publication Distribution
To: All English *Design Manual* holders

Publication Title	Publication Number
Design Manual (English) Revision 2002-1	M 22-01

Originating Organization
Environmental and Engineering Service Center, Design Office, Design Policy, Standards, and Safety Research Unit through Engineering Publications

Remarks and Instructions

Remarks:

1. This revision is provided in English (US common) units only. The metric *Design Manual* is now out-of-date and must not be used with respect to the chapters in this and future revisions.
2. IL 4019.01, "Roundabouts," is rescinded. Remove IL 4019.01 pages 1 & 2 and Appendix pages 1-22.
3. Manual holders are reminded that the Internet is updated when a revision is printed. CDs are up-to-date at the time of production-order only. Subsequent revisions can occur in the six months between orders for new CDs.
4. To order more paper copies of this revision; or if you no longer desire to receive paper revisions, wish a quantity change, or have an address change; see the contact information on the back of the *Design Manual* title page or visit the Internet site for Engineering Publications at http://www.wsdot.wa.gov/fasc/EngineeringPublications/
   This revision is also available from that website.

Instructions:

Page numbers and corresponding sheet-counts are given in the table below to indicate portions of the *Design Manual* that are to be removed and inserted to accomplish this revision.

Chapter	Remove		Insert	
	Pages	Sheets	Pages	Sheets
Contents	1-23	12	1-24	12
325 "Design Matrix Procedures"	1-15	8	1-15	8
340 "Minor Operational Enhancement Projects" (New)	N/A	N/A	1-11	6
410 "Basic Design Level"	1-2	1	1-2	1
430 "Modified Design Level"	9-10	1	9-10	1
520 "Design of Pavement Structure"	1-6	3	1-6	3
640 "Geometric Cross Section"	1-42	21	1-42	21
810 "Work Zone Traffic Control"	1-2	1	1-20	10
910 "Intersections at Grade"	1-38	19	1-38	19
915 "Roundabouts" (New)	N/A	N/A	1-29	15
DMSupplement "Median Barrier Guidelines"	N/A	N/A	1-4	2
Index	1-17	9	1-17	9

Distributed By	Phone Number	Signature
Directional Documents and Engineering Publications	(360) 705-7430 FAX: 705-6861	

DOT Form 761-003A EF
Revised 3/99

cc: Administrative Services, Directional Documents MS 47408

Washington State Department of Transportation

Design Manual Supplements and Instructional Letters

February 2002

In Effect	Chapter	Date	Type	Subject/Title
Yes	150	01/18/99	IL 4015.00	Right of Way Plan Development Process Improvements
No	330			(Chapter 330 revised June 1999)
No	1410			(Chapter 1410 revised June 1999)
Yes	940 1050 HOV*	9/28/99	DM Supplement	Left-Side HOV Direct Access Connections
Yes	1050 HOV*	05/03/00	DM Supplement	Left-Side HOV Parallel On-Connection
No	**915**	**07/03/00**	**IL 4019.01**	**Roundabouts (expiration extended)**
Yes	**700**	**08/01/01 Revised 11/15/01**	**DM Supplement**	**Median Barrier Guidelines**

* The *HOV Direct Access Design Guide*, Draft M 22-98

Notes:

- Changes since the last revision to the *Design Manual* are shown in bold print.
- Items with **No** in the **In Effect** column were superseded by the latest revision and will be dropped from the next printing of this list.
- The listed items marked *yes* have been posted to the web at the following location:

http://www.wsdot.wa.gov/fasc/engineeringpublications/DesignLettersMemInstruction.htm

Contents

			Date
Division 1	**General Information**		
120	Planning		May 2000
	120.01	General	
	120.02	References	
	120.03	Definitions	
	120.04	Legislation and Policy Development	
	120.05	Planning at WSDOT	
	120.06	Linking Transportation Plans	
	120.07	Linking WSDOT Planning to Programming	
Division 2	**Hearings, Environmental, and Permits**		
210	Public Involvement and Hearings		December 1998
	210.01	General	
	210.02	References	
	210.03	Definitions	
	210.04	Public Involvement	
	210.05	Hearings	
	210.06	Environmental Hearing	
	210.07	Corridor Hearing	
	210.08	Design Hearing	
	210.09	Access Hearing	
	210.10	Combined Hearings	
	210.11	Administrative Appeal Hearing	
	210.12	Documentation	
220	Project Environmental Documentation		June 1989
	220.01	General	
	220.02	Definitions	
	220.03	Project Classification	
	220.04	Class I, EIS	
	220.05	Class II, CE	
	220.06	Class III, EA/Checklist	
	220.07	Project Reevaluation	
	220.08	Project Reviews	
240	Permits and Approvals From Other Governmental Agencies		September 1990
	240.01	General	(240-13 and 14 June 1989)
	240.02	United States Department of the Army-Corps of Engineers	
	240.03	United States Coast Guard	
	240.04	United States Forest Service	
	240.05	Federal Aviation Administration	
	240.06	FHWA — Western Federal Lands Highway Division	
	240.07	Federal Energy Regulatory Commission	
	240.08	Environmental Protection Agency	

Date

240.09 Washington State Departments of Fisheries and Wildlife
240.10 Washington State Department of Ecology
240.11 Washington State Department of Natural Resources
240.12 Washington State Department of Labor and Industries
240.13 Local Agencies
240.14 Utility Agreements

Division 3 Project Documentation

315 Value Engineering August 1998
315.01 General
315.02 References
315.03 Definitions
315.04 Procedure
315.05 Documentation

325 Design Matrix Procedures May 2001
325.01 General (325-2, 3, 6, 7, 11 through 15 February 2002)
325.02 Terminology
325.03 Design Matrix Procedures
325.04 Selecting a Design Matrix
325.05 Project Type
325.06 Using a Design Matrix

330 Design Documentation, Approval, and Process Review May 2001
330.01 General
330.02 References
330.03 Purpose
330.04 Project Development
330.05 Project Definition Phase
330.06 Design Documentation
330.07 Design Approval
330.08 Process Review

340 Minor Operational Enhancement Projects February 2002
340.01 General
340.02 References
340.03 Definitions
340.04 Minor Operational Enhancement Matrix Procedures
340.05 Selecting a Minor Operational Enhancement Matrix
340.06 Project Type
340.07 Using a Minor Operational Enhancement Matrix
340.08 Project Approval
340.09 Documentation

Division 4 Project Design Criteria

410 Basic Design Level May 2001
410.01 General (410-2 February 2002)
410.02 Required Basic Safety Items of Work
410.03 Minor Safety and Minor Preservation Work

Date

430 Modified Design Level May 2001
430.01 General (430-10 February 2002)
430.02 Design Speed
430.03 Roadway Widths
430.04 Ramp Lane Widths
430.05 Stopping Sight Distance
430.06 Profile Grades
430.07 Cross Slope
430.08 Fill Slopes and Ditch Inslopes
430.09 Intersections
430.10 Bridges
430.11 Documentation

440 Full Design Level May 2001
440.01 General
440.02 References
440.03 Definitions
440.04 Functional Classification
440.05 Terrain Classification
440.06 Geometric Design Data
440.07 Design Speed
440.08 Traffic Lanes
440.09 Shoulders
440.10 Medians
440.11 Curbs
440.12 Parking
440.13 Pavement Type
440.14 Structure Width
440.15 Grades

Division 5 Soils and Paving

510 Investigation of Soils and Surfacing Materials November 1999
510.01 General
510.02 References
510.03 Materials Sources
510.04 Geotechnical Investigation, Design, and Reporting
510.05 Use of Geotechnical Consultants
510.06 Geotechnical Work by Others
510.07 Surfacing Report
510.08 Documentation

520 Design of Pavement Structure April 1998
520.01 Introduction (520-1 through 6 February 2002)
520.02 Estimating Tables

530 Geosynthetics April 1998
530.01 General (530-13 November 1999)
530.02 References
530.03 Geosynthetic Types and Characteristics
530.04 Geosynthetic Function Definitions and Applications

			Date
	530.05	Design Approach for Geosynthetics	
	530.06	Design Responsibility	
	530.07	Documentation	

Division 6 Geometrics

610	Highway Capacity		June 1989
	610.01	General	
	610.02	Definitions and Symbols	
	610.03	Design	
620	Geometric Plan Elements		April 1998
	620.01	General	(620-1 May 2001)
	620.02	References	(620-2 and 3 April 1998)
	620.03	Definitions	(620-4 November 1999)
	620.04	Horizontal Alignment	
	620.05	Distribution Facilities	
	620.06	Number of Lanes and Arrangement	
	620.07	Pavement Transitions	
	620.08	Procedures	
	620.09	Documentation	
630	Geometric Profile Elements		April 1998
	630.01	General	(630-2 May 2001)
	630.02	References	
	630.03	Vertical Alignment	
	630.04	Coordination of Vertical and Horizontal Alignments	
	630.05	Airport Clearance	
	630.06	Railroad Crossings	
	630.07	Procedures	
	630.08	Documentation	
640	Geometric Cross Section		February 2002
	640.01	General	
	640.02	References	
	640.03	Definitions	
	640.04	Roadways	
	640.05	Superelevation	
	640.06	Medians and Outer Separations	
	640.07	Roadsides	
	640.08	Roadway Sections	
	640.09	Documentation	
650	Sight Distance		April 1998
	650.01	General	(650-3 June 1999)
	650.02	References	(650-4 November 1999)
	650.03	Definitions	(650-8 May 2000)
	650.04	Passing Sight Distance	(650-9 May 2001)
	650.05	Stopping Sight Distance	
	650.06	Decision Sight Distance	

			Date
Division 7	**Roadside Safety Elements**		
700	Roadside Safety		August 1997
	700.01	General	(700-1, 2, and 5 May 2001)
	700.02	References	(700-3 April 1998)
	700.03	Definitions	(700-8 June 1999)
	700.04	Clear Zone	
	700.05	Hazards to be Considered for Mitigation	
	700.06	Median Considerations	
	700.07	Other Roadside Safety Features	
	700.08	Documentation	
710	Traffic Barriers		May 2000
	710.01	General	
	710.02	References	
	710.03	Definitions	
	710.04	Project Requirements	
	710.05	Barrier Design	
	710.06	Beam Guardrail	
	710.07	Cable Barrier	
	710.08	Concrete Barrier	
	710.09	Special Use Barriers	
	710.10	Redirectional Land Forms	
	710.11	Bridge Rails	
	710.12	Other Barriers	
	710.13	Documentation	
720	Impact Attenuator Systems		June 1999
	720.01	Impact Attenuator Systems	
	720.02	Design Criteria	
	720.03	Selection	
	720.04	Documentation	
Division 8	**Traffic Safety Elements**		
810	Work Zone Traffic Control		February 2002
	810.01	General	
	810.02	References	
	810.03	Public Information	
	810.04	Work Zone Classification	
	810.05	Work Zone Types	
	810.06	Project Definition	
	810.07	Work Zone Safety	
	810.08	Regulatory Traffic Control Strategies	
	810.09	Traffic Control Plans and Devices	
	810.10	Documentation	
820	Signing		November 1999
	820.02	References	
	820.03	Design Components	
	820.04	Overhead Installation	

			Date
	820.05	Mileposts	
	820.06	Guide Sign Plan	
	820.07	Documentation	
830	Delineation		May 2000
	830.01	General	
	830.02	References	
	830.03	Pavement Markings	
	830.04	Guide Posts	
	830.05	Barrier Delineation	
	830.06	Wildlife Warning Reflectors	
	830.07	Documentation	
840	Illumination		May 2000
	840.01	General	
	840.02	References	
	840.03	Definitions	
	840.04	Required Illumination	
	840.05	Additional Illumination	
	840.06	Design Criteria	
	840.07	Documentation	
850	Traffic Control Signals		May 2001
	850.01	General	
	850.02	References	
	850.03	Definitions	
	850.04	Procedures	
	850.05	Signal Warrants	
	850.06	Conventional Traffic Signal Design	
	850.07	Documentation	
860	Intelligent Transportation Systems		November 1999
	860.01	General	
	860.02	References	
	860.03	Traffic Data Collection	
	860.04	Traffic Flow Control	
	860.05	Motorist Information	
	860.06	Documentation	

Division 9 Interchanges and Intersections

910	Intersections at Grade		May 2001
	910.01	General	(910-1 through 3, 8, 10, 13 February 2002)
	910.02	References	(910-23 through 25, 29, 30 February 2002)
	910.03	Definitions	
	910.04	Design Considerations	
	910.05	Design Vehicle	
	910.06	Right-Turn Corners	
	910.07	Channelization	
	910.08	Roundabouts	
	910.09	U-Turns	
	910.10	Sight Distance at Intersections	

Date

910.11 Traffic Control at Intersections
910.12 Interchange Ramp Terminals
910.13 Procedures
910.14 Documentation

915 Roundabouts February 2002
915.01 General
915.02 References
915.03 Definitions
915.04 Roundabout Categories
915.05 Capacity Analysis
915.06 Geometric Design
915.07 Pedestrians
915.08 Bicycles
915.09 Signing and Pavement Markings
915.10 Illumination
915.11 Access, Parking, and Transit Facilities
915.12 Procedures
915.13 Documentation

920 Road Approaches April 1998
920.01 General (920-5 and 6 November 1999)
920.02 References (920-8 and 9 May 2001)
920.03 Definitions
920.04 Design Considerations
920.05 Road Approach Connection Category
920.06 Road Approach Design Template
920.07 Sight Distance
920.08 Road Approach Spacing and Corner Clearance
920.09 Drainage Requirements
920.10 Procedures
920.11 Documentation

930 Railroad Grade Crossings June 1989
930.01 General (930-4, 6 through 12 March 1994)
930.02 References
930.03 Plans
930.04 Traffic Control Systems
930.05 Stopping Lanes
930.06 Types of Crossing Surfaces
930.07 Crossing Closure
930.08 Traffic Controls During Construction and Maintenance
930.09 Railroad Grade Crossing Orders
930.10 Longitudinal Easements From Railroad

940 Traffic Interchanges June 1999
940-01 General (940-4 May 2001)
940.02 References (940-5 through 7 May 2000)
940.03 Definitions (940-10 November 1999)
940.04 Interchange Design (940-15, 17 through 20 May 2000)
940.05 Ramps (940-23 through 32 May 2000)

Date

940.06 Interchange Connections
940.07 Ramp Terminal Intersections at Crossroads
940.08 Interchanges on Two-Lane Highways
940.09 Interchange Plans
940.10 Documentation

960 Median Crossovers August 1997
960.01 General
960.02 Analysis
960.03 Design
960.04 Approval
960.05 Documentation

Division 10 Auxiliary Facilities

1010 Auxiliary Lanes November 1999
1010.01 General (1010-2 and 8 May 2001)
1010.02 References
1010.03 Definitions
1010.04 Climbing Lanes
1010.05 Passing Lanes
1010.06 Slow Moving Vehicle Turnouts
1010.07 Shoulder Driving for Slow Vehicles
1010.08 Emergency Escape Ramps
1010.09 Chain-Up Areas
1010.10 Documentation

1020 Bicycle Facilities May 2001
1020.01 General
1020.02 References
1020.03 Definitions
1020.04 Planning
1020.05 Design
1020.06 Documentation

1025 Pedestrian Design Considerations May 2001
1025.01 General
1025.02 References
1025.03 Definitions
1025.04 Policy
1025.05 Pedestrian Human Factors
1025.06 Pedestrian Activity Generators
1025.07 Pedestrian Facility Design
1025.08 Documentation

1030 Safety Rest Areas and Travel Services June 1999
1030.01 General (1030-3 through 5 November 1999)
1030.02 References
1030.03 Documentation

Date

1040 Weigh Sites May 2000
1040.01 General
1040.02 Definitions
1040.03 Planning, Development, and Responsibilities
1040.04 Permanent Facilities
1040.05 Portable Facilities
1040.06 Shoulder Sites
1040.07 Federal Participation
1040.08 Procedures
1040.09 Documentation

1050 High Occupancy Vehicle Priority Treatment June 1995
1050.01 General
1050.02 Definitions
1050.03 References
1050.04 Preliminary Design and Planning
1050.05 Operations
1050.06 Design Criteria
1050.07 Arterial HOV

1060 Transit Benefit Facilities December 1991
1060.01 Introduction (1060-14 March 1994)
1060.02 Definitions (1060-16 through 18 March 1994)
1060.03 Park and Ride Lots (1060-19 November 1997)
1060.04 Transfer/Transit Centers (1060-20 through 22 March 1994)
1060.05 Bus Stops and Pullouts (1060-23 and 24 July 1994)
1060.06 Passenger Amenities (1060-25 through 34 March 1994)
1060.07 Roadway and Vehicle (1060-35 and 36 July 1994)
Design Criteria Characteristics (1060-37 and 38 March 1994)
1060.08 Intersection Radii`
1060.09 Disabled Accessibility
1060.10 References

Division 11 Structures

1110 Site Data for Structures April 1998
1110.01 General (1110-3 through 5 November 1999)
1110.02 References
1110.03 Required Data for All Structures
1110.04 Additional Data for Waterway Crossings
1110.05 Additional Data for Grade Separations
1110.06 Additional Data for Widenings
1110.07 Documentation

1120 Bridges May 2000
1120.01 General
1120.02 References
1120.03 Bridge Location
1120.04 Bridge Site Design Elements
1120.05 Documentation

Date

1130 Retaining Walls and Steep Reinforced Slopes December 1998
1130.01 References (1130-1 November 1999)
1130.02 General (1130-4 through 13 May 2001)
1130.03 Design Principles
1130.04 Design Requirements
1130.05 Guidelines for Wall/Slope Selection
1130.06 Design Responsibility and Process
1130.07 Documentation

1140 Noise Barriers December 1998
1140.01 General
1140.02 References
1140.03 Design
1140.04 Procedures
1140.05 Documentation

Division 12 Hydraulics

1210 Hydraulic Design December 1998
1210.01 General (1210-2 May 2001)
1210.02 References
1210.03 Hydraulic Considerations
1210.04 Safety Considerations
1210.05 Design Responsibility

Division 13 Roadside Development

1300 Roadside Development and Highway Beautification June 1999
1300.01 General
1300.02 References
1300.03 Roadside Classification Plan
1300.04 Roadside Manual
1300.05 Design Requirements
1300.06 Documentation
1300.07 Design Recommendations

1310 Contour Grading June 1999
1310.01 General
1310.02 References
1310.03 Procedures
1310.04 Recommendations

1320 Vegetation June 1999
1320.01 General
1320.02 References
1320.03 Discussion
1320.04 Recommendations
1320.05 Design Guidelines
1320.06 Documentation

Date

1330 Irrigation June 1999
1330.01 General
1330.02 References
1330.03 Design Considerations

1350 Soil Bioengineering May 2000
1350.01 General
1350.02 References
1350.03 Uses
1350.04 Design Responsibilities and Considerations
1350.05 Documentation

Division 14 Right of Way and Access Control

1410 Right of Way Considerations June 1999
1410.01 General
1410.02 References
1410.03 Special Features
1410.04 Easements and Permits
1410.05 Programming for Funds
1410.06 Appraisal and Acquisition
1410.07 Transactions
1410.08 Documentation

1420 Access Control Design Policy June 1989
1420.01 General (1420-4 March 1994)
1420.02 Full Access Control Criteria (1420-11 through 21 March 1994)
1420.03 Partial Access Control Criteria
1420.04 Modified Access Control Criteria
1420.05 Access Approaches
1420.06 Approaches Between Limited Access Highways and Adjacent Railroads
1420.07 Frontage Roads
1420.08 Multiple Use of Right of Way for Nonhighway Purposes
1420.09 Modifications to Established Limited Access Plans

1425 Access Point Decision Report May 2000
1425.01 General
1425.02 References
1425.03 Definitions
1425.04 Procedures
1425.05 Access Point Decision Report and Supporting Analyses
1425.06 Documentation

1430 Development of Access Control June 1989
1430.01 General
1430.02 Access Report
1430.03 Access Hearing

1440 Surveying and Mapping June 1999
1440.01 General (1440-2 May 2001)

		Date
	1440.02 References	
	1440.03 Procedures	
	1440.04 Datums	
	1440.05 Global Positioning System	
	1440.06 WSDOT Monument Database	
	1440.07 Geographic Information System	
	1440.08 Photogrammetric Surveys	
	1440.09 Documentation	
1450	Monumentation	May 2001
	1450.01 General	
	1450.02 References	
	1450.03 Definitions	
	1450.04 Control Monuments	
	1450.05 Alignment Monuments	
	1450.06 Property Corners	
	1450.07 Other Monuments	
	1450.08 Documentation	
	1450.09 Filing Requirements	
1460	Fencing	June 1999
	1460.01 General	
	1460.02 References	
	1460.03 Design Criteria	
	1460.04 Fencing Types	
	1460.05 Gates	
	1460.06 Procedure	
	1460.07 Documentation	
Index		February 2002

Figures

Figure Number	Title	Page	Last Date
120-1	Planning Organizations	120-3	May 2000
120-2	Transportation Plan Relationships	120-17	May 2000
120-3	RTIP, MTIP, and STIP Development Process	120-18	May 2000
120-4	Planning and Programming Links	120-19	May 2000
210-1	Sequence for a Hearing	210-16	December 1998
220-1	Environmental Process Flow Chart	220-14	June 1989
240-1a	Permits and Approvals	240-11	September 1990
240-1b	Permits and Approvals	240-12	September 1990
240-2	FAA Notice Requirement Related to Highways	240-13	June 1989
240-3	DNR Area Management Units	240-14	June 1989
315-1	Eight-Phase Job Plan for VE Studies	315-5	August 1998
315-2	Request for Value Engineering Study	315-6	August 1998
315-3	VE Study Team Tools	315-7	August 1998
325-1	Design Matrix Selection Guide	325-4	May 2001
325-2a	NHS Highways in Washington	325-6	February 2002
325-2b	NHS Highways in Washington (continued)	325-7	February 2002
325-3a	Preservation Program	325-8	May 2001
325-3b	Improvement Program	325-9	May 2001
325-3c	Improvement Program (continued)	325-10	May 2001
325-4	Design Matrix 1 — Interstate Routes (Main Line)	325-11	February 2002
325-5	Design Matrix 2 — Interstate Interchange Areas	325-12	February 2002
325-6	Design Matrix 3 — NHS Routes (Main Line)	325-13	February 2002
325-7	Design Matrix 4 — Non-Interstate Interchange Areas	325-14	February 2002
325-8	Design Matrix 5 — Non-NHS Routes	325-15	February 2002
330-1	Design Approval Level	330-7	May 2001
330-2	Reviews and Approvals	330-8	May 2001
330-3a	Reviews and Approvals, Design	330-9	May 2001
330-3b	Reviews and Approvals, Design (continued)	330-10	May 2001
330-4	PS&E Process Approvals	330-11	May 2001
330-5a	Sample Project Analysis	330-12	May 2001
330-5b	Sample Project Analysis	330-13	May 2001
330-6	Sample Evaluate Upgrade (EU)	330-14	May 2001
340-1	Minor Operational Enhancement Matrix Selection Guide	340-4	February 2002
340-2	Minor Operational Enhancement Matrix 1	340-7	February 2002
	Interstate & NHS Freeway Routes		
	Figure 340-2	340-7	February 2002
340-3	Minor Operational Enhancement Matrix 2		
	NHS Nonfreeway Routes	340-8	February 2002
340-4	Minor Operational Enhancement Matrix 3		
	Non-NHS Routes	340-9	February 2002
340-5a	Q Project Design Summary/Approval Template	340-10	February 2002
340-5b	Q Project Design Summary/Approval Template (continued)	340-11	February 2002

Figure Number	Title	Page	Last Date
430-1	Turning Ramp Lane Widths Modified Design Level	430-1	May 2001
430-2	Design Vehicles Modified Design Level	430-3	May 2001
430-3	Modified Design Level for Multilane Highways and Bridges	430-4	May 2001
430-4	Modified Design Level for Two-Lane Highways and Bridges	430-5	May 2001
430-5	Minimum Total Roadway Widths for Two-Lane Highway Curves	430-6	November 1997
430-6	Minimum Total Roadway Widths for Two-Lane Highway Curves, Δ<90° — Modified Design Level	430-7	May 2001
430-7	Evaluation for Stopping Sight Distance for Crest Vertical Curves — Modified Design Level	430-8	May 2001
430-8	Evaluation for Stopping Sight Distance for Horizontal Curves — Modified Design Level	430-9	May 2001
430-9	Main Line Roadway Sections — Modified Design Level	430-10	February 2002
430-10	Ramp Roadway Sections — Modified Design Level	430-11	May 2001
440-1	Desirable Design Speed	440-4	May 2001
440-2	Minimum Shoulder Width	440-5	May 2001
440-3	Shoulder Width for Curb	440-6	May 2001
440-4	Geometric Design Data, Interstate	440-9	May 2001
440-5a	Geometric Design Data, Principle Arterial	440-10	May 2001
440-5b	Geometric Design Data, Principle Arterial	440-11	May 2001
440-6a	Geometric Design Data, Minor Arterial	440-12	May 2001
440-6b	Geometric Design Data, Minor Arterial	440-13	May 2001
440-7a	Geometric Design Data, Collector	440-14	May 2001
440-7b	Geometric Design Data, Collector	440-15	May 2001
510-1	Material Source Development Plan	510-16	November 1999
520-1	Estimating — Miscellaneous Tables	520-2	February 2002
520-2a	Estimating — Asphalt Concrete Pavement and Asphalt Distribution Tables	520-3	February 2002
520-2b	Estimating — Asphalt Concrete Pavement and Asphalt Distribution Tables	520-4	February 2002
520-3	Estimating — Bituminous Surface Treatment	520-5	February 2002
520-4	Estimating — Base and Surfacing Typical Section Formulae and Example	520-6	February 2002
520-5a	Estimating — Base and Surfacing Quantities	520-7	April 1998
520-5b	Estimating — Base and Surfacing Quantities	520-8	April 1998
520-5c	Estimating — Base and Surfacing Quantities	520-9	April 1998
520-5d	Estimating — Base and Surfacing Quantities	520-10	April 1998
520-5e	Estimating — Base and Surfacing Quantities	520-11	April 1998
520-5f	Estimating — Base and Surfacing Quantities	520-12	April 1998
520-5g	Estimating — Base and Surfacing Quantities	520-13	April 1998
520-5h	Estimating — Base and Surfacing Quantities	520-14	April 1998
530-1	Selection Criteria for Geotextile Class	530-3	April 1998
530-2	Maximum Sheet Flow Lengths for Silt Fences	530-8	April 1998
530-3	Maximum Contributing Area for Ditch and Swale Applications	530-8	April 1998
530-4	Design Process for Drainage and Erosion Control Geotextiles and Nonstandard Applications	530-12	April 1998

Figure Number	Title	Page	Last Date
530-5	Design Process for Separation, Soil Stabilization, and Silt Fence	530-13	November 1999
530-6a	Examples of Various Geosynthetics	530-14	April 1998
530-6b	Examples of Various Geosynthetics	530-15	April 1998
530-7a	Geotextile Application Examples	530-16	April 1998
530-7b	Geotextile Application Examples	530-17	April 1998
530-7c	Geotextile Application Examples	530-18	April 1998
530-7d	Geotextile Application Examples	530-19	April 1998
530-8	Definition of Slope Length	530-20	April 1998
530-9	Definition of Ditch or Swale Storage Length and Width	530-21	April 1998
530-10	Silt Fences for Large Contributing Area	530-22	April 1998
530-11	Silt Fence End Treatment	530-23	April 1998
530-12	Gravel Check Dams for Silt Fences	530-24	April 1998
610-1	Type of Area and Appropriate Level of Service	610-3	June 1989
610-2	Adjustment Factor for Type of Multilane Highway and Development Environment, f_E	610-3	June 1989
610-3	Maximum ADT vs. Level of Service and Type of Terrain for Two-Lane Rural Highways	610-4	June 1989
610-4	Service Flow Rate per Lane (SFL) for Multilane Highways	610-5	June 1989
610-5	Peak-Hour Factors	610-6	June 1989
610-6	Service Flow Rates per Lane (SFL) for Freeways	610-6	June 1989
620-1a	Alignment Examples	620-6	April 1998
620-1b	Alignment Examples	620-7	April 1998
620-1c	Alignment Examples	620-8	April 1998
630-1a	Coordination of Horizontal and Vertical Alignments	630-4	April 1998
630-1b	Coordination of Horizontal and Vertical Alignments	630-5	April 1998
630-1c	Coordination of Horizontal and Vertical Alignments	630-6	April 1998
630-2	Grade Length	630-7	April 1998
630-3	Grading at Railroad Crossings	630-8	April 1998
640-1	Minimum Radius for Normal Crown Section	640-5	February 2002
640-2	Side Friction Factor	640-5	February 2002
640-3	Divided Highway Roadway Sections	640-10	February 2002
640-4	Undivided Multilane Highway Roadway Sections	640-11	February 2002
640-5	Two-Lane Highway Roadway Sections	640-12	February 2002
640-6a	Ramp Roadway Sections	640-13	February 2002
640-6b	Ramp Roadway Sections	640-14	February 2002
640-7a	Traveled Way Width for Two-Way Two-Lane Turning Roadways	640-15	February 2002
640-7b	Traveled Way Width for Two-Way Two-Lane Turning Roadways	640-16	February 2002
640-8a	Traveled Way Width for Two-Lane One-Way Turning Roadways	640-17	February 2002
640-8b	Traveled Way Width for Two-Lane One-Way Turning Roadways	640-18	February 2002
640-9a	Traveled Way Width for One-Lane Turning Roadways	640-19	February 2002

Figure Number	Title	Page	Last Date
640-9b	Traveled Way Width for One-Lane Turning Roadways	640-20	February 2002
640-9c	Traveled Way Width for One-Lane Turning Roadways	640-21	February 2002
640-10a	Shoulder Details	640-22	February 2002
640-10b	Shoulder Details	640-23	February 2002
640-11a	Superelevation Rates (10% Max)	640-24	February 2002
640-11b	Superelevation Rates (6% Max)	640-25	February 2002
640-11c	Superelevation Rates (8% Max)	640-26	February 2002
640-12	Superelevation Rates for Turning Roadways at Intersections	640-27	February 2002
640-13a	Superelevation Transitions for Highway Curves	640-28	February 2002
640-13b	Superelevation Transitions for Highway Curves	640-29	February 2002
640-13c	Superelevation Transitions for Highway Curves	640-30	February 2002
640-13d	Superelevation Transitions for Highway Curves	640-31	February 2002
640-13e	Superelevation Transitions for Highway Curves	640-32	February 2002
640-14a	Superelevation Transitions for Ramp Curves	640-33	February 2002
640-14b	Superelevation Transitions for Ramp Curves	640-34	February 2002
640-15a	Divided Highway Median Sections	640-35	February 2002
640-15b	Divided Highway Median Sections	640-36	February 2002
640-15c	Divided Highway Median Sections	640-37	February 2002
640-16a	Roadway Sections in Rock Cuts, Design A	640-38	February 2002
640-16b	Roadway Sections in Rock Cuts, Design B	640-39	February 2002
640-17	Roadway Sections With Stepped Slopes	640-40	February 2002
640-18a	Bridge End Slopes	640-41	February 2002
640-18b	Bridge End Slopes	640-42	February 2002
650-1	Passing Sign Distance	650-1	April 1998
650-2	Design Stopping Sight Distance	650-3	June 1999
650-3	Existing Stopping Sight Distance	650-3	June 1999
650-4	Design Stopping Sight Distance on Grades	650-3	June 1999
650-5	Decision Sight Distance	650-5	April 1998
650-6	Passing Sight Distance for Crest Vertical Curves	650-6	April 1998
650-7	Stopping Sight Distance for Crest Vertical Curves	650-7	April 1998
650-8	Stopping Sight Distance for Sag Vertical Curves	650-8	May 2000
650-9	Horizontal Stopping Sight Distance	650-9	May 2001
700-1	Design Clear Zone Distance Table	700-8	June 1999
700-2	Design Clear Zone Inventory Form	700-9	August 1997
700-3	Recovery Area	700-11	August 1997
700-4	Design Clear Zone for Ditch Sections	700-12	August 1997
700-5	Guidelines for Embankment Barrier	700-13	August 1997
700-6	Mailbox Location and Turnout Design	700-14	August 1997
700-7	Warrants for Median Barrier	700-15	August 1997
700-8	Glare Screens	700-16	August 1997
710-1	Type 7 Bridge Rail Upgrade Criteria	710-3	May 2000
710-2	Longitudinal Barrier Deflection	710-4	May 2000
710-3	Longitudinal Barrier Flare Rates	710-5	May 2000
710-4	Guardrail Locations on Slopes	710-6	May 2000
710-5	Old Type 3 Anchor	710-8	May 2000

Figure Number	Title	Page	Last Date
710-6	Guardrail Connections	710-9	May 2000
710-7	Transitions and Connections	710-10	May 2000
710-8	Concrete Barrier Shapes	710-12	May 2000
710-9	Single Slope Concrete Barrier	710-13	May 2000
710-10	Safety Shaped Concrete Bridge Rail Retrofit	710-16	May 2000
710-11a	Barrier Length of Need	710-18	May 2000
710-11b	Barrier Length of Need	710-19	May 2000
710-11c	Barrier Length of Need on Curves	710-20	May 2000
710-12	Beam Guardrail Post Installation	710-21	May 2000
710-13	Beam Guardrail Terminals	710-22	May 2000
710-14	Cable Barrier Locations on Slopes	710-23	May 2000
710-15	Thrie Beam Bridge Rail Retrofit Criteria	710-24	May 2000
720-1	Impact Attenuator Sizes	720-4	June 1999
720-2a	Impact Attenuator Systems Permanent Installations	720-6	June 1999
720-2b	Impact Attenuator Systems Permanent Installations	720-7	June 1999
720-2c	Impact Attenuator Systems Permanent Installations	720-8	June 1999
720-3	Impact Attenuator Systems Work Zone Installations	720-9	June 1999
720-4a	Impact Attenuator Systems — Older Systems	720-10	June 1999
720-4b	Impact Attenuator Systems — Older Systems	720-11	June 1999
720-5	Impact Attenuator Comparison	720-12	June 1999
810-1a	Work Zone Types	810-13	February 2002
810-1b	Work Zone Types	810-14	February 2002
810-1c	Work Zone Types	810-15	February 2002
810-2a	Sign Placement — Rural Areas	810-16	February 2002
810-2b	Sign Placement — Urban Areas	810-17	February 2002
810-3	Channelization Devices	810-18	February 2002
810-4	Barricade Types	810-19	February 2002
810-5	Barrier Delineators	810-20	February 2002
820-1a	Sign Support Locations	820-5	November 1999
820-1b	Sign Support Locations	820-6	November 1999
820-2	Wood Posts	820-7	November 1999
820-3	Steel Posts	820-8	November 1999
820-4	Laminated Wood Box Posts	820-9	November 1999
830-1	Pavement Marking Material Guide	830-6	May 2000
830-2	Guide Post Placement	830-7	May 2000
830-3	Wildlife Reflectors on a Tangent Section	830-8	May 2000
830-4	Wildlife Reflectors on the Outside of the Curve	830-8	May 2000
840-1	Freeway Lighting Applications	840-11	May 2000
840-2	Freeway Lighting Applications	840-12	May 2000
840-3	Roadway Lighting Applications	840-13	May 2000
840-4	Roadway Lighting Applications	840-14	May 2000
840-5	Roadway Lighting Applications	840-15	May 2000
840-6	Light Levels and Uniformity Ratio	840-16	May 2000
840-7	Light Standard Locations	840-17	May 2000
840-8	Light Standard heights, Conductor, and Conduit Properties	840-18	May 2000
840-9a	Line Loss Calculations	840-19	May 2000

Figure Number	Title	Page	Last Date
840-9b	Line Loss Calculations	840-20	May 2000
840-10a	Illumination Calculation Example	840-21	May 2000
840-10b	Illumination Calculation Example	840-22	May 2000
840-10c	Illumination Calculation Example	840-23	May 2000
840-10d	Illumination Calculation Example	840-24	May 2000
850-1	Signal Display Maximum Heights	850-13	May 2001
850-2	Signal Display Areas	850-14	May 2001
850-3	Responsibility for Facilities	850-17	May 2001
850-4	Standard Intersection Movements and Head Numbers	850-18	May 2001
850-5	Phase Diagrams-Four Way Intersections	850-19	May 2001
850-6	Turn Lane Configuration Preventing Concurrent Phasing Double Left Turn Channelization	850-20	May 2001
850-7	Railroad Preemption Phasing	850-21	May 2001
850-8a	Pedestrian Push Button Locations	850-22	May 2001
850-8b	Pedestrian Push Button Locations	850-23	May 2001
850-9	Dilemma Zone Loop Placement	850-24	May 2001
850-10	Railroad Queue Clearance	850-25	May 2001
850-11a	Intersections With Railroad Crossings	850-26	May 2001
850-11b	Intersections With Railroad Crossings	850-27	May 2001
850-12a	Traffic Signal Display Placements	850-28	May 2001
850-12b	Traffic Signal Display Placements	850-29	May 2001
850-12c	Traffic Signal Display Placements	850-30	May 2001
850-12d	Traffic Signal Display Placements	850-31	May 2001
850-12e	Traffic Signal Display Placements	850-32	May 2001
850-13	Mast Arm Signal Moment and Foundation Depths	850-33	May 2001
850-14a	Strain Pole and Foundation Selection Procedure	850-34	May 2001
850-14b	Strain Pole and Foundation Selection Procedure	850-35	May 2001
850-15	Strain Pole and Foundation Selection Example	850-36	May 2001
850-16	Conduit and Conductor Sizes	850-37	May 2001
910-1	Minimum Intersection Spacing	910-4	May 2001
910-2	Design Vehicle Types	910-4	May 2001
910-3	Intersection Design Vehicle	910-5	May 2001
910-4	Left-Turn Storage With Trucks (ft)	910-7	May 2001
910-5	U-Turn Spacing	910-10	February 2002
910-6	Sight Distance for Turning Vehicles	910-11	May 2001
910-7a	Turning Path Template	910-14	May 2001
910-7b	Turning Path Template	910-15	May 2001
910-7c	Turning Path Template	910-16	May 2001
910-8	Right-Turn Corner	910-17	May 2001
910-9a	Left-Turn Storage Guidelines (Two-Lane, Unsignalized)	910-18	May 2001
910-9b	Left-Turn Storage Guidelines (Four-Lane, Unsignalized)	910-19	May 2001
910-10a	Left-Turn Storage Length (Two-Lane, Unsignalized)	910-20	May 2001
910-10b	Left-Turn Storage Length (Two-Lane, Unsignalized)	910-21	May 2001
910-10c	Left-Turn Storage Length (Two-Lane, Unsignalized)	910-22	May 2001
910-11a	Median Channelization (Widening)	910-23	February 2002
910-11b	Median Channelization — Median Width 23 ft to 26 ft	910-24	February 2002

Figure Number	Title	Page	Last Date
910-11c	Median Channelization — Median Width of More Than 26 ft	910-25	February 2002
910-11d	Median Channelization (Minor Intersection)	910-26	May 2001
910-11e	Median Channelization (Two-Way Left-Turn Lane)	910-27	May 2001
910-12	Right-Turn Lane Guidelines	910-28	May 2001
910-13	Right-Turn Pocket and Right-Turn Taper	910-29	February 2002
910-14	Right-Turn Lane	910-30	February 2002
910-15	Acceleration Lane	910-31	May 2001
910-16a	Traffic Island Designs	910-32	May 2001
910-16b	Traffic Island Designs (Compound Curve)	910-33	May 2001
910-16c	Traffic Island Designs	910-34	May 2001
910-17	U-Turn Locations	910-35	May 2001
910-18a	Sight Distance for Grade Intersection With Stop Control	910-36	May 2001
910-18b	Sight Distance at Intersections	910-37	May 2001
910-19	Interchange Ramp Details	910-38	May 2001
915-1	Roundabout Elements	915-3	February 2002
915-2	Entry Angel	915-4	February 2002
915-3	Turning Radius (R)	915-5	February 2002
915-4	Deflection	915-8	February 2002
915-5	Stopping Sight Distance for Roundabouts	915-10	February 2002
915-6	Roundabout Categories Design Characteristics	915-16	February 2002
915-7	Approximate Entry Capacity	915-17	February 2002
915-8a	Deflection Path	915-18	February 2002
915-8b	Deflection Path	915-19	February 2002
915-9	Deflection Path Radius	915-20	February 2002
915-10	Entry and Exit	915-21	February 2002
915-11	Path Overlap	915-22	February 2002
915-12	Roundabout Intersection Sight Distance	915-23	February 2002
915-13	Central Island	915-24	February 2002
915-14	Splitter Island	915-25	February 2002
915-15	Shared Use Sidewalk	915-26	February 2002
915-16	Roundabouts Signing	915-27	February 2002
915-17	Roundabouts Pavement Marking	915-28	February 2002
915-18	Roundabouts Illumination	915-29	February 2002
920-1	Road Approach Design Templates	920-3	April 1998
920-2	Minimum Corner Clearance	920-4	April 1998
920-3	Noncommercial Approach Design Template A	920-5	November 1999
920-4	Noncommercial Approach Design Template B and C	920-6	November 1999
920-5	Commercial Approach — Single Approach Design Template D	920-7	April 1998
920-6	Road Approach Sight Distance	920-8	May 2001
920-7	Road Approach Spacing and Corner Clearance	920-9	May 2001
930-1 M	Sight Distance at Railroad Crossing	930-4	March 1994
930-2	Guidelines for Railroad Crossing Protection	930-5	June 1989
930-3 M	Typical Pullout Lane at Railroad Crossing	930-6	March 1994
930-4 M	Railroad Crossing Plan for Washington Utilities and Transportation Commission	930-7	March 1994
930-5 M	Longitudinal Easement Cross Sections	930-8	March 1994
930-1	Sight Distance at Railroad Crossing	930-9	March 1994

Figure Number	Title	Page	Last Date
930-3	Typical Pullout Lane at Railroad Crossing	930-10	March 1994
930-4	Railroad Crossing Plan for Washington Utilities and Transportation Commission	930-11	March 1994
930-5	Longitudinal Easement Cross Sections	930-12	March 1994
940-1	Ramp Design Speed	940-4	May 2001
940-2	Maximum Ramp Grade	940-5	May 2000
940-3	Ramp Widths	940-5	May 2000
940-4	Basic Interchange Patterns	940-11	June 1999
940-5	Minimum Ramp Terminal Spacing	940-12	June 1999
940-6a	Lane Balance	940-13	June 1999
940-6b	Lane Balance	940-14	June 1999
940-7	Main Line Lane Reduction Alternatives	940-15	May 2000
940-8	Acceleration Lane Length	940-16	June 1999
940-9a	On-Connection (Single-Lane, Taper Type)	940-17	May 2000
940-9b	On-Connection (Single-Lane, Parallel Type)	940-18	May 2000
940-9c	On-Connection (Two-Lane, Parallel Type)	940-19	May 2000
940-9d	On-Connection (Two-Lane, Taper Type)	940-20	May 2000
940-10	Deceleration Lane Length	940-21	June 1999
940-11	Gore Area Characteristics	940-22	June 1999
940-12a	Off-Connection (Single Lane, Taper Type)	940-23	May 2000
940-12b	Off-Connection (Single Lane, Parallel Type)	940-24	May 2000
940-12c	Off-Connection (Single-Lane, One Lane Reduction	940-25	May 2000
940-12d	Off-Connection (Two-Lane, Taper Type)	940-26	May 2000
940-12e	Off-Connection (Two-Lane, Parallel Type)	940-27	May 2000
940-13a	Collector Distributor (Outer Separations)	940-28	May 2000
940-13b	Collector Distributor (Off-Connections)	940-29	May 2000
940-13c	Collector Distributor (On-Connections)	940-30	May 2000
940-14	Loop Ramps Connections	940-31	May 2000
940-15	Length of Weaving Sections	940-32	May 2000
940-16	Temporary Ramps	940-33	June 1999
940-17	Interchange Plan	940-34	June 1999
1010-1	Rolling Resistance	1010-4	November 1999
1010-2a	Performance for Heavy Trucks	1010-6	November 1999
1010-2b	Speed Reduction Example	1010-7	November 1999
1010-3	Level of Service — Multilane	1010-8	May 2001
1010-4	Auxiliary Climbing Lane	1010-9	November 1999
1010-5	Warrant for Passing Lanes	1010-10	November 1999
1010-6	Auxiliary Passing Lane	1010-11	November 1999
1010-7	Slow Moving Vehicle Turnout	1010-12	November 1999
1010-8	Typical Emergency Escape Ramp	1010-13	November 1999
1010-9	Chain-Up/Chain-Off Area	1010-14	November 1999
1020-1	Shared Use Path	1020-3	May 2001
1020-2	Bike Lane	1020-4	May 2001
1020-3	Shared Roadway	1020-4	May 2001
1020-4	Signed Shared Roadway (Designated Bike Route)	1020-5	May 2001
1020-5	Obstruction Marking	1020-8	May 2001

Figure Number	Title	Page	Last Date
1020-6	Midblock Type Shared Use Path Crossing	1020-9	May 2001
1020-7	Typical Redesign of a Diagonal Midblock Crossing	1020-10	May 2001
1020-8	Adjacent Shared Use Path Intersection	1020-11	May 2001
1020-9	Railroad Crossing for Shared Used Path	1020-12	May 2001
1020-10	Bicycle Design Speeds	1020-13	May 2001
1020-11	Bikeway Curve Widening	1020-13	May 2001
1020-12	R Value and Subsurfacing Needs	1020-14	May 2001
1020-13	Two-Way Shared Use Path on Separate Right of Way	1020-18	May 2001
1020-14	Two-Way Shared Use Path Adjacent to Roadway	1020-19	May 2001
1020-15	Typical Bike Lane Cross Sections	1020-20	May 2001
1020-16	Bikeways on Highway Bridges	1020-21	May 2001
1020-17	Refuge Area	1020-22	May 2001
1020-18	At-Grade Railroad Crossings	1020-23	May 2001
1020-19	Stopping Sight Distance	1020-24	May 2001
1020-20	Sight Distance for Crest Vertical Curves	1020-25	May 2001
1020-21	Lateral Clearance on Horizontal Curves	1020-26	May 2001
1020-22	Typical Bicycle/Auto Movements at Intersections of Multilane Streets	1020-27	May 2001
1020-23a	Bicycle Crossing of Interchange Ramp	1020-28	May 2001
1020-23b	Bicycle Crossing of Interchange Ramp	1020-29	May 2001
1020-24	Bike Lanes Approaching Motorists' Right-Turn-Only Lanes	1020-30	May 2001
1020-25	Typical Pavement Marking for Bike Lane on Two-Way Street	1020-31	May 2001
1020-26	Typical Bike Lane Pavement Markings at T-Intersections	1020-32	May 2001
1025-1	Trail Width and Grades	1025-5	May 2001
1025-2a	Pedestrian Walkways	1025-10	May 2001
1025-2b	Pedestrian Walkways	1025-11	May 2001
1025-3	Sidewalk Recommendations	1025-12	May 2001
1025-4	Marked Crosswalk Recommendations at Unsignalized Pedestrian Crossings	1025-13	May 2001
1025-5	Crosswalk Locations	1025-14	May 2001
1025-6a	Sight Distance at Intersections	1025-15	May 2001
1025-6b	Sight Distance at Intersections	1025-16	May 2001
1025-7	Sidewalk Bulb Outs	1025-17	May 2001
1025-8	Midblock Pedestrian Crossing	1025-18	May 2001
1025-9	Sidewalk Ramp Drainage	1025-19	May 2001
1030-1	Typical Truck Storage	1030-3	November 1999
1030-2	Typical Single RV Dump Station Layout	1030-4	November 1999
1030-3	Typical Two RV Dump Station Layout	1030-5	November 1999
1040-1	Truck Weigh Site (Multilane Highway)	1040-6	May 2000
1040-2	Truck Weigh Site (Two Lane Highway)	1040-7	May 2000
1040-3	Vehicle Inspection Installation	1040-8	May 2000
1040-4	Minor Portable Scale Site	1040-9	May 2000
1040-5	Major Portable Scale Site	1040-10	May 2000
1040-6	Small shoulder Site	1040-11	May 2000
1040-7	Large Shoulder Site	1040-12	May 2000
1040-8a	MOU Related to Vehicle Weighing and Equipment Inspection Facilities on State Highways	1040-13	May 2000
1040-8b	MOU Related to Vehicle Weighing and Equipment		

Figure Number	Title	Page	Last Date
	Inspection Facilities on State Highways	1040-14	May 2000
1040-8c	MOU Related to Vehicle Weighing and Equipment		
	Inspection Facilities on State Highways	1040-15	May 2000
	Inspection Facilities on State Highways	1040-16	May 2000
1040-8e	MOU Related to Vehicle Weighing and Equipment		
	Inspection Facilities on State Highways	1040-17	May 2000
1050-1 M	Typical Concurrent Flow Lanes	1050-11	June 1995
1050-2 M	Roadway Widths for Three-Lane HOV On and Off Ramps	1050-12	June 1995
1050-3a M	Separated Roadway Single-Lane, One-Way or Reversible	1050-13	June 1995
1050-3b M	Separated Roadway Multi-Lane, One-Way or Reversible	1050-14	June 1995
1050-4a M	Single-Lane Ramp Meter With HOV Bypass	1050-15	June 1995
1050-4b M	Two-Lane Ramp Meter With HOV Bypass	1050-16	June 1995
1050-5a M	Typical HOV Flyover	1050-17	June 1995
1050-5b M	Typical Inside Lane On Ramp	1050-18	June 1995
1050-5c M	Inside Single-Lane On Ramp	1050-19	June 1995
1050-6 M	Typical Slip Ramp	1050-20	June 1995
1050-7a M	Enforcement Area (One Direction Only)	1050-21	June 1995
1050-7b M	Median Enforcement Area	1050-22	June 1995
1050-7c M	Bidirectional Observation Point	1050-23	June 1995
1050-1	Typical Concurrent Flow Lanes	1050-24	June 1995
1050-2	Roadway Widths for Three-Lane HOV On and Off Ramps	1050-25	June 1995
1050-3a	Separated Roadway Single-Lane, One-Way or Reversible	1050-26	June 1995
1050-3b	Separated Roadway Multi-Lane, One-Way or Reversible	1050-27	June 1995
1050-4a	Single-Lane Ramp Meter With HOV Bypass	1050-28	June 1995
1050-4b	Two-Lane Ramp Meter With HOV Bypass	1050-29	June 19951040-8d
MOU Related to Vehicle Weighing and Equipment			
1050-5a	Typical HOV Flyover	1050-30	June 1995
1050-5b	Typical Inside Lane On Ramp	1050-31	June 1995
1050-5c	Inside Single-Lane On Ramp	1050-32	June 1995
1050-6	Typical Slip Ramp	1050-33	June 1995
1050-7a	Enforcement Area (One Direction Only)	1050-34	June 1995
1050-7b	Median Enforcement Area	1050-35	June 1995
1050-7c	Bidirectional Observation Point	1050-36	June 1995
1060-1 M	Bus Berth Design	1060-14	March 1994
1060-2	Transit Center Sawtooth Bus Berth Design Example	1060-15	December 1991
1060-3 M	Bus Turnout Transfer Center	1060-16	March 1994
1060-4 M	Off-Street Transfer Center	1060-17	March 1994
1060-5 M	Minimum Bus Zone Dimensions	1060-18	March 1994
1060-6	Bus Stop Pullouts, Arterial Streets	1060-19	November 1997
1060-7 M	Minimum Bus Zone and Pullout after Right Turn		
	Dimensions	1060-20	March 1994
1060-8 M	Shelter Siting	1060-21	March 1994
1060-9 M	Typical Bus Shelter Design	1060-22	March 1994
1060-10 M	Design Vehicle Turning Movements	1060-23	July 1994
1060-11 M	Turning Template for Articulated Bus	1060-24	July 1994
1060-12 M	Intersection Design	1060-25	March 1994

Figure Number	Title	Page	Last Date
1060-13 M	Cross-Street Width Occupied by Turning Vehicle for Various Angles of Intersection and Curb Radii	1060-26	March 1994
1060-1	Bus Berth Design	1060-27	March 1994
1060-3	Bus Turnout Transfer Center	1060-28	March 1994
1060-4	Off-Street Transfer Center	1060-29	March 1994
1060-5	Minimum Bus Zone Dimensions	1060-30	March 1994
1060-6	Bus Stop Pullouts, Arterial Streets	1060-31	March 1994
1060-7	Minimum Bus Zone and Pullout after Right Turn Dimensions	1060-32	March 1994
1060-8	Shelter Siting	1060-33	March 1994
1060-9	Typical Bus Shelter Design	1060-34	March 1994
1060-10	Design Vehicle Turning Movements	1060-35	July 1994
1060-11	Turning Template for Articulated Bus	1060-36	July 1994
1060-12	Intersection Design	1060-37	March 1994
1060-13	Cross-Street Width Occupied by Turning Vehicle for Various Angles of Intersection and Curb Radii	1060-38	March 1994
1110-1	Bridge Site Data Check List	1110-5	November 1999
1120-1a	Railroad Vertical Clearance — New Bridge Construction	1120-5	May 2000
1120-1b	Railroad Vertical Clearance — Existing Bridge Modifications	1120-6	May 2000
1130-1a	Typical Mechanically Stabilized Earth Gravity Walls	1130-22	December 1998
1130-1b	Typical Prefabricated Modular Gravity Walls	1130-23	December 1998
1130-1c	Typical Rigid Gravity, Semigravity Cantilever, Nongravity Cantilever, and Anchored Walls	1130-24	December 1998
1130-1d	Typical Rockery and Reinforced Slope	1130-25	December 1998
1130-2	MSE Wall Drainage Detail	1130-26	December 1998
1130-3	Retaining Walls With Traffic Barriers	1130-27	December 1998
1130-4a	Retaining Wall Design Process	1130-28	December 1998
1130-4b	Retaining Wall Design Process — Proprietary	1130-29	December 1998
1130-5	Retaining Wall Bearing Pressure	1130-30	December 1998
1140-1	Standard Noise Wall Types	1140-3	December 1998
1410-1	Appraisal and Acquisition	1410-6	June 1999
1420-1a	Full Access Control Criteria	1420-10	June 1989
1420-1b M	Access Control for Typical Interchange	1420-11	March 1994
1420-1c M	Access Control at Ramp Termination	1420-12	March 1994
1420-2a	Partial Access Control Criteria	1420-13	March 1994
1420-2b M	Access Control for Intersection at Grade	1420-14	March 1994
1420-3 M	Access Control Limits at Intersections	1420-15	March 1994
1420-1b	Access Control for Typical Interchange	1420-17	March 1994
1420-1c	Access Control at Ramp Termination	1420-18	March 1994
1420-2a	Partial Access Control Criteria	1420-19	March 1994
1420-2b	Access Control for Intersection at Grade	1420-20	March 1994
1420-3	Access Control Limits at Intersections	1420-21	March 1994
1425-1a	Access Point Decision Report Content and Review Levels	1425-11	May 2000
1425-1b	Access Point Decision Report Content and Review Levels	1425-12	May 2000

Figure Number	Title	Page	Last Date
1425-2	Access Point Decision Report Possibly Not Required	1425-13	May 2000
1425-3a	Access Point Decision Report Flow Chart	1425-14	May 2000
1425-3b	Access Point Decision Report Flow Chart	1425-15	May 2000
1430-1	Access Report Plan	1430-4	June 1989
1430-2	Access Hearing Plan	1430-5	June 1989
1440-1a	Interagency Agreement	1440-4	June 1999
1440-1b	Interagency Agreement	1440-5	June 1999
1450-1	Monument Documentation Summary	1450-4	May 2001
1450-2a	DNR Permit Application	1450-5	May 2001
1450-2b	DNR Completion Record Form	1450-6	May 2001
1450-3a	Land Corner Record	1450-7	May 2001
1450-3b	Land Corner Record	1450-8	May 2001

5:P65:DP/DME

325 Design Matrix Procedures

325.01 General
325.02 Terminology
325.03 Design Matrix Procedures
325.04 Selecting a Design Matrix
325.05 Project Type
325.06 Using a Design Matrix

325.01 General

This highway *Design Manual* provides guidance for three levels of design for highway projects: the basic, modified, and full design levels. The design matrices in this chapter are used to identify the design level(s) for a project and the associated processes and approval authority for allowing design variances. The matrices address the majority of preservation and improvement projects and focus on those design elements that are of greatest concern in project development.

The design matrices are five tables that are identified by route type. Two of the matrices apply to Interstate highways. The other three matrices apply to preservation and improvement projects on non-Interstate highways.

325.02 Terminology

The **National Highway System (NHS)** consists of highways designated as a part of the Interstate System, other urban and rural principal arterials, and highways that provide motor vehicle access to facilities such as a major port, airport, public transportation facility, or other intermodal transportation facility. The NHS includes a highway network that is important to the United States strategic defense policy and provides defense access, continuity, and emergency capabilities for the movement of personnel, materials, and equipment during times of war and peace. It also includes major network connectors that provide motor vehicle access between major military installations and other highways that are part of the strategic highway network.

The **Preventive Maintenance** mentioned under project type on Interstate Design Matrices 1 and 2 includes roadway work such as pavement patching; restoration of drainage system; panel replacement; joint and shoulder repair; and bridge work such as crack sealing, joint repair, seismic retrofit, scour countermeasures and painting. Preventive maintenance projects must not degrade any existing safety or geometric aspects of the facility.

In Design Matrices 1 and 2 and in Figure 330-1, the term ***New/Reconstruction*** includes the following types of work:

- Capacity changes: add a through lane, convert a general purpose (GP) lane to a special purpose lane (such as an HOV lane), or convert a high occupancy vehicle (HOV) lane to GP.
- Other lane changes: add or eliminate a collector-distributor or auxiliary lane. (A rural truck climbing lane that, for its entire length, meets the warrants in Chapter 1010 isnot considered new/reconstruction.)
- Pavement reconstruction: full depth PCC or AC pavement replacement.
- New interchange
- Changes in interchange type such as diamond to directional
- New or replacement bridge (main line)

The **HAL, HAC, PAL, and Risk location** mentioned in the notes on Design Matrices 3, 4, and 5 are high accident locations (HAL), high accident corridors (HAC), pedestrian accident locations (PAL), and locations that have a high probability of run-off-the-road accidents based onexisting geometrics (Risk).

The **Non-Interstate Freeway** mentioned on Design Matrices 3, 4, and 5 is multilane, divided highway with full access control.

The **Master Plan for Access Control** mentioned in the notes on Design Matrices 3, 4, and 5 is available from the Olympia Service Center, Design Office, Access and Hearings Unit.

The **corridor or project analysis** mentioned in notes 2 and 4 (on Design Matrices 3, 4, and 5) isthe justification needed to support a change

indesign level from the indicated level. The analysis can be based on route continuity, and other existing features, as well as the recommendations for future improvements in an approved Route Development Plan. See Chapter 330 for a sample project analysis.

(1) Project Types

Diamond Grinding is grinding a concrete pavement to remove surface wear or joint faulting.

Milling with AC Inlays is removal of a specified thickness of asphalt surfacing, typically from the traveled lanes, and then overlaying with asphalt concrete at the same specified thickness.

Nonstructural Overlay is an asphalt concrete pavement overlay that is placed to minimize the aging effects and minor surface irregularities of the existing asphalt concrete pavement structure. The existing pavement structure is not showing extensive signs of fatigue (longitudinal or alligator cracking in the wheel paths). Nonstructural overlays are typically less than 0.13 ft thick.

AC Structural Overlay is an asphalt concrete pavement overlay that is placed to increase the load carrying ability of the pavement structure. Structural overlay thickness is greater than or equal to 0.13 ft.

PCC Overlay is a Portland cement concrete pavement overlay of an existing PCC or ACpavement.

Dowel Bar Retrofit is re-establishing the load transfer efficiencies of the existing concrete jointsand transverse cracks by the cutting of slots, placement of epoxy coated dowel bars, andplacement of high-early strength, non-shrinkconcrete.

Bridge Deck Rehabilitation is repair of any delaminated concrete bridge deck and adding aprotective overlay that will prevent further corrosion of the reinforcing steel.

Safety, All Others includes collision reduction, collision prevention, channelization, and signalization projects.

Safety, At Grade is a project on a multilane highway to build grade separation facilities that replace the existing intersection.

Bridge Restriction projects are listed under economic development because these bridges do not have any structural problems. However, if the vertical or load capacity restrictions are removed, then it will benefit the movement of commerce.

(2) Design Elements

The following elements are shown on the Design Matrices. If the full design level applies, see thechapters listed below. If basic design level applies, see Chapter410. If the modified design level applies, see Chapter430.

Horizontal Alignment is the horizontal attributes of the roadway including horizontal curvature, superelevation, and stopping sight distance; all based on design speed. (See Chapter 620 for horizontal alignment, Chapter 640 for superelevation, Chapter 650 for stopping sight distance, and Chapter 440 for design speed.)

Vertical Alignment is the vertical attributes of the roadway including vertical curvature, profile grades, and stopping sight distance; all based on design speed. (See Chapter 630 for vertical alignment, Chapters 440 and 630 for grades, Chapter 650 for stopping sight distance, and Chapter 440 for design speed.)

Lane Width is the distance between lane lines. (See Chapter 640.)

Shoulder Width is the distance between the outside or inside edge line and the edge of in-slope, or face of barrier. (See Chapter 640.)

Lane and Shoulder Taper (pavement transitions) are the rate and length of transition ofchanges in width of roadway surface. (See Chapters 440 and 620.)

Median Width is the distance between inside edge lines. (See Chapters 440 and 640.)

Cross Slope, Lane is the rate of elevation change across a lane. This element includes the algebraic difference in cross slope between adjacent lanes. (See Chapter 640.)

Cross Slope, Shoulder is the rate of elevation change across a shoulder. (See Chapter 640.)

On/Off Connection is the widened portion of themain line beyond the ramp terminal. (See Chapter 940.)

Fill/Ditch Slope is downward slope from edge of shoulder to bottom of ditch or catch. (See Chapter 640.)

Access is means of entering or leaving a public street or highway from an abutting private property or another public street or highway. (See Chapter 1420.)

Clear Zone is the total roadside border area, starting at the edge of the traveled way, available for use by errant vehicles. This area may consist of a shoulder, a recoverable slope, a nonrecoverable slope, and/or a clear run-out area. (See Chapter 700.)

Signing, Delineation, Illumination are signs, guide posts, pavement markings, and lighting. (See Chapter 820 for signing, Chapter 830 for delineation, and Chapter 840 for illumination.)

Basic Safety is the safety items listed in Chapter 410.

Bridge Lane Width is the distance between lane lines on a structure. (See Chapters 440, 640 and 1120.)

Bicycle and Pedestrian See Chapter 1020, Bicycle Facilities, and Chapter 1025, Pedestrian Design Considerations, for definitions.

Bridge Shoulder Width is the distance between outside or inside edge line and face of curb or barrier, whichever is less. (See Chapters 440, 640 and 1120.)

Bridge Vertical Clearance is the minimum height between the roadway including shoulder and an overhead obstruction. (See Chapter 1120.)

Bridge Structural Capacity is the load bearing ability of a structure. (See Chapters 440 and 1120.)

Intersections Turning Radii See Chapter 910 for definition.

Intersections Angle See Chapter 910 for definition.

Intersections Sight Distance See Chapter 910 for definition.

Barriers Terminals and Transitions Section — **Terminals** are crashworthy end treatment for longitudinal barriers that is designed to reduce the potential for spearing, vaulting, rolling, or excessive deceleration of impacting vehicles from either direction of travel. Impact attenuators are considered terminals and beam guardrail terminals include anchorage. — **Transitions** are sections of barriers used to produce a gradual stiffening of a flexible or semi-rigid barrier as it connects to a more rigid barrier or fixed objects. (See Chapter 710 and 720.)

Barriers Standard Run are guardrail and other barriers excluding terminals, transitions, attenuators, and bridge rails. (See Chapter 710.)

Barriers Bridge Rail is barrier on a bridge excluding transitions. (See Chapter 710.)

325.03 Design Matrix Procedures

When scoping, or designing a project, the following steps are used to select and apply the design matrix. Each step is further explained in this chapter.

- *Select a design matrix* by identifying the route: Interstate, NHS, or non-NHS
- Within the design matrix: for Matrices 1 and 2 *select the row* by the type of work and for Matrices 3, 4 and 5 *select the row* by identifying the project type
- *Use the design matrix* to determine the design level for the design elements of the project. Apply the appropriate design levels and document the design decisions as required by this chapter and Chapter 330.

325.04 Selecting a Design Matrix

Selection of a design matrix is based on highway system (Interstate, non-NHS and other NHS) and location (main line, interchange). (See Figure 325-1.) Figures 325-2a and 2b provide a list of NHS highways in the state of Washington. The design matrices are shown in Figures 325-4 through 325-8. Follow *Design Manual* guidance for all projects except as noted in the design matrices and elsewhere as applicable.

Route	Project	
	Main Line	Interchange Area
Interstate	Matrix 1	Matrix 2
NHS	Matrix 3	Matrix 4
Non-NHS	Matrix 5	Matrix 4

Design Matrix Selection Guide
Figure 325-1

325.05 Project Type

In the design matrices, row selection is based on project type or type of work. The Project Summary defines and describes the project. (Project Summary is discussed in Chapter 330.) For non-NHS and NHS routes, the project's program/subprogram might be sufficient information for identifying project type.

For project types not listed in the design matrices, consult the OSC Design Office for guidance.

See Figures 325-3a through 3c for program and subprogram titles and definitions. The various sources of funds for these subprograms carry eligibility requirements that the designers and program managers must identify and monitor throughout project development — especially if the type of work changes — to ensure accuracy when writing agreements and to avoid delaying advertisement for bids.

Some projects involve work from several subprograms. In such cases, identify the various limits of the project that apply to each subprogram. Where the project limits overlap, apply the higher design level to the overlapping portion.

325.06 Using a Design Matrix

The column headings on a design matrix are **design elements.** They are based on the following thirteen FHWA controlling design criteria: design speed, lane width, shoulder width, bridge width, structural capacity, horizontal alignment, vertical alignment, grade, stopping sight distance, cross slope, superelevation, vertical clearance, and horizontal clearance. For the column headings, some of these controlling criteria have been combined (for example, design speed is part of horizontal and vertical alignment).

For Improvement type projects, full design level applies to all design elements except as noted in design matrices and in *Design Manual* chapters as applicable.

A **blank cell** on a design matrix signifies that the design element will not be addressed because it is beyond the scope of the project.

(1) Design Levels

In the Interstate matrices, full design level applies unless otherwise noted.

In the non-Interstate matrices, design levels are noted in the cells by B, M, F, and a number corresponding to a footnote on the matrix.

The design levels of basic, modified, and full (B, M, and F) were used to develop the design matrices. Each design level is based on the investment intended for the route type and type of work. (For example, the investment is higher for Interstate reconstruction than for an overlay on a non-NHS route.)

Basic design level (B) preserves pavement structures, extends pavement service life, and maintains safe operations of the highway. See Chapter 410.

Modified design level (M) preserves and improves existing roadway geometrics, safety, and operational elements. See Chapter 430.

Full design level (F) improves roadway geometrics, safety, and operational elements. See Chapter 440 and other applicable *Design Manual* chapters for design guidance.

(2) Design Variances

Types of design variances are design exceptions (DE), evaluate upgrades (EU), and deviations.

Design exception (DE) in a matrix cell indicates an existing condition that is not standard, relative to the current design level. The condition will not be corrected unless a need has been identified in the Highway System Plan and prioritized in accordance with the programming

process. A design exception must be identified in the project documents but no further justification is required.

Evaluate upgrade (EU) in a matrix cell indicates that an existing nonstandard condition must be evaluated to determine the impacts and cost effectiveness of upgrading to the applicable design level. The decision whether or not to upgrade, and its analyses and justification, must be provided in the project documentation. See Chapter 330.

A **deviation** is required when an existing or proposed design element does not meet or exceed the applicable design level for the project and neither DE nor EU processing is indicated. Documentation of a deviation must contain justification and it must be approved at the appropriate approval level. The analyses and justification must be provided in the deviation request. See Chapter 330 for requirements.

P65:DP/DMM

State Route	NHS Route Description	Beginning SR MP	Begin ARM	Ending SR MP	End ARM
US 2	I-5 to Idaho State Line	0.00	0.00	334.51	326.64
US 2 Couplet	Everett Couplet	0.00	0.00	1.64	0.87
US 2 Couplet	Brown Street Couplet	287.45	0.00	288.08	0.63
US 2 Couplet	Division Street Couplet	289.19	0.00	290.72	1.53
SR 3	SR 101 to SR 104	0.00	0.00	60.02	59.81
SR 4	SR 101 to I-5	0.00	0.00	62.28	62.27
I-5	Oregon State Line to Canadian Border	0.00	0.00	276.56	276.62
SR 8	SR 12 to SR 101	0.00	0.00	20.67	20.67
SR 9	SR 546 to Canadian Border	93.61	93.52	98.17	98.08
SR 9 Spur	Sumas Spur	98.00	0.00	98.25	0.24
SR 11	I-5 to Alaskan Ferry Terminal	19.93	19.93	21.28	21.28
US 12	SR 101 to Idaho State Line	0.00	0.00	434.19	430.76
US 12 Couplet	Aberdeen Couplet	0.33	0.00	0.68	0.35
SR 14	I-5 to SR 97	0.00	0.00	101.02	100.93
SR 14 Spur	Maryhill Spur	100.66	0.00	101.05	0.39
SR 16	I-5 to SR 3	0.00	0.00	29.19	27.01
SR 16 Spur	SR 16 to SR 3	28.74	0.00	29.13	0.39
SR 17	SR 395 to I-90	7.43	0.00	50.89	43.40
SR 18	So. Federal Way Park & Ride to I-5	2.20B	0.00	0.00	0.53
SR 18	I-5 to I-90	0.00	0.53	27.91	28.41
SR 20	SR 101 to I-5	0.00	0.00	59.54	59.49
SR 20 Spur	SR 20 to San Juan Ferry	47.89	0.00	55.67	7.78
SR 22	SR 97 to I-82	0.70	0.00	4.00	3.31
SR 26	I-90 to US 195	0.00	0.00	133.53	133.61
SR 26 Spur	SR 26 to US 195	133.44	0.00	133.51	0.07
SR 28	SR 2 to SR 281	0.00B	0.00	29.77	33.91
I-82	I-90 to Oregon State Line	0.00	0.00	132.60	132.57
I-90	I-5 to Idaho State Line	1.94	0.00	299.82	297.52
I-90 Reverse Lane	Reversible lane	1.99	0.00	9.44	7.45
SR 96	McCollum Park and Ride to I-5	0.00	0.00	0.52	0.52
US 97	Oregon State Line to SR 22	0.00B	0.00	61.44	61.30
US 97	I-90 to Canadian Border	133.90	118.80	336.48	321.62
US 97 Couplet	Maryhill Couplet	2.59	0.00	2.68	0.09
US 97 Spur	SR 97 to SR 2 (Orondo)	213.36	0.00	213.62	0.26
US 97 Y	SR 970 to SR 97				
SR 99	188th to SeaTac Airport	18.35	14.70	18.77	15.12
SR 99	SR 509 to SR 104	26.04	22.40	43.60	39.84
US 101	Oregon State Line to SR 401	0.00	0.00	0.46	0.46
US 101	SR 4 to I-5	28.89	28.89	367.41	365.78
US 101 Couplet	Aberdeen Couplet	87.49	0.00	91.66	4.17
US 101 Couplet	Port Angeles Couplet	249.65	0.00	251.32	1.67
SR 104	SR 101 to I-5	0.20	0.00	29.67	29.14
SR 109	Pacific Beach Access	0.00	0.00	30.25	30.29
SR 125	Oregon State Line to SR 12	0.00	0.00	6.09	6.08
SR 125 Spur	SR 125 to SR 12	6.09	0.00	6.76	0.67
SR 127	SR 12 to SR 26	0.03	0.00	27.05	27.05
SR 128	SR 12 to Idaho State Line	0.00	0.00	2.30	2.30

NHS Highways in Washington

Figure 325-2a

State Route	NHS Route Description	Beginning SR MP	Begin ARM	Ending SR MP	End ARM
SR 166	Naval Fuel Depot	0.02	0.00	3.40	3.38
SR 167	I-5 to I-405	0.00	0.00	27.28	28.60
I-182	I-82 to US 395	0.00	0.00	15.19	15.19
US 195	Idaho State Line to I-90	0.00B	0.00	95.99	93.37
US 195 Spur	US 195 to Idaho State Line	0.06	0.00	0.60	0.54
I-205	Oregon State Line to I-5	26.59	0.00	37.16	10.57
SR 240	Hanford Access	30.63	28.86	34.87	33.10
SR 270	SR 195 to Idaho	0.00	0.00	9.89	9.89
SR 270	Pullman Couplet	2.67	0.00	2.90	0.23
SR 270	SR 195 Y Connection	0.00	0.00	0.38	0.38
SR 281	SR 28 to I-90	0.00	0.00	10.55	10.55
SR 281 Spur	SR 281 to I-90	2.65	0.00	4.34	1.69
SR 303	SR 3 to SR 304	0.00B	0.00	8.73	8.89
SR 304	SR 16 to Bremerton Ferry	0.00	0.00	3.51	3.24
SR 305	SR 3 to Winslow Ferry	0.02	0.00	13.52	13.50
SR 307	SR 305 to SR 104	0.00	0.00	5.25	5.25
SR 310	SR 3 to SR 304	0.00	0.00	1.84	1.84
US 395	Congressional High Priority Route	13.05	13.05	270.26	275.09
SR 401	SR 101 to SR 4	0.00	0.00	12.13	12.13
I-405	I-5 to I-5	0.00	0.00	30.32	30.30
SR 432	SR 4 to I-5	0.00	0.00	10.33	10.32
SR 433	Oregon State Line to SR 432	0.00	0.00	0.94	0.94
SR 500	I-5 to SR 503	0.00	0.00	5.96	5.96
SR 501	I-5 to Port of Vancouver	0.00	0.00	3.83	3.42
SR 502	I-5 to SR 503	0.00B	0.00	7.56	7.58
SR 503	SR 500 to SR 502	0.00	0.00	8.09	8.09
SR 509	SR 99 to 12th Place S	24.35B	26.13	29.83	33.11
SR 509	Pacific Ave. to Marine View Drive	0.22	1.44	3.20	4.42
SR 512	I-5 to SR 167	0.00	0.00	12.06	12.06
SR 513	Sandpoint Naval Air Station	0.00	0.00	3.35	3.35
SR 516	I-5 to SR 167	2.03	2.02	4.72	4.99
SR 518	I-5 to SR 509	0.00	0.00	3.81	3.42
SR 519	I-5 to Seattle Ferry Terminal	0.00	0.00	1.14	1.14
SR 520	I-5 to SR 202	0.00	0.00	12.83	12.82
SR 522	I-5 to SR 2	0.00	0.00	24.68	24.68
SR 524	Lynnwood Park and Ride to I-5	4.64	4.76	5.20	5.32
SR 524 Spur	Cedar Way Spur - Lynnwood Park and Ride to I-5	4.64	0.00	5.14	0.50
SR 525	I-5 to SR 20	0.00	0.00	30.49	30.72
SR 526	SR 525 to I-5	0.00	0.00	4.52	4.52
SR 529	Everett Homeport	0.00	0.00	2.20	2.20
SR 539	I-5 to Canadian Border	0.00	0.00	15.16	15.16
SR 543	I-5 to Canadian Border	0.00	0.00	1.09	1.09
SR 546	SR 539 to SR 9	0.00	0.00	8.02	8.02
I-705	I-5 to Schuster Parkway	0.00	0.00	1.50	1.50
SR 970	I-90 to SR 97	0.00	0.00	10.31	10.31
SR 970 Y	Y connection to US 97	0.00	0.00	0.10	0.10
This list provided by the Planning Office					

NHS Highways in Washington (continued)

Figure 325-2b

Highway Capital Preservation Program

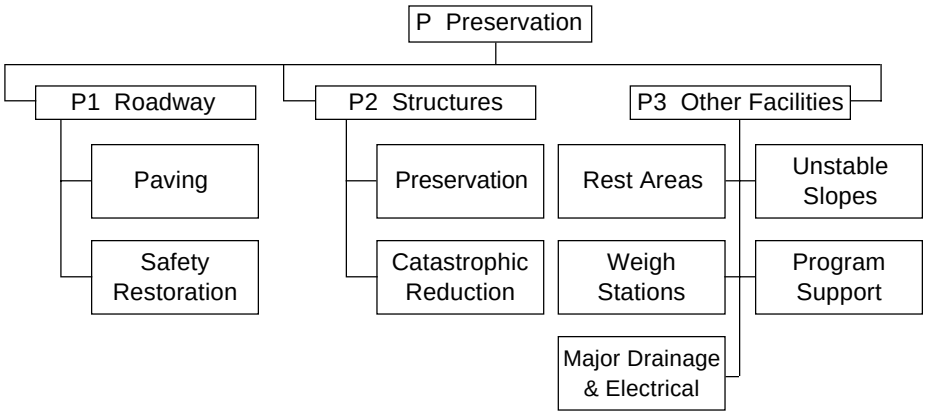

P **Preservation** — Preserve the highway infrastructure cost effectively to protect the public investment.

P1 Roadway

1. Repave highways at regular intervals to minimize long-term costs.
2. Restore existing safety features.

P2 Structures

1. Rehabilitate or replace existing bridges and other structures to preserve operational and structural integrity.
2. Reduce the risk of naturally caused catastrophic bridge failures.

P3 Other Facilities

1. Refurbish rest areas to extend service life and improve safety.
2. Construct weigh facilities to ensure enforcement across the entire highway system.
3. Refurbish electrical systems, electronics, and mechanical systems to extend service life andimprove safety. Rehabilitate or replace existing major drainage features to preserve operational and structural integrity.
4. Stabilize known unstable slopes.
5. The program support subcategory consists of critical construction support items that are required to maintain efficiency and ensure continued progress of the construction programs.

Paraphrased excerpt from the *State Highway System Plan*, State Highway System Plan Service Objectives and Action Strategies.

Preservation Program
Figure 325-3a

Highway Capital Improvement Program

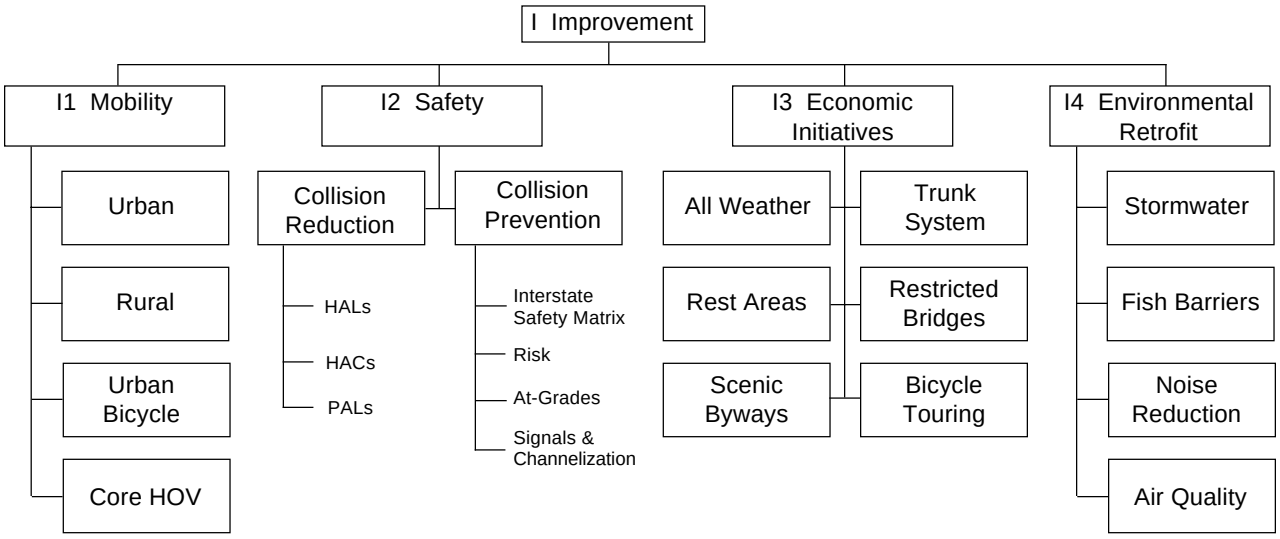

I Improvement

I1 Mobility — Improve mobility within congested highway corridors.

1. Mitigate congestion on urban highways in cooperation with local and regional jurisdictions when the peak period level of service falls below Level of Service D.
2. Provide uncongested condition (Level of Service C) on rural highways.
3. Provide bicycle connections along or across state highways within urban growth areas to complete local bicycle networks.
4. Complete the Freeway Core HOV Lane System in the Puget Sound region.
5. Provide uncongested conditions (Level of Service C) on high occupying vehicle (HOV) lanes.

I2 Safety — Provide the safest possible highways within available resources.

1. Improve highway sections that have a high accident history.
2. Improve geometrics of the Interstate System per the Federal Highway Administration (FHWA)/WSDOT Stewardship Agreement.
3. Improve roadways where geometrics, traffic volumes, and speed limits indicate a high accident potential.
4. Eliminate major at-grade intersections on multilane highways with speed limits of 45 mph orhigher.
5. Construct intersection channelization, signals, or both when traffic volume warrants (thresholds) are met.

Paraphrased excerpt from the *State Highway System Plan*, State Highway System Plan Service Objectives and Action Strategies.

Improvement Program
Figure 325-3b

I3 Economic Initiatives — Support efficient and reliable freight movement on state highways. Support tourism development and other Washington industries.

1. Upgrade state highways on the Freight and Goods Transportation System (FGTS) to have an all-weather surface capable of supporting legal loads year-round
2. Provide four-lane limited access facilities on a trunk system consisting of all FGTS highways with a T-1 classification (truck travel exceeding 10,000,000 tons per year).
3. Ensure public access to appropriately sized, rest room equipped facilities every 60 miles on the NHS and Scenic & Recreational (S & R) highways.
4. Where cost effective, replace or modify structures on the Interstate System with restricted vertical clearance.
5. Where cost effective, replace or modify structures that cannot carry legal overloads.
6. Cooperatively promote and interpret the heritage resources along S & R highways, including providing incentives for alternatives to outdoor advertising.
7. On rural bicycle touring routes, provide a minimum of 4 ft shoulders (structures are notincluded).

I4 Environmental Retrofit — Retrofit state highway facilities as appropriate to reduce existing environmental impacts.

1. Reconstruct storm water discharge facilities as opportunities arise.
2. Remove identified fish passage barriers.
3. Reduce the public's exposure to noise from state highway facilities where local land use authorities have adopted development regulations which reduce future exposure to excessive noise levels near highway facilities.
4. Implement the WSDOT Transportation Control Measures required by the Statewide Implementation Plan for Air Quality.

Paraphrased excerpt from the *State Highway System Plan,* State Highway System Plan Service Objectives and Action Strategies

Improvement Program (continued)
Figure 325-3c

⇩ Project Type																Bridges			Barriers		
Design Elements ⇨	Horiz. Align.	Vert. Align.	Lane Width	Shldr Width (13)	On/Off Conn't.	Median Width	Cross Slope Lane	Cross Slope Shldr	Fill/Ditch Slopes	Clear Zone	Sign. (10)	Delini. (9)	Illumin.	Vert. Clear. (11)	Bike & Ped.	Lane Width	Shldr Width	Structural Capacity	Term. & Trans. Section (12)	Std Run	Bridge Rail (14)
(1-1) Preventive Maintenance																					
Pavement Restoration																					
(1-2) Diamond Grinding										EU	EU	F		DE					F	EU	F
(1-3) Milling with ACP Inlays									EU	F	EU	F		DE					F	EU	F
(1-4) Nonstructural Overlay				DE			EU	EU	EU	F	EU	F		EU					F	F	F
Pavement Rehab./Resurf.																					
(1-5) ACP Structural Overlays	EU	DE	F	F	F	DE	F	EU	F	F	EU	F	F	F		F	DE		F	F	F
(1-6) PCCP Overlays	EU	DE	F	F	F	DE	F	EU	F	F	EU	F	F	F		F	DE		F	F	F
(1-7) Dowel Bar Retrofit	EU	DE	F	F	F	DE	DE		F	F	EU	F	F	DE			DE		F	F	F
Bridge Rehabilitation																					
(1-8) Bridge Deck Rehabilitation												F		F		F	DE	(11)	F (6)		F
Reconstruction (16)																					
(1-9) New/Reconstruction	F	F	F	F	F	F	F	F	F	F	F	F	F	F	F	F	F	F	F	F	F

☐ Not Applicable
F Full design level
M Modified design level. See Chapter 430.
DE Design Exception to full design level.
EU Evaluate Upgrade to full design level.

(6) Applies only to bridge end terminals and transition sections.
(9) Continuous shoulder rumble strips required in rural areas. See Chapter 700.
(10) See Chapter 820.
(11) See Chapter 1120.
(12) Impact attenuators are considered as terminals.
(13) See Chapter 440 and 640.
(14) Includes crossroad bridge rail.
(16) For design elements not in the matrix headings, apply full design level as found in the applicable *Design Manual* chapters.

English Version

Design Matrix 1
Interstate Routes (Main Line)
Figure 325-4

⇩ Project Type	Ramps and Collector Distributors																				Cross Road										
															Ramp Terminals			Barriers												Barriers		
Design Elements ⇨	Horiz. Align.	Vert. Align.	Lane Width	Shldr Width	Lane & Shldr. Taper	On/Off Conn't.	Cross Slope Lane	Cross Slope Shldr	Fill/ Ditch Slopes	Limited Access	Clear Zone	Vertical Clear. (11)	Sign., Del., Illumin.	Bike & Ped.	Turn Radii	Angle	I/S Sight Dist.	Term. & Trans. Section (12)	Std Run	Bridge Rail	Lane Width	Shldr Width	Vert. Clear.	Ped. & Bike	Limited Access	Fill/ Ditch Slopes	Clear Zone	Sign., Del., Illumin.	Term. & Trans. Section (12)	Std . Run	Bridge Rail
(2-1) Preventive Maintenance																															
Pavement Restoration																															
(2-2) Diamond Grinding											EU		F (15)					F	EU	F							EU	F (15)	F	EU	F
(2-3) Milling with ACP Inlays									EU		F	F	F (15)					F	F	F						EU	F	F (15)	F	F	F
(2-4) Nonstructural Overlay							EU	EU	EU		F	F	F (15)					F	F	F						EU	F	F (15)	F	F	F
Pavement Rehab./Resurf.																															
(2-5) ACP Structural Overlays	EU	DE	F	F	F	F	F	EU	F	F	F	F	F (15)		F	F	F	F	F	F	DE	DE	F	DE	F	DE	F	F (15)	F	F	F
(2-6) PCCP Overlays	EU	DE	F	F	F	F	F	EU	F	F	F	F	F (15)		F	F	F	F	F	F	DE	DE	F	DE	F	DE	F	F (15)	F	F	F
(2-7) Dowel Bar Retrofit	DE		DE	DE	F	F	DE		F	F	F	DE	F (15)		F	F	F	F	F	F					F			F (15)	F	F	F
Bridge Rehabilitation																															
(2-8) Bridge Deck Rehabilitation												F						F (6)		F			F						F (6)		F
Reconstruction (16)																															
(2-9) New/Reconstruction	F	F	F	F	F	F	F	F	F	F	F	F	F	F	F	F	F	F	F	F	F	F	F	F	F	F	F	F	F	F	F

☐ Not Applicable
F Full design level
M Modified design level. See Chapter 430.
DE Design Exception to full design level.
EU Evaluate Upgrade to full design level.

(6) Applies only to bridge end terminals and transition sections.
(10) See Chapter 820.
(11) See Chapter 1120.
(12) Impact attenuators are considered as terminals.
(15) EU for signing and illumination.
(16) For design elements not in the matrix headings, apply full design level as found in the applicable *Design Manual* chapters.

English Version

Design Matrix 2
Interstate Interchange Areas
Figure 325-5

⇩ Project Type																BRIDGES				INTERSECTIONS			BARRIERS		
Design Elements ⇨	Horiz. Align.	Vert. Align.	Lane Width	Shldr Width	Lane & Shldr Taper	Median Width	Cross Slope Lane	Cross Slope Shldr	On/Off Conn.	Fill/ Ditch Slopes	Access (3)	Clear Zone	Sign., Del., Illumin.	Basic Safety	Bike & Ped.	Lane Width	Shldr Width	Vertical Clear-ance	Structural Capacity	Turn Radii	Angle	Sight Dist.	Term. & Trans. Section (12)	Std Run	Bridge Rail
Preservation																									
Roadway																									
(3-1) Non-Interstate Freeway	DE/F	DE/F	DE/F	DE/F	DE/F	DE/F	DE/F	DE/F	DE/F	DE/F	DE/F		B	B		DE/F	DE/F	F					B	B	F
(3-2) ACP/PCCP/BST Overlays	DE/M	DE/M	DE/M	DE/M	DE/F	DE/M	DE/M	DE/M	DE/F	DE/M			B	B		DE/M	DE/M	F				B	B	B	F
(3-3) Repl. ACP w/ PCCP at I/S	DE/M	DE/M	EU/M	EU/M	DE/F	DE/M	EU/M	DE/M		DE/M			B	B		DE/M	DE/M	F				B	B	B	F
Structures																									
(3-4) Bridge Replacement	F (2)	F (2)	F (2)	F (2)	F	F (2)	F (2)	F (2)	F (2)	F (2)		F	F		F	F (2)	F (2)	F	F (11)	F (2)	F (2)	F	F	F	F
(3-5) Bridge Deck Rehab.													B	B				F					B (6)		F
Improvements (16)																									
Mobility																									
(3-6) Non-Interstate Freeway	F	F	F	F	F	F	F	F	F	F	F	F	F		F	F	F	F	F (11)	F	F	F	F	F	F
(3-7) Urban	F (2)	F (2)	F (2)	F (2)	F	F (2)	F (2)	F (2)	F (2)	F (2)	F	F	F		F	F (2)	F (2)	F	F (11)	F (2)	F (2)	F	F	F	F
(3-8) Rural	F (2)	F (2)	F (2)	F (2)	F	F (2)	F (2)	F (2)	F (2)	F (2)	F	F	F		F	F (2)	F (2)	F	F (11)	F (2)	F (2)	F	F	F	F
(3-9) HOV	F (2)	F (2)	F (2)	F (2)	F	F (2)	F (2)	F (2)	F (2)	F (2)	F	F	F		F	F (2)	F (2)	F	F (11)	F (2)	F (2)	F	F	F	F
(3-10) Bike/Ped. Connectivity	(5)	(5)	(5)	(5)	(5)		(5)	(5)		(5)	(5)	(5)	(5)		F	(5)	(5)	(5)	(5)	(5)	(5)	(5)	(5)	(5)	(5)
Safety																									
(3-11) Non-Interstate Freeway	F	F	F	F	F	F	F	F	F	F	F	F	F		F	F	F	F		F	F	F	F	F	F
(3-12) All Others (1)	M (4)	M (4)	M (4)	M (4)	F	M (4)	M (4)	M (4)	M (4)	M (4)	EU/F	F	F		F	M (4)	M (4)	F		M (4)	M (4)	F	F	F	F
Economic Development																									
(3-13) Freight & Goods (Frost Free) (8)	F (2)	F (2)	F (2)	F (2)	F	F (2)	F (2)	F (2)	F (2)	F (2)	EU/F	F	B		EU	DE/F	DE/F	F	F (11)	EU/F	EU/F	EU/F	F	F	F
(3-14) 4-Lane Trunk System	F	F	F	F	F	F	F	F	F	F	F	F	F		F	F	F	F	F (11)	F	F	F	F	F	F
(3-15) Rest Areas (New)	F	F	F	F	F	F	F	F	F	F	F	F	F		F	F	F	F	F (11)	F	F	F	F	F	F
(3-16) Bridge Restrictions	F (2)	F (2)	F (2)	F (2)	F	F (2)	F (2)	F (2)	F (2)	F (2)		F	F		EU	F (2)	F (2)	F	F (11)	F (2)	F (2)	F	F	F	F
(3-17) Bike Routes (Shldrs)			EU/M	(7)	EU/F			EU/M		EU/M			B	B	F	EU/M	EU/M	F				B	F	B	EU/F

☐ Not Applicable
F Full design level
M Modified design level. See Chapter 430.
B Basic design level. See Chapter 410
DE Design Exception
EU Evaluate Upgrade

(1) Collision Reduction (HAL, HAC, PAL), or Collision Prevention (Risk, At Grade Removal, Signalization & Channelization). Specific deficiencies that created the project must be upgraded to design level as stated in the matrix.
(2) Modified design level may apply based on a corridor or project analysis. See 325.02.
(3) If designated in Limited Access Master Plan apply limited access standards, if not access management standards apply. See Chapter 920.
(4) Full design level may apply based on a corridor or project analysis. See 325.02.
(5) For bike/pedestrian design see Chapters 1020 and 1025.
(6) Applies only to bridge end terminal and transition sections.
(7) 4 ft minimum shoulders.
(8) If all weather structure can be achieved with spot digouts and overlay, Modified Design Level Applies.
(11) See Chapter 1120.
(12) Impact attenuators are considered as terminals.
(16) For design elements not in the matrix headings, apply full design level as found in the applicable *Design Manual* chapters.

English Version

Design Matrix 3
NHS Routes (Main Line)
Figure 325-6

⇩ Project Type	Ramps and Collector Distributors																				Cross Road											
															Ramp Terminals			Barriers													Barriers		
Design Elements ⇨	Horiz. Align.	Vert. Align.	Lane Width	Shldr Width	Lane & Shldr. Taper	On/Off Conn.	Cross Slope Lane	Cross Slope Shldr	Fill/ Ditch Slopes	Access (3)	Clear Zone	Sign, Del., Illumin.	Basic Safety	Bike & Ped.	Turn Radii	Angle	I/S Sight Dist.	Term. & Trans. Section (12)	Std Run	Bridge Rail	Lane Width	Shldr Width	Vert. Clear.	Ped. & Bike	Access (3)	Sign., Del., Illumin.	Fill/ Ditch Slopes	Clear Zone	Basic Safety	Term. & Trans. Section (12)	Std . Run	Bridge Rail
Preservation																																
Roadway																																
(4-1) Non-Interstate Freeway	DE/F	DE/F	DE/F	DE/F	DE/F	DE/F	DE/F	DE/F	DE/F	DE/F		B	B		DE/F	DE/F	DE/F	B	B	F	DE/F	DE/F	F			B	DE/F		B	B	B	F
(4-2) ACP/PCCP/BST Overlays Ramps												B	B				B	B	B	F			F			B			B	B	B	F
Structures																																
(4-3) Bridge Replacement	F (2)	F (2)	F (2)	F (2)	F	F (2)	F (2)	F (2)	F (2)	F	F	F		F	F	F	F	F	F	F	F (2)	F (2)	F	F	F	F	F (2)	F		F	F	F
(4-4) Bridge Deck Rehab												B	B					B (6)		F			F			B			B	B (6)		F
Improvements (16)																																
Mobility																																
(4-5) Non-Interstate Freeway	F	F	F	F	F	F	F	F	F	F	F	F		F	F	F	F	F	F	F	F	F	F	F	F	F	F	F		F	F	F
(4-6) Urban	F (2)	F (2)	F (2)	F (2)	F	F (2)	F (2)	F (2)	F (2)	F	F	F		F	F (2)	F (2)	F	F	F	F	F (2)	F (2)	F	F	F	F	F (2)	F		F	F	F
(4-7) Rural	F (2)	F (2)	F (2)	F (2)	F	F (2)	F (2)	F (2)	F (2)	F	F	F		F	F (2)	F (2)	F	F	F	F	F (2)	F (2)	F	F	F	F	F (2)	F		F	F	F
(4-8) HOV By Pass	F (2)	F (2)	F (2)	F (2)	F	F (2)	F (2)	F (2)	F (2)	F	F	F		F	F (2)	F (2)	F	F	F	F	F (2)	F (2)	F	F	F	F	F (2)	F		F	F	F
(4-9) Bike/Ped. Connectivity	(5)	(5)	(5)	(5)	(5)		(5)	(5)	(5)	(5)	(5)	(5)		F	(5)	(5)	(5)	(5)	(5)	(5)	(5)	(5)	(5)	F		(5)	(5)			(5)	(5)	(5)
Safety																																
(4-10) Non-Interstate Freeway	F	F	F	F	F	F	F	F	F	F	F	F			F	F	F	F	F	F	F	F	F		F	F	F	F		F	F	F
(4-11) At Grade (1)	F (2)	F (2)	F (2)	F (2)	F	F (2)	F (2)	F (2)	F (2)	F	F	F		F	F (2)	F (2)	F	F	F	F	F (2)	F (2)	F	F	F	F	F (2)	F		F	F	F
(4-12) All Others (1)	M (4)	M (4)	M (4)	M (4)	F	M (4)	M (4)	M (4)	M (4)	EU/F	F	F			M (4)	M (4)	F	F	F	F	F (2)	F (2)	F		EU/F	F	M (4)	F		F	F	F
Economic Development																																
(4-13) Four-Lane Trunk Syster	F	F	F	F	F	F	F	F	F	F	F	F		F	F	F	F	F	F	F	F	F	F		F	F	F	F		F	F	F

☐ Not Applicable
F Full design level
M Modified design level. See Chapter 430.
B Basic design level. See Chapter 410.
DE Design Exception
EU Evaluate Upgrade

(1) Collision Reduction (HAL, HAC, PAL), or Collision Prevention (Risk, Signalization & Channelization). Specific deficiencies that created the project must be upgraded to design level as stated in matrix.
(2) Modified design level may apply based on a corridor or project analysis. See 325.02.
(3) If designated in limited access master plan apply limited access standards, if not access management standards apply. See Chapter 920.
(4) Full design level may apply based on a corridor or project analysis. See 325.02.
(5) For bike/pedestrian design see Chapters 1020 and 1025.
(6) Applies only to bridge end terminals and transition sections.
(7) 4 ft minimum shoulders.
(12) Impact attenuators are considered as terminals.
(16) For design elements not in the matrix headings, apply full design level as found in the applicable *Design Manual* chapters.

English Version

Design Matrix 4
Non-Interstate Interchange Areas
Figure 325-7

⇩ Project Type															Bridges				Intersections			Barriers		
Design Elements ⇨	Horiz. Align.	Vert. Align.	Lane Width	Shldr Width	Lane & Shldr Taper	Median Width	Cross Slope Lane	Cross Slope Shldr	Fill/ Ditch Slopes	Access (3)	Clear Zone	Sign, Del., Illumin.	Basic Safety	Bike & Ped.	Lane Width	Shldr Width	Vertical Clear.	Structural Capacity	Turn Radii	Angle	Sight Dist.	Term. & Trans. Section (12)	Std Run	Bridge Rail
Preservation																								
Roadway																								
(5-1) ACP/PCCP												B	B				F				B	B	B	F
(5-2) BST																								
(5-3) BST Routes/Basic Safety												B	B								B	B	B	F
(5-4) Replace ACP with PCCP at I/S			EU/M	EU/M		EU/M	EU/M					B	B				F					B	B	F
Structures																								
(5-5) Bridge Replacement	M	F	M	M	F		M	M	M		F	F		F	F (2)	F (2)	F	F (11)	M	M	F	F	F	F
(5-6) Bridge Repl. (Multi-Lane)	F (2)	F (2)	F (2)	F (2)	F	F (2)	F (2)	F (2)	F (2)		F	F		F	F (2)	F (2)	F	F (11)	F (2)	F (2)	F	F	F	F
(5-7) Bridge Deck Rehab												B	B									B (6)	F	F
Improvements (16)																								
Mobility																								
(5-8) Urban (Multilane)	F (2)	F (2)	F (2)	F (2)	F	F (2)	F (2)	F (2)	F (2)	F	F	F		F	F (2)	F (2)	F	F (11)	EU/F	EU/F	F	F	F	F
(5-9) Urban	M	M	M	M	F		M	M	M	F	F	F		F	M	M	F	F (11)	EU/M	EU/M	F	F	F	F
(5-10) Rural	M	M	M	M	F	M	M	M	M	F	F	F		F	M	M	F	F (11)	EU/M	EU/M	F	F	F	F
(5-11) HOV	M	M	M	M	F	M	M	M	M	F	F	F		F	M	M	F	F (11)	EU/M	EU/M	F	F	F	F
(5-12) Bike/Ped. Connectivity	(5)	(5)	(5)	(5)	(5)	(5)	(5)	(5)	(5)	(5)	(5)	(5)		F	(5)	(5)	(5)	(5)	(5)	(5)	(5)	(5)	(5)	(5)
Safety																								
(5-13) Non-Interstate Freeway	F (2)	F (2)	F (2)	F (2)	F (2)	F (2)	F (2)	F (2)	F (2)	F	F	F		F	F (2)	F (2)	F		F (2)	F (2)	F	F	F	F
(5-14) All Others (1)	EU/M	EU/M	EU/M	EU/M	EU/F	EU/M	EU/M	EU/M	EU/M	EU/F	F	EU/F		EU	EU/M	EU/M	EU/F		EU/M	EU/M	EU/F	F	F	EU/F
Economic Development																								
(5-15) Freight & Goods (Frost Free) (8)	EU/M	EU/M	EU/M	EU/M	EU/F	EU/M	M	M	EU/M		F	B	B	EU	EU/M	EU/M	F		EU/M	EU/M	EU/F	F	B	F
(5-16) Rest Areas (New)	F	F	F	F	F	F	F	F	F	F	F	F		F	F	F			F	F	F	F	F	F
(5-17) Bridge Restrictions	M	F	M	M	F	M	M	M	M		F	F		EU	M	M	F	F (11)	M	M	F	F	F	F
(5-18) Bike Routes (Shldrs)			EU/M	(7)	EU/F			EU/M	EU/M			B	B	F	EU/M	EU/M					B	F	B	EU/F

☐ Not Applicable
F Full design level
M Modified design level. See Chapter 430.
B Basic design level. See Chapter 410.
EU Evaluate Upgrade

(1) Collision Reduction (HAL, HAC, PAL), or Collision Prevention (Risk, Signalization & Channelization). Specific deficiencies that created the project must be upgraded to design level as stated in matrix.
(2) Modified design level may apply based on a corridor or project analysis. See 325.02.
(3) If designated in Limited Access Master Plan, apply limited access standards. If not, access management standards apply. See Chapter 920.
(5) For bike/pedestrian design see Chapters 1020 and 1025.
(6) Applies only to bridge ends terminal and transition sections.
(7) 4 ft minimum shoulders.
(8) If all weather structure can be achieved with spot digouts and overlay, basic design level applies. See Chapter 820.
(11) See Chapter 1120.
(12) Impact attenuators are considered as terminals.
(16) For design elements not in the matrix headings, apply full design level as found in the applicable *Design Manual* chapters.

English Version

Design Matrix 5
Non-NHS Routes
Figure 325-8

340 Minor Operational Enhancement Projects

340.01 General
340.02 References
340.03 Definitions
340.04 Minor Operational Enhancement Matrix Procedures
340.05 Selecting a Minor Operational Enhancement Matrix
340.06 Project Type
340.07 Using a Minor Operational Enhancement Matrix
340.08 Project Approval
340.09 Documentation

340.01 General

This chapter complements Chapter 325 by providing guidance for development of minor operational enhancement projects. Refer to Chapter 325 for guidance in development of preservation and improvement projects. The minor operational enhancement matrices contained in this chapter identify the design level(s) for a project, the associated approval level, and the documentation requirements for the various project elements. These matrices address the most common minor operational enhancement projects and focus on the elements of greatest concern during project development.

Minor enhancement projects are often categorized as low-cost, quick-fixes to improve the operation of the highway system. These enhancements are most often installed by state forces through work orders, but may be accomplished through: a change order to an existing state contract, agreements with local agencies, a Q Program funded bid item within a larger improvement project, or a stand-alone state contract funded entirely through the Q Program. An important characteristic of these projects is the ability to quickly develop and implement them without a cumbersome approval process. Balanced with that is a need to apply consistency in design policies and guidelines in the development and approval processes. Therefore, the intent of this chapter is to clarify the design guidelines and documentation requirements for minor operational enhancement projects without unduly impeding the process.

The objective of the Q Program is to maximize highway transportation system safety and efficiency through a statewide program focused on the WSDOT business function for “Traffic Operations.” It is the smallest of the four major highway programs that comprise the Highway System Plan (i.e. Improvement, Maintenance, Preservation, and Traffic Operations). Elements within the Q Program include: Q1 - Management Support, Q2 - Operations and Low Cost Enhancements, and Q3 - Special Advanced Technology Projects. Large capital improvement projects developed for the Q3 subprogram are beyond the scope of this chapter. Normally, these projects are developed using *Design Manual* guidelines for Preservation and Improvement Program projects. Consult the Traffic Office for guidance when designing Q3 subprogram projects.

The minor operational enhancement matrices consisting of three tables are identified by route type. One of the matrices applies to Interstate and NHS freeways, one applies to NHS Nonfreeway routes, and the third matrix applies to Non-NHS routes.

340.02 References

Revised Code of Washington (RCW) 47.28.030, Contracts —State forces —Monetary limits —Small businesses, minority, and women contractors —Rules.

340.03 Definitions

The **National Highway System (NHS)** routes are identified in Chapter 325.

The term **freeway** applies to multilane, divided highways with full access control.

The **minor operational enhancement projects** usually originate from the Q2 component of the Q Program and are quick responses to implement low cost improvements. Some developer-funded improvements also fall into this category. Projects are typically narrow in scope, and focus

on improvements to traffic operations, and modifications to traffic control devices. Guidance on the type of work included in the Q subprograms is in the Chart of Accounts (M 13-02).

(1) Project Types

Regulatory projects include actions undertaken to manage or regulate traffic conflict, movements, and use of the roadway. Potential project types in this category include revisions to speed limits, parking restrictions, turn restrictions, truck restrictions, signal operations, unsignalized intersection control, intersection lane use control, ramp meters, no passing zones, crosswalks, special traffic control schemes, and lane use restrictions.

Driver guidance projects are actions to improve driver guidance, clarify options, or reduce hazard in the roadway setting. Potential project types include revisions to, informational signs, warning signs, lighting and supplemental illumination, supplemental delineation, glare screen, signals, roadside guidance, and intelligent transportation systems (ITS).

Pavement widening projects are expansion of the roadway surface for vehicular use and may involve earthwork, drainage, and paving elements. Potential project types are:

- Turn lane — Addition of a new channelized turn bay at an intersection.
- Pullout — Pavement widening to provide auxiliary highway uses including transit stops, Washington State Patrol (WSP) enforcement pullouts, snow chain-up areas, and maintenance vehicle turnouts.
- Expansion — Widen at intersection corners, lengthen existing channelized turn bay, widening shoulders, and flattening approach taper. This type of work is not anticipated for main line sections on Interstate freeways.
- Median crossover — Restricted-use median crossover on separated highways for emergency or maintenance use.

Rechannelize existing pavement projects alter the use of the roadway without additional widening. These projects may add, delete, or modify channelization features, and may include reduction of existing shoulder or lane widths. Potential project types are:

- Pavement markings — Develop added storage, additional lanes, or altered lane alignment. This work may modify tapers or radii, modify painted islands, channelize bicycle lanes, or preferential-use lanes or shoulders.
- Raised channelization — New or altered raised curbing to channelization islands to enhance guidance, curtail violation or misuse, or introduce access control.

Nonmotorized facilities projects add adjacent roadside features for bicycle or pedestrian use. Potential project types are:

- Sidewalk — Installation of sidewalks, which might involve preserving existing shoulder, or converting some portion of existing shoulder for use as a new sidewalk.
- Walkway — Adds to the existing roadway's overall width to provide a wider walk-able shoulder.
- Separated Trails — Class 1 separated bike lane or pedestrian paths on independent alignment or parallel to the highway.
- Spot Improvement — Installation of ADA sidewalk curb cuts, new pedestrian landings, sidewalk bulbs at intersections, or new or revised trailhead features.

Roadside projects are modifications to roadside features for safety purposes. Potential project types are:

- Cross section — Altering roadway cross sections to address clear zone hazard or sight distance concern such as slope flattening, recontour a ditch, closing a ditch with culvert, or removal of hazard.
- Protection — Installation of hazard protection for clear zone mitigation including guardrail, barrier, earth berm, and impact attenuator.
- New object — Placement of new hardware or fixed object within clear zone unable to meet breakaway criteria.

(2) Design Elements

The following elements are shown on the minor operational enhancement matrices. If full design level applies see the chapters listed below. If modified design level applies, see Chapter 430.

Sight Distance Refers to any combination of stopping sight distance, decision sight distance, passing sight distance, and intersection sight distance. See Chapters 650 and 910 for definitions and guidance.

Lane Width See Chapter 325 for definition.

Lane and Shoulder Taper See Chapter 325 for definition.

Shoulder Width See Chapter 325 for definition.

Fill/Ditch Slope See Chapter 325 for definition.

Clear Zone See Chapter 325 for definition.

Ramp Sight Distance Refers to any combination of stopping sight distance, decision sight distance, and intersection sight distance. See Chapters 650 and 910 for definitions and guidance.

Ramp Lane Width is the lane width for ramp alignments. See Lane Width definition.

Ramp Lane and Shoulder Taper is the lane and shoulder taper applied to a ramp alignment. See definition for Lane and Shoulder Taper. Also see Chapter 940.

Ramp Shoulder Width is the shoulder width for a ramp alignment. See Shoulder Width definition.

Ramp Fill/Ditch Slopes is the fill/ditch slope along a ramp alignment. See Fill/Ditch Slope definition in Chapter 325.

Ramp Clear Zone is the clear zone along a ramp alignment. See Clear Zone definition in Chapter 325.

Ramp Terminals or Intersections Turning Radii See Chapter 910 for definition.

Ramp Terminals or Intersections Angle See Chapter 910 for definition.

Ramp Terminals or Intersections Sight Distance See Chapter 910 for definition.

Pedestrian and Bike refers to the facilities along a route for accommodation of pedestrians and/or bicycles. See Chapter 1020 for bicycles and Chapter 1025 for pedestrians.

Crossroads at Ramps Lane Width is the lane width on a crossing alignment intersected by a ramp. See Lane Width definition.

Crossroads at Ramps Shoulder Width is the shoulder width on a crossing alignment intersected by a ramp. See Lane Width definition.

Crossroads at Ramps Pedestrian and Bike refers to the facilities on a crossing alignment intersected by a ramp, for accommodation of pedestrians and/or bicycles. See Pedestrian and Bike definition.

Crossroads at Ramps Fill/Ditch Slopes is the fill/ditch slope along a crossroad intersected by a ramp. See Fill/Ditch Slope definition.

Crossroads at Ramps Clear Zone is the clear zone along a crossroad intersected by a ramp. See Clear Zone definition.

Barriers Terminal and Transition Section See Chapter 325 for definition.

Barriers Standard Run See Chapter 325 for definition.

340.04 Minor Operational Enhancement Matrix Procedures

During project definition and design, the following steps are used to select and apply the appropriate minor operational enhancement matrix. Each step is further explained in this chapter.

- *Select a minor operational enhancement matrix* by identifying the route: Interstate/ NHS Freeway, NHS nonfreeway, or non-NHS.
- Within the minor operational enhancement matrix, *select the row* by the type of work.
- Use the minor operational enhancement matrix to *determine the documentation and approval levels for the various design elements* in the project. Apply the appropriate design levels and document the design

decisions as required by this chapter and Chapter 330.

340.05 Selecting a Minor Operational Enhancement Matrix

Selection of a minor operational enhancement matrix is based on highway system (Interstate/ NHS Freeway, NHS nonfreeway, Non-NHS). (See Figure 340-1.) Figures 325-2a and 2b provide a list of the NHS and the Interstate routes in Washington. The minor operational enhancement matrices are shown in Figures 340-2 through 340-4. Follow *Design Manual* guidance for all projects except as noted in the minor operational enhancement matrices.

Route	Project	
	Freeway	NonFreeway
Interstate	Matrix 1	
NHS	Matrix 1	Matrix 2
Non-NHS	Matrix 1	Matrix 3

Minor Operational Enhancement Matrix Selection Guide
Figure 340-1

340.06 Project Type

Row selection in the design matrices is based on project type or type of work. See 340.03(1). For projects not listed in the matrices, consult the OSC Traffic Office and the OSC Design Office.

Some projects might include work from several project types. In such cases, identify the design and approval level for each project element. In all cases, select the higher design level and approval level where overlaps are found.

340.07 Using a Minor Operational Enhancement Matrix

The column headings on a minor operational enhancement matrix are design elements. They are based on the following thirteen FHWA controlling design criteria: design speed, lane width, shoulder width, bridge width, structural capacity, horizontal alignment, vertical alignment, grade, stopping sight distance, cross slope, superelevation, vertical clearance, and horizontal clearance. For the column headings, some of the controlling criteria are combined (for example design speed is part of horizontal and vertical alignment).

Unlike the design matrices described in Chapter 325, designers using a minor operational enhancement matrix are not required to inventory deficiencies for elements not improved by the minor enhancement project. Similarly, they are not required to justify existing deficiencies not addressed by minor enhancement projects. In the case where improvements to existing features surpass the existing condition but do not meet the design guidelines, only Basic Documentation plus Supplemental Coordination (BD+) is required. See 340.09(1).

A **blank cell** on a minor operational enhancement matrix signifies that the design element is beyond the scope of the project and need not be addressed.

For work on ramps on Interstate or NHS freeway routes, there is a requirement to provide assurance of no adverse effect to main line flow. Provide FHWA a copy of the documentation providing assurance or process a deviation through FHWA if there is an adverse effect.

(1) Design Level

The minor operational enhancement matrices specify the appropriate design level for the various project elements. The design levels specified are Full and Modified.

Full design level (F) improves roadway geometrics, safety, and operational elements. See Chapter 440 and other applicable chapters for design guidance. Use the current traffic volume with Chapter 440 to evaluate Design Classification for Q Program projects.

Modified design level (M) preserves and improves existing roadway geometrics, safety, and operational elements. See Chapter 430.

Design levels specified in a matrix cell are supplemented with notations for design variances.

(2) Design Variances

Design variances are information packages that justify the introduction of features that are not in accordance with design guidelines. Variances specified in minor operational enhancement project cells include: Design Justification (DJ), Level 2 (2), Level 3 (3), or Level (4). See 340.09 for detail on documentation requirements.

340.08 Project Approval

Project approval for minor operational enhancement projects authorizes expenditures for the project. The state and/or region Traffic Engineer have the responsibility and authority to authorize all expenditures for Q2 Low Cost Enhancements. Delegation of design and/or expenditure approval authority for Q Program funded projects must be identified in writing from the appropriate Traffic Engineer to the person receiving the delegated authority. Such written delegation must identify the specific conditions for which approval authority has been delegated. Design approval authority for PS&E contracts cannot be delegated.

Mechanisms for project expenditure approval vary with the types of projects and the costs involved.

- **Minor-cost projects** are projects normally implemented by state forces directed through maintenance task orders, within the monetary limits established in RCW 47.28.030. Expenditure authority is granted by initialing the work order.
- **Mid-range projects** include: all contract change orders, local agency agreements, or Q Program bid items included in an Improvement or Preservation project, regardless of cost. Maintenance task orders exceeding the monetary limits established in RCW 47.28.030 are included in this category. Expenditure authority is granted by initialing the task order, change order, or agreement memo.
- **PS&E contracts** are stand-alone contracts funded through the Q Program for minor operational enhancement projects. A Design Summary/Approval memorandum must be prepared and signed by the region's Traffic Engineer to approve a project in this category. Figures 340-5a and 340-5b provide a template for the approval memo.

Project Development decisions and approvals for "Regulatory" and for "Driver Guidance" projects reside within region or OSC Traffic Offices. Projects impacting roadway geometric features in the "Pavement Widening," "Rechannelizing Existing Pavement," "Nonmotorized Facilities" or "Roadside" categories are developed jointly by the region's Traffic Office and the region's project Development Office. Depending on the route type, the approval authority may involve the Assistant State Design Engineer and the FHWA.

340.09 Documentation

The minor operational enhancement matrices include a column that specifies the documentation levels for each project type listed. The documentation levels are categorized as Basic Documentation (BD) and Basic Documentation plus Supplemental Coordination (BD+).

In all cases, the documentation must outline the rationale for the project and include backup information sufficient to support the design decisions. Document the roadway configuration prior to implementation of a minor operational enhancement project. Documentation is to be retained in a permanent retrievable file at a central location in each region.

(1) Projects

Basic Documentation (BD) level applies to regulatory or driver guidance projects. Documentation consists of an unstructured compilation of materials sufficient to validate the designer's decisions. Materials may include: meeting notes, printed e-mails, record of phone conversations, copies of memos, correspondence, and backup data such as level of service modeling, accident data, and design drawings. A single narrative outlining the decision-making process from start to finish is not required, provided that the materials retained in the file can be traced to a decision consistent with the project design. This level of documentation includes a requirement for

inputting the project information into the TRaffic ACtion Tracking System (TRACTS) database at the conclusion of the project.

Basic Documentation plus Supplemental Coordination (BD+) level applies to all projects except regulatory or driver guidance projects. A more comprehensive evaluation of options and constraints is required for this documentation level. Documentation includes basic documentation with additional information describing coordination efforts with other WSDOT groups having a stake in the project. Document the coordination efforts with the following disciplines: The Public, Environmental, Hydraulics, Local Programs, Maintenance, Materials, Program Management, Real Estate Services, Urban Mobility, and Utilities. This level of documentation also includes a requirement for inputting the project information into the TRACTS database at the conclusion of the project.

(2) Design Deviations

Design Justification (DJ) is a written narrative summarizing the rationale for introduction of a feature that varies from the applicable *Design Manual* guidelines. Include in the narrative sufficient information to describe the problem, the constraints, and the trade-offs at a level of detail that provides a defendable professional judgment. DJs are not intended to have the same level of formality as the Level 2, 3, and 4 deviations. DJs may use written memos, e-mails, or documented discussions with the approving traffic authority. The region's Traffic Engineer has responsibility for approving Design Justifications. The DJ documentation must include the name and date of the approving authority. At the time the work order is approved, the region's Project Development Engineer and the Assistant State Design Engineer are to be sent informational copies of the Design Justification, to provide them an opportunity to communicate their concerns. Comment on the informational copy is not mandatory, and progress toward project implementation does not wait on a response.

Level 2 documentation serves to justify a deviation to the specified design guidance. Within the document, summarize the project, the design guidelines, the proposed elements that vary from design guidelines, alternatives analyzed, constraints and impacts of each alternative, and the recommended alternative. Level 2 documentation requires joint approval of the region's Traffic Engineer and region's Project Development Engineer. At the time the work order is approved, the Assistant State Design engineer is to be sent an informational copy of the Level 2 documentation to provide an opportunity to communicate concerns. Comment on the informational copy is not mandatory, and progress toward project implementation does not wait on a response.

Level 3 documentation requirements include the level 2 requirements, however the approval process is through the region's Traffic Engineer, and region's Project Development Engineer with final approval from the Assistant State Design Engineer.

Level 4 documentation requirements include the level 3 requirements, however the approval process is through region's Traffic Engineer, region's Project Development Engineer, and the Assistant State Design Engineer with final approval from the Federal Highway Administration on Interstate routes.

Level 2, 3, and 4 design deviation requests are intended to be stand-alone documentation describing the project, design criteria, proposed element(s), why the desired standard was not or can not be used, alternatives evaluated, and a request for approval. Include funding source(s), type of route, project limits, design classification, posted speed, current ADT, and percent truck traffic in the project description. Justification for the design deviation can include project costs, but must be supported by at least two of the following:

- Accident history or potential.
- Engineering judgment.
- Environmental issues.
- Route continuity (consistency with adjoining route sections).
- The project is an interim solution (covering a 4 to 6 year time horizon).

Project Type	MAIN LINE						RAMPS *						RAMP TERMINALS OR INTERSECTIONS			CROSSROADS AT RAMPS					BARRIERS ALL		Doc. Level
Design Elements	Sight Dist.	Lane Width	Lane & Shldr Taper	Shldr Width	Fill/ Ditch Slopes	Clear Zone	Sight Dist.	Lane Width	Lane & Shldr Taper	Shldr Width	Fill/ Ditch Slopes	Clear Zone	Turn Radii	Angle	Sight Dist.	Lane Width	Shldr Width	Ped & Bike	Fill/ Ditch Slopes	Clear Zone	Term. & Trans. Section	** Std Run	
Regulatory - (Traffic Office Authority)																							**BD**
Driver Guidance - (Traffic Office Authority)																							**BD**
Pavement Widening																							
Turn Lane								**F/DJ**	**F/DJ**	**F/DJ**			**M/DJ**	**M/DJ**	**F/DJ**	**M/DJ**	**M/DJ**	**F/DJ**	**M/DJ**	**F/DJ**	**F/3**	**F/3**	**BD+**
Pullout							**F/DJ**	**F/DJ**	**F/DJ**	**F/DJ**	**F/DJ**	**F/DJ**	**M/DJ**		**F/DJ**	**M/DJ**	**M/DJ**	**F/DJ**	**M/DJ**	**F/DJ**	**F/3**	**F/3**	**BD+**
Expansion	**F/3**	**F/4**	**F/3**	**F/4**	**F/3**	**F/3**		**F/DJ**	**F/DJ**	**F/DJ**	**F/DJ**	**F/DJ**	**M/DJ**		**F/DJ**	**M/DJ**	**M/DJ**	**F/DJ**	**M/DJ**	**F/DJ**	**F/3**	**F/3**	**BD+**
Median Crossover	**F/3**	**F/4**	**F/3**	**F/4**	**F/3**	**F/3**															**F/3**	**F/3**	**BD+**
Rechannelize Existing Pavement																							
Pavement Markings	**F/3**	**F/4**	**F/3**	**F/4**		**F/3**	**F/DJ**	**F/DJ**	**F/DJ**	**F/DJ**		**F/DJ**	**M/DJ**	**M/DJ**	**F/DJ**	**M/DJ**	**M/DJ**	**F/DJ**		**F/DJ**	**F/3**	**F/3**	**BD+**
Raised Channelization							**F/DJ**	**F/DJ**	**F/DJ**	**F/DJ**		**F/DJ**	**M/DJ**	**M/DJ**	**F/DJ**	**M/DJ**	**M/DJ**	**F/DJ**		**F/DJ**	**F/3**	**F/3**	**BD+**
Nonmotorized Facilities																							
Sidewalk/Walkway													**M/DJ**	**M/DJ**	**F/DJ**	**M/DJ**	**M/DJ**	**F/DJ**	**M/DJ**	**F/DJ**	**F/3**	**F/3**	**BD+**
Separated Trails																		**F/DJ**			**F/3**	**F/3**	**BD+**
Spot Improvement													**M/DJ**	**M/DJ**	**F/DJ**	**M/DJ**	**M/DJ**	**F/DJ**		**F/DJ**			**BD+**
Roadside																							
Cross Section	**F/3**				**F/3**	**F/3**	**F/DJ**				**F/DJ**	**F/DJ**			**F/DJ**				**M/DJ**	**F/DJ**	**F/3**	**F/3**	**BD+**
Protection	**F/3**			**F/4**	**F/3**	**F/3**	**F/DJ**			**F/DJ**	**F/DJ**	**F/DJ**			**F/DJ**		**M/DJ**		**M/DJ**	**F/DJ**	**F/3**	**F/3**	**BD+**
New Object	**F/3**					**F/3**	**F/DJ**					**F/DJ**			**F/DJ**					**F/DJ**	**F/3**	**F/3**	**BD+**

☐ Not Applicable
F Full design level
M Modified design level. See Chapter 430.
DJ Design Justification required and Project Approval by region Traffic, with notification to OSC Design.
2 Deviation approval through the region Traffic and Project Development Engineer, with notification to OSC Design.
3 Deviation approval through level **2** and the Assistant State Design Engineer.
4 Deviation approval through level **3,** and FHWA on Interstate routes.
BD Basic Documentation required.
BD+ Basic Documentation plus supplemental coordination required.

If a project impacts any design element, the impacted elements are addressed. Elements not impacted, are not addressed.

For items not meeting the standard provided in the matrix, justification or deviation is required and is processed through the designated approval level, **DJ**, **2**, **3**, or **4**

For at-grade intersections on NHS routes, apply Matrix 2.

* Documentation must provide assurance of no adverse effect to main line flow. Otherwise process a deviation through level 4

** If existing shoulder width is decreased, when placing new guardrail or concrete barrier, a deviation request justifying the proposal is required.

Minor Operational Enhancement Matrix 1
Interstate & NHS Freeway Routes
Figure 340-2

Project Type	MAIN LINE						INTERSECTIONS				BARRIERS ALL		Doc. Level
Design Elements	Sight Dist.	Lane Width	Lane & Shldr Taper	Shldr Width	Fill/ Ditch Slopes	Clear Zone	Turn Radii	Angle	Sight Dist.	Ped & Bike	Term. & Trans. Section	** Std Run	
Regulatory - (Traffic Office Authority)													**BD**
Driver Guidance - (Traffic Office Authority)													**BD**
Pavement Widening													
Turn Lane	**M/2**	**M/3**	**F/2**	**M/3**	**M/2**	**F/2**	**M/DJ**	**M/DJ**	**F/DJ**	**F/DJ**	**F/3**	**F/3**	**BD+**
Pullout	**M/2**	**M/3**	**F/2**	**M/3**	**M/2**	**F/2**	**M/DJ**	**M/DJ**	**F/DJ**	**F/DJ**	**F/3**	**F/3**	**BD+**
Expansion	**M/2**	**M/3**	**F/2**	**M/3**	**M/2**	**F/2**	**M/DJ**	**M/DJ**	**F/DJ**	**F/DJ**	**F/3**	**F/3**	**BD+**
Rechannelize Existing Pavement													
Pavement Markings	**M/2**	**M/3**	**F/2**	**M/3**		**F/2**	**M/DJ**	**M/DJ**	**F/DJ**	**F/DJ**	**F/3**	**F/3**	**BD+**
Raised Channelizatior	**M/2**	**M/3**	**F/2**	**M/3**		**F/2**	**M/DJ**	**M/DJ**	**F/DJ**	**F/DJ**	**F/3**	**F/3**	**BD+**
Nonmotorized Facilities													
Sidewalk/Walkway	**M/2**	**M/3**	**F/2**	**M/3**	**M/2**	**F/2**	**M/DJ**	**M/DJ**	**F/DJ**	**F/DJ**	**F/3**	**F/3**	**BD+**
Separated Trails	**M/2**				**M/2**	**F/2**				**F/DJ**	**F/3**	**F/3**	**BD+**
Spot Improvement	**M/2**	**M/3**	**F/2**	**M/3**	**M/2**	**F/2**	**M/DJ**	**M/DJ**	**F/DJ**	**F/DJ**	**F/3**	**F/3**	**BD+**
Roadside													
Cross Section	**M/2**				**M/2**	**F/2**			**F/DJ**		**F/3**	**F/3**	**BD+**
Protection	**M/2**				**M/2**	**F/2**			**F/DJ**		**F/3**	**F/3**	**BD+**
New Object	**M/2**				**M/2**	**F/2**			**F/DJ**		**F/3**	**F/3**	**BD+**

☐ Not Applicable
F Full design level
M Modified design level. See Chapter 430.
DJ Design Justification required and Project Approval by region Traffic, with notification to OSC Design.
2 Deviation approval through the region Traffic and Project Development Engineer, with notification to OSC Design.
3 Deviation approval through level **2** and the Assistant State Design Engineer.
BD Basic Documentation required.
BD+ Basic Documentation plus supplemental coordination required.

If a project impacts any design element, the impacted elements are addressed. Elements not impacted, are not addressed.

For items not meeting the standard provided in the matrix, justification or deviation is required and is processed through the designated approval level, **DJ**, **2** or **3**

For interchange features, apply Matrix 1.

** If existing shoulder width is decreased, when placing new guardrail or concrete barrier, a deviation request justifying the proposal is required.

Minor Operational Enhancement Matrix 2
NHS Nonfreeway Routes
Figure 340-3

⇩ Project Type	MAIN LINE						INTERSECTIONS				BARRIERS ALL		Doc. Level
Design Elements ⇨	Sight Dist.	Lane Width	Lane & Shldr Taper	Shldr Width	Fill/ Ditch Slopes	Clear Zone	Turn Radii	Angle	Sight Dist.	Ped & Bike	Term. & Trans. Section	** Std Run	
Regulatory - (Traffic Office Authority)													**BD**
Driver Guidance - (Traffic Office Authority)													**BD**
Pavement Widening													
Turn Lane	**M/DJ**	**M/2**	**F/DJ**	**M/2**	**M/DJ**	**F/DJ**	**M/DJ**	**M/DJ**	**F/DJ**	**F/DJ**	**F/2**	**F/2**	**BD+**
Pullout	**M/DJ**	**M/2**	**F/DJ**	**M/2**	**M/DJ**	**F/DJ**	**M/DJ**	**M/DJ**	**F/DJ**	**F/DJ**	**F/2**	**F/2**	**BD+**
Expansion	**M/DJ**	**M/2**	**F/DJ**	**M/2**	**M/DJ**	**F/DJ**	**M/DJ**	**M/DJ**	**F/DJ**	**F/DJ**	**F/2**	**F/2**	**BD+**
Rechannelize Existing Pavement													
Pavement Markings	**M/DJ**	**M/2**	**F/DJ**	**M/2**		**F/DJ**	**M/DJ**	**M/DJ**	**F/DJ**	**F/DJ**	**F/2**	**F/2**	**BD+**
Raised Channelization	**M/DJ**	**M/2**	**F/DJ**	**M/2**		**F/DJ**	**M/DJ**	**M/DJ**	**F/DJ**	**F/DJ**	**F/2**	**F/2**	**BD+**
Nonmotorized Facilities													
Sidewalk/Walkway	**M/DJ**	**M/2**	**F/DJ**	**M/2**	**M/DJ**	**F/DJ**	**M/DJ**	**M/DJ**	**F/DJ**	**F/DJ**	**F/2**	**F/2**	**BD+**
Separated Trails	**M/DJ**				**M/DJ**	**F/DJ**				**F/DJ**	**F/2**	**F/2**	**BD+**
Spot Improvement	**M/DJ**	**M/2**	**F/DJ**	**M/2**	**M/DJ**	**F/DJ**	**M/DJ**	**M/DJ**	**F/DJ**	**F/DJ**	**F/2**	**F/2**	**BD+**
Roadside													
Cross Section	**M/DJ**				**M/DJ**	**F/DJ**			**F/DJ**		**F/2**	**F/2**	**BD+**
Protection	**M/DJ**				**M/DJ**	**F/DJ**			**F/DJ**		**F/2**	**F/2**	**BD+**
New Object	**M/DJ**				**M/DJ**	**F/DJ**			**F/DJ**		**F/2**	**F/2**	**BD+**

☐ Not Applicable
F Full design level
M Modified design level. See Chapter 430.
DJ Design Justification required and Project Approval by region Traffic, with notification to OSC Design.
2 Deviation approval through the region Traffic and Project Development Engineer, with notification to OSC Design.
3 Deviation approval through level **2** and the Assistant State Design Engineer.
BD Basic Documentation required.
BD+ Basic Documentation plus supplemental coordination required.

If a project impacts any design element, the impacted elements are addressed. Elements not impacted, are not addressed.

For items not meeting the standard provided in the matrix, justification or deviation is required and is processed through the designated approval level, **DJ**, **2** or **3**

For interchange features, apply Matrix 1.

** If existing shoulder width is decreased, when placing new guardrail or concrete barrier, a deviation request justifying the proposal is required.

Minor Operational Enhancement Matrix 3
Non-NHS Routes
Figure 340-4

DatePlaceholder

TO: Region Traffic Engineer

THRU:

FROM:

SUBJECT:

Design Approved By:

_____

Region Traffic Engineer

_____

Date

General Information

SR _____ is a *(NHS or Non-NHS*) route, and classified as a *(Urban or Rural) (Interstate, Principle Arterial, Minor Arterial, or Collector)* in_____ County. The posted speed limit is mph. The ADT is, _____ with _____ percent trucks. The project is within a *(full, partial, or modified limited access control, or Class 1 - 5 managed access controlled)* area.

Project Initiation

How did the project get started? Accident history, constituent call, or letter?

Existing Geometrics

What is out there today? Lane, shoulder, sidewalk widths? Turn pockets, etc.?

Project Description

How did you come to the design decision being proposed? What does it resolve for the situation at hand? What options have you looked at? Why were other options not selected?

Proposed Geometrics

What will be out there when you are through? Lane, shoulder, sidewalk widths? Turn pockets, etc.?

Q Project Design Summary/Approval Template

Figure 340-5a

Resurfacing

If pavement is involved what does the resurfacing report say to use?

Pavement Marking/Traffic Control Devices

What happens with the pavement markings? Signing? Illumination? Signals? Etc.?

Environmental Approval

Did you check with the Environmental Office? Are there any issues or permits that need to be addressed? Hydraulics?

Deviations

Are there any deviations? Describe briefly what features are deviated and the date of approval.

Permits

Are there any permits or easements needed? Construction permits? Noise variances? Utility relocations? Detours? Others?

Project Cost and Schedule

How much do you anticipate spending? When is the project scheduled for advertisement? When do you anticipate the project will be completed?

Sole Source Justification

Some traffic items are sole source and require justification. Have you completed the process?

Work Zone Traffic Control

What happens to traffic, pedestrians, and bicyclists during construction? Is a lane taken or reduced in width? Night work? Shoulder work? Duration? Does Washington State Patrol (WSP) need to be involved?

Local Agency Coordination

Do we need to coordinate with, or notify the city or county? WSP?

We are requesting approval for the Subject project. This project was designed in accordance with Q Program guidelines for Minor Operational Enhancements, Matrix _____ *note matrix title and project type line.*

Typist's Initials Placeholder

Attachments: Channelization Plan?
Permits?
Deviations?

cc: OSC Design 47330

Q Project Design Summary/Approval Template (continued)
Figure 340-5b

410.01 General
410.02 Required Basic Safety Items of Work
410.03 Minor Safety and Minor Preservation Work

410.01 General

Basic design level (B) preserves pavement structures, extends pavement service life, and maintains safe operations of the highway. The basic design level includes restoring the roadway for safe operations and, where needed, may include safety enhancement. Flexibility is provided so that other conditions can be enhanced while remaining within the scope of pavement preservation work.

The required safety items of work listed below may be programmed under a separate project from the paving project as long as there is some benefit to the delay, the safety features remain functional, and the work is completed within two years after the completion of the paving project. If some of the required items are separated from the paving project, maintain a separate documentation file that addresses the separation of work during the two-year time period.

For bituminous surface treatment projects on non-NHS routes, the separation of required safety items is not limited to the two years stated above. The safety work can be accomplished separately using a corridor-by-corridor approach.

410.02 Required Basic Safety Items of Work

For basic design level (B), the following items of work are required:

- Install and replace delineation in accordance with Chapter 830
- Install and replace rumble strips in accordance with the matrices and Chapter 700
- Adjust existing features that are affected by resurfacing, such as monuments, catch basins, and access covers
- Adjust guardrail height in accordance with Chapter 710
- Replace deficient signing, as needed, using current standards. This does not include replacement of sign bridges or cantilever supports
- Relocate, protect, or provide breakaway features for sign supports, luminaires, and WSDOT electrical service poles inside the design clear zone
- Restore sight distance at public road intersections and the inside of curves through low cost measures if they are available such as removal or relocation of signs and other obstructions, and cutting of vegetative matter
- Upgrade nonstandard bridge rail in accordance with the matrices and Chapter 710
- Upgrade barrier terminals and bridge end protection, including transitions, in accordance with Chapter 710
- Restore the cross slope to 1.5 percent when the existing cross slope is flatter than 1.5 percent and, in the engineer's judgment, the steeper slope is needed to solve highway runoff problems in areas of intense rainfall

410.03 Minor Safety and Minor Preservation Work

Consider the following items, where appropriate, within the limits of a paving project:

- Spot safety enhancements. These are modifications to isolated roadway or roadside features that, in the engineer's judgment, reduce potential accident frequency or severity
- Striping changes that will provide additional or improved channelization for intersections where sufficient pavement width and structural adequacy exist
- Roadside safety hardware (such as guardrail, signposts, impact attenuators)

- Addressing Location 1 Utility Objects in accordance with the *Utilities Accommodation Policy*, M 22-86

Consider the following items when restoration, replacement, or completion is necessary to assure that an existing system can function as intended:

- Right of way fencing
- Drainage
- Illumination
- Electrical
- Pedestrian and bicycle use

Examples of the above include, but are not limited to, the following: installing short sections of fence needed to control access, replacing grates that are a hazard to bicycles, upgrading electrical system components that require excessive maintenance, and beveling culverts.

P65:DP/DME

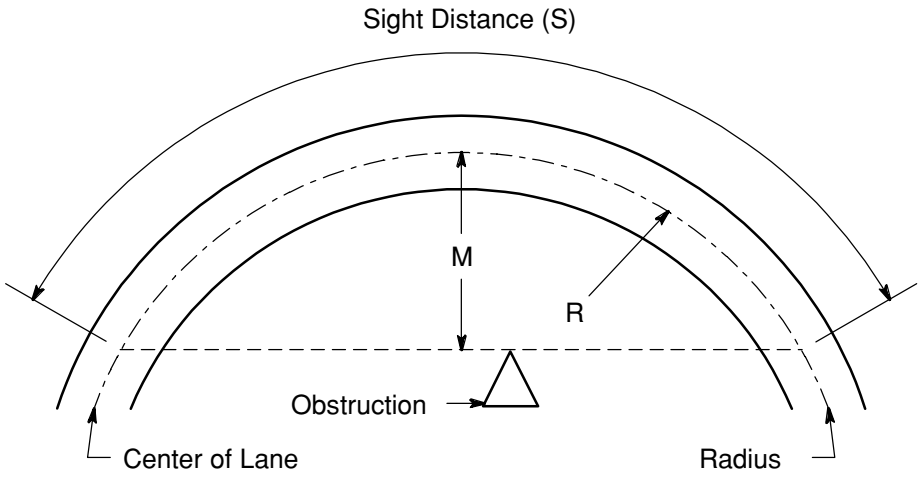

M is the distance in feet from the center line
of the inside lane to the obstruction.
Obstruction is a cut slope or other object
2 ft or more above the inside lane.

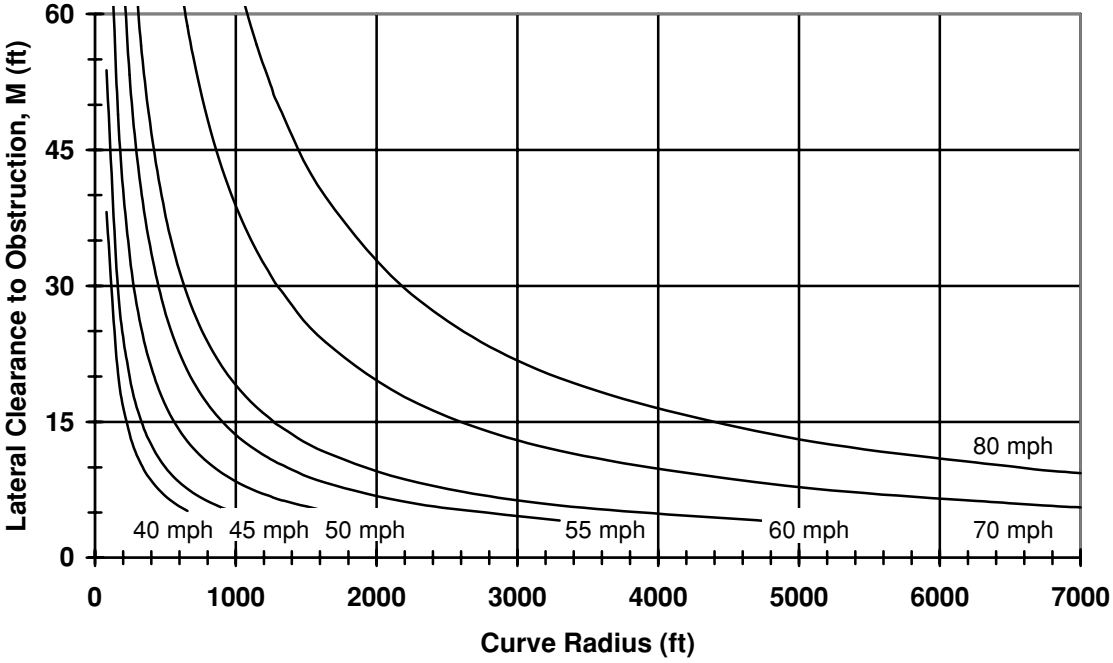

When the intersection of the lateral clearance (M) with the
curve radius (R) falls below the curve for the selected
design speed, corrective action must be considered.

Evaluation for Stopping Sight Distance for Horizontal Curves
Modified Design Level
Figure 430-8

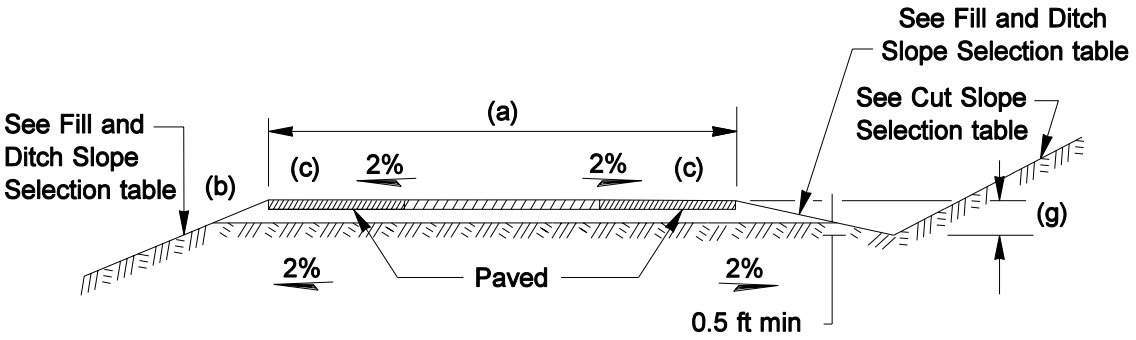

Height of Cut (ft)	Slope not Steeper than (d)
0 - 5	4H:1V
5 - 20	3H:1V
over 20	2H:1V

Cut Slope Selection

Height of Fill/Depth of Ditch (ft)	Slope not Steeper than
0 - 20	4H:1V
20- 30	3H:1V
over 30	2H:1V(e)(f)

Fill and Ditch Slope Selection

Notes:

(a) See Figures 430-3 and 4 for minimum roadway widths and Figures 430-5 and 6 for turning roadway widths.

(b) Widen and round embankments steeper than 4H:1V.

(c) See Chapter 640 for shoulder slope requirements.

(d) Or as recommended by the soils or geotechnical report. Refer to Chapter 700 for clear zone and barrier requirements.

(e) Consider flatter slopes for the greater fill heights and ditch depths where practical.

(f) Fill slopes up to 1 1/2H:1V may be used where favorable soil conditions exist. Refer to Chapter 640 for additional details and Chapter 700 for clear zone and barrier requirements.

(g) Minimum ditch depth is 2 ft for design speeds over 40 mph or 1.5 ft for design speeds 40 mph or less.

Main Line Roadway Sections
Modified Design Level
Figure 430-9

520 Design of Pavement Structure

520.01 Introduction
520.02 Estimating Tables

520.01 Introduction

Detailed criteria and methods that govern pavement design are in the *WSDOT Pavement Guide for Design, Evaluation andRehabilitation* .

520.02 Estimating Tables

Figures 520-1 through 520-5b are to be used when detailed estimates are required. They arefor pavement sections, shoulder sections, stockpiles, and asphalt distribution. Prime coats and fog seal are in Figure 520-2a.

P65:DP/DME

Unit Dry Weight				
Type of Material	Truck Measure		Compacted on Roadway	
	lb/cy	T/ cy	lb/ cy	T/ cy
Ballast	3100	1.55	3900	1.95
Crushed Surfacing Top Course	2850	1.43	3700	1.85
Crushed Surfacing Base Course	2950	1.48	3700	1.85
Screened Gravel Surfacing			3700	1.85
**Gravel Base			3400 - 3800	1.70 - 1.90
Shoulder Ballast			2800	1.40
Maintenance Sand 3/8” - 0	2900	1.45		
Mineral Aggregate 2” - 1”	2600	1.30		
Mineral Aggregate 1 3/4” - 3/4”	2600	1.30		
Mineral Aggregate 1 1/2” - 3/4”	2550	1.28		
Mineral Aggregate 1” - 3/4”	2500	1.25		
Mineral Aggregate 3/4” - 1/2”	2400	1.20		
Mineral Aggregate 1 1/4” - 1/4”	2600	1.30		
Mineral Aggregate 1” - 1/4”	2600	1.30		
Mineral Aggregate 7/8” - 1/4”	2550	1.28		
Mineral Aggregate 3/4” - 1/4”	2500	1.25		
Mineral Aggregate 5/8” - 1/4”	2650	1.33		
Mineral Aggregate 1/2” - 1/4” or #4	2600	1.30		
Mineral Aggregate 1/4” or #4 - 0	2900	1.45		
Concrete Aggr. No. 2 (1 1/4” - #4)	3000	1.50		
Concrete Sand (Fine Aggregate)	2900	1.45		
Crushed Cover Stone	2850	1.43		

** 3,700 lb/cy (1.85 tons/cy) is recommended as the most suitable factor; however, if the grading approaches the coarseness of ballast, the factor would approach 3,800 lb/cy (1.90 tons/cy), and if the grading contains more than 45% sand, the factor would decrease, approaching 3,400 lb/cy (1.70 tons/cy) for material that is essentially all sand.

Mineral Aggregate in Stockpile * (tons/mile)								
Class	Pavement Compacted Depth	Agg. Size	Approx Mix Ratio	Roadway Width (ft)				
	(ft)	(in)	(%)	10	11	12	22	24
A & B	0.10	5/8” - 1/4”	35	145	160	175	320	350
		1/4” - 0	65	270	297	324	594	648
D	0.04	3/8” - 0	100	166	183	199	366	398
E	0.10	1 1/4” - 1/4”	50	208	229	249	458	498
		1/4” - 0	50	208	229	249	458	498
F	0.10	3/4” - 1/4”	35	145	160	175	320	350
		1/4” - 0	65	270	297	324	594	648
G	0.10	3/8” - 0	100	416	457	499	914	998

* 94% by weight of complete mix (92.5% min - 96% max)
{(142 lb/sy/.010 ft = 2.13 T/cy)}

Includes 10% handling loss.

Mineral filler 1% of wearing course for Class B.

General Notes:

Weights shown are dry weights and corrections are required for water contents.

The tabulated weights for the materials are reasonably close; however, apply corrections in the following order:

For specific gravity:

$$\text{Wt.} = \frac{\text{tabular wt. x specific gravity on surface report}}{2.65}$$

For water content:

Wt. = tabular wt. x (1 + free water % in decimals)

If they are to be stockpiled, increase required quantities by 10 percent to allow for waste .

Direct attention to the inclusion of crushed surfacing top course material that may be required for keystone when estimating quantities for projects having ballast course.

Estimating — Miscellaneous Tables
Figure 520-1

General Data [1 2 3]							
Asphalt Concrete Pavement							
Complete Mix							
Class of Mix	Depth (ft)	Spread per sy		sy per ton	Tons/Mile Width (ft)		
		lb	ton		10	11	12
A, B, E, F & G	0.10	137	0.0685	14.60	402	442	482
D	0.04	55	0.0275	36.36	161	177	194

Prime Coats and Fog Seal														
Asphalt							Aggregate[4]							
Application	Type of Asphalt[5]	Application gal[6] per sy	Tons[6] per sy	Tons/Mile Width (ft)			Application lb per sy	Tons/Mile Width (ft)			cy per sy	cy/Mile Width (ft)		
				10	11	12		10	11	12		10	11	12
Prime Coat	MC-250	0.25	0.001004	5.9	6.5	7.1	30	88	97	106	0.0105	62	68	74
Fog Seal	CSS-1	0.04	0.000167	1.0	1.1	1.2								

Specific Data [1 2 3]														
Asphalt Concrete Paving Quantities (tons/mile) *														
Width (ft)	Depth of Pavement (ft)													
	0.10	0.15	0.20	0.25	0.30	0.35	0.40	0.45	0.50	0.55	0.60	0.65	0.70	0.75
4	161	241	321	402	482	563	643	723	804	884	964	1045	1125	1206
6	241	362	482	603	723	844	964	1085	1206	1326	1447	1567	1688	1808
8	321	482	643	804	964	1125	1286	1447	1607	1768	1929	2090	2250	2411
10	402	603	804	1005	1206	1407	1607	1808	2009	2210	2411	2612	2813	3014
11	442	663	884	1105	1326	1547	1768	1989	2210	2431	2652	2873	3094	3315
12	482	723	964	1206	1447	1688	1929	2170	2411	2652	2893	3135	3376	3617
22	884	1326	1768	2210	2652	3094	3536	3978	4421	4863	5305	5747	6189	6631
24	964	1447	1629	2411	2893	3376	3858	4340	4822	5305	5787	6269	6751	7234
* Based on 137 lb/sy of 0.10 ft compacted depth = 2.05 tons/cy														

[1]The specific gravity of the aggregate will affect the weight of aggregate in the completed mix.

[2]The percentage of fine mineral in the coarse aggregate will affect the ratio of coarse to fine. If the coarse aggregate produced contains an excessive amount of fines (1/4" to 0), increase the percentage of coarse aggregate and decrease the fines accordingly.

[3]Quantities shown do not provide for widening, waste from stockpile, or thickened edges.

[4]See miscellaneous tables for the average weights of mineral aggregates used in calculation of this data.

[5]The column "Type of Asphalt" is shown for the purpose of conversion to proper weights for the asphalt being used and does not imply that the particular grade shown is required for the respective treatment.

[6]Quantities shown are retained (residual) asphalt.

Estimating — Asphalt Concrete Pavement and Asphalt Distribution Tables

Figure 520-2a

Asphalt Distribution (tons/mile)[1]																						
Asphalt	Gal./ton	Width	Rate of Application (Gal./cy)																			
Grade	@ 60° F	(ft)	0.05	0.10	0.15	0.20	0.25	0.30	0.35	0.40	0.45	0.50	0.55	0.60	0.65	0.70	0.75	0.80	0.85	0.90	0.95	1.00
		10	1.16	2.32	3.48	4.64	5.80	6.96	8.12	9.28	10.46	11.59	12.79	13.91	15.07	16.23	17.39	18.55	19.71	20.87	22.03	23.19
SC, MC, RC	253	11	1.28	2.55	3.83	5.10	6.38	7.65	8.93	10.20	11.48	12.75	14.03	15.30	16.58	17.86	19.13	20.41	21.68	22.96	24.23	25.51
70		12	1.39	2.78	4.17	5.57	6.96	8.35	9.74	11.13	12.52	13.91	15.30	16.70	18.09	19.48	20.87	22.26	23.65	25.04	26.43	27.83
		10	1.18	2.36	3.53	4.71	5.89	7.07	8.25	9.42	10.60	11.78	12.96	14.14	15.31	16.49	17.67	18.85	20.03	21.20	22.38	23.56
SC, MC, RC	249	11	1.30	2.59	3.89	5.18	6.48	7.78	9.07	10.37	11.66	12.96	14.25	15.55	16.85	18.14	19.44	20.73	22.03	23.33	24.62	25.92
250		12	1.41	2.83	4.24	5.65	7.07	8.48	9.90	11.31	12.72	14.14	15.55	16.96	18.38	19.79	21.20	22.62	24.03	25.45	26.86	28.27
		10	1.20	2.39	3.59	4.79	5.99	7.18	8.38	9.58	10.78	11.97	13.17	14.37	15.56	16.76	17.96	19.16	20.35	21.55	22.75	23.95
SC, MC, RC	245	11	1.30	2.63	3.95	5.27	6.59	7.90	9.22	10.54	11.85	13.17	14.49	15.80	17.12	18.44	19.79	21.07	22.39	23.71	25.02	26.34
800		12	1.44	2.87	4.31	5.75	7.18	8.62	10.06	11.49	12.93	14.37	15.80	17.24	18.68	20.11	21.55	22.99	24.42	25.86	27.30	28.73
		10	1.22	2.44	3.66	4.87	6.09	7.31	8.53	9.75	10.97	12.19	13.41	14.62	15.84	17.06	18.28	19.50	20.72	21.94	23.15	24.37
SC, MC, RC	241	11	1.34	2.68	4.02	5.36	6.69	8.03	9.37	10.71	12.05	13.39	14.73	16.07	17.41	18.74	20.08	21.42	22.76	24.10	25.44	26.78
3000		12	1.46	2.92	4.38	5.84	7.30	8.76	10.22	11.68	13.15	14.61	16.07	17.53	18.99	20.45	21.91	23.37	24.83	26.29	27.75	29.21
Paving		10	1.23	2.45	3.68	4.91	6.14	7.36	8.59	9.82	11.05	12.27	13.50	14.73	15.96	17.18	18.41	19.64	20.86	22.09	23.32	24.55
Asphalt	239	11	1.35	2.70	4.05	5.40	6.75	8.10	9.45	10.80	12.15	13.50	14.85	16.20	17.55	18.90	20.25	21.60	22.95	24.30	25.65	27.00
200-300 PEN.		12	1.47	2.95	4.42	5.89	7.36	8.84	10.31	11.78	13.26	14.73	16.20	17.67	19.15	20.62	22.09	23.56	25.04	26.51	27.98	29.46
		10	1.22	2.44	3.67	4.89	6.11	7.33	8.56	9.77	11.00	12.22	13.44	14.67	15.89	17.11	18.33	19.56	20.78	22.00	23.22	24.44
Emulsified	240	11	1.34	2.67	4.03	5.38	6.72	8.07	9.41	10.76	12.10	13.45	14.79	16.13	17.48	18.82	20.17	21.51	22.86	24.20	25.54	26.89
Asphalt		12	1.47	2.93	4.40	5.87	7.33	8.80	10.27	11.73	13.20	14.67	16.13	17.60	19.07	20.53	22.00	23.47	24.93	26.40	27.87	29.33

[1]Quantities of asphalt shown are based on 60°F temperature. Recompute to the application temperature for the particular grade.

Estimating — Asphalt Concrete Pavement and Asphalt Distribution Tables

Figure 520-2b

Bituminous Surface Treatment [1]																	
Class of Mix	Type of Application	Average Application		Mineral Aggregate[3]						Average Spread	Asphalt [2,5,6]						Basic[4] Asphalt Used
				10 ft		11 ft		12 ft			10 ft		11 ft		12 ft		
		lb/sy	cy/sy	T/mi	cy/mi	T/mi	cy/mi	T/mi	cy/mi	gal/sy	gal/mi	T/mi	gal/mi	T/mi	gal/mi	T/mi	
A	Prime Coat									0.48	2787	11.2	3065	12.3	3344	13.4	MC-250
	Crushed Screenings 3/4” - 1/2”	35	0.0146	103	86	113	94	123	103								
	Tack Coat									0.43	2493	10.4	2743	11.4	2992	12.5	CRS-2
	Crushed Screenings 1/2” -1/4”	28	0.0106	81	62	89	68	97	74								
	Crushed Screenings 1/4” - 0”	5	0.0017	15	10	16	11	18	12								
	Totals	68	0.0269	199	158	218	173	238	189	0.91	5280	21.6	5808	23.7	6336	25.9	
B	Seal Coat									0.50	2933	12.2	3227	13.4	3520	14.7	CRS-2
	Crushed Screenings 5/8” - 1/4”	33	0.0123	95	72	105	79	114	86								
	Crushed Screenings 1/4” - 0”	5	0.0017	15	10	16	11	18	12								
	Totals	38	0.0140	110	82	121	90	132	98	0.50	2933	12.2	3227	13.4	3520	14.7	
C	Seal Coat									0.45	2640	11.0	2904	12.1	3168	13.2	CRS-2
	Crushed Screenings 1/2” - 1/4”	28	0.0106	81	62	89	68	97	74								
	Crushed Screenings 1/4” - 0”	5	0.0017	15	10	16	11	18	12								
	Totals	33	0.0123	96	72	105	79	115	86	0.45	2640	11.0	2904	12.1	3168	13.2	
D	Seal Coat									0.43	2493	10.4	2743	11.4	2992	12.5	CRS-2
	Crushed Screenings 3/8” - #10	25	0.0088	73	51	81	57	88	62								
Preseal for B, C & D	Preseal									0.18	1027	4.3	1129	4.7	1232	5.1	CRS-2
	Crushed Screenings 1/4” -0”	12	0.0040	34	23	37	26	40	28								

1 Quantities shown do not provide for widening, waste from stockpile, or thickened edges.
2 Quantities of asphalt shown are based on 60°F temperature. Recompute to the application temperature for the particular grade.
3 See miscellaneous tables for average weights of material aggregates and weights of mineral aggregate in stockpile.
4 The column “Basic Asphalt Used” is shown for the purpose of conversion to proper weights for the asphalt being used and does not imply that the particular grade shown is required for the respective treatment.
5 For cutbacks, decrease asphalt by 25 percent.
6 For stress absorbing membrane (rubberized asphalt), increase asphalt by 25 percent.

Estimating — Bituminous Surface Treatment
Figure 520-3

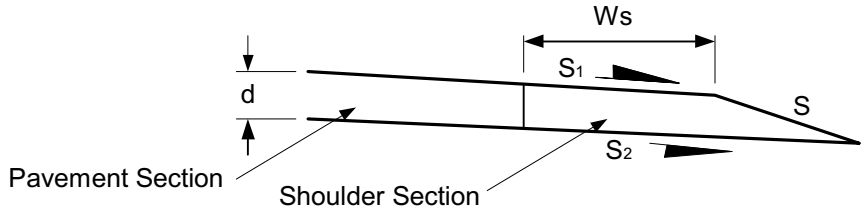

Ws = Shoulder Width - (Varies 4 ft, 6 ft, 8 ft, 10 ft, 12 ft)
d = Depth of Section - (Varies 0.05 ft to 2 ft)
S = Side Slope (H:V) - (Varies 2:1, 3:1, 4:1, and 6:1)
S_1 = Top Shoulder Slope - (Varies -0.02 ft/ft or -0.05 ft/ft)
S_2 = Bottom Shoulder Slope - (Varies -0.02 ft/ft or -0.05 ft/ft)

Formula for Shoulder Section		
Tons/mile. = (A)(K) K = (5280/27)(1.85 tons/cy) $$A = \frac{\left[d + W_S(1/S - S_1)\right]^2 S}{2(1 - SS_2)} - \frac{W_S^2}{2}(1/S - S_1)$$		
Case 1	S_1 = S2 = -0.02 ft/ft	$A = \frac{\left[d + W_S(1/S - 0.02)\right]^2 S}{2(1 - 0.02S)} - \frac{W_S^2}{2}(1/S - 0.02)$
Case 2	S_1 = -0.02 ft/ft, S2 = -0.05 ft/ft	$A = \frac{\left[d + W_S(1/S - 0.02)\right]^2 S}{2(1 - 0.05S)} - \frac{W_S^2}{2}(1/S - 0.02)$
Case 3	S_1 = -0.05 ft/ft, S2 = -0.02 ft/ft	$A = \frac{\left[d + W_S(1/S - 0.05)\right]^2 S}{2(1 - 0.02S)} - \frac{W_S^2}{2}(1/S - 0.05)$ *
Case 4	S_1 = S2 = -0.05 ft/ft	$A = \frac{\left[d + W_S(1/S - 0.05)\right]^2 S}{2(1 - 0.05S)} - \frac{W_S^2}{2}(1/S - 0.05)$
*Limit: Positive Values of A only when d = Ws(0.03)		

EXAMPLE: Shoulder Section

Given -	Shoulder Width 8 ft
Top Course	0.25 ft
Base Course	0.80 ft
Total Depth	1.05 ft
Side Slope	3:1
Shoulder Slope	-0.05
Subgrade Slope	-0.02

Depth	1.05 ft (Case 3) =	3070 tons/mile
Top Course	0.25 ft (Case 4) =	763 tons/mile
Base Course	=	2307 tons/mile

Top Course	=	763 tons/mile
Base Course	=	2307 tons/mile

Estimating — Base and Surfacing Typical Section
Formulae and Example
Figure 520-4

640 Geometric Cross Section

640.01 General
640.02 References
640.03 Definitions
640.04 Roadways
640.05 Superelevation
640.06 Medians and Outer Separations
640.07 Roadsides
640.08 Roadway Sections
640.09 Documentation

640.01 General

Geometric cross sections for state highways are governed by functional classification criteria, traffic volume, and whether the highway is in a rural or urban area. See Chapter 440 for guidance on selecting a design class.

High Occupancy Vehicle (HOV) lanes must be considered when continuous through lanes are to be added within the limits of an urban area over 200,000 population (Chapter 1050).

When a state highway within an incorporated city or town is a portion of a city street, the design features must be developed in cooperation with the local agency. For city streets and county roads that are not part of the state highway system, use Chapter 468-18 WAC and the Local Agency Guidelines.

See the following chapters for additional information:

Chapter	Subject
430	all roadway widths for modified design level
440	lane and shoulder widths for full design level
440	shoulder widths at curbs
910	requirements for islands
940	lane and shoulder widths for ramps

640.02 References

Washington Administrative Code (WAC 468-18-040), "Design standards for rearranged county roads, frontage roads, access roads, intersections, ramps and crossings"

Standard Plans for Road, Bridge, and Municipal Construction (Standard Plans), M 21-01, WSDOT

Plans Preparation Manual, WSDOT, M 22-31

Highway Runoff Manual, M 31-16, WSDOT

Local Agency Guidelines (LAG), M 36-63, WSDOT

Standard Specifications for Road, Bridge, and Municipal Construction (Standard Specifications), M 41-10,WSDOT.

WSDOT Pavement Guide for Design, Evaluation and Rehabilitation (Pavement Guide)*, WA-RD 335.1,* WSDOT

A Policy on Geometric Design of Highways and Streets (Green Book), 1994, AASHTO

640.03 Definitions

auxiliary lane The portion of the roadway adjoining the through lanes for parking, speed change, turning, storage for turning, weaving, truck climbing, and other purposes supplementary to through-traffic movement.

high pavement type Portland cement concrete pavement or asphalt cement concrete on a treated base.

intermediate pavement type Asphalt cement concrete pavement on an untreated base.

lane A strip of roadway used for a single line of vehicles.

lane width The lateral design width for a single lane, striped as shown in the Standard Plans and the Standard Specifications. The width of an existing lane is measured from the edge of traveled way to the center of the lane line or between the centers of successive lane lines.

low pavement type Bituminous surface treatment.

median The portion of a divided highway separating the traveled ways for traffic in opposite directions.

outer separation The area between the outside edge of traveled way for through traffic and the nearest edge of traveled way of a frontage road.

roadway The portion of a highway, including shoulders, for vehicular use. A divided highway has two or more roadways.

shoulder The portion of the roadway contiguous with the traveled way, primarily for accommodation of stopped vehicles, emergency use, lateral support of the traveled way, and use by pedestrians.

shoulder width The lateral width of the shoulder, measured from the outside edge of the outside lane to the edge of the roadway.

superelevation The rotation of the roadway cross section in such a manner as to overcome part of the centrifugal force that acts on a vehicle traversing a curve.

superelevation runoff The length of highway needed to accomplish the change in cross slope from a level section to a fully superelevated section, or vice versa.

superelevation transition length The length of highway needed to change the cross slope from normal crown or normal pavement slope to full superelevation.

tangent runout The length of highway needed to change the cross slope from normal crown to a section with adverse crown removed (level).

traveled way The portion of the roadway intended for the movement of vehicles, exclusive of shoulders and lanes for parking, turning, and storage for turning.

turning roadway A curve on an open highway, a ramp, or the connecting portion of roadway between two intersecting legs of an intersection.

640.04 Roadways

The cross sections shown in Figures 640-3, 4, 5, 6a, and 6b represent minimum standards for full design level.

For the specific type of roadway section see Chapter 440. For pavement type details see the Pavement Guide.

(1) Traveled Way Cross Slope

The cross slope on tangents and curves is a main element in cross section design. The cross slope or crown on tangent sections and large radius curves is complicated by two contradicting controls. Reasonably steep cross slopes are desirable to aid in water runoff and to minimize ponding as a result of pavement imperfections and unequal settlement. However, steep cross slopes are undesirable on tangents because of the tendency for vehicles to drift to the low side of the roadway. Cross slopes greater than 2% are noticeable in steering and increase susceptibility to sliding to the side on icy or wet pavements.

A 2% cross slope is normally used for tangents and large radius curves on high and intermediate pavement types.

In some areas, a somewhat steeper cross slope may be desirable to improve roadway runoff, although it is undesirable operationally. For these areas, with justification, a 2.5% cross slope may be used.

On low pavement types, such as bituminous surface treatment, the cross slope may be increased to 3% to allow for reduced construction control and greater settlement.

Superelevation on curves is determined by the design speed and the radius of the curve. See 640.05 for guidance on superelevation design.

(2) Turning Roadway Widths

The roadway on a curve may need to be widened to make the operating conditions comparable to those on tangents. There are two main reasons to do this. One is the offtracking of vehicles, such as trucks and buses. The other is the increased difficulty drivers have in keeping their vehicles in the center of the lane.

(a) **Two-lane two-way roadways.** Figure 640-7a shows the traveled way width W for two-lane two-way roadways. For values of R between those given, interpolate W and round up to the next foot.

Minimum traveled way width W based on the delta angle of the curve is shown in Figure 640-7b. Round W to the nearest foot.

(b) **Two-lane one-way roadways.** Figure 640-8a shows the traveled way width for two-lane one-way turning roadways, including two lane ramps and four lane divided highways. For values of R between those given, interpolate W and round up to the next foot. Treat each direction of travel of multilane divided facilities as a one-way roadway.

Minimum width W based on the delta angle of the curve is shown in Figure 640-8b. Round W to the nearest foot.

To keep widths to a minimum, traveled way widths for Figures 640-8a and 8b were calculated using the WB-40 design vehicle. When volumes are high for both trucks larger than the WB-40 and other traffic, consider using the widths from Figures 640-7a and 7b.

(c) **One-lane one-way roadways.** Figure 640-9a shows the traveled way width for one-lane one-way turning roadways, including one lane ramps. For values of R between those given, interpolate W and round up to the next foot.

For minimum widths based on the delta angle of the curve, use Figure 640-9b for one-lane roadways using the radius to the outer edge of the traveled way and Figure 640-9c for one-lane roadways using the radius on the inner edge of the traveled way. Round W to the nearest foot.

Build shoulder pavements at full depth for one-lane one-way roadways because, to keep widths to a minimum, traveled way widths were calculated using the WB-40 design vehicle which may force larger vehicles to encroach on the shoulders.

(d) **Other roadways.**

- For multilane two-way undivided roadways use the following:

$$W = \frac{W_a \times N}{2}$$

Where:

W = The multilane roadway width.

W_a = The width from 640.04(2)(a) for a two-lane two-way roadway.

N = The total number of lanes.

- For one-way roadways with more than two lanes, for each lane in addition to two, add the standard lane width for the highway functional class from Chapter 440 to the width from 640.04(2)(b).
- For three-lane ramps with HOV lanes, see Chapter 1050.

(e) **All roadways.** Full design shoulder widths for the highway functional class or ramp are added to the traveled way width to determine the total roadway width.

If the total roadway width deficiency is less than 2 ft on existing roadways that are to remain in place, correction is not required.

When widening

- Traveled way widening may be constructed on the inside of the traveled way or divided equally between the inside and outside.
- Place final marked center line, and any central longitudinal joint, midway between the edges of the widened traveled way.
- Provide widening throughout the curve length.
- For widening on the inside, make transitions on a tangent, where possible.
- For widening on the outside, develop the widening by extending the tangent. This avoids the appearance of a reverse curve that a taper would create.
- For widening of 6 ft or less, use a 1:25 taper, for widths greater than 6 ft use a 1:15 taper.

(3) Shoulders

Pave the shoulders of all highways where high or intermediate pavement types are used. Where low pavement type is used, treat the roadway full width.

Shoulder cross slopes are normally the same as the cross slopes for adjacent lanes. With justification, shoulder slopes may be increased to 6%. The maximum difference in slopes between the lane and the shoulder is 8%. Examples of locations where it may be desirable to have a shoulder grade different than the adjacent lane are:

- Where curbing is used.
- Where shoulder surface is bituminous, gravel, or crushed rock.
- Where overlays are planned and it is desirable to maintain the grade at the edge of the shoulder.
- On divided highways with depressed medians where it is desirable to drain the runoff into the median.
- On the high side of the superelevation on curves where it is desirable to drain storm water or melt water away from the roadway.

When asphalt concrete curb is used, see the Standard Plans for required widening. Widening is normally required when traffic barrier is installed (see Chapter 710).

It is preferred that curb not be used on high speed facilities. In some areas, curb may be needed to control runoff water until ground cover is attained to prevent erosion. Plan for the removal of the curb when the ground cover becomes adequate. Arrange for curb removal with regional maintenance as part of the future maintenance plans. When curb is used in conjunction with guardrail, see Chapter 710 for guidance.

Figures 640-10a and 10b represent shoulder details and requirements.

640.05 Superelevation

To maintain the desired design speed, highway and ramp curves are usually superelevated to overcome part of the centrifugal force that acts on a vehicle.

(1) Superelevation Rates for Open Highways and Ramps

The maximum superelevation rate allowed for open highways or ramps is 10%. (See Figure 640-11a.)

Base superelevation rate and its corresponding radius for open highways on Figure 640-11a, Superelevation Rate (10% Max), with the following exceptions:

- Figure 640-11b, Superelevation Rate (6% Max), may be used under the following conditions:

  1. Urban conditions without limited access

  2. Mountainous areas or locations that normally experience regular accumulations of snow and ice

  3. Short-term detours (generally implemented and removed in one construction season). For long-term detours, consider a higher rate up to 10%, especially when associated with a main line detour.

- Figure 640-11c, Superelevation Rate (8% Max), may be used for existing roadways and for the urban, mountainous, and snow and ice conditions that are less severe or where the 6% rate will not work; for example, where a curve with a radius less than the minimum for the design speed from Figure 640-11b is required.

Design the superelevation for ramps the same as for open highways. With justification, ramps in urban areas with a design speed of 35 mph or less, Figure 640-12 may be use to determine the superelevation.

Round the selected superelevation rate to the nearest full percent.

Document which set of curves is being used and, when a curve other than the 10% maximum rate is used, document why the curve was selected.

Depending on design speed, construct large radius curves with a normal crown section and superelevate curves with smaller radii in accordance with the appropriate superelevation from Figures 640-11a through 11c. The minimum radii for normal crown sections are shown in Figure 640-1.

Design Speed (mph)	Minimum Radius for Normal Crown Section (ft)
25	2,460
30	3,340
35	4,380
40	5,550
45	6,870
50	8,320
55	9,940
60	11,690
70	14,690
80	18,080

Minimum Radius for Normal Crown Section
Figure 640-1

(2) Existing Curves

Evaluate the superelevation on an existing curve to determine its adequacy. Use the following equation:

$$R = \frac{6.69V^2}{e+f}$$

Where:

R = The minimum allowable radius of the curve in feet.

V = Design speed in mph

e = Superelevation rate in percent

f = Side friction factor from Figure 640-2

Superelevation is deficient when the radius is less that the minimum from the equation.

For preservation projects, where the existing pavement is to remain in place, the superelevation on existing curves may be evaluated with a ball banking analysis.

Address deficient superelevation as provided in 640.05 (1).

Design Speed (mph)	Side Friction Factor *f*
20	17
25	16
30	16
35	15
40	15
45	14
50	14
60	12
70	10
80	8

Side Friction Factor
Figure 640-2

(3) Turning Movements at Intersections

Curves associated with the turning movements at intersections are superelevated assuming greater friction factors than open highway curves. Since speeds of turning vehicles are not constant and curve lengths are not excessive, higher friction factors can be tolerated. Use superelevation rates as high as practical, consistent with curve length and climatic conditions. Figure 640-12 shows acceptable ranges of superelevation for given design speed and radius. It is desirable to use the values in the upper half or third of the specified range whenever possible. Use judgment in considering local conditions such as snow and ice. When using high superelevation rates on short curves, provide smooth transitions with merging ramps or roadways.

(4) Superelevation Runoff for Highway Curves

For added comfort and safety, provide uniform superelevation runoff over a length adequate for the likely operating speeds.

Provide transitions for all superelevated highway curves as specified in Figures 640-13a through 13e. Which transition to use depends on the location of the pivot point, the direction of the curve, and the roadway cross slope.

Consider the profile of the edge of traveled way. To be pleasing in appearance, do not let it appear distorted. The combination of superelevation transition and grade may result in a hump or dip in the profile of the edge of traveled way. When this happens, the transition may be lengthened to eliminate the hump or dip. If the hump or dip cannot be eliminated this way, pay special attention to drainage in the low areas.

When reverse curves are necessary, provide sufficient tangent length for complete superelevation runoff for both curves (that is, from full superelevation of the first curve to level to full superelevation of the second curve). If tangent length is longer than this but not sufficient to provide standard super transitions (that is, from full superelevation of the first curve to normal crown to full superelevation of the second curve), increase the superelevation runoff lengths until they abut. This provides one continuous transition, without a normal crown section, similar to Designs C2 and D2 in Figures 640-13c and 3d except full super will be attained rather than the normal pavement slope as shown.

Superelevation runoff is permissible on structures but not desirable. Whenever practical, strive for full super or normal crown slopes on structures.

(5) Superelevation Runoff for Ramp Curves

Superelevation transition lengths for one-lane ramps are shown in Figure 640-14a and 14b. For multilane ramps, use the method for highway curves (Figures 640-13a through 13e).

Superelevation transition lengths (L_B) given in Figures 640-14a and 14b are for a single 15-ft lane. They are based on maximum cross slope change between the pivot point and the edge of the traveled way over the length of the superelevation transition. Maximum relative slopes for specific design speeds are similar to those given for highway curves.

For a single 15-ft lane, use the distances given in the L_B column for L_R.

For ramps wider than 15 ft, adjust the L_B distance by the equation for L_R and round upward to the next whole 5 ft or 10 ft increment.

640.06 Medians and Outer Separations

(1) Purpose

The main function of a median is to separate opposing traffic lanes. The main function of an outer separation is to separate the main roadway from a frontage road. Medians and outer separations also provide space for:

- Drainage facilities
- Undercrossing bridge piers
- Vehicle storage space for crossing and left turn movements at intersections
- Headlight glare screens, including planted or natural foliage
- Visual buffer of opposing traffic
- Safety refuge areas for errant or disabled vehicles
- Storage space for snow and water from traffic lanes
- Increased safety, comfort, and ease of operations

(2) Design

In addition to Figures 640-15a through 15c, refer to other applicable sections for minimum design requirements. Median widths in excess of the minimums are highly desirable. No attempt has been made to cover all the various grading techniques that are possible on wide, variable-width medians. Considerable latitude in treatment is intended, provided the requirements of minimum geometrics, safety, and aesthetics are met or exceeded.

When the horizontal and vertical alignments of the two roadways of a divided highway are independent of each other, determine median slopes in conformance with Figure 640-3. Unnecessary clearing, grubbing, and grading within wide medians is undesirable. Give preference to selective thinning and limited reshaping of the natural ground. For slopes into the face of traffic barriers, see Chapter 710.

In areas where land is expensive, make an economic comparison of wide medians to narrow medians with their barrier requirements. Consider right of way, construction, maintenance, and accident costs. The widths of medians need not be uniform. Make the transition between median widths as long as feasible.

Independent horizontal and vertical alignment, rather than parallel alignment, is desirable.

When using concrete barriers in depressed medians or on curves, provide for surface drainage on both sides of the barrier. The transverse notches in the base of precast concrete barrier are not intended to be used as a drainage feature but rather as pick-up points when placing the sections.

640.07 Roadsides

(1) Side Slopes

The Cut Slope Selection tables on Figures 640-3, 4, 5, and 6b are for preliminary estimates or where no other information is available. Design the final slope as recommended in the geotechnical report.

When designing side slopes, fit the slope selected for any cut or fill into the existing terrain to give a smooth transitional blend from the construction to the existing landscape. Slopes flatter than recommended are desirable, especially within the Design Clear Zone. Slopes not steeper than 4H:1V, with smooth transitions where the slope changes, will provide a reasonable opportunity to recover control of an errant vehicle. Where mowing is contemplated, slopes must not be steeper than 3H:1V. If there will be continuous traffic barrier on a fill slope, and mowing is not contemplated, the slope may be steeper than 3H:1V.

In cases of unusual geological features or soil conditions, treatment of the slopes will depend upon results of a review of the location by the region's Materials Engineer.

Do not disturb existing stable cut slopes just to meet the slopes given in the Cut Slope Selection tables on Figures 640-3, 4, 5, and 6b. When an existing slope is to be revised, document the reason for the change.

If borrow is required, consider obtaining it by flattening cut slopes uniformly on one or both sides of the highway. Where considering wasting excess material on an existing embankment slope, consult the region's Materials Engineer to verify that the foundation soil will support the additional material.

In all cases, provide for adequate drainage from the roadway surface and adequate drainage in ditches. See 640.07(4) for details on drainage ditches in embankment areas.

At locations where vegetated filter areas or detention facilities will be established to improve highway runoff water quality, provide appropriate slope, space, and soil conditions for that purpose. See the *Highway Runoff Manual* for design criteria and additional guidance.

Rounding, as shown in the Standard Plans, is required at the top of all roadway cut slopes, except for cuts in solid rock. Unless Class B slope treatment is called for, Class A slope treatment is used. Call for Class B slope treatment where space is limited, such as where right of way is restricted.

(2) Roadway Sections in Rock Cuts

Typical sections for rock cuts, illustrated in Figures 640-16a and 16b, are guides for the design and construction of roadways through rock cuts. Changes in slope or fallout area are recommended when justified. Base the selection of the appropriate sections on an engineering study and the recommendations of the region's Materials Engineer and Landscape Architect. Olympia Service Center Materials Lab concurrence is required.

There are two basic design treatments applicable to rock excavation (Figures 640-16a and 16b). Design A applies to most rock cuts. Design B is a talus slope treatment.

(a) **Design A.** This design is shown in stage development to aid the designer in selecting an appropriate section for site conditions in regard to backslope, probable rockfall, hardness of rock, and so forth.

The following guidelines apply to the various stages shown in Figure 640-16a.

- Stage 1 is used where the anticipated quantity of rockfall is small, adequate fallout width can be provided, and the rock slope is 1/2H:1V or steeper. Controlled blasting is recommended in conjunction with Stage 1 construction.
- Stage 2 is used when a "rocks in the road" problem exists or is anticipated. Consider it on flat slopes where rocks are apt to roll rather than fall.
- Stage 3 represents full implementation of all protection and safety measures applicable to rock control. Use it only when extreme rockfall conditions exist.

  Show Stage 3 as ultimate stage for future construction on the PS&E plans if there is any possibility that it will be needed.

The use of Stage 2 or 3 alternatives (concrete barrier) is based on the designer's analysis of the particular site. Considerations include maintenance, size and amount of rockfall, probable velocities, availability of materials, ditch capacity, adjacent traffic volumes, distance from traveled lane, and impact severity. Incorporate removable sections in the barrier at approximately 200 ft intervals. Appropriate terminal treatment is required (Chapter 710).

Occasionally, the existing ground above the top of the cut is on a slope approximating the design cut slope. The height (H) is to include the existing slope or that portion that can logically be considered part of the cut. The cut slope selected for a project must be that required to effect stability of the existing material.

Benches may be used to increase slope stability; however, the use of benches may alter the design requirements for the sections given in Figure 640-16a.

The necessity for benches, their width, and vertical spacing is established only after an evaluation of slope stability. Make benches at least 20 ft wide. Provide access for maintenance equipment at the lowest bench, and to the higher benches if feasible. Greater traffic benefits in the form of added safety, increased horizontal sight distance on curves, and other desirable attributes may be realized from widening a cut rather than benching.

(b) **Design B.** A talus slope treatment is shown in Design B (Figure 640-16b). The rock protection fence is placed at any one of the three locations shown but not in more than one position at a particular location. The exact placement of the rock protection fence in talus slope areas requires considerable judgment and should be determined only after consultation with the region's Materials Engineer.

- Fence position a is used when the cliff generates boulders less than 0.25 cy^3 in size, and the length of the slope is greater than 350 ft.
- Fence position b is the preferred location for most applications.
- Fence position c is used when the cliff generates boulders greater than 0.25 cy^3 in size, regardless of the length of the slope. On short slopes, this may require placing the fence less than 100 ft from the base of the cliff.
- Use of gabions may be considered instead of the rock protection shown in fence position a. However, gabion treatment is considered similar to a wall and, therefore, requires appropriate face and end protection for safety (Chapter 710).

Use of the alternate shoulder barrier is based on the designer's analysis of the particular site. Considerations similar to those given for Design A alternatives apply.

Rock protection treatments other than those described above may be required for cut slopes that have relatively uniform spalling surfaces, consult with the region's Materials Engineer.

(3) Stepped Slopes

Stepped slopes are a construction method intended to promote early establishment of vegetative cover on the slopes. They consist of a series of small horizontal steps or terraces on the face of the cut slope. Soil conditions dictate the

feasibility and necessity of stepped slopes. They are to be considered only on the recommendation of the region's Materials Engineer (Chapter 510). Consult region's landscape personnel for appropriate design and vegetative materials to be used. See Figure 640-17 for stepped slope design details.

(4) Drainage Ditches in Embankment Areas

Where it is necessary to locate a drainage ditch adjacent to the toe of a roadway embankment, consider the stability of the embankment. A drainage ditch placed immediately adjacent to the toe of an embankment slope has the effect of increasing the height of the embankment by the depth of the ditch. In cases where the foundation soil is weak, the extra height could result in an embankment failure. As a general rule, the weaker the foundation and the higher the embankment, the farther the ditch should be from the embankment. Consult the region's Materials Engineer for the proper ditch location.

When topographic restrictions exist, consider an enclosed drainage system with appropriate inlets and outlets. Do not steepen slopes to provide lateral clearance from toe of slope to ditch location, thereby necessitating traffic barriers or other protective devices.

Maintenance operations are also facilitated by adequate width between the toe of the slope and an adjacent drainage ditch. Where this type of facility is anticipated, provide sufficient right of way for access to the facility and place the drainage ditch near the right of way line.

Provide for disposition of the drainage collected by ditches in regard to siltation of adjacent property, embankment erosion, and other undesirable effects. This may also apply to cut slope top-of-slope ditches.

(5) Bridge End Slopes

Bridge end slopes are determined by several factors, including: location, fill height, depth of cut, soil stability, and horizontal and vertical alignment. Close coordination between the OSC Bridge and Structures Office and the region is necessary to ensure proper slope treatment (Chapter 1120).

Early in the preliminary bridge plan development, determine preliminary bridge geometrics, end slope rates, and toe of slope treatments. Figure 640-18a provides guidelines for use of slope rates and toe of slope treatments for overcrossings. Figure 640-18b shows toe of slope treatments to be used on the various toe conditions.

640.08 Roadway Sections

Provide a typical section for inclusion in the PS&E for each general type used on the main roadway, ramps, detours, and frontage or other roads. See the *Plans Preparation Manual* for requirements.

640.09 Documentation

The following documents are to be preserved in the project file. See Chapter 330.

- ☐ Justification for cross slopes other than 2% on tangents.
- ☐ Justification for shoulder cross slopes not the same as the cross slopes for the adjacent lane.
- ☐ Documentation of superelevation maximum rate being used and justification for a rate other than 10% maximum.
- ☐ Justification for the use of L_B on ramp curves when the minimum transition cannot be achieved.
- ☐ Documentation of the reasons for modifying an existing cut slope.
- ☐ Engineering study and recommendations for rock cuts.
- ☐ Materials Engineer recommendation for stepped slopes.
- ☐ Materials Engineer recommendation for ditch location at the toe of fill.

P65:DP/DME

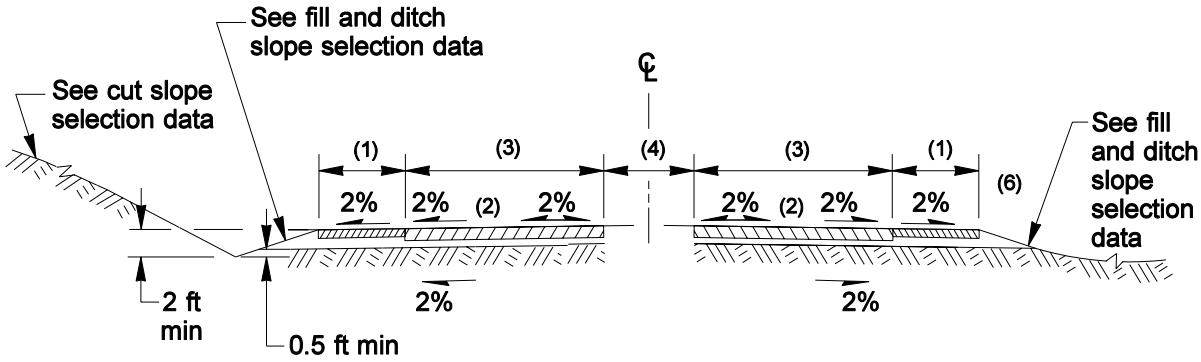

Class I, P-1, P-2, M-1

Height of fill/depth of ditch (ft)	Slope not steeper than (H:V) (5)
10	6 : 1
10 - 20	4 : 1
20 - 30	3 : 1 (6)
over 30	2 : 1 (6) (8)

Fill and Ditch Slope Selection

Height of* cut (ft)	Slope not steeper than (H:V)
0 - 5	6 : 1
5 - 20	3 : 1
over 20	2 : 1 (7)

*From bottom of ditch

Cut Slope Selection (9)

Notes:

(1) See Figures 640-10a and 10b for shoulder details. See Chapter 440 for minimum shoulder width.

(2) Generally, the crown slope will be as follows:
- Four-lane highway — slope all lanes away from the median.
- Six-lane highway — slope all lanes away from the median unless high rainfall intensities would indicate otherwise.
- Eight-lane highway — slope two of the four directional lanes to the right and two to the left unless low rainfall intensities indicate that all four lanes could be sloped away from the median.

(3) See Chapter 440 for minimum number and width of lanes. See Figures 640-8a and 8b and 640.04(2) for turning roadway width.

(4) See Figures 640-15a through 15c for median details. See Chapter 440 for minimum median width.

(5) Where practical, consider flatter slopes for the greater fill heights and ditch depths.

(6) Widen and round foreslopes steeper than 4H:1V as shown on Figure 640-10b.

(7) Cut slopes steeper than 2H:1V may be used where favorable soil conditions exist or stepped construction is used. See Chapter 700 for clear zone and barrier requirements.

(8) Fill slopes as steep as 1½H:1V may be used where favorable soil conditions exist. See Chapter 700 for clear zone and barrier requirements.

(9) This table is for preliminary estimates or where no other information is available. Design the final slope as recommended in the geotechnical report. Do not disturb existing stable slopes just to meet the slopes given in this table.

Divided Highway Roadway Sections
Figure 640-3

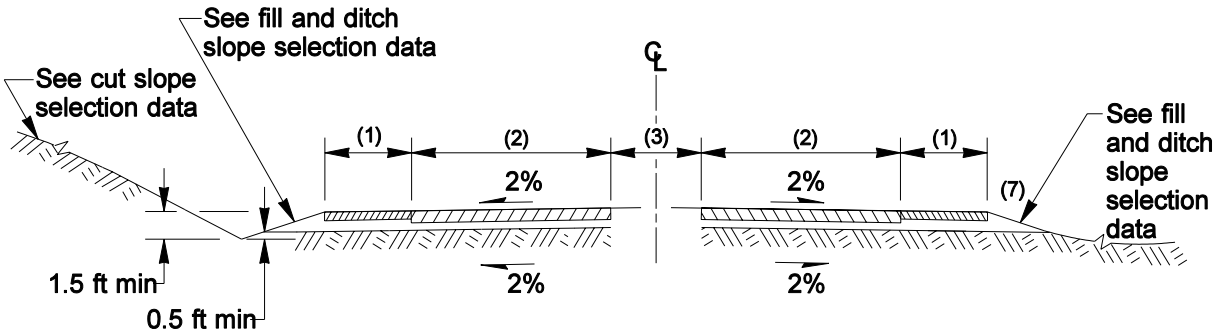

Class P-6, M-5, C-1

Height of fill/depth of ditch (ft)	Slope not steeper than (H:V) (4)
0 - 5	6 : 1
5 - 20	4 : 1
20 - 30	3 : 1 (7)
over 30	2 : 1 (6) (7)

Fill and Ditch Slope Selection

Height of* cut (ft)	Slope not steeper than (H:V)
0 - 5	4 : 1
over 5	2 : 1 (5)

* From bottom of ditch

Cut Slope Selection (8)

Notes:

(1) See Figures 640-10a and 10b for shoulder details. See Chapter 440 for minimum shoulder width.

(2) See Chapter 440 for minimum number and width of lanes. See Figures 640-7a and 7b and 640.04(2) for turning roadway width.

(3) See Chapter 440 for minimum median width.

(4) Where practical, consider flatter slopes for the greater fill heights and ditch depths.

(5) Cut slopes steeper than 2H:1V may be used where favorable soil conditions exist or stepped construction is used. See Chapter 700 for clear zone and barrier requirements.

(6) Fill slopes up to $1^1/_2$H:1V may be used where favorable soil conditions exist. See Chapter 700 for clear zone and barrier requirements.

(7) Widen and round foreslopes steeper than 4H:1V as shown on Figure 640-10b.

(8) This table is for preliminary estimates or where no other information is available. Design the final slope as recommended in the geotechnical report. Do not disturb existing stable slopes just to meet the slopes given in this table.

Undivided Multilane Highway Roadway Sections
Figure 640-4

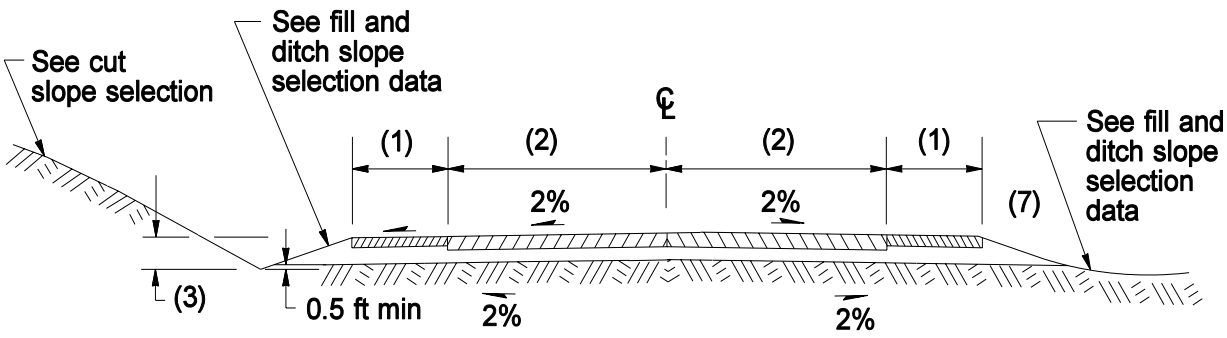

Design Class P-3, P-4, P-5, M-2, M-3, M-4, C-2, C-3, C-4

Design class of highway	P-3, P-4, M-2, C-2	P-5, M-3, M-4, C-3, C-4
Height of fill/depth of ditch (ft)	Slope not steeper than (H:V)(4)	
0 - 10	6 : 1	4 : 1
10 - 20	4 : 1	4 : 1
20 - 30	3 : 1 (7)	3 : 1 (7)
over 30	2 : 1 (5) (7)	2 : 1 (5) (7)

Fill and Ditch Slope Selection

Design class of highway	P-3, P-4, M-2, C-2	P-5, M-3, M-4, C-3, C-4
Height of cut (ft)*	Slope not steeper than (H:V)	
0 - 5	6 : 1	4 : 1
5 - 20	3 : 1	2 : 1 (6)
over 20	2 : 1 (6)	2 : 1 (6)

*From bottom of ditch

Cut Slope Selection (8)

Notes:

(1) See Figures 640-10a and 10b for shoulder details. See Chapter 440 for minimum shoulder width.

(2) See Chapter 440 for minimum width of lanes. See Figures 640-7a and 7b and 640.04(2) for turning roadway width.

(3) The minimum ditch depth is 2 ft for Design Class P-3 and 1.5 ft for Design Class P-4, P-5, M-2, M-3, M-4, C-2, C-3, and C-4.

(4) Where practical, consider flatter slopes for the greater fill heights.

(5) Fill slopes up to $1^1/_2$H:1V may be used where favorable soil conditions exist. See Chapter 700 for clear zone and barrier requirements.

(6) Cut slopes steeper than 2H:1V may be used where favorable soil conditions exist or stepped construction is used. See Chapter 700 for clear zone and barrier requirements.

(7) Widen and round foreslopes steeper than 4H:1V, as shown on Figure 640-10b.

(8) This table is for preliminary estimates or where no other information is available. Design the final slope as recommended in the geotechnical report. Do not disturb existing stable slopes just to meet the slopes given in this table.

Two-Lane Highway Roadway Sections
Figure 640-5

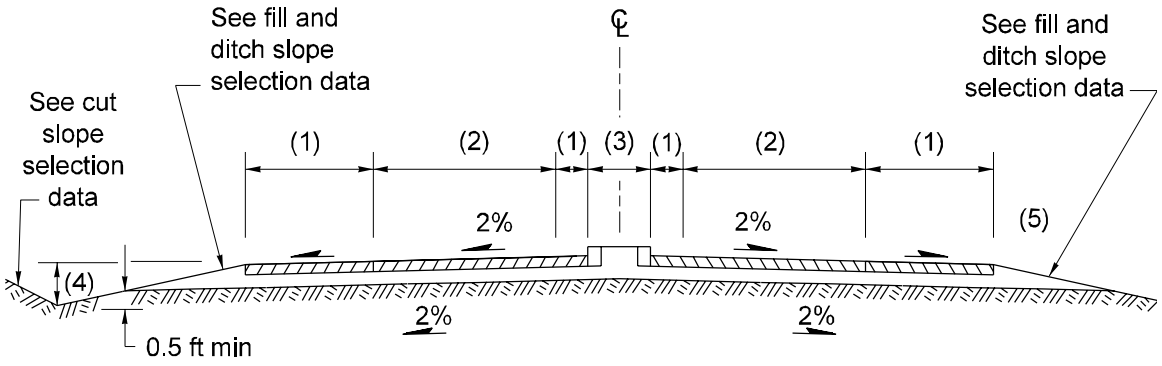

Two-Lane Two-Way Ramp

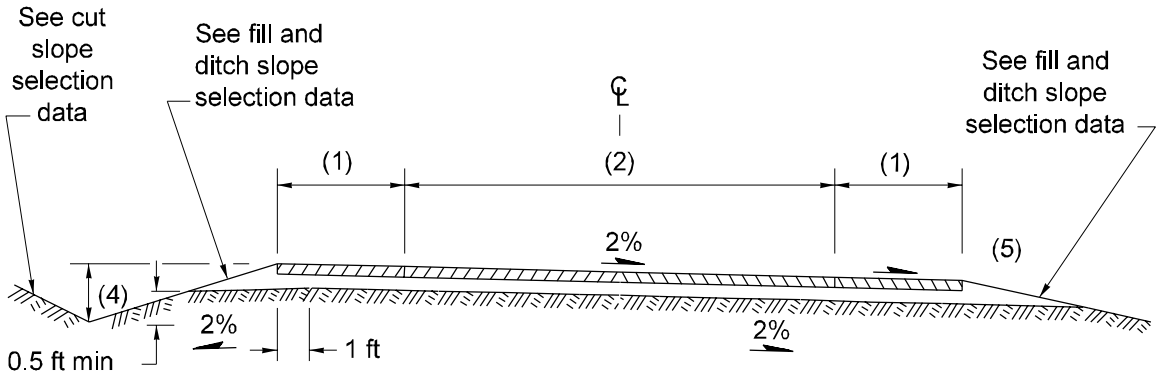

Two-Lane One-Way Ramp

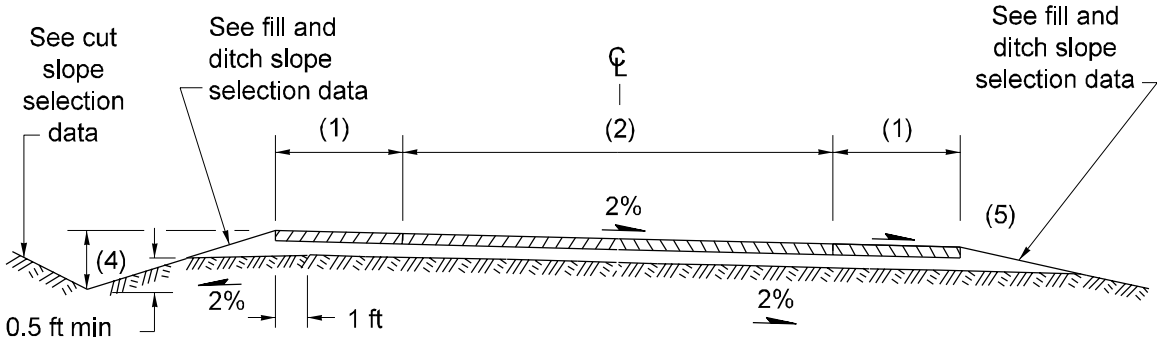

One-Lane Ramp

For notes, dimensions, and slope selection tables see Figure 640-6b

Ramp Roadway Sections
Figure 640-6a

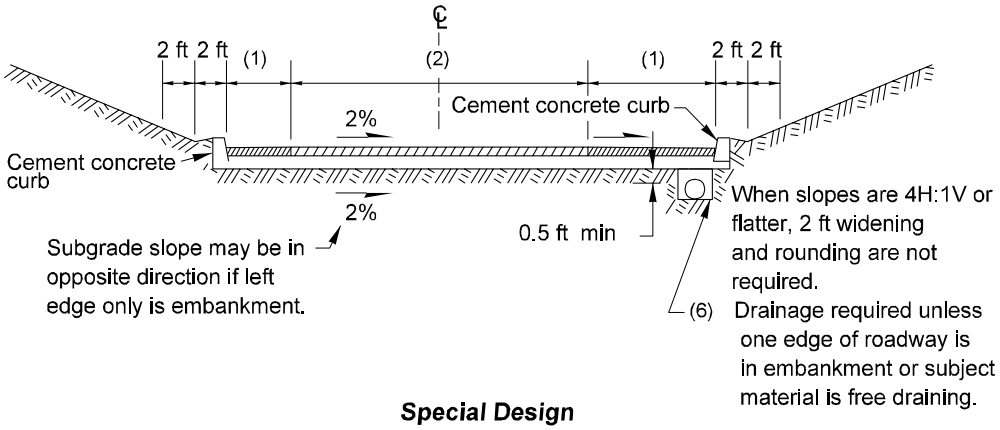

Special Design

This special design is to be used only when restrictions (high right of way costs or physical features that are difficult or costly to correct) require its consideration.

Height of fill/depth of ditch (ft)	Slope not steeper than (H:V) (7)
0 - 10	6 : 1
10 - 20	4 : 1
20 - 30	3 : 1 (5)
over 30	2 : 1 (5) (9)

Fill and Ditch Slope Selection

Height of cut (ft)*	Slope not steeper than (H:V)
0 - 5	6 : 1
5 - 20	3 : 1
over 20	2 : 1 (8)

*From bottom of ditch

Cut slope Selection (10)

(1) See Figures 640-10a and 10b for shoulder details. See Chapter 940 for minimum shoulder widths.

(2) See Chapter 940 for minimum ramp lane widths.
- For one-lane ramp turning roadways see Figures 640-9a thru 9c for traveled way width.
- For two-lane one-way ramp turning roadways, see Figures 640-8a & 8b for traveled way width.
- For two-way ramps treat each direction as a separate one-way roadway.

(3) The minimum median width of a two-lane, two-way ramp is not less than that required for traffic control devices and their respective clearances.

(4) Minimum ditch depth is 2 ft for design speeds over 40 mph and 1.5 ft for design speeds of 40 mph or less. Rounding may be varied to fit drainage requirements when minimum ditch depth is 2 ft.

(5) Widen and round foreslopes steeper than 4H:1V as shown on Figure 640-10b.

(6) Method of drainage pickup to be determined by the designer.

(7) Where practical, consider flatter slopes for the greater fill heights and ditch depths.

(8) Cut slopes steeper than 2H:1V may be used where favorable soil conditions exist or stepped construction is used. See Chapter 700 for clear zone and barrier requirements.

(9) Fill slopes as steep as 1½H:1V may be used where favorable soil conditions exist. See Chapter 700 for clear zone and barrier requirements.

(10) This table is for preliminary estimates or where no other information is available. Design the final slope as recommended in the geotechnical report. Do not disturb existing stable slopes just to meet the slopes given in this table.

Ramp Roadway Sections
Figure 640-6b

Radius on center line of traveled way (ft)	Design traveled way width (W) (ft)
3,000 to tangent	24
2,999	25
2,000	26
1,000	27
800	28
700	28
600	29
500	29
400	30
350	31
300	32
250	34
200	36
150	40

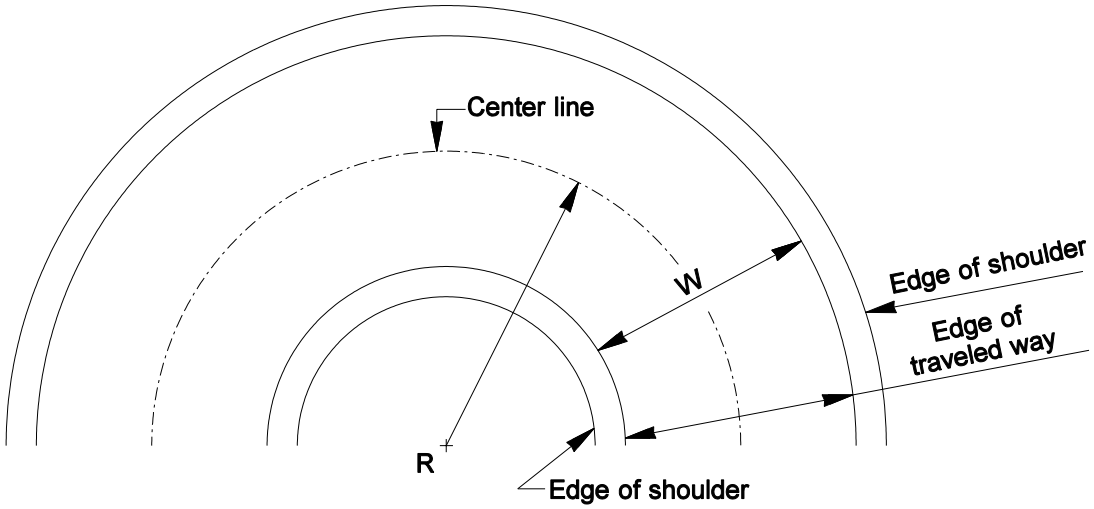

Traveled Way Width for Two-Way Two-Lane Turning Roadways
Figure 640-7a

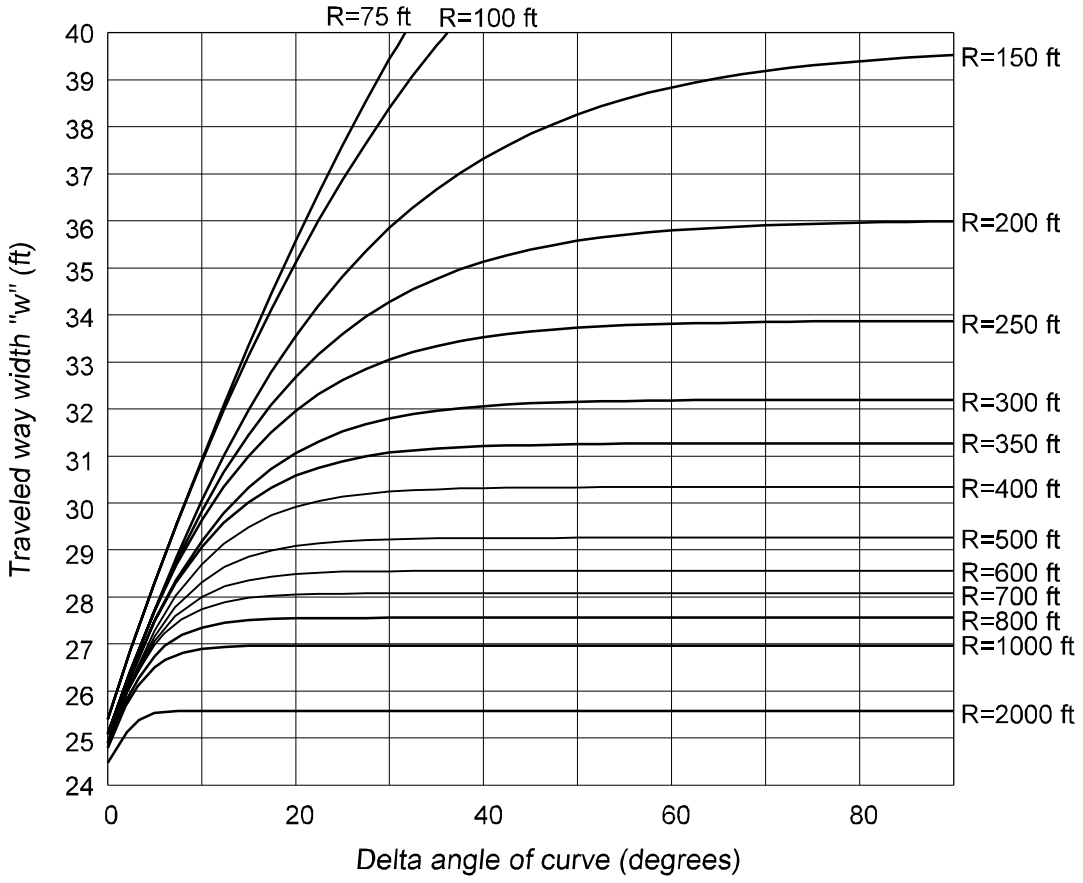

Traveled Way Width for Two-Way Two-Lane Turning Roadways
Figure 640-7b

Radius on center line of traveled way (ft)	Design traveled way width (W) (ft)
3,000 to tangent	24
1,000 to 2,999	25
999	26
600	26
500	27
400	27
350	28
300	28
250	29
200	29
150	31
100	34

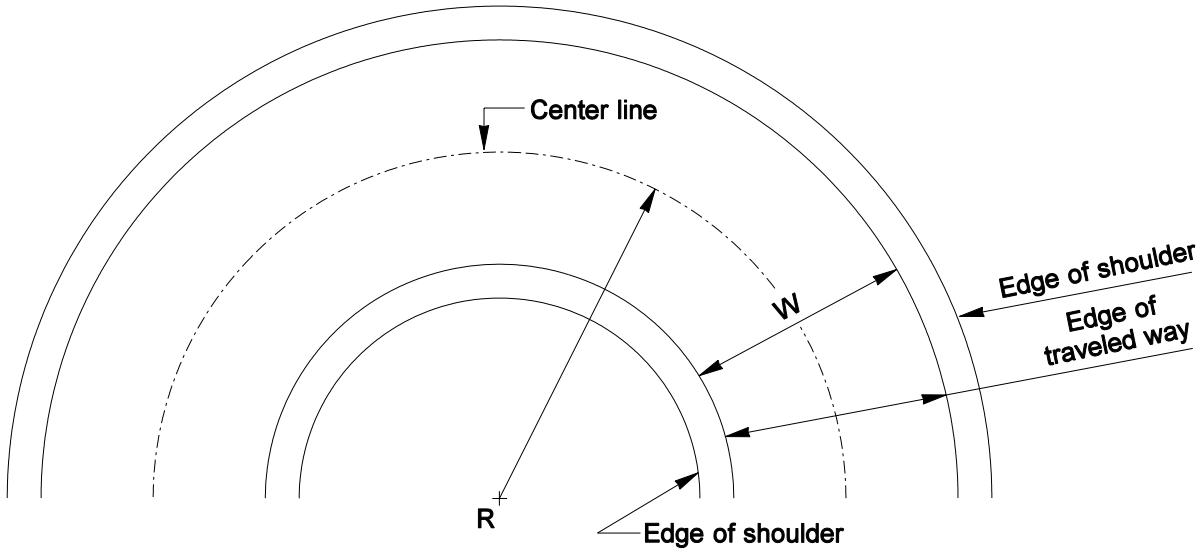

Traveled Way Width for Two-Lane One-Way Turning Roadways
Figure 640-8a

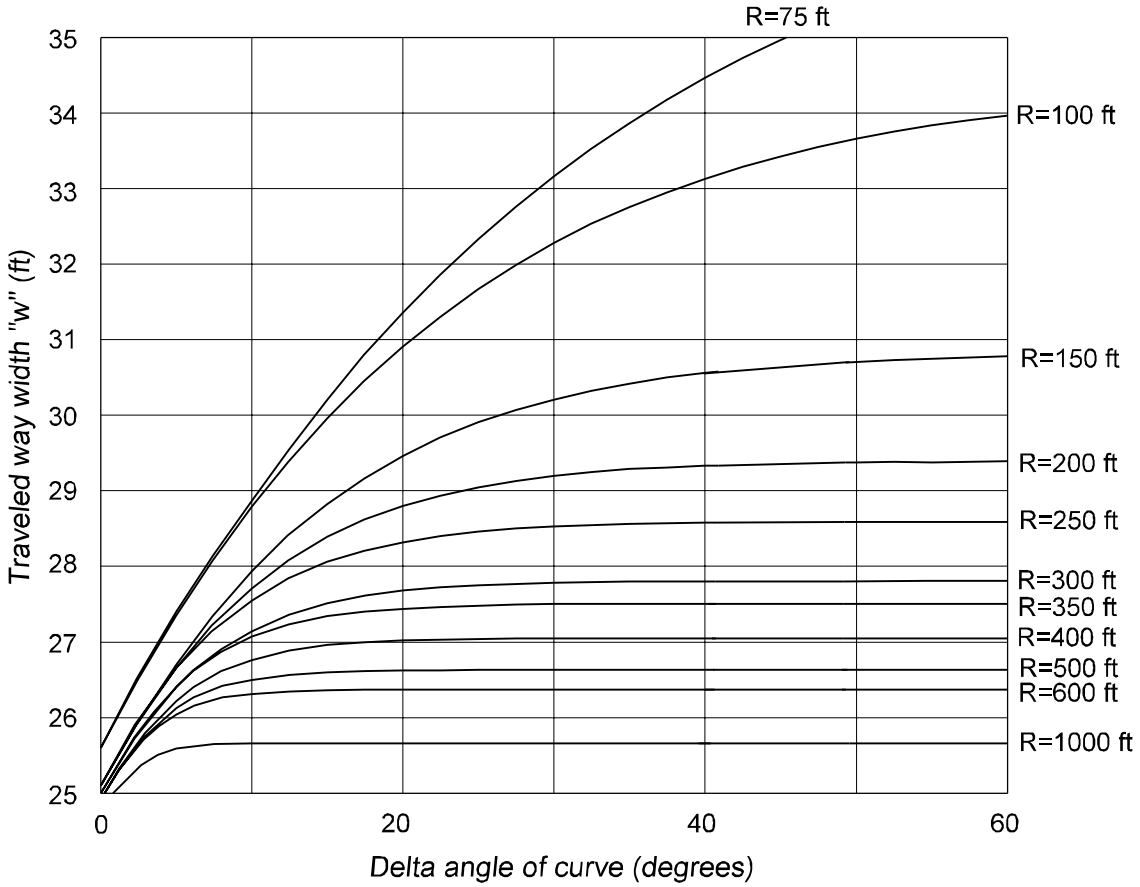

Traveled Way Width for Two-Lane One-Way Turning Roadways
Figure 640-8b

Radius (ft)	Design traveled way width (W) (ft)
300 to tangent	15(1)
299	16
250	16
200	17
165	17.5
130	18(2)
100	19(3)
75	21(4)

(1) On tangents, the minimum lane width may be reduced to 12 ft.

(2) The width given is for a radius on the outside edge of the traveled way. When the radius is on the inside edge of traveled way, the width may be 17.7 ft.

(3) The width given is for a radius on the outside edge of the traveled way. When the radius is on the inside edge of traveled way, the width may be 18 ft.

(4) The width given is for a radius on the outside edge of the traveled way. When the radius is on the inside edge of traveled way, the width may be 19 ft.

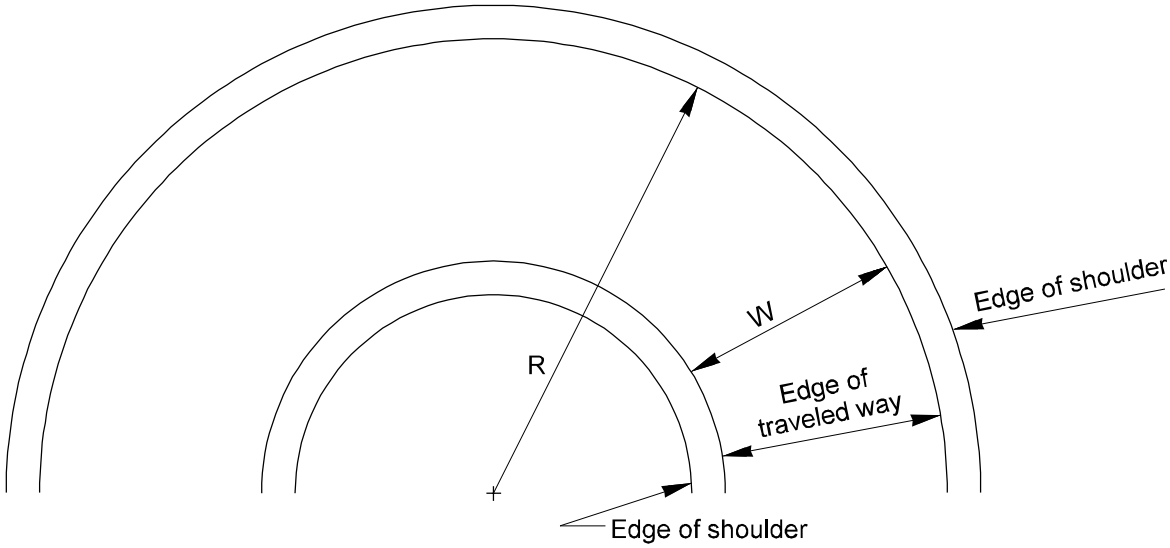

Traveled Way Width for One-Lane Turning Roadways
Figure 640-9a

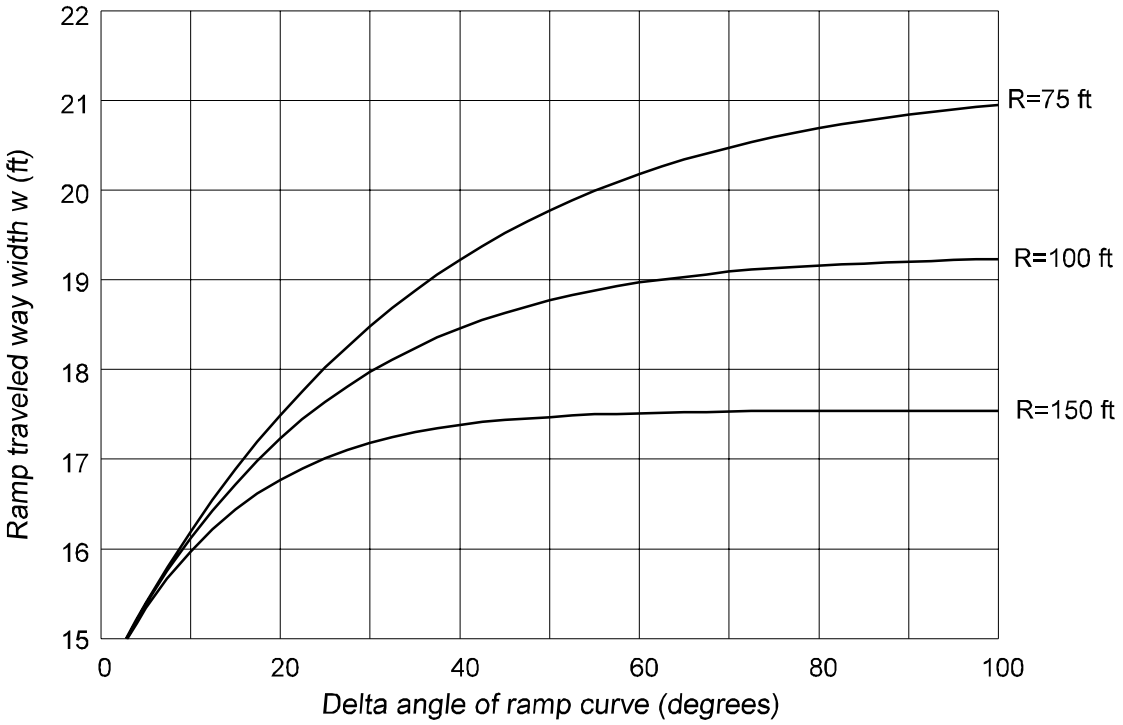

NOTE: All Radii are to the outside edge of traveled way.

Traveled Way Width for One-Lane Turning Roadways
Figure 640-9b

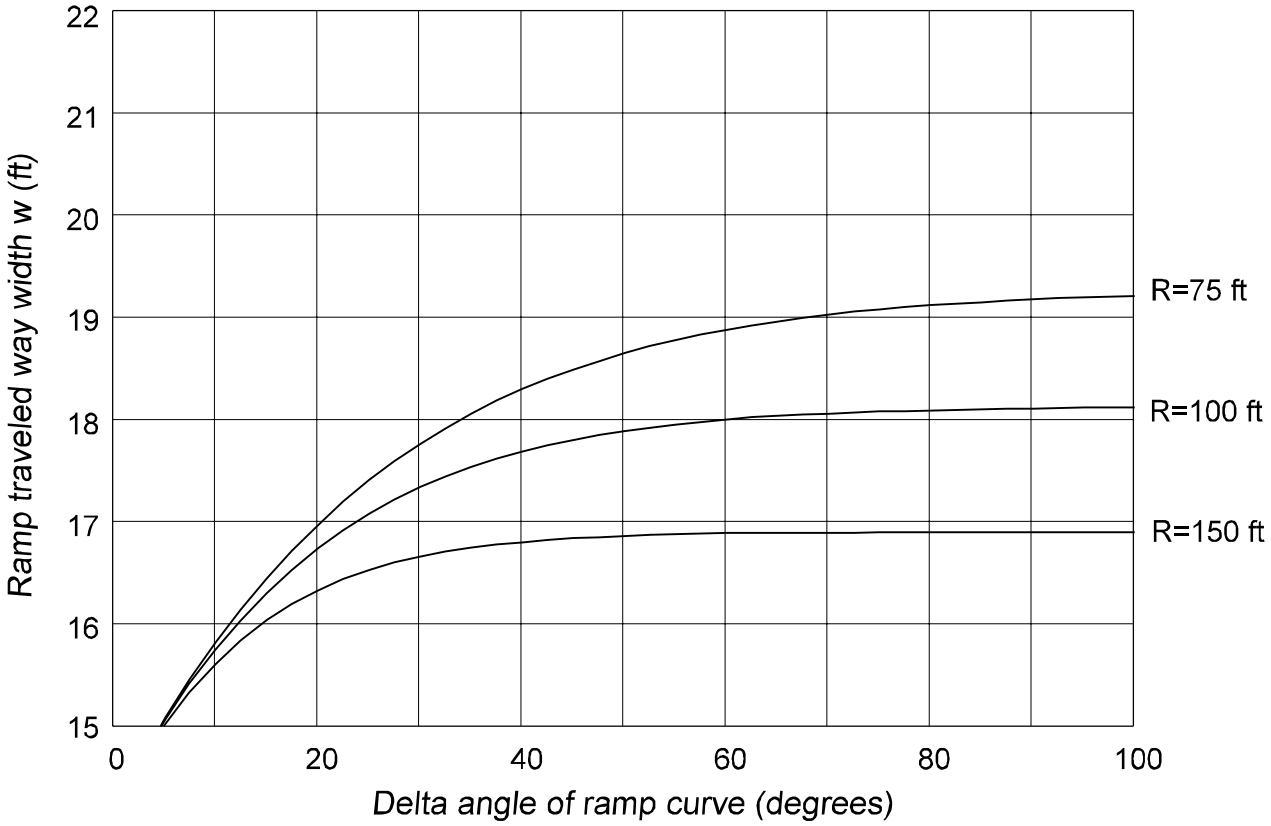

NOTE: All Radii are to the inside edge of traveled way.

Traveled Way Width for One-Lane Turning Roadways
Figure 640-9c

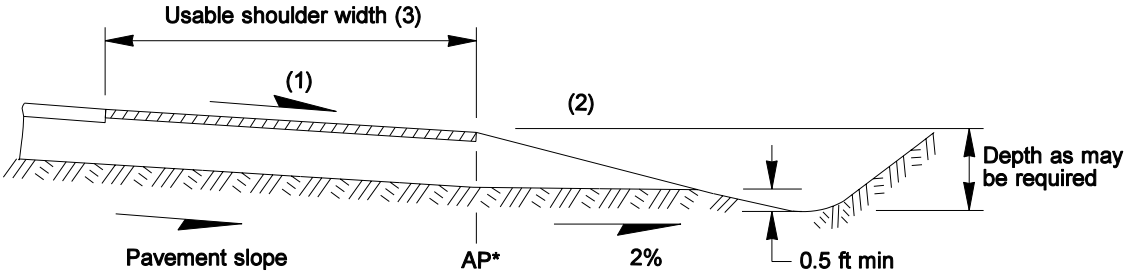

Shoulder Design on the Low Side of the Roadway for Cross Slopes Greater Than 2%

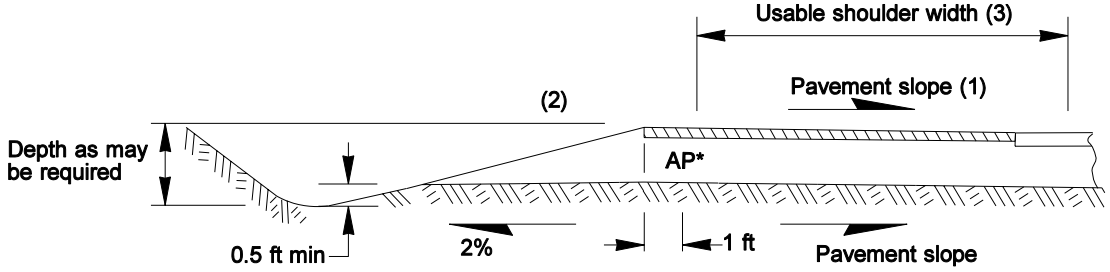

Shoulder Design on the High Side of the Roadway on Curves and Divided Roadways Shoulder Slopes with Roadway

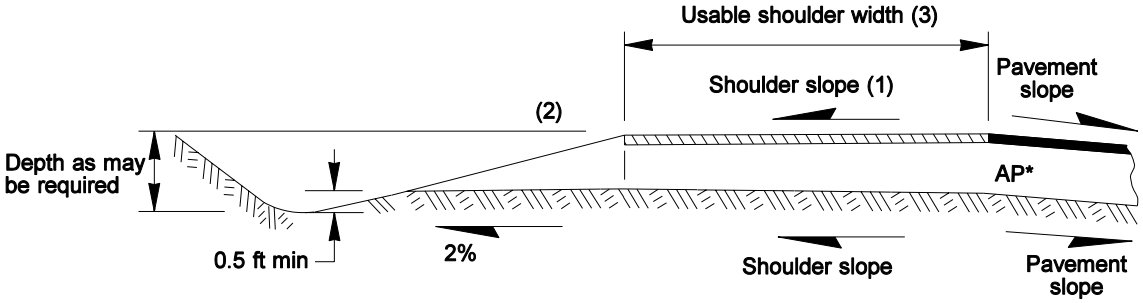

Shoulder Design on the High Side of the Roadway on Curves and Divided Roadways Away from Roadway

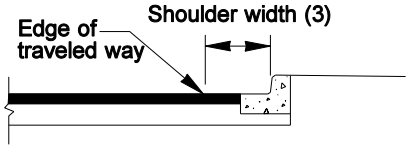

Shoulder Design with Curb(5) (6)

* AP = angle point in the subgrade.
For notes, see Figure 640-10b

Shoulder Details
Figure 640-10a

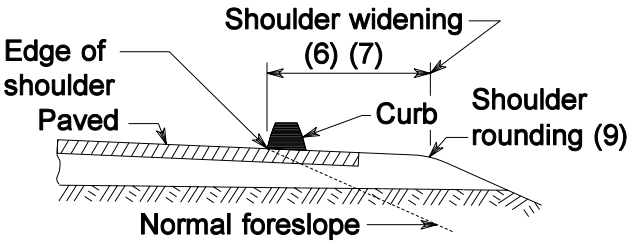

Asphalt Concrete Curb Placement

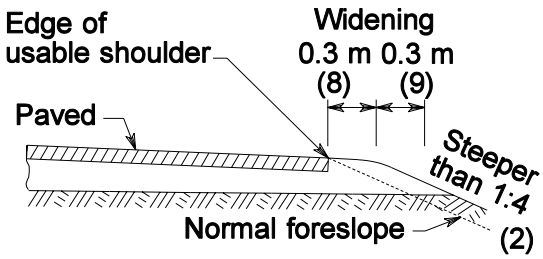

Shoulder Rounding

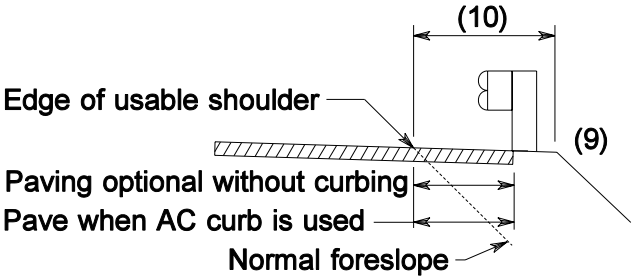

Shoulder Widening for Guardrail

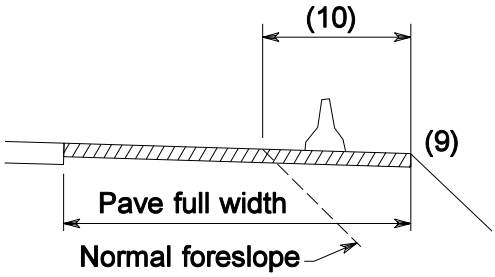

Shoulder Widening for Barrier

Notes:

(1) Shoulder cross slopes are normally the same as the cross slopes for adjacent lanes. See 640.04(3) in the text for examples, additional information, and requirements of locations where it may be desirable to have a shoulder cross slope different than the adjacent lane.

(2) Widening and shoulder rounding outside the usable shoulder is required when foreslope is steeper than 4H:1V.

(3) See Chapter 440 for shoulder width.

(4) On divided multilane highways see Figures 640-15a and 15c or additional details and requirements for median shoulders.

(5) See Chapter 1025 for additional requirements for sidewalks.

(6) It is preferred that curb not be used on high speed facilities (posted speed >40 mph).

(7) Paved shoulders are required wherever asphalt concrete curb is placed. Use it only where necessary to control drainage from roadway runoff. See the Standard Plans for additional details and dimensions.

(8) When rounding is required, use it uniformly on all ramps and crossroads, as well as the main roadway.

End rounding on the crossroad just beyond the ramp terminals and at a similar location where only a grade separation is involved.

(9) When widening beyond the edge of usable shoulder is required for asphalt concrete curb, barrier, or other purposes, additional widening for shoulder rounding is not required.

(10) See Chapter 710 for required widening for guardrail and concrete barrier.

Shoulder Details
Figure 640-10b

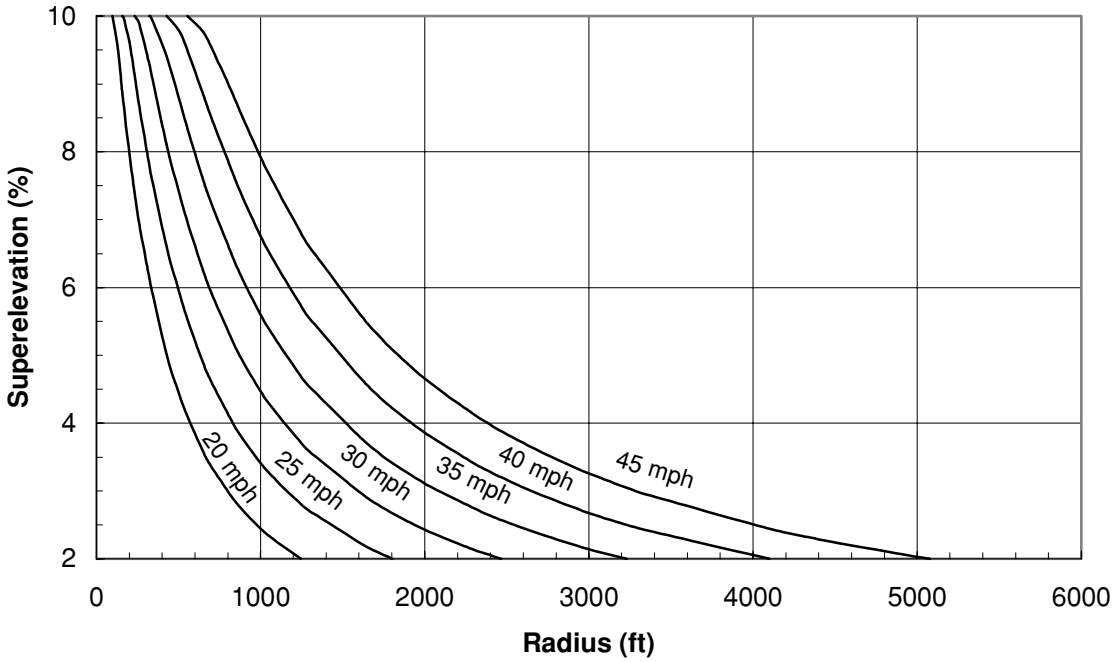

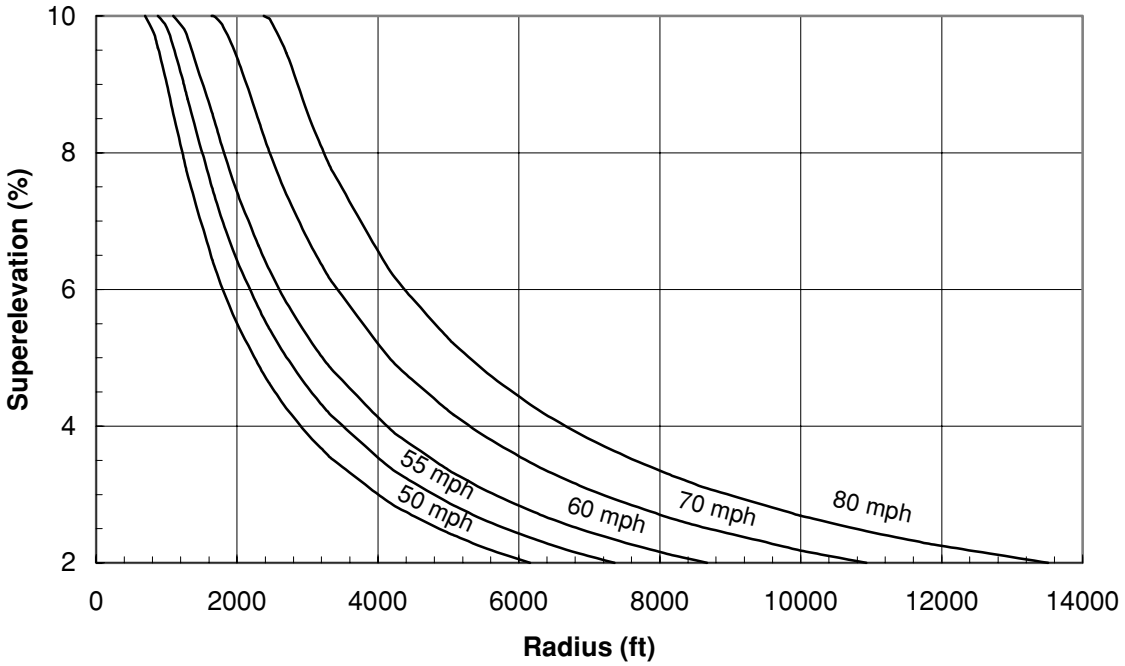

Design Speed (mph)	20	25	30	35	40	45	50	55	60	70	80
Minimum Radius (ft)	100	160	240	330	430	560	700	880	1100	1640	2380

Superelevation Rates (10% max)
Figure 640-11a

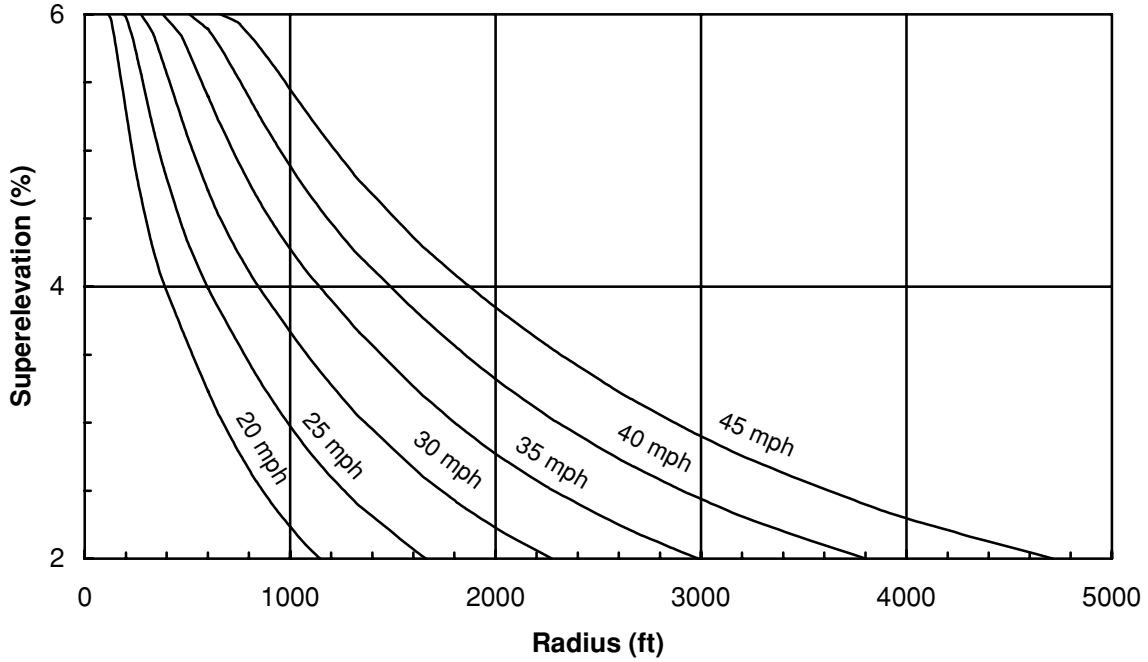

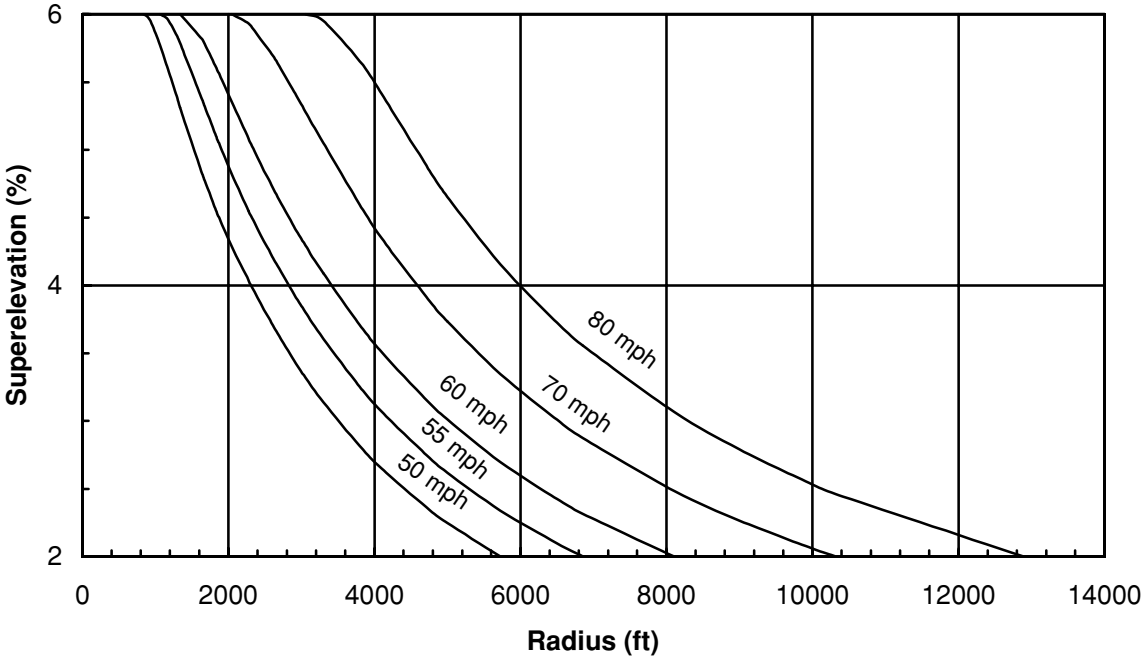

Design Speed (mph)	20	25	30	35	40	45	50	55	60	70	80
Minimum Radius (ft)	120	190	280	390	510	670	840	1070	1340	2050	3060

Superelevation Rates (6% max)
Figure 640-11b

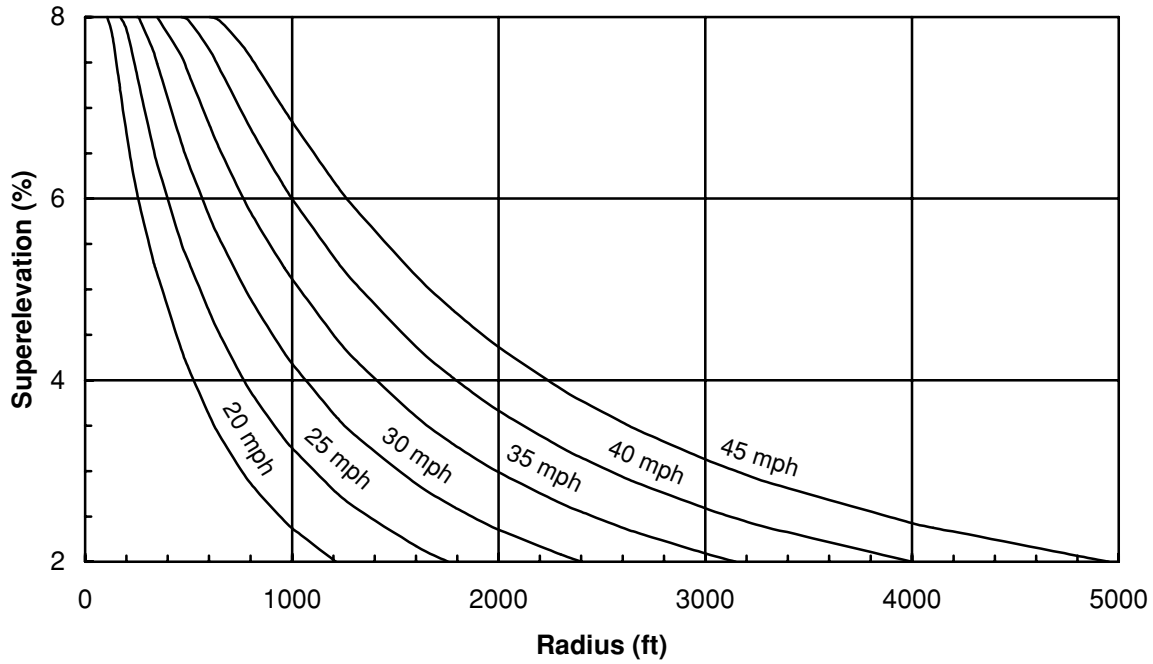

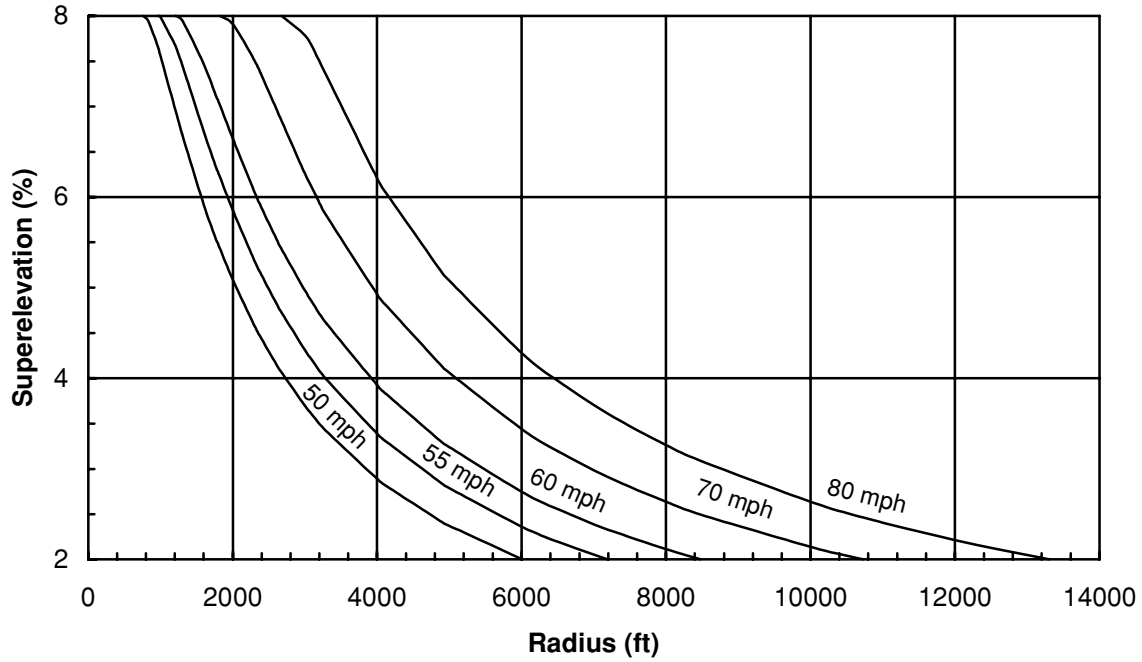

Design Speed (mph)	20	25	30	35	40	45	50	55	60	70	80
Minimum Radius (ft)	110	180	260	350	470	610	770	970	1210	1830	2680

Superelevation Rates (8% max)

Figure 640-11c

Curve Radius (ft)	Range in Superelevation Rates (%) for Design Speed of:					
	15 mph	20 mph	25 mph	30 mph	35 mph	40 mph
50	2 - 10					
90	2 - 7	2 - 10				
150	2 - 5	2 - 8	4 - 10			
230	2 - 4	2 - 6	3 - 8	6 - 10		
310	2 - 3	2 - 4	3 - 6	5 - 9	8 - 10	
430	2 - 3	2 - 3	3 - 5	4 - 7	6 - 9	9 - 10
600	2	2 - 3	2 - 4	3 - 5	5 - 7	7 - 9
1,000	2	2 - 3	2 - 3	3 - 4	4 - 5	5 - 6
1,500	2	2	2	2 - 3	3 - 4	4 - 5
2,000	2	2	2	2	2 - 3	3 - 4
3,000	2	2	2	2	2	2 - 3

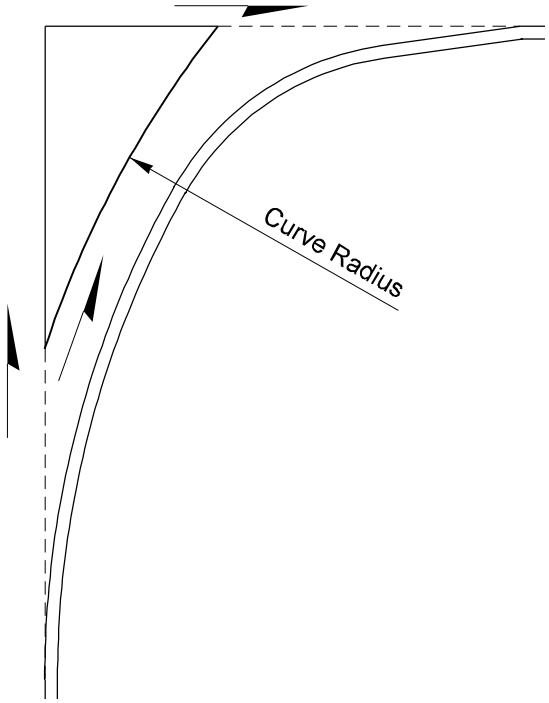

Superelevation Rates for Turning Roadways at Intersections
Figure 640-12

S	*L_B=Basic runoff in feet for Design Speed of:										
%	20 mph	25 mph	30 mph	35 mph	40 mph	45 mph	50 mph	55 mph	60 mph	70 mph	80 mph
2	35	35	35	40	45	45	45	50	55	60	65
3	50	50	55	60	65	65	70	75	80	90	100
4	65	70	70	75	85	90	95	100	105	120	130
5	80	85	90	95	105	110	120	125	130	150	165
6	95	100	105	115	125	135	140	150	160	180	200
7	110	120	125	135	145	155	165	180	185	210	230
8	125	135	145	155	165	180	190	200	210	235	265
9	140	150	160	175	190	200	215	225	235	265	295
10	160	170	180	195	210	225	235	255	265	295	330

*Based on one 12 ft lane between the pivot point and the edge of traveled way. When the distance exceeds 12 ft use the following equation to obtain L_R:

$L_R=L_B(1+0.04167X)$

Where:

X = The distance in excess of 12 ft between the pivot point and the furthest edge of traveled way, in feet

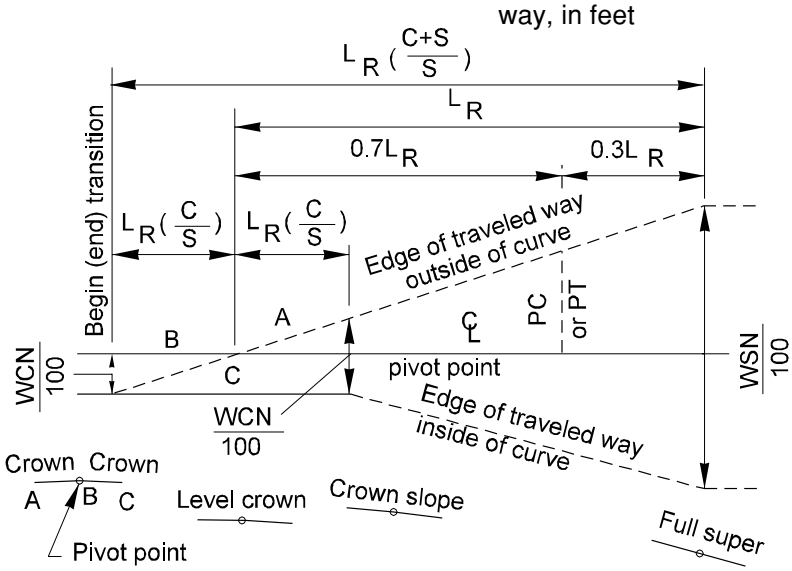

Design A Pivot Point on
Center Line Crowned Section

C = Normal crown(%)
S = Superelevation rate (%)
N = Number of lanes between points
W = Width of lane

Superelevation Transitions for Highway Curves
Figure 640-13a

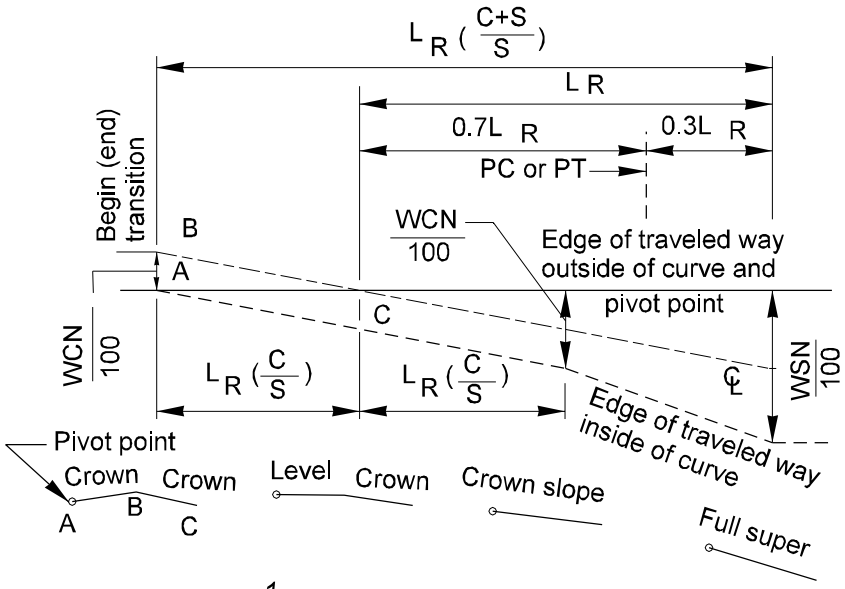

Design B[1] Pivot Point on Edge of Pavement Outside of Curve Crowned Section

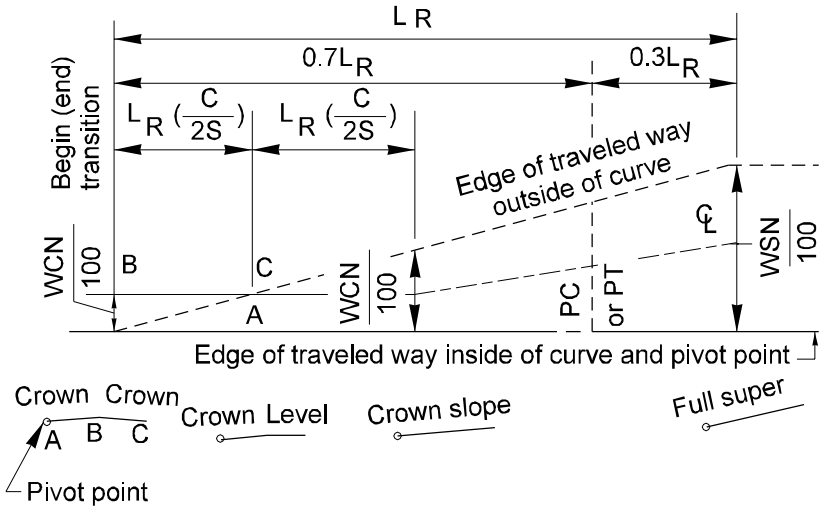

Design B[2] Pivot Point on Edge of Pavement Inside of Curve Crowned Section

C = Normal crown(%)
S = Superelevation rate (%)
N = Number of lanes between points
W = Width of lane

Superelevation Transitions for Highway Curves
Figure 640-13b

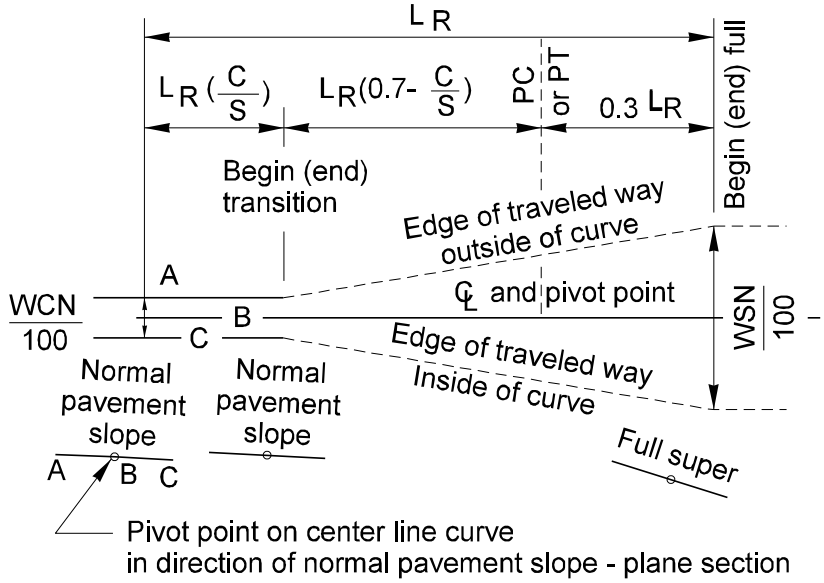

Design C[1]

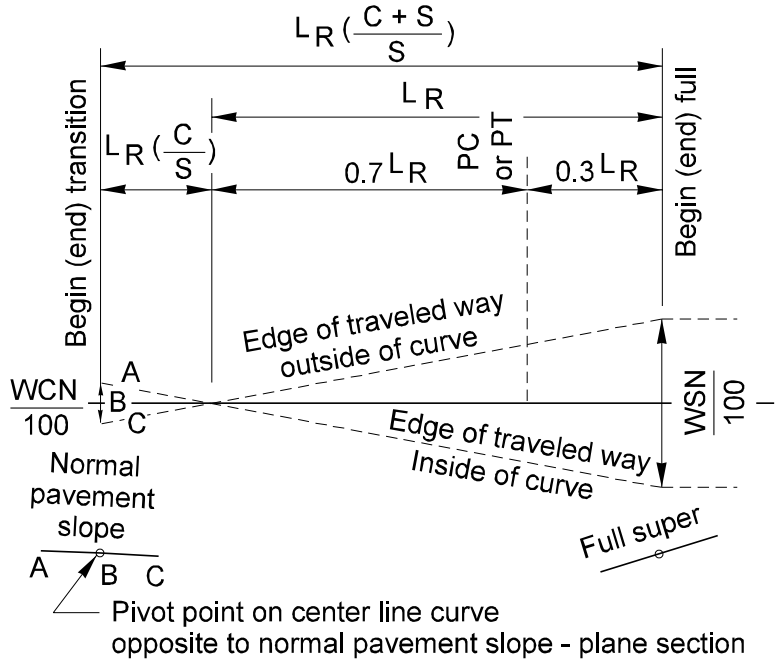

Design C[2]

C = Normal crown(%)
S = Superelevation rate (%)
N = Number of lanes between points
W = Width of lane

Superelevation Transitions for Highway Curves
Figure 640-13c

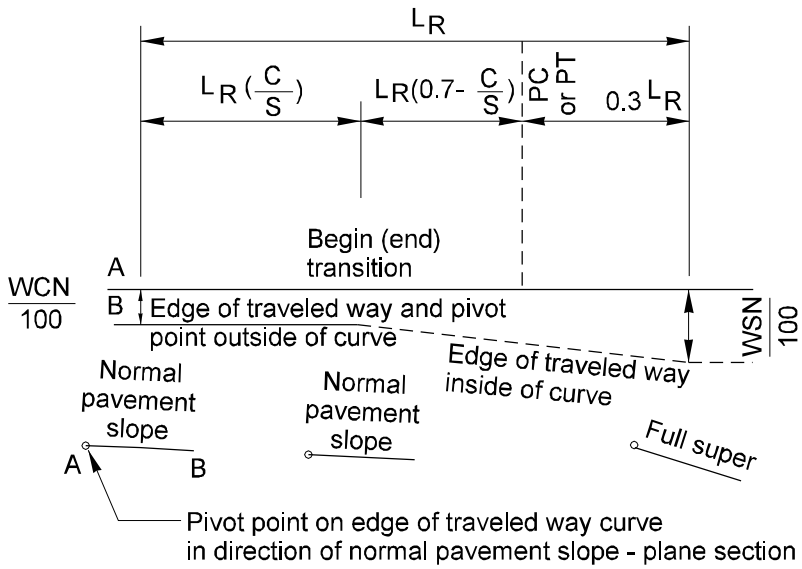

Design D[1]

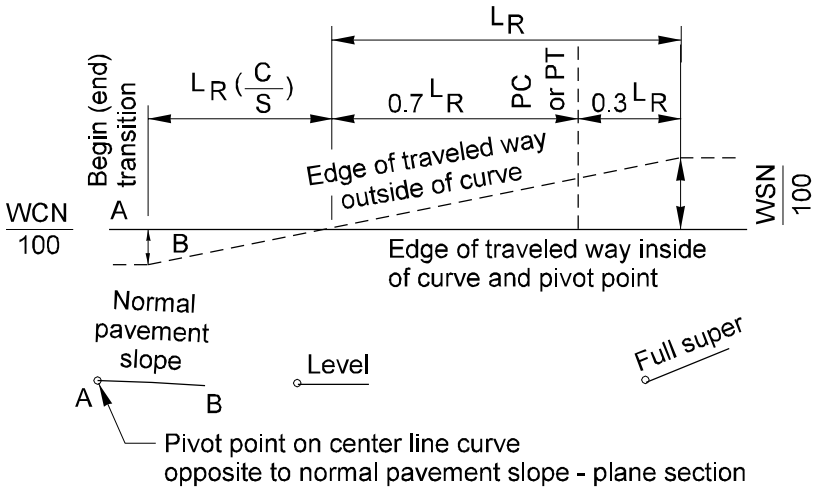

Design D[2]

C = Normal crown(%)
S = Superelevation rate (%)
N = Number of lanes between points
W = Width of lane

Superelevation Transitions for Highway Curves
Figure 640-13d

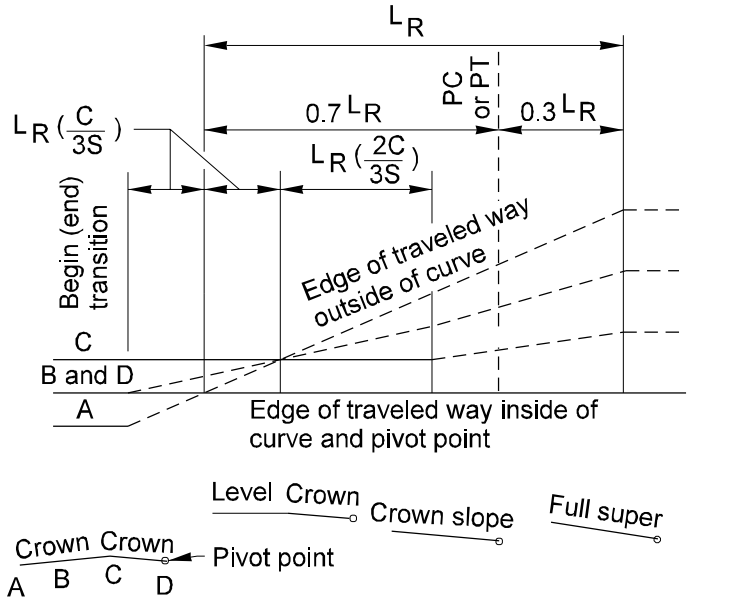

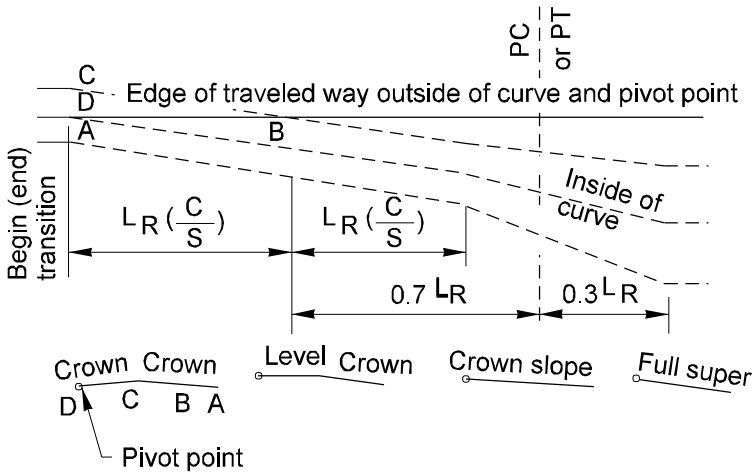

Transition profiles for typical six lanes with median

Design E

C = Normal crown(%)
S = Superelevation rate (%)
N = Number of lanes between points
W = Width of lane

Superelevation Transitions for Highway Curves

Figure 640-13e

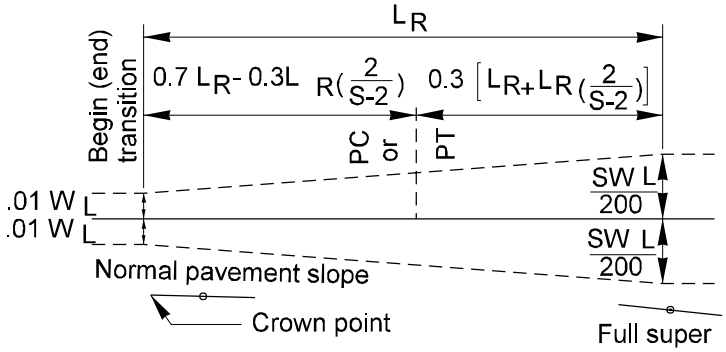

S (%)	Length of transition in feet for Design Speed of: 20 mph L_B	25 mph L_B	30 mph L_B	35 mph L_B	40 mph L_B	45 mph L_B	50 mph L_B	≥ 55 mph L_B
3	10	15	15	15	15	15	15	15
4	20	25	25	25	25	30	30	35
5	30	35	35	35	40	45	45	50
6	40	45	45	50	55	55	60	65
7	50	55	55	60	65	70	75	80
8	60	65	70	75	80	85	90	95
9	70	75	80	85	95	100	105	110
10	80	85	90	100	105	115	120	130

Table 1 Pivot Point on Center Line — Curve in Direction of Normal Pavement Slope

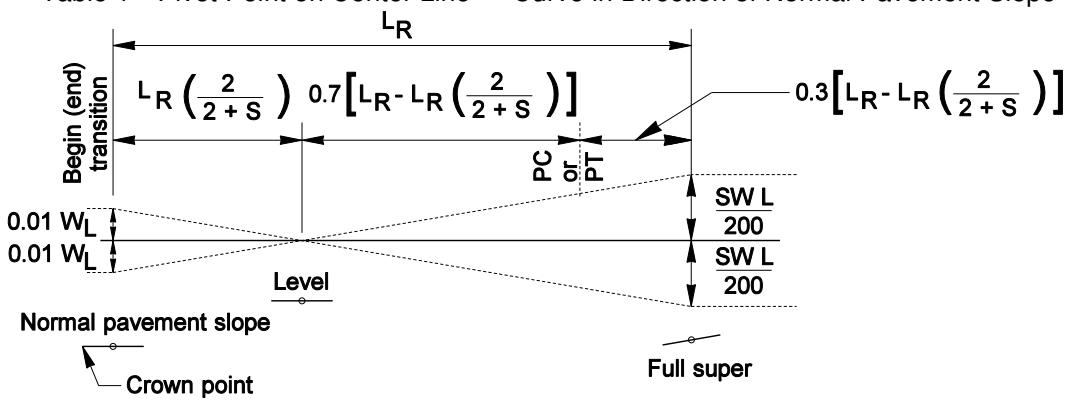

S (%)	Length of transition in feet for Design Speed of: 20 mph L_B	25 mph L_B	30 mph L_B	35 mph L_B	40 mph L_B	45 mph L_B	50 mph L_B	≥ 55 mph L_B
2	40	40	45	50	55	55	60	65
3	50	55	55	60	65	70	75	80
4	60	65	70	75	80	85	90	95
5	70	75	80	85	90	100	105	110
6	80	85	90	95	105	115	120	130
7	90	95	100	110	120	125	135	145
8	100	105	115	120	130	140	150	160
9	110	120	125	135	145	155	165	175
10	120	130	135	145	160	170	180	190

Table 2 Pivot Point on Center Line — Curve in Direction Opposite to Normal Pavement Slope

$L_R = L_B * (1 + 0.04167x)$ Where: x = width of lane greater than 15 ft.
W_L = width of ramp lane

Superelevation Transitions for Ramp Curves
Figure 640-14a

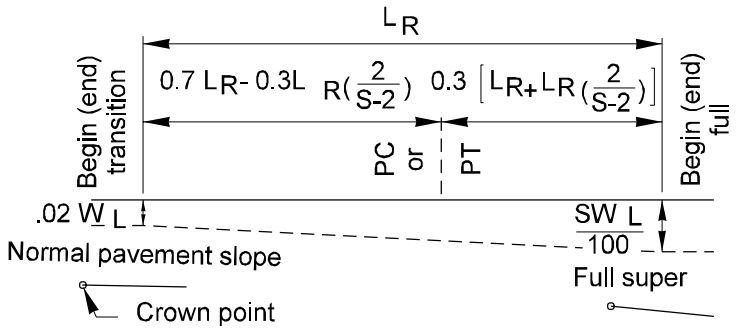

S	Length of transition in feet for Design Speed of:							
	20 mph	25 mph	30 mph	35 mph	40 mph	45 mph	50 mph	≥ 55 mph
(%)	L_B	L_B	L_B	L_B	L_B	L_B	L_B	L_B
3	20	25	25	25	25	30	30	35
4	40	45	45	50	55	55	60	65
5	60	65	70	75	80	85	90	95
6	80	85	90	100	105	115	120	130
7	100	105	115	120	130	140	150	160
8	120	130	135	145	160	170	180	190
9	140	150	160	170	185	195	210	225
10	160	170	180	195	210	225	240	255

Table 3 Pivot Point on Edge of Lane — Curve in Direction of Normal Pavement Slope

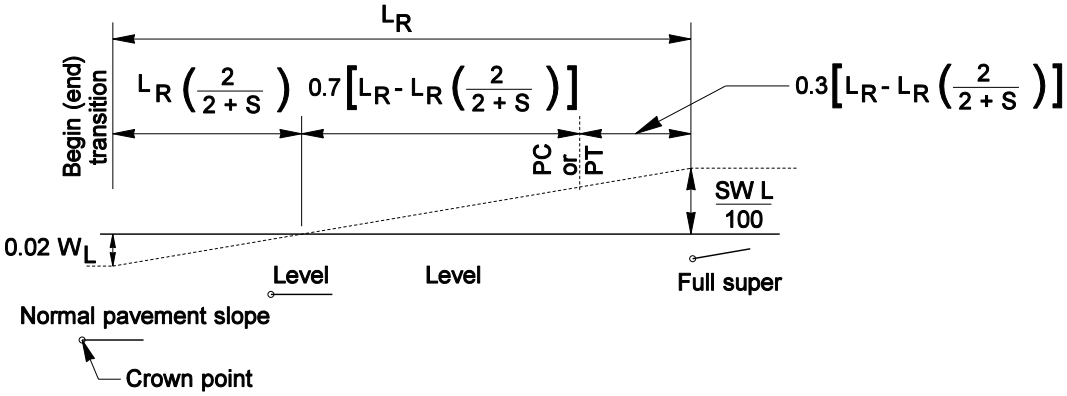

S	Length of transition in feet for Design Speed of:							
	20 mph	25 mph	30 mph	35 mph	40 mph	45 mph	50 mph	≥ 55 mph
(%)	L_B	L_B	L_B	L_B	L_B	L_B	L_B	L_B
2	80	85	90	100	105	115	120	130
3	100	105	115	120	130	140	150	160
4	120	130	135	145	160	170	180	190
5	140	150	160	170	185	195	210	225
6	160	170	180	195	210	225	240	255
7	180	190	205	220	235	255	270	290
8	200	210	225	245	265	280	300	320
9	220	235	250	265	290	310	330	350
10	240	255	270	290	315	340	360	385

Table 4 Pivot Point on Edge of Lane — Curve in Direction Opposite to Normal Pavement Slope

$L_R = L_B * (1 + 0.04167x)$ Where: x = width of lane greater than 15 ft.

W_L = width of ramp lane

Superelevation Transitions for Ramp Curves

Figure 640-14b

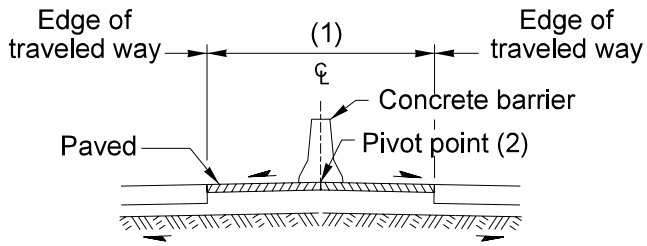

Design A
Crowned Median

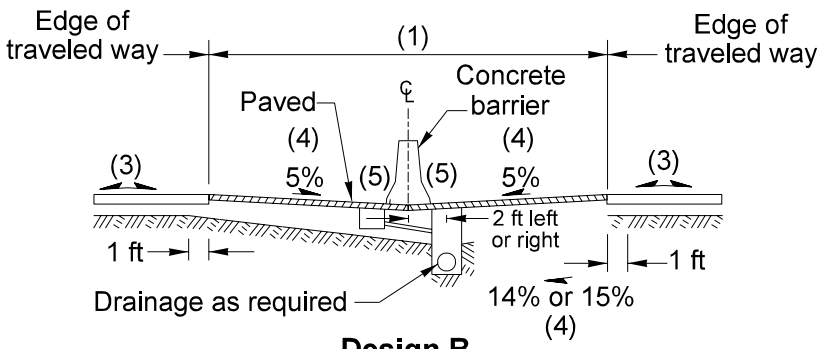

Design B
Depressed Median (2)

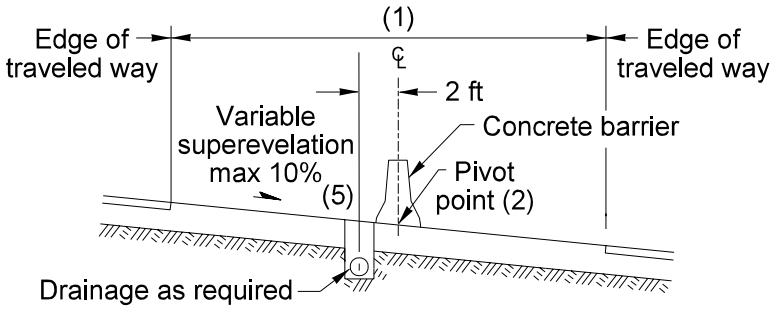

Alternate Design 1
Single Pivot Point

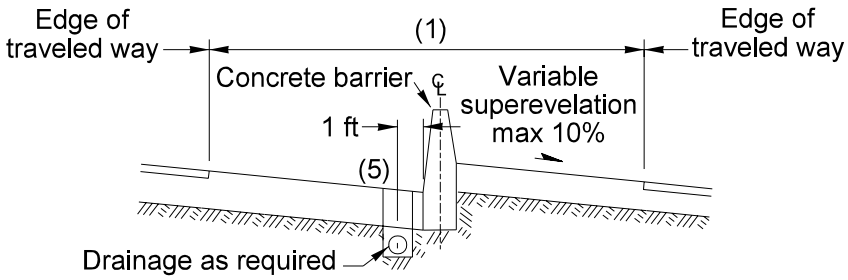

Alternate Design 2
Dual Pivot Points (2)

For notes, see Figure 640-15c

Divided Highway Median Sections
Figure 640-15a

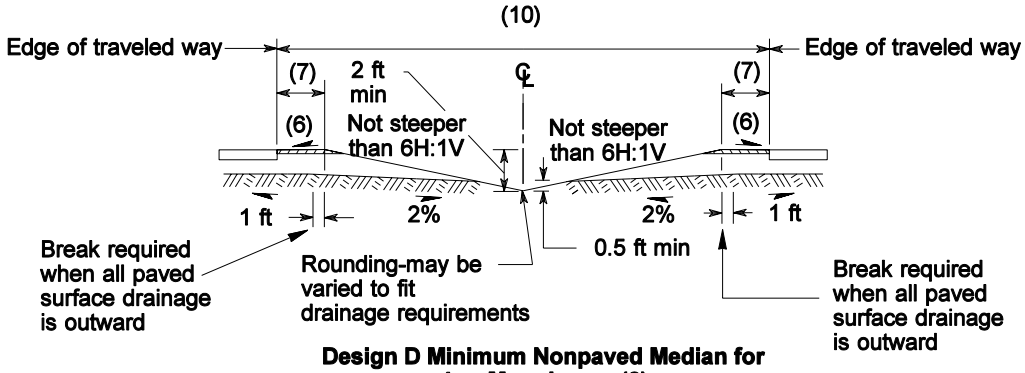

Design D Minimum Nonpaved Median for 4 or More Lanes (2)

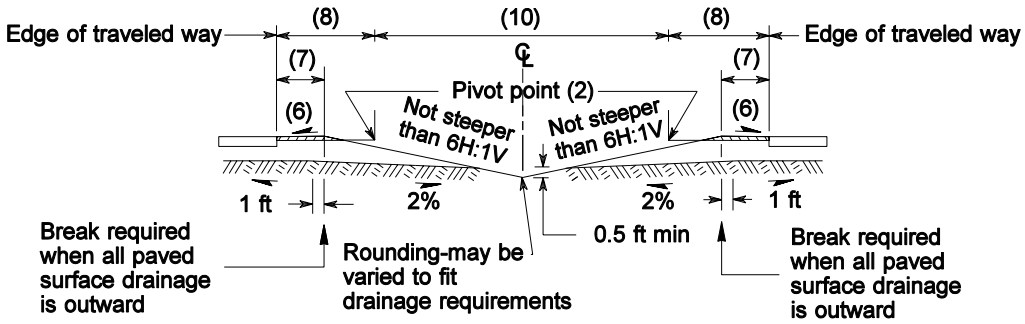

Design D Minimum for 4 or More Lanes with Future Lanes in Median

For notes, see Figure 640-15c

Divided Highway Median Sections

Figure 640-15b

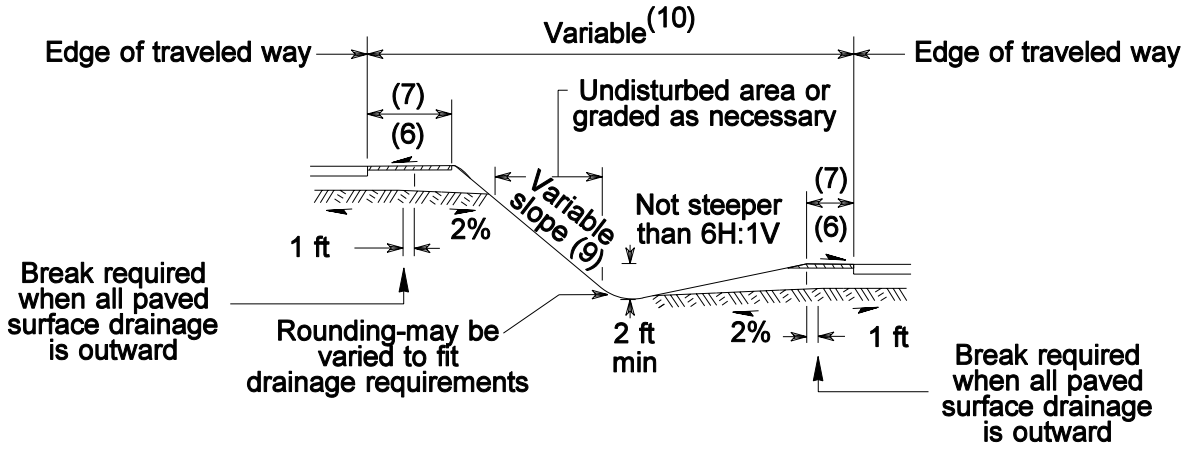

Design E Minimum for 4 or More Lanes with Independent Alignment

Notes:

(1) Designs A and B including Alternate Designs 1 and 2 are urban median designs, see Chapter 440 for minimum urban median width.

(2) Locate the pivot point to best suit the requirements of vertical clearances, drainage, and aesthetics.

(3) Pavement slopes generally shall be in a direction away from the median. A crowned roadway section may be used in conjunction with the depressed median where conditions warrant. See Figure 640-3 for additional crown information.

(4) Design B may be used uniformly on both tangents and horizontal curves. Use alternate designs 1 or 2 when the “roll over” between the shoulder and the inside lane on the high side of a superelevated curve exceeds 8%. Provide suitable transitions at each end of the curve for the various conditions encountered in applying the alternate to the basic median design.

(5) Method of drainage pickup to be determined by the designer.

(6) Median shoulders normally slope in the same direction and rate as the adjacent through lane. When median shoulders are over 6 ft wide or cement concrete pavement is used, median shoulders may slope toward the median. However, the “roll over” algebraic difference in rate of cross slope shall not exceed 8%. See figures 640-10a and 10b for additional shoulder details.

(7) See Chapter 440 for minimum shoulder width.

(8) Future lane, see Chapter 440 for minimum width.

(9) Widen and round foreslopes steeper than 4H:1V as shown on Figure 640-10b.

(10) Designs C, D, and E are rural median designs, see Chapter 440 for minimum rural median widths. Rural median designs may be used in urban areas when minimum rural median widths can be achieved.

Divided Highway Median Sections
Figure 640-15c

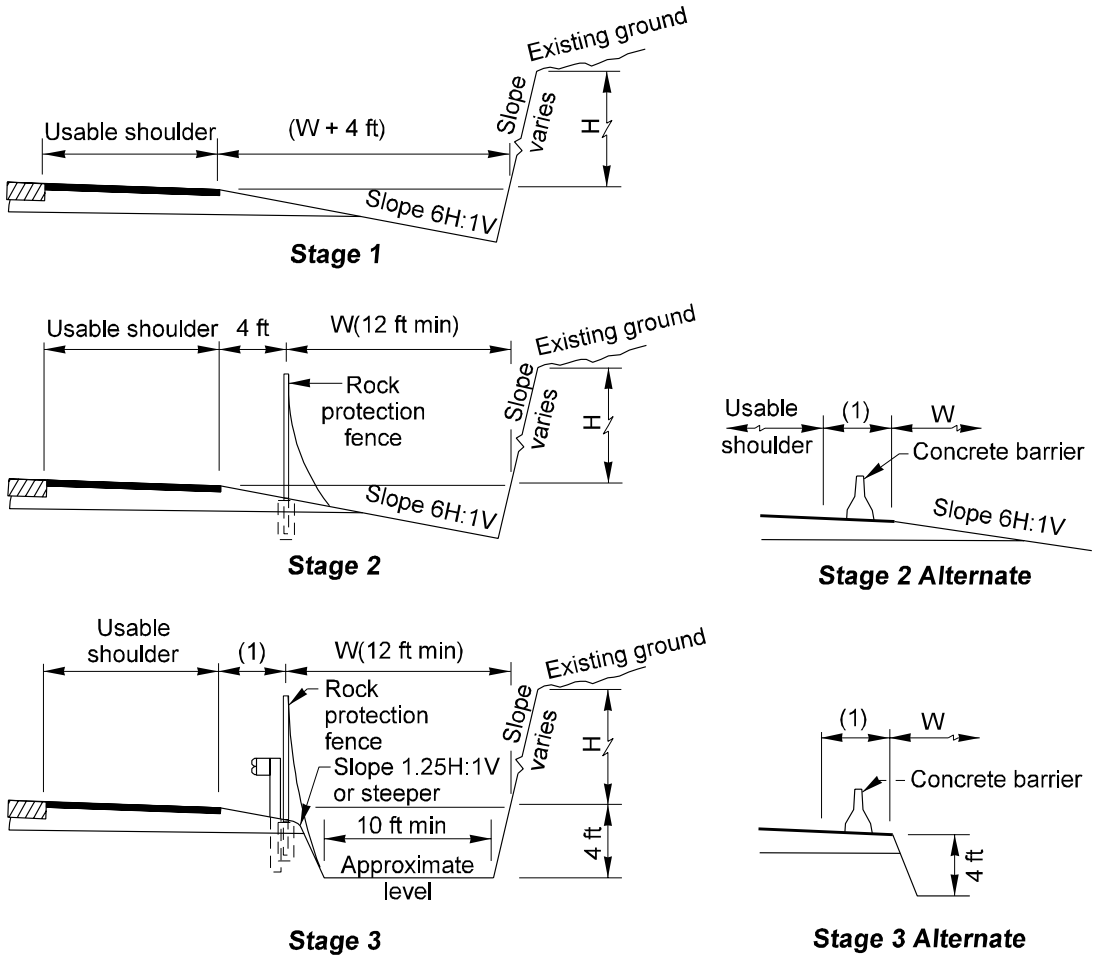

Rock Slope	H(ft)	W(ft)
Near Vertical	20-30 30-60 >60	12 15 20
0.25H:1V through 0.50H:1V	20-30 30-60 60-100 >100	12 15 20 25

Notes:

Cut heights less than 20 ft shall be treated as a normal roadway unless otherwise determined by the Region Materials Engineer.

Stage 2 and 3 Alternates may be used when site conditions dictate.

Fence may be used in conjunction with the Stage 3 Alternate. See Chapter 700 for clear zone requirements.

(1) See Chapter 710 for required widening for guardrail and concrete barrier.

Roadway Sections in Rock Cuts, Design A

Figure 640-16a

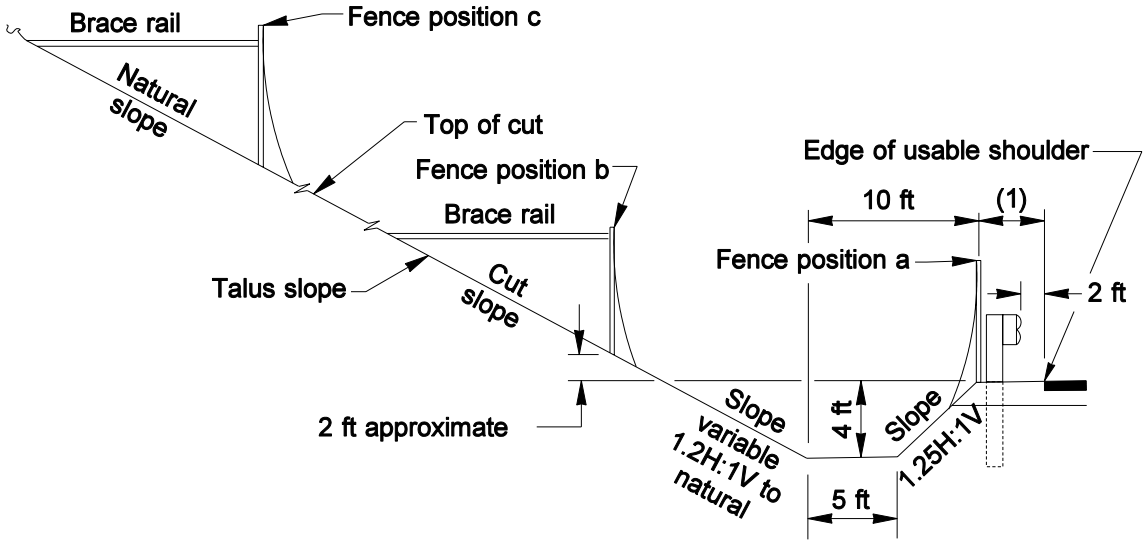

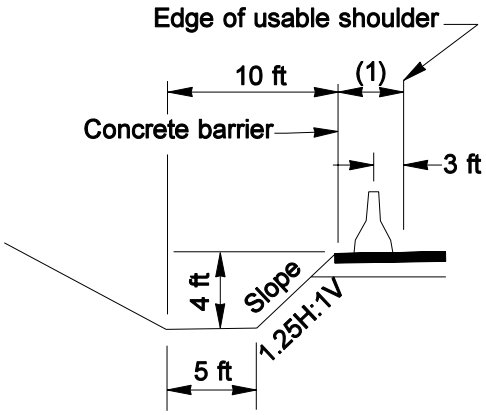

Shoulder Barrier Alternate

Notes

Ordinarily, place fence within a zone of 100ft to 200 ft maximum from base of cliff measured along slope.

Rock protection fence may be used in conjuction with the Shoulder Barrier Alternate when site conditions dictate.

(1): See Chapter 710 for required widening for guardrail and concrete barrier.

Roadway Sections in Rock Cuts, Design B
Figure 640-16b

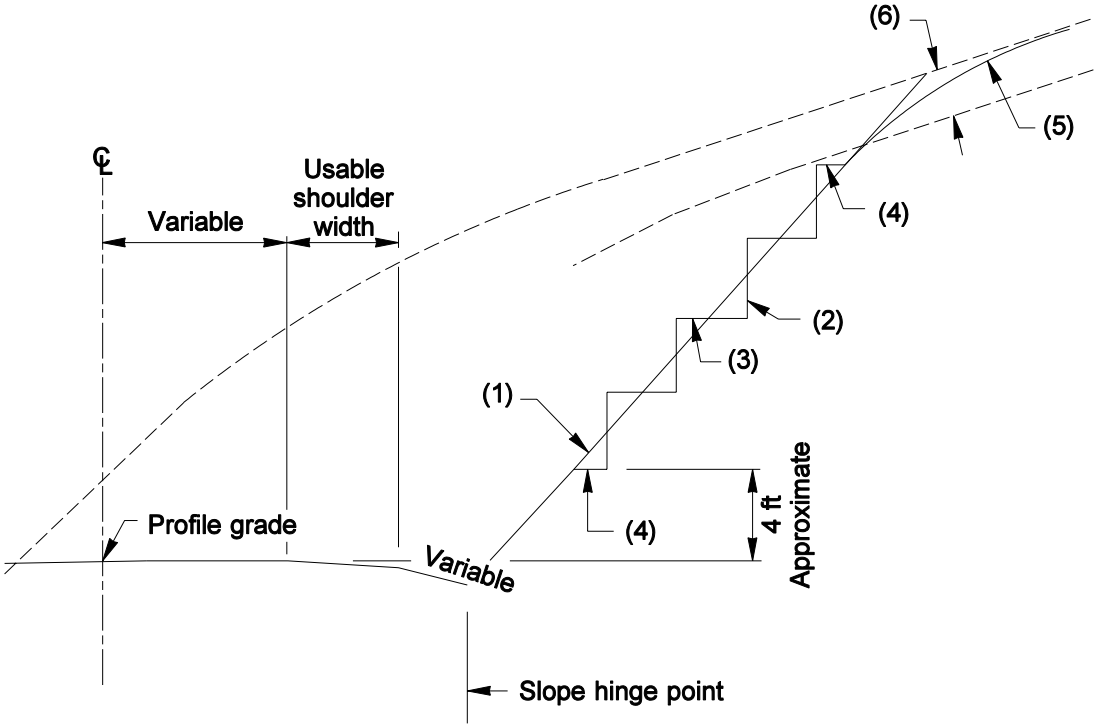

Notes:
(1) Staked slope line - Maximum slope 1H: 1V.
(2) Step rise - height variable 1 ft to 2 ft
(3) Step tread - width = staked slope ratio x step rise.
(4) Step termini - width = 1/2 step tread width.
(5) Slope rounding.
(6) Overburden area - variable slope ratio.

Roadway Sections With Stepped Slopes
Figure 640-17

Bridge End Condition	Toe of Slope End Slope Rate	Lower Roadway Treatment (1)	Slope Rate
End Piers on Fill	Height Rate ≤ 35 ft $1^3/_4$H:1V > 35 ft 2H:1V (2)	Posted speed of lower roadway. Treatment > 50 mph Rounding ≤ 50 mph No rounding	
End Piers in Cut	Match lower roadway slope.(3)	No rounding, toe at center line of the lower roadway ditch.	(4)
Lower Roadway in Cut	Match lower roadway slope.(3)	No rounding, toe at center line of the lower roadway ditch.	(4)
Ends in Partial Cut and Fill	When the cut depth is > 8 ft and length is > 100 ft, match cut slope of the lower roadway. When the cut depth is ≤ 5 ft or the length is ≤ 100 ft, it is designers choice.	When the cut depth is > 8 ft and length is > 100 ft, no rounding, toe at center line of the lower roadway ditch. When the cut depth is ≤ 5 ft or the length is ≤ 100 ft, it is designers choice.	(4) (4)

Notes:

(1) See Figure 640-18b

(2) Slope may be $1^3/_4$H:1V in special cases.

(3) In interchange areas, continuity may require variations.

(4) See 640.07.

Bridge End Slopes

Figure 640-18a

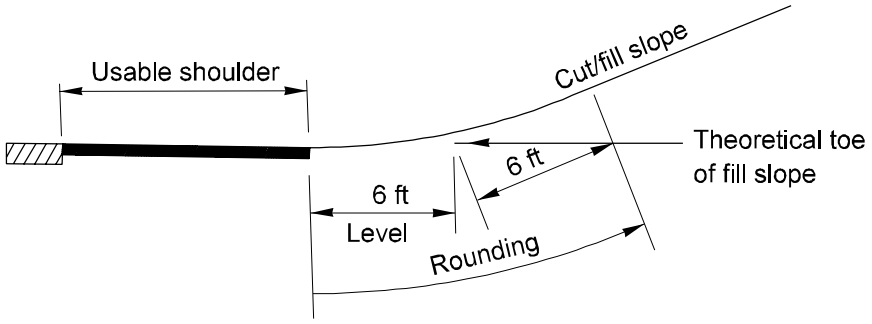

Rounding

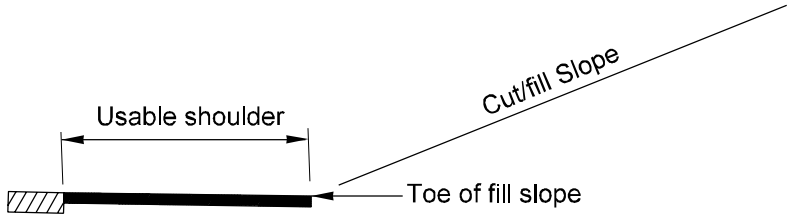

No Rounding

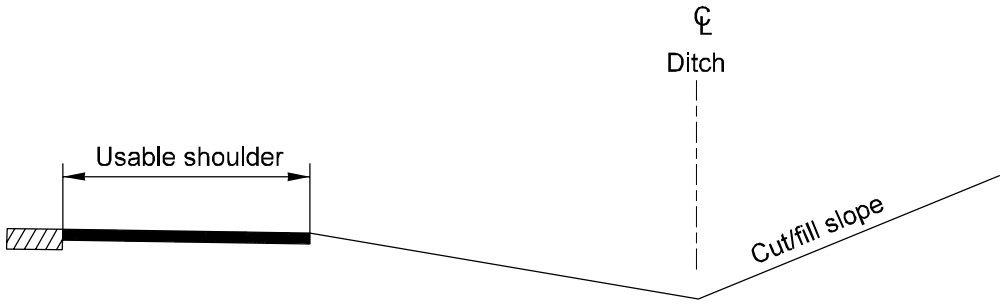

Toe at ℄ of Roadway Ditch

Bridge End Slopes
Figure 640-18b

810 Work Zone Traffic Control

810.01 General
810.02 References
810.03 Public Information
810.04 Work Zone Classification
810.05 Work Zone Types
810.06 Project Definition
810.07 Work Zone Safety
810.08 Regulatory Traffic Control Strategies
810.09 Traffic Control Plans and Devices
810.10 Documentation

810.01 General

Highway improvements always have some impact on the users of that facility during the construction phase. The various activities required to improve the highway cannot be undertaken without some disruption to the existing traffic patterns. In all but a very few instances the public must have some form of access through or around the work site. The planning, design, and preparation of contract documents for the modification of these traffic patterns during construction is known as work zone traffic control. The frequency of traffic collisions in work zones is disproportionately higher than at any other highway location and the primary consideration in providing work zone traffic control is safety. Safety is the primary consideration for all people within the work zone, the motorist, pedestrians, bicyclists, contractor's workers, agency's inspectors, surveyors, and other personnel on the site.

Maintaining the optimum carrying capacity of an existing facility during construction is usually not possible. As construction progresses, existing traffic lanes will be either temporarily narrowed or closed and will reduce the highway's capacity. Even when the construction work does not affect adjacent traffic lanes, slowdowns in the traffic flow are common because these activities can be a distraction to the motorist. Providing improvements to alternate routes of travel, widening temporary traffic lanes, staging work to occur in off-peak traffic hours, and other means of offsetting the capacity reduction are part of a comprehensive work zone traffic control strategy. The impacts these operations have on the traffic flow are important, but not at the expense of safety. The construction activities that disrupt or reduce traffic flow can often be scheduled for time periods when the traffic volume is minimal.

810.02 References

Manual on Uniform Traffic Control Devices for Streets and Highways (MUTCD), USDOT, Washington DC, 1988, including the *Washington State Modifications to the MUTCD*, M 24-01, WSDOT, 1996

Planning and Scheduling Work Zone Traffic Control, USDOT, 1981

Directive D 55-20, Reduced speed in maintenance and construction zones.

Instructional Letter IL 4008.00, WSP traffic control assistance in work zones.

Standard Plans for Road, Bridge, and Municipal Construction, M 21-01, WSDOT

Standard Specifications for Road, Bridge and Municipal Construction, M 41-10, WSDOT

Plans Preparation Manual, M 22-31, WSDOT

Traffic Manual, M 51-02, WSDOT

Construction Manual, M 41-01, WSDOT

Work Zone Traffic Control Guidelines, M 54-44, WSDOT

Highway Capacity Manual, 2000, TRB

810.03 Public Information

Accurate and timely reporting of project information to the public is a valuable element in the overall traffic control strategy. The use of public information resources, such as newspapers, radio, and television, can greatly improve the public's perception and acceptance of the necessary delays and other inconveniences caused by the project's construction. The potential benefits derived from this effort are:

- Advanced notice might encourage motorists to seek alternate routes around the project.
- Reduced traffic volume and driver awareness might result in fewer crashes, safer working conditions, and fewer motorist complaints.
- Motorist acceptance might reduce aggressive driving behavior.

The region's public information officer can provide assistance in this effort.

810.04 Work Zone Classification

The duration of work is a major factor in determining the number and types of devices used in traffic control work zones. There are five classes of zones categorized by the expected duration of work. Different criteria apply to the design and planning for each of these. Several work zone classifications might be present during the construction phase of a project. The following are the five classes of work zones.

(1) Long-Term Stationary Work Zones

Long-term stationary work zones occupy locations longer than 3 days. At these locations there is ample time to install and realize benefits from the full range of traffic control procedures and devices that are available for use. Generally, larger channelizing devices are used, as they have more retroreflective material and offer increased nighttime visibility. The larger devices are also less likely to be displaced or tipped over by passing traffic. This can be an important consideration during those periods when the work crew is not present. Since long-term operations extend into nighttime, retroreflective and illuminated devices are necessary. Temporary detours and barriers can be provided, and inappropriate pavement markings can be removed and replaced with temporary markings. The time required for the installation and removal of temporary barriers and pavement markings is justifiable when they are required for about a week.

(2) Intermediate-Term Stationary Work Zones

Intermediate-term stationary work zones occupy a location from overnight to 3 days. At these locations it might not be feasible or practical to use procedures or devices used for long-term stationary temporary traffic control zones. The increased time required to place and remove these devices might significantly lengthen the project, thus increasing the workers exposure time. The region's traffic office is a valuable resource to assist in making this decision.

(3) Short-Term Stationary Work Zones

Short-term stationary work zones are locations where the work will be accomplished during daylight hours and the activity can be accomplished in 12 hours or less. Most maintenance and utility operations use short-term stationary work zones. They are also used for minor construction activities on projects. The work crew is present to maintain and monitor the temporary traffic control devices. The use of flaggers to control traffic is sometimes necessary. Lighting and retroreflective devices are used when seasonal and climatic conditions limit visibility.

(4) Short-Duration Work Zones

Short-duration work zones occupy a location for up to one hour. During short-duration work, the work crew sets up and takes down the traffic control devices. Because the work time is short, the impact to motorists is usually not significant and simplified traffic control procedures are used. These simplified control procedures can often be standardized plans as contained in the *Standard Plans* and the *Work Zone Traffic Control Guidelines*.

(5) Mobile Work Zones

Mobile work zones are work activities that progress along the road either intermittently or continuously. Mobile operations often involve frequent stops for activities such as litter cleanup, pothole patching, or utility operations and are similar to short duration work zones. Warning signs, flashing vehicle lights, flags, and channelizing devices are used. When the operation moves along the road at low speeds without stopping, the advance warning devices are often attached to mobile units and move with the operation. Flaggers are exposed to more

extreme hazards in these operations and safeguards are necessary. Electronic signs and flashing arrow displays are far more effective than flaggers in these situations. Pavement milling and paving activities are to some extend mobile operations in that they can progress along a roadway several miles in a day. These operations, however, are not considered mobile work zones.

810.05 Work Zone Types

The work zone type is the basic layout of the work site and the configuration of traffic lanes. There are ten basic work zone types. See Figures 810-1a through 810-1c. Work sites that are located completely off the roadway and do not disrupt traffic are not included. A description of each of the eleven types is as follows:

(1) Lane Constriction

The lanes in this work zone type retain their normal number and general alignment. One or more of the traffic lanes have reduced widths to provide the necessary separation from the work zone. This arrangement causes the least disruption to traffic.

(2) Lane Closure

One or more of the traffic lanes are closed in this work zone type. A capacity analysis is necessary to determine the extent of congestion that might result.

(3) Shared Right of Way

This work zone type involves using one lane for both directions of traffic. Flaggers or traffic signals are normally used to control the alternation of traffic movements.

(4) Temporary Bypass

This work zone type involves total closure of one or both directions of travel on the roadway. Traffic is routed to a temporary bypass constructed within the highway's right of way.

(5) Intermittent Closure

This work zone type involves stopping all traffic in both directions for a relatively short time to allow the work to proceed. After a certain amount of time, driven by the traffic volume, the roadway is reopened.

(6) Crossover

This work zone type involves routing the traffic from one direction onto a portion of the median and roadway of the opposing traffic. It can also incorporate lane width constrictions to maintain the same number of lanes. On higher speed roadways, a portable or temporary barrier is used to separate the two directions of traffic.

(7) Shoulder Use

The traffic lanes are routed onto the shoulder in this work zone type. The structural capacity of the shoulder must first be analyzed to determine its ability to carry the proposed traffic.

(8) Median Use

This work zone type is similar to the shoulder use type and is used on divided highways where the median and adjacent shoulders are used for the traffic lanes. Barriers are usually necessary to separate opposing traffic.

(9) Detour

This work zone type involves total closure of the roadway. Traffic is rerouted to an adjacent street or highway.

(10) Multiple Lane Separation

In this work zone type the traffic lanes in one direction are separated to allow construction activities within one of the lanes. On higher speed roadways, temporary barriers are provided to prevent errant vehicles from entering the work area.

810.06 Project Definition

Large projects are more successful in managing traffic and providing adequate safety when there is early and ongoing communication between the designer and the construction Project Engineer, who will be responsible for the administration of the contract. Agreement is necessary to ensure that the traffic control plans and specifications will be effective and enforceable. In addition, a meeting (attended by the region's Traffic Engineer, law enforcement officials, a

construction project engineer, and representatives from local agencies affected by the planned project) is held early in the design definition phase to discuss construction work zone traffic control strategy options and to select the most feasible approach. Additional traffic control strategy meetings, depending on the size and complexity of the project, are held as more specific design information becomes available.

The options developed for the work zone traffic control strategy define the level of safety provided for motorists, pedestrians, and workers, and predict the acceptable level of service to be maintained for traffic. The objectives of this strategy include the following:

- The safety of motorists and pedestrians traveling through work zones.
- Protection of highway workers from hazards associated with moving traffic.
- Minimize travel delays associated with the work activities.
- Facilitate access to abutting properties and minimize disruption and loss of revenue to adjoining businesses.
- Address issues that might interfere with the contractor's ability to accomplish the work within the specified working days of the contract.

(1) Time Restrictions

The traffic volumes on a highway or street vary greatly both during the day and the week. Generally on weekdays maximum traffic flows (peak hour volumes) occur twice a day, in the morning and in the early evening. Additionally, these traffic flows tend to be unidirectional. In the morning the predominate traffic flow is to a major destination and in the evening the flow is reversed. Construction activities on the portion of the roadway not being used by the peak traffic flow will cause less disruption. After these peak traffic periods, volumes decrease significantly and construction activities during these periods will have less impact on the highway users. During the late evening, traffic volumes drop to extremely low levels. Construction activities during these time periods have minor impacts on the traffic flow, but require additional safety considerations because of reduced visibility and diminished motorist skills during the hours of darkness.

As noted above, construction in work zones can have a negative impact on peak hour traffic demands. It is sometimes necessary to curtail work at certain times during the day and open closed traffic lanes to reduce traffic delays. These periods are referred to as the hours of restriction in the contract and are the hours when all existing lanes are open to traffic. The maximum capacity a traffic lane in construction work zones tends to be lower than that used in normal capacity analysis. This is due in part to the number of visual distractions and to the narrow lanes within the work zone.

Traffic lanes in work zones reach saturation before the traffic volume approaches the theoretical maximum lane capacity of a free-flowing facility. See the *Highway Capacity Manual* and *Planning and Scheduling Work Zone Traffic Control* guidebook for applicable lane volumes and other factors. Several elements, including, lane restrictions, adjacent channelization devices, excessive signing, and distractions along on the roadside, contribute to lower lane capacity in work zones. When the traffic volume exceeds the capacity of the facility, operating speeds start dropping quickly. This slowing at the front of the traffic platoon is then amplified back through the following traffic and severe braking and stopping occurs. Once the traffic flow reaches this "forced flow" condition, traffic backups will occur and normal free flow conditions will not return until well after the usual peak hour condition. When specifying the time restrictions in the contract, consider beginning the restriction before the actual peak hour volume condition occurs.

Certain holidays, particularly those that extend beyond the normal weekend, and special events can generate abnormally high traffic volumes. Restrictions are needed on construction activities that might restrict or reduce the highway's capacity during these times.

When determining the hours of restriction, check the local agency noise ordinances and determine what construction work can be done at night.

Construction activities that cause excessive noise, such as pile driving, are usually prohibited at night in urban areas. Also, older types of changeable message signs and arrow panels use noisy engine-powered generators. Limitations on noise levels are also included in the contract documents.

Time restrictions can also affect the time required to complete the project. The total working days specified in the contract must address the possible reduction in productivity caused by the time restrictions imposed on the contractor. When considering time restrictions, estimate the time required to set up and take down the traffic control devices and the time needed by the contractor to bring the construction equipment and materials into the work area. If this total time coupled with the proposed time restrictions does not provide a normal eight to ten hour work shift, productivity will drop and contract costs will escalate.

Excessive disincentives (referred to as liquidated damages in the Standard Specifications) can be included in the contract to encourage the contractor to complete the work within a specified time. When contracts specify unusually short time periods to complete the work or impose numerous time restrictions when work cannot be accomplished, contractors must increase their work force significantly, use abbreviated work shifts, and pay premium wages for work preformed during nontypical work periods. This usually results in disproportionately higher contract bids and during construction can lead to claims against the contract and even litigation to resolve disputes. It might also produce a strained or hostile relationship between the contractor and Project Engineer.

Incentives, in the form of additional monetary compensation, coupled with provisions that allow the contractor latitude in proposing innovative ways of accomplishing the work, are sometimes more effective. Total contract costs can often be less when incentives rather than disincentives are used. Incentives are usually only used when a high level of productivity is required from the contractor to complete the contract or a portion of the contract as soon as possible to reduce road use costs and delays. Incentives are also used when a critical element of the work has significant public concern or political interest. The failure to complete these critical work elements on time can also have an undesirable negative effect and disincentives are included with incentives to emphasis the importance of the work.

Total road user costs are generated during the traffic analysis in the design stage of a project and can be the basis for determining disincentives or incentives in a contract.

(2) Road Closures

Closing a highway, street, or ramp, while not always practical, is a desirable option from a safety viewpoint. For the traveling public, closing the road for a short time might be less of an inconvenience than driving through a work zone for an extended period of time. The time necessary for construction is also reduced and work zone safety is significantly improved. Road closures usually minimize the on-site work zone traffic control, which in turn reduces the construction costs. Road closures can add to the cost of the project because off-site traffic control is needed to provide signing and improvements to detour routes, advanced motorist information signing, and media announcements.

Consider a roadway closure if an alternate route is available. The alternate route must have a sufficient lane capacity to carry the additional traffic volumes and the structural capacity of the pavement must be capable of withstanding the impact of heavier vehicles. Also, determine if there are any vertical clearance restrictions that will prevent trucks from using the route. See Chapter 1120 for vertical clearance requirements. A written agreement with the local agency is usually necessary to route additional traffic on to their roadways. A road closure might isolate private residences or deny access to businesses fronting the highway. State law prohibits “land-locking” property owners. If an alternate and reasonably direct access route is not available for these people, the road closure cannot be considered.

If a road closure is feasible, take the following actions:

- Obtain local agency approval to use a local roadway as a detour.
- Meet with the community and businesses to discuss the roadway closure and find ways to mitigate the community's concerns.
- Determine the maximum number of days allowed for the closure and incorporate this into the contract documents.
- Determine if liquidated damages or incentives for early completion will be necessary to ensure completion of the work within the time required.
- Determine if additional traffic control measures are needed at intersections on the detour route.
- Consider jobsite access for the contractor's workers and equipment.
- Contact emergency services, schools, transit, and civic organizations.
- Develop a method for conveying notification of the planned road closure to the public. Extensive multimedia approaches are necessary for the closures of major highways.

(3) Predicting Delay and Cost

In the work areas of long-term major projects, traffic delays, the possibility of crashes, and other factors contribute to the overall costs of a project. These costs, called user costs, are indirect, being societal, but are considered when proposing work zone traffic control options. These costs involve the following:

- Crashes and the resulting property damage, injuries, and possible fatalities.
- Vehicle delays and loss incurred by the motorist.
- Vehicle operation and fuel consumption.
- Business revenue losses.

Methods of predicting delay and costs are contained in the guidebook, *Planning and Scheduling Work Zone Traffic Control*. The Headquarter's Transportation Data Office can assist in providing factors for various societal costs. Options that provide the least cost to the public are then weighed against the project costs for providing traffic control. Restrictions on high volume highways for extended periods of time can result in extraordinarily higher user costs and might favor a road closure to reduce project costs.

810.07 Work Zone Safety

Effective work zone traffic control strategy encompasses the safety of all users and is not limited to providing clear guidance and warning to the motorist. Work areas present constantly changing roadway conditions that might be unexpected by the motorist and the likelihood of confusing some drivers is increased. The possibility of errant vehicle crashes creates a high degree of vulnerability for workers, flaggers, pedestrians, and bicyclists in the work zone.

(1) Workers

Working on or along the highway on construction projects is one of the more hazardous work environments in the state. The risk of being struck by a vehicle traveling through the work zone increases as traffic volumes and speeds increase. Long delays can cause some motorists to become impatient and act unpredictably. Consider the risk to workers when developing the traffic control plans for long-term stationary work zones.

Traffic barriers provide the most effective protection for workers and eliminate the need for flaggers and many traffic control devices. The costs of furnishing and removing temporary traffic barriers on longer duration projects can often be less than the cost associated with the frequent repositioning of other traffic control devices. Intrusion warning devices, used to alert workers to an errant vehicle that has intruded into the work zone, are ineffective on high-speed roadways because the worker has little time to react to the warning. Also, construction and traffic noise can mask the sound emitted from these devices.

(2) Flaggers

In a general sense, flaggers are also workers. Their function in the work zone, however, is uniquely different than other workers and they are treated as a separate group. Flaggers must perform their duties in extremely high-risk situations. Flaggers are not included in traffic control strategies until all other reasonable means of traffic control have been considered. More innovative traffic control methods such as temporary traffic signals, detour routes, and alternative traffic control plans can eliminate the need for flaggers.

Flaggers are normally used to stop traffic for short duration work activities such as intermittent lane closures. They can also be used to watch traffic and alert workers of the approach of an errant vehicle. Using flaggers solely to instruct motorists to proceed slowly is ineffective and is an unacceptable practice. When flaggers are used, provide a method of alerting flaggers to the hazard of a vehicle approaching from behind. When flagging is needed for nighttime construction activities, provide adequate illumination of the flagger's station. Shortwave radios or cellular phones might be necessary to allow flaggers to communicate with one another when they are required to control traffic movements in shared right of way work zones.

(3) Road Users

Road users, rightfully, assume they have full use of the roadway unless directed otherwise. The message conveyed to the user through signing, markings, and devices must be consistent and credible.

(a) **Motorist.** Effective planning and design of work area traffic control zones begins with the motorist. If motorists can easily understand the traffic control and have adequate time to react or make rational decisions, they will operate their vehicles in a safer manner. It is essential that designs be based upon the characteristics and limitations of drivers who use the highway and street networks. As speeds increase on a facility, the motorist requires more time to respond to conditions. Perceived insufficient or conflicting information and too much information conveyed by signing will confuse the motorist and contribute to erratic driving behavior. Credibility might be damaged if signing and other devices warn the motorist of a condition that no longer exists.

(b) **Pedestrians.** Public highways and streets cannot deny access to pedestrians if no other route is available to them. Even in work zones, adequate facilities are provided to allow pedestrians to travel through or around the work zone. In urban areas and other locations where pedestrian travel is pronounced, the construction of temporary pathways that route the pedestrian around the work zone may be necessary. Covered walkways are provided in the work zone when there is a potential for falling objects to strike pedestrians. All pedestrian facilities within the work zone must comply with ADA requirements for barrier-free access. See Chapter 1025 for pedestrian design requirements.

(c) **Bicyclists**. Bicyclists are allowed on most highways and streets and many use the bike as their principal means of transportation. In work areas where the speeds are in the range of 25 to 30 mph, the bicyclist can use the same route as motorized vehicles. On higher speed facilities the bicyclist will not be able to match the speed of these motorized vehicles and a different route or detour is sometimes necessary for safety and to reduce vehicular delays. When this is not possible, the bicyclists can be instructed to dismount and walk their bikes through the work zone on the route provided for pedestrians.

Riding surfaces are important for safe bicycle operation. Loose gravel, uneven surfaces, milled pavement, and various asphaltic tack coats endanger the bicyclist. Consider the condition of the surface the bicyclist will be required to use. See Chapter 1020 for more bicycle design requirements.

(d) **Motorcycles.** The riding surface is also important for motorcycle rider safety. The same surfaces that are a problem for bicyclists are also difficult for motorcyclists. Stability at high speed is a far greater concern for motorcycles than cars on grooved pavement, milled asphalt and tapers from existing pavement down to milled surfaces. Contractors must provide adequate warning signing for these conditions to alert the motorcycle rider.

(e) **Oversized vehicles.** Oversized vehicles exceed the legal width, height, or weight limits for vehicles, but are allowed on certain state highways. The regions' maintenance offices issue permits that allow these oversized vehicles to use these routes. If the proposed work zone will not accommodate these vehicles, provide adequate warning signs and notify the region's maintenance offices that issue these permits. In this notification, identify the type of restriction (height, weight, or width) and specify the maximum size that can be accommodated. On some projects, it may be necessary to designate a detour route for these oversized vehicles.

810.08 Regulatory Traffic Control Strategies

On highways with high posted speeds and aggressive drivers, traffic control measures can be difficult to enforce without the presence of police. Aggressive driver behavior is common in large metropolitan areas where commuters are a major component of the traffic. In these areas, consider strategies that rely on regulatory signing with law enforcement. The messages conveyed on regulatory signs, as shown in the MUTCD, can be enforced and citations can be issued by law enforcement agencies for infractions. Many signs within a work zone, however, are warning signs and compliance is a desired action and not a requirement. Even the advisory speed plaques installed under warning signs cannot be enforced.

(1) Enhanced Enforcement

Enhanced enforcement is the term used for stationing law enforcement personnel in the work zone. Their presence at the job site is to ensure compliance with motor vehicle laws and to moderate aggressive driver behavior. In general, work zones operate effectively if the correct strategy is implemented and law enforcement personnel are not necessary. Enhanced enforcement is only used when all other forms of traffic control can be shown to be ineffective in performance or excessive in cost.

When considering the use of enhanced enforcement, the initial determination is based on the designer's engineering judgment and the consensus of the region's maintenance, construction, traffic offices, and law enforcement input. Consider the following factors before proposing enhanced enforcement:

- The type of construction activity
- The complexity of the traffic control plans
- The possible need for a speed reduction
- Traffic volumes
- Excessively high speeds
- Abnormally high crash rates
- High frequency of DWI citations
- Nighttime work activities
- Geometric conditions
- Past history of traffic problems in similar areas

(2) Speed Reduction

The speed limits on state highways are set by the State Traffic Engineer and cannot be changed without approval. The speed limit for a facility is usually determined by conducting a speed survey and using the highest speed that 85 percent of the traffic drives.

Motorists tend to drive at a speed that seems appropriate for the conditions. Imposing an artificially low speed limit is rarely effective and even a speed reduction of 10 mph will have a very low compliance rate.

However, speed reductions can decrease crashes and work zone intrusions on high-speed multilane facilities when enhanced enforcement is present and the speed limit can be lowered temporarily during construction. Proposals to reduce the speed limit in these conditions are forwarded to the region's traffic office for consideration. Speed reduction guidelines are outlined in RCW 47.38.020, the *Construction Manual*, and Directive D 55-20, "Reduced Speed in Maintenance and Construction Zones."

The implementation of reduced speed zones is only considered when all other forms of traffic control are not effective in warning the motorist of conditions that require a slower operating speed. Examples of these conditions are:

- Reduced stopping sight distance
- Proximity to traffic barriers
- Severe roadway geometrics
- Extremely narrow lanes

810.09 Traffic Control Plans and Devices

The traffic control plans shown in the MUTCD and the Standard Plans provide the guidelines for individual situations. Most real-world locations have a combination of several situations and other geometric factors that require further augmentation of the traffic control. Traffic control devices are signs, traffic control signals, pavement markings, and other devices placed on or adjacent to a street or highway to regulate, warn, or guide traffic.

(1) Traffic Control Plans

Work zone traffic control plans are prepared for specific construction activities, such as lane reductions, closures, temporary bypasses, and the like, so the contractor has as much freedom as possible in scheduling the work. A specified construction sequence is not desirable because it might favor one contractor's methods of construction and might create an unacceptable bidding climate. All traffic control plans are site-specific in that the alignment of the roadway, lane configuration, intersection locations, and all other physical details peculiar to the project are shown. Contract specifications are used to identify when construction activities must be curtailed to maintain traffic flow.

The preparation of these plans and specifications requires the designer to not only have a thorough knowledge of highway construction activities but also an understanding of the unique traffic flow patterns within the specific project. The designer must be cognizant of the dynamic nature of construction activities and provide a constructible traffic control plan that will also safely and efficiently manage traffic. In addition, the users of the facility have little or no understanding of the construction occurring in the work zone and require far greater guidance than the contractor's or agency's people, who are familiar with the project. Traffic control plans are always designed from the perspective of motorists, pedestrians, and bicyclists' to provide the necessary information so they can proceed in a safe and orderly manner through a work zone. Unexpected roadway conditions, changes in alignment, and temporary roadside obstacles relating to the work activity need to be defined adequately to minimize the user's uncertainty.

(2) Physical Barriers

Physical barriers are used to both separate opposing traffic movements and separate the road users from the work zone. They are appropriate when errant vehicle intrusions into the work area are not acceptable. Unacceptable intrusions are those that can jeopardize the safety of the motorist or the workers. Three types of barrier protection are used in construction work zones. These are water-filled barriers, moveable barriers, and temporary concrete barriers.

Physical barriers are normally installed at the following locations:

- The separation of opposing traffic where two-way traffic must be maintained on one roadway of a normally divided highway for an extended period of time.
- The separation of opposing traffic where a four-lane divided highway transitions to a two-lane, two-way roadway that is being upgraded to become a divided four-lane roadway.
- Where drums, cones, barricades, or vertical panels do not provide adequate guidance for the motorist or protection for the worker.
- A multiple lane separation in a long term stationary work zone.
- Where workers are exposed to unusually hazardous traffic conditions.
- Where existing traffic barriers and bridge railings are removed during a construction phase.

(a) **Water-filled barriers** are longitudinal barrier systems that use lightweight modules pinned together and filled with water. They may be used as an improvement over traffic cones and

drums to channelize traffic through a work zone. They are most frequently used in short-term work zones because of the relative ease and rapidity of installation and removal. Two different water filled barrier systems (Triton and Guardian) have been crash tested with the test vehicle striking the system at a 25 degree angle at 45 mph and 60 mph. The barriers deflected up to 13 ft at 45 mph and 23 ft at 60 mph. At lesser speeds and angles this deflection will be less. However, with this amount of deflection, water-filled barrier will generally not be practical when large deflections or penetration of the barrier system is undesirable. Therefore, they cannot be considered as a substitute for concrete barrier.

The minimum length of water-filled barrier is 100 ft. At a 45 mph impact, the leading 30 ft of the barrier does not contribute to the length of need. For 60 mph, the beginning 60 ft does not contribute to the length of need. One of the water-filled systems, the Triton Barrier, can act as its own end treatment if the end module is left empty and the retaining pin is left out of the exposed end. The other system, the Guardian, requires a crashworthy end treatment or a TMA on the approach end.

(b) **Moveable barriers** are specially designed segmental barriers that can be moved laterally as a unit to close or open a traffic lane. Initial costs are high and it will only be considered in a long-term stationary work zone if frequent or daily relocation of a barrier is required. The ends of the barrier are not crashworthy and must be located out of the clear zone or fitted with an impact attenuator. Adequate storage sites at both ends of the barrier are required for the unique barrier-moving machine.

(c) **Temporary concrete barriers** are the safety-shape barriers shown in the Standard Plans. They are used in long-term stationary work zones on high-speed, multilane facilities. They are also used as a temporary bridge rail when existing bridges are being modified. These concrete barriers are often displaced in impacts with errant vehicles. Lateral displacement is usually in the range of two to four feet. When any barrier displacement is unacceptable, these barriers are anchored to the roadway or bridge deck. Anchoring systems are also shown in the Standard Plans.

The approach ends of temporary concrete barriers are fitted with impact attenuators to reduce the potential for occupant injury during a vehicle collision with the barrier. Examples of impact attenuators are shown in Chapter 720.

(3) Truck Mounted Attenuators

A truck mounted attenuator (TMA) is a portable impact attenuator attached to the rear of a large truck. Ballast is added to the truck to minimize the roll-ahead distance when impacted by a vehicle. The TMA is used as a shield to prevent errant vehicles from entering the work zone. They are most frequently used in short-term or mobile work zones.

(4) Fixed Signing

Fixed signing are the signs mounted on conventional sign supports along or over the roadway. This signing is used for long-term stationary work zones. Ground-mounted sign supports are usually wood and details for their design are in Chapter 820. Sign messages, color, configuration, and usage are shown in Part VI of the MUTCD. Sign mounting height and lateral placement requirements are somewhat different than those for permanent signing. These requirements are shown in Figure 810-2a and 2b. When preparing the work zone signing plan, review all existing signing in advance of and within the work zone for consistency. Cover or remove existing signs that can be misinterpreted or be inappropriate during construction.

(5) Portable and Temporary Signing

Portable and temporary signing is generally used in short term or mobile work zones where frequent repositioning of the signs is necessary to keep pace with the work along the highway. These signs are mounted on collapsible sign supports or vehicles. Portable changeable message signs (PCMS) and arrow board displays have electronic displays that can be modified. These signs are usually mounted on trailers and use batteries or a generator to energize the electronic displays.

Place the PCMS far enough in advance of the roadway condition to allow the approaching driver adequate time to see and read the sign's message twice. The following are some typical situations where PCMS are used:

- Where speed of traffic is expected to drop substantially.
- Where significant queuing and delays are expected.
- Where adverse environmental conditions, such as ice and snow, are present.
- Where there are extreme changes in alignment or surface conditions.
- Where advance notice of ramp, lane, or roadway closures is necessary.
- When accident or incident management teams are used.

The arrow board displays either an arrow or a chevron pointing in the direction of the intended route of travel. Arrow board displays are used for lane closures in multilane roadways. When closing more than one lane, use an arrow board display for each lane reduction. Place the arrow board at the beginning of the transition taper and out of the traveled way. The caution display (four corner lights) is only used for shoulder work. Arrow boards are not used on two-lane two-way roadways.

(6) Channelization Devices

Channelization devices are used to alert and guide the motorist through the work zone. They are a supplement to signing, pavement markings, and other work zone devices. Cones, tubular markers, and drums are shown in Figure 810-3. Barricade types are shown in Figure 810-4.

(a) **Cones.** Cones are either orange, fluorescent red-orange, or fluorescent yellow-orange in color and are constructed of a material that will not cause injury to the occupants of a vehicles when impacted. Eighteen-inch high cones can be used in the daytime on lower speed roadways. For nighttime operations and high speed roadways, reflectorized 28" high cones are necessary. Traffic cones are used to channelize traffic, divide opposing traffic lanes, and delineate short-term duration work zones.

(b) **Tubular Markers.** Tubular markers are fluorescent orange in color and are constructed of a material that will not cause injury on impact. They are available in heights from 18 inches to 4 feet. The taller marker is used on freeways and other high-speed highways or anyplace where more conspicuous guidance is needed. However, these taller markers, when placed near the edge of a traveled lane, can reduce the capacity of a traffic lane. The motorist will perceive the marker as a hazard and will either decelerate or attempt to move away from the marker to avoid contact. When the carrying capacity is critical, provide as much lateral clearance as possible to eliminate this problem. The shorter marker is less imposing in appearance and provides acceptable delineation.

(c) **Drums.** Drums are fluorescent orange in color, constructed of lightweight, flexible materials and are a minimum of 3 feet in height and 18 inches in diameter. Drums are the more commonly used devices to channelize or delineate traffic routes. They are highly visible and appear to be formidable obstacles. Drums are used at locations where high vehicular speeds are present because they have weighted bases and are less likely to be displaced by the wind generated by moving traffic.

(d) **Barricades.** The barricades used in work zone applications are portable devices. They are used to control traffic by closing, restricting, or delineating all or a portion of the roadway. There are four barricade types.

- The Type I Barricade is used on lower speed roads and streets to mark a specific hazard or channelize traffic.
- The Type II Barricade is used on higher speed roadways and has more reflective area for nighttime use.
- The Type III Barricades are used for lane and road closures.
- The Direction Indicator Barricade is used to define the route of travel on low speed streets or in urban areas where tight turns are required. In lane reductions, the

directional arrow on this barrier can be used in the transition taper to indicate the direction of the merge.

(7) Illumination

Illumination might be justified if construction activities take place on the roadway at night for an extended period of time. Illumination might also be justified for long term construction projects at the following locations:

- Road closures with detours
- Road closures with diversions
- Median crossovers on freeways
- Complex or unexpected alignment or channelization
- Haul road crossings (if operational at night)
- Temporary traffic signals
- Temporary ramp connections
- Disruption of an existing illumination system

See Chapter 840 for light level and other electrical design requirements. When flaggers are necessary for nighttime construction activities, always illuminate the flagger stations.

(8) Delineation

Pavement markings provide motorists with clear guidance of the path through the work zone and are necessary in all long-term work zones. Temporary pavement markings can be either painted, thermoplastic tape, or raised pavement markers. Remove existing confusing or contradictory pavement markings.

Other delineation devices are guideposts, concrete barrier delineators, and lateral clearance markers. These devices have retroreflective properties and are used as a supplement in delineating the traveled way during the nighttime. See Chapter 830 for guidepost delineation requirements. Lateral clearance markers are used at the angle points of barriers where they encroach on or otherwise restrict the adjacent shoulder. Concrete barrier delineation is necessary when the barrier is less than four feet from the edge of the traveled way. This delineation can be either barrier reflectors attached to the face of the barrier or saddle drum delineators that sit on the barrier. Figure 810-5 shows examples of both types of barrier delineators.

(9) Screening

Screening is used to block the motorist's view of construction activities adjacent to the roadway. Construction activities can be a distraction and motorist's reaction might cause unsafe vehicle operation and undesirable speed reductions. Consider screening the work area when the traffic volume approaches the roadway's capacity. Screening can be either vertically supported plywood panels or chain link fencing with vertical slats. These types of screening are positioned behind traffic barriers to prevent impacts by errant vehicles. The screening is anchored or braced to resist overturning when buffeted by wind.

Another type of screening, glare screening, is also used on concrete barriers separating two-way traffic to reduce headlight glare from oncoming traffic. Vertical blade type screens are commonly used in this installation. This screening also reduces the potential for motorist confusion at nighttime by shielding the headlights of other vehicles on adjacent roadways or construction equipment. Make sure the motorist' sight distance to critical roadway features is not impaired by these glare screens.

(10) Portable Traffic Signals

Portable traffic signals are conventional traffic signals used in work zones to control traffic. They are typically used on two-way, two-lane highways where one lane is closed and alternating traffic movements are necessary. They can also be used as a substitute for flaggers to stop traffic. See Chapter 850.

810.10 Documentation

Preserve the following documents in the project file: See Chapter 330.

- ☐ All correspondence dealing with a detour on to another agency's roadway
- ☐ Notification of oversize vehicle limitations
- ☐ Collision data

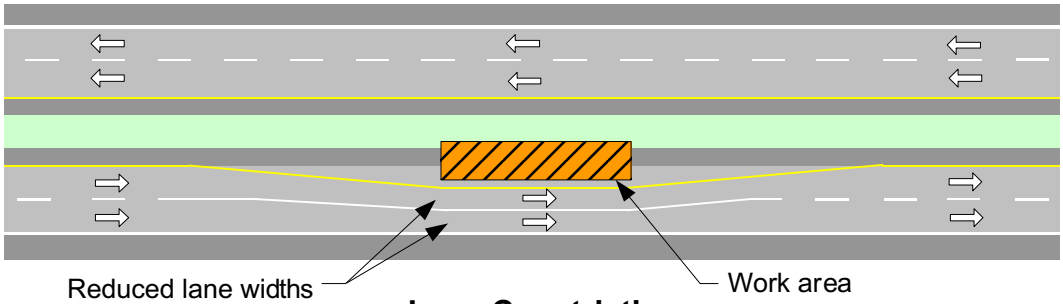

Lane Constriction

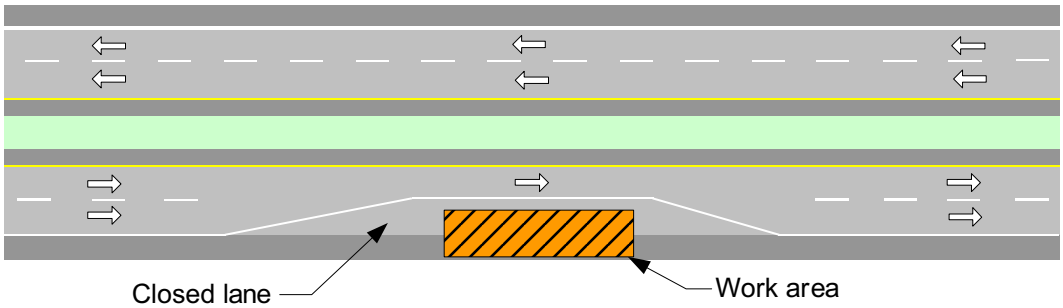

Lane Closure

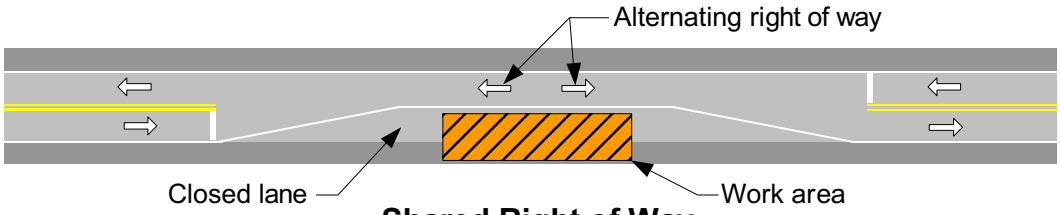

Shared Right of Way

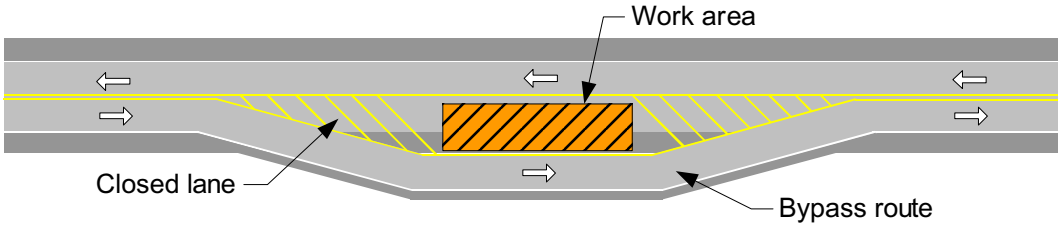

Temporary Bypass

Work Zone Types
Figure 810-1a

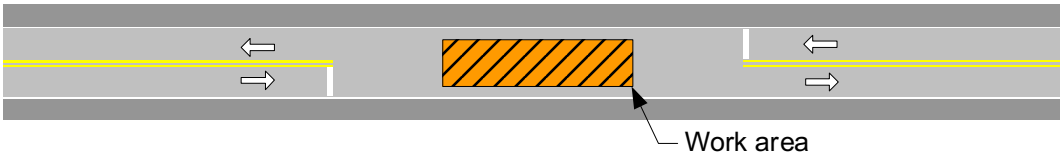

Intermittent Closure

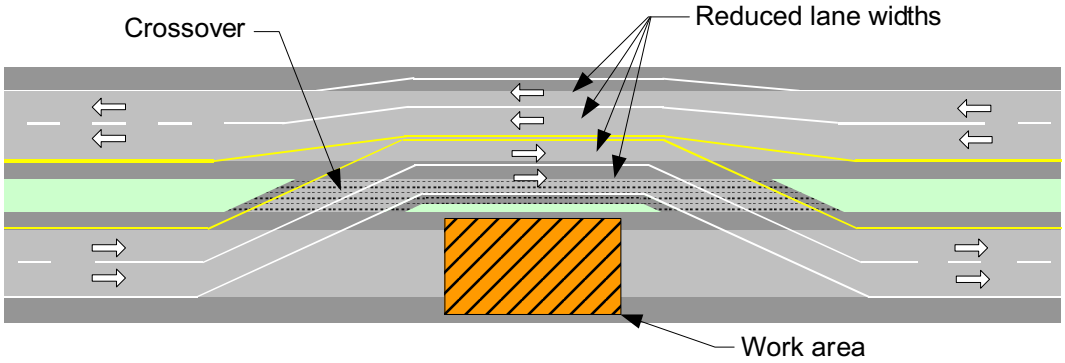

Crossover (with lane constrictions)

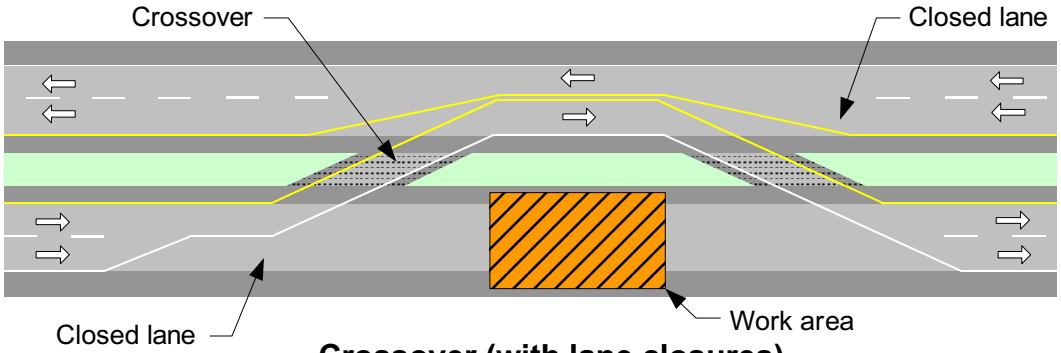

Crossover (with lane closures)

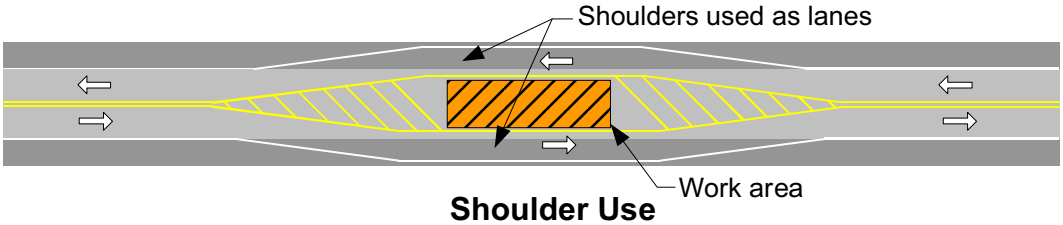

Shoulder Use

Work Zone Types
Figure 810-1b

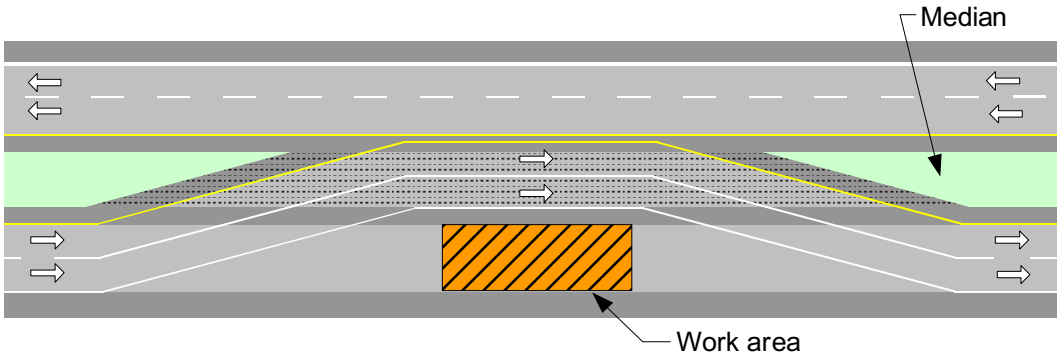

Median Use

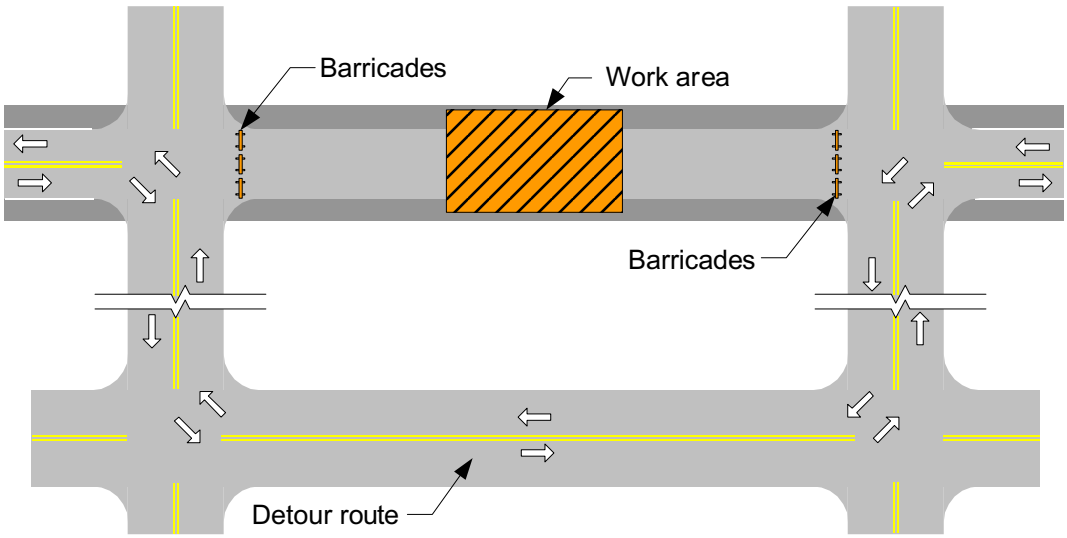

Detour

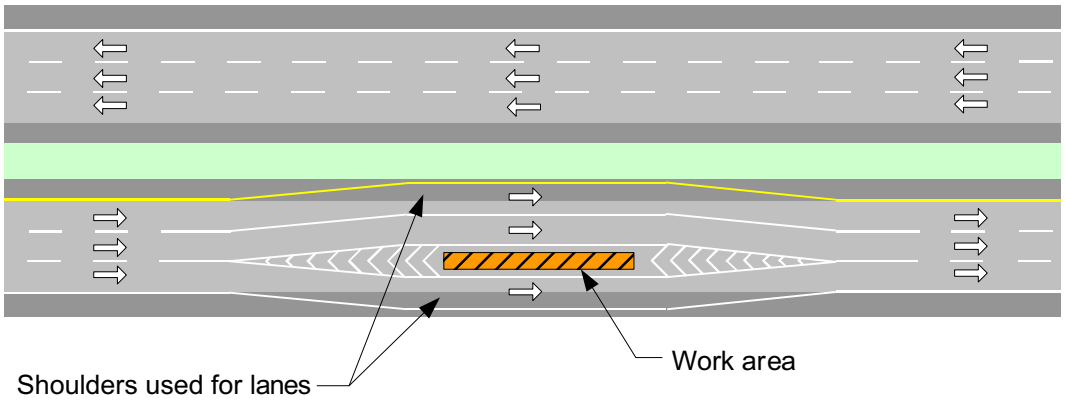

Multiple Lane Separation

Work Zone Types

Figure 810-1c

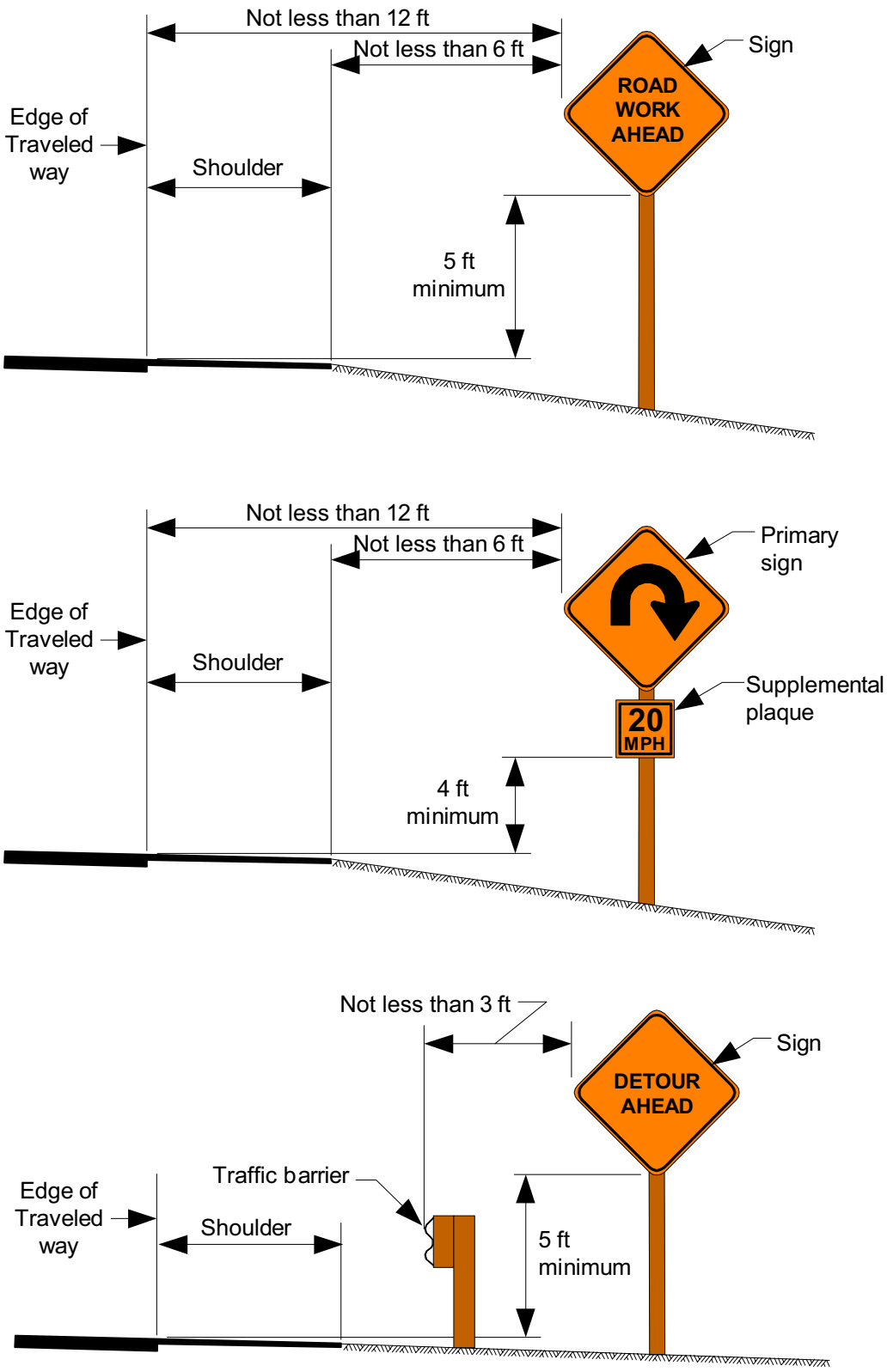

Sign Placement — Rural Areas
Figure 810-2a

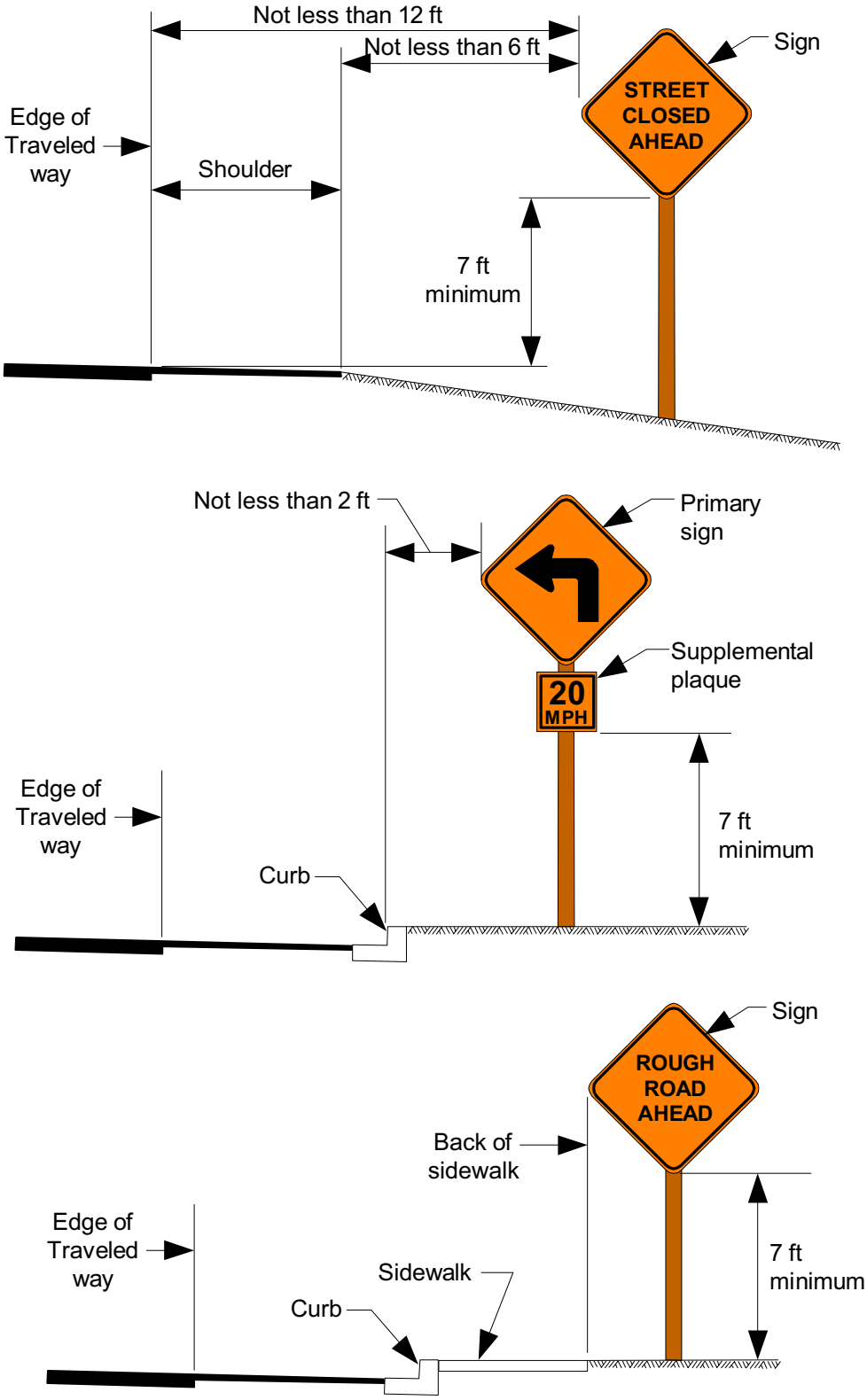

Sign Placement — Urban Areas
Figure 810-2b

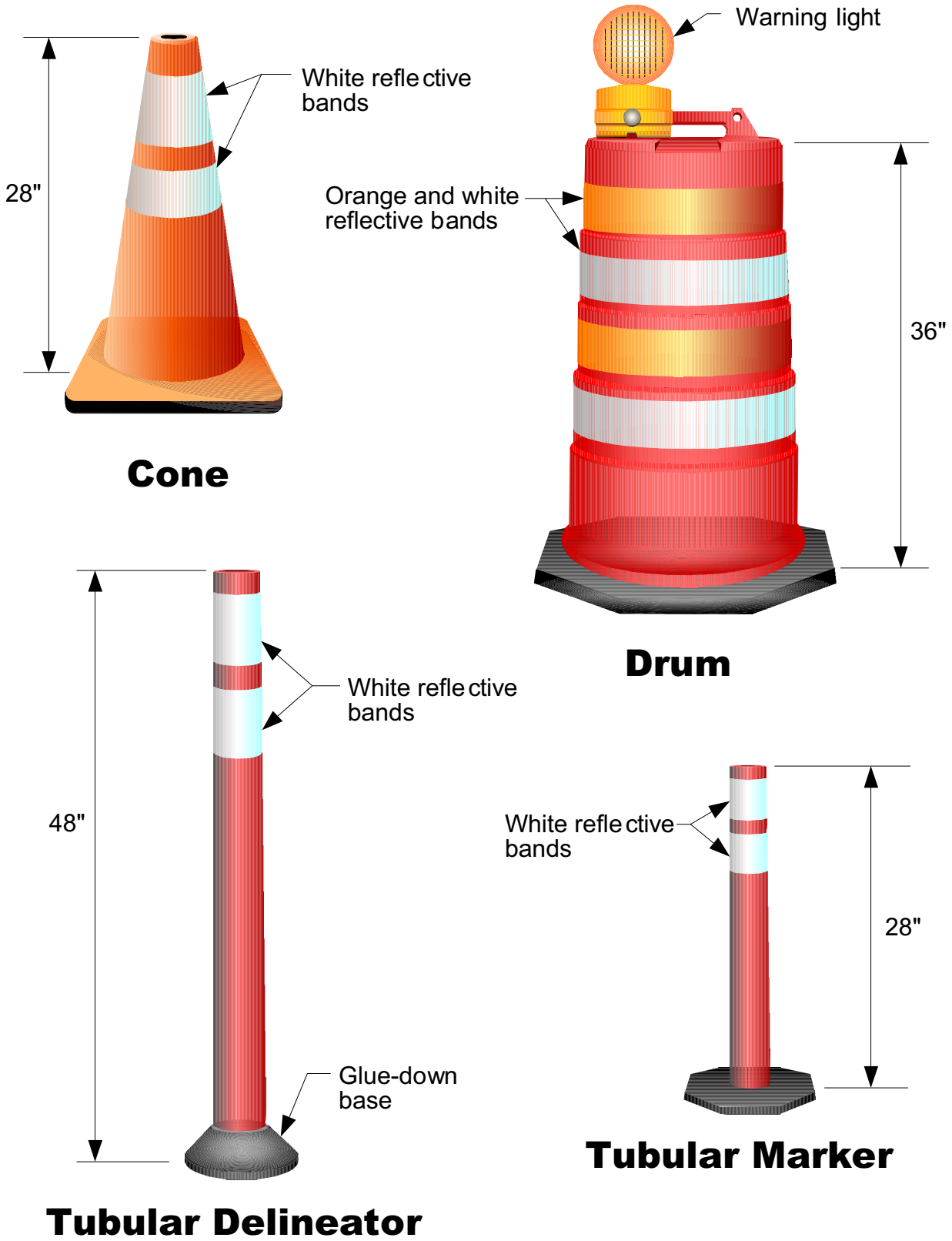

Channelization Devices
Figure 810-3

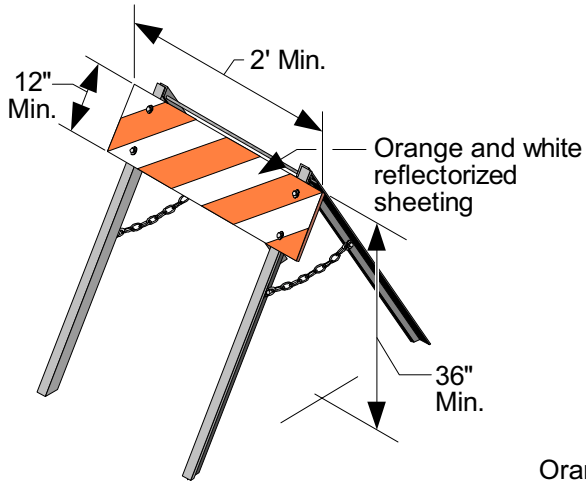

Type I Barricade

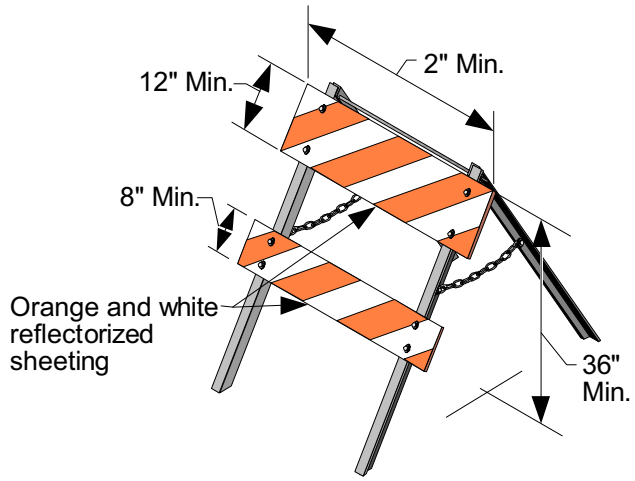

Type II Barricade

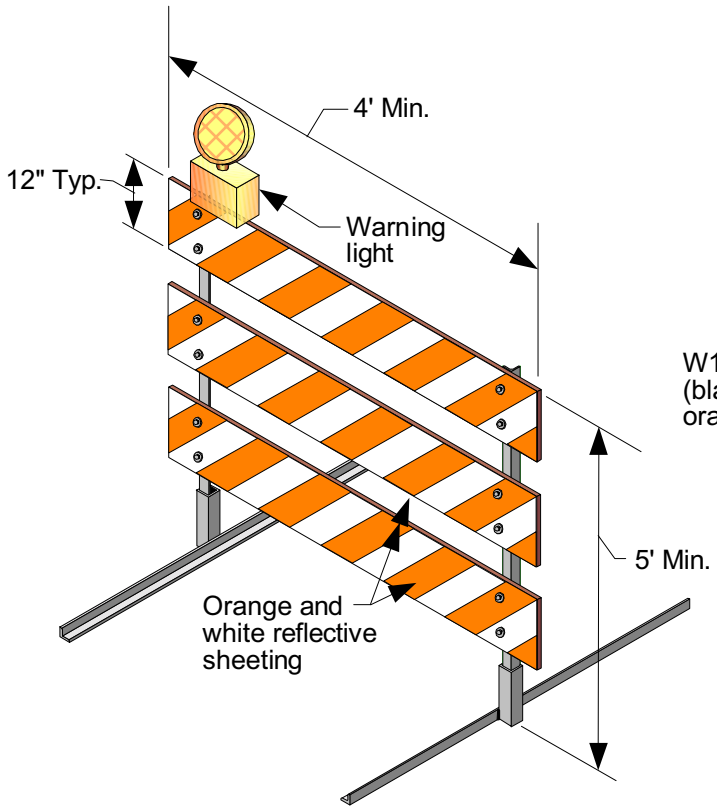

Type III Barricade

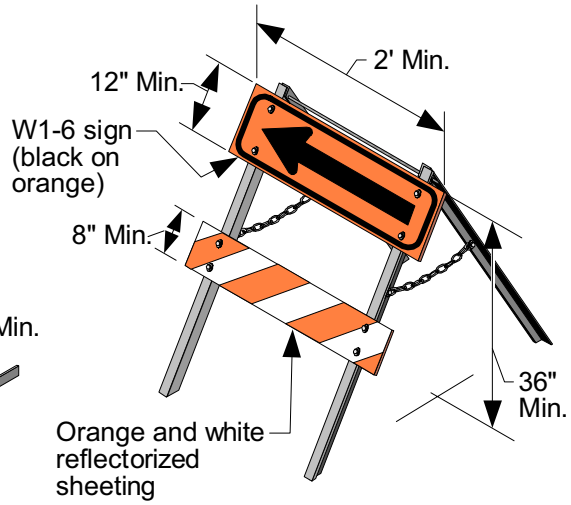

Direction Indicator Barricade

Barricade Types
Figure 810-4

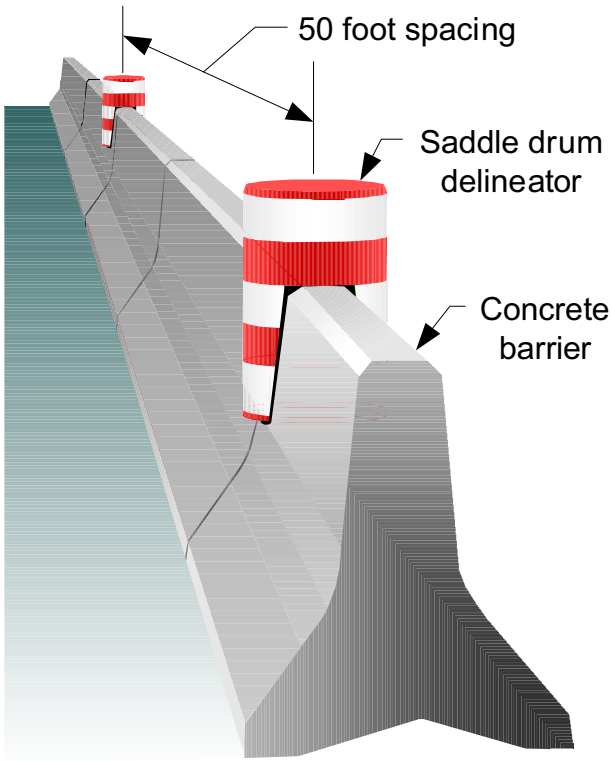

Saddle Drum Delineators

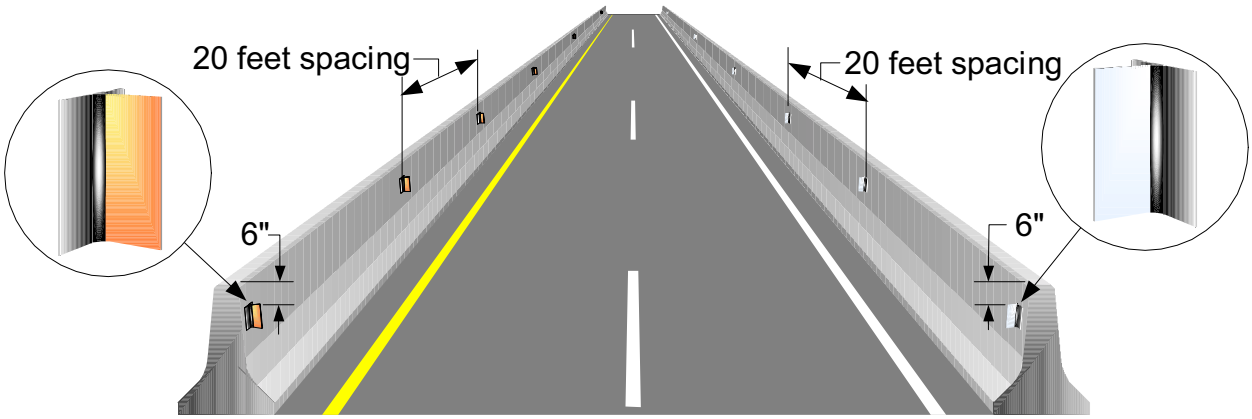

Concrete Barrier Delineators

Note: Color of delineator matches color of adjacent edge line.

Barrier Delineators
Figure 810-5

B
Barricades, 810-11
Barriers
    moveable, 810-10
    water-filled barrier, 810-10

C
Channelization devices, 810-11
Cones, 810-11

D
Drums, 810-11

E
Enhanced enforcement, 810-8

M
Moveable barriers, 810-10

P
PCMS, 810-10
Physical barriers, 810-9
Portable changeable message signs, 810-10
Portable traffic signals, 810-12
Public information, 810-1

R
Regulatory traffic control strategies, 810-8
Road closures, 810-5

S
Screening, 810-12

T
Temporary concrete barriers, 810-10
Temporary pavement markings, 810-12
TMA, 810-10
Traffic control plans, 810-9
Truck mounted attenuators, 810-10
Tubular markers, 810-11

W
Water-filled barriers, 810-9
Work zone classification, 810-2
    intermediate-term stationary work zones, 810-2
    long-term stationary work zones, 810-2

mobile work zones, 810-2
short-duration work zones, 810-2
short-term stationary work zones, 810-2
Work zone safety, 810-6
flaggers, 810-7
road users, 810-7
workers, 810-6
Work zone traffic control, 810-1
Work zone types, 810-3
crossover, 810-3
detour, 810-3
intermittent closure, 810-3
lane closure, 810-3
lane constriction, 810-3
median use, 810-3
multiple lane separation, 810-3
shared right of way, 810-3
shoulder use, 810-3
temporary bypass, 810-3

910 Intersections At Grade

910.01 General
910.02 References
910.03 Definitions
910.04 Design Considerations
910.05 Design Vehicle
910.06 Right-Turn Corners
910.07 Channelization
910.08 Roundabouts
910.09 U-Turns
910.10 Sight Distance at Intersections
910.11 Traffic Control at Intersections
910.12 Interchange Ramp Terminals
910.13 Procedures
910.14 Documentation

910.01 General

Intersections are a critical part of highway design because of increased conflict potential. Traffic and driver characteristics, bicycle and pedestrian needs, physical features, and economics are considered during the design stage to develop channelization and traffic control to enhance safe and efficient multimodal traffic flow through intersections.

This chapter provides guidance for designing intersections at grade, including at-grade ramp terminals. Guidelines for road approaches are in Chapter 920 and interchanges are in Chapter 940.

If an intersection design situation is not covered in this chapter, contact the Olympic Service Center (OSC) Design Office, for assistance.

910.02 References

Americans with Disabilities Act of 1990 (ADA)

Washington Administrative Code (WAC) 468-18-040, "Design standards for rearranged county roads, frontage roads, access roads, intersections, ramps and crossings"

WAC 468-52, "Highway access management—Access control classification system and standards"

Local Agency Guidelines (LAG), M 36-63, WSDOT

Manual on Uniform Traffic Control Devices for Streets and Highways (MUTCD), USDOT, FHWA; including the *Washington State Modifications to the MUTCD*, M 24-01, WSDOT

Standard Plans for Road, Bridge, and Municipal Construction (Standard Plans), M 21-01, WSDOT

Roundabouts: An Informational Guide, FHWA-RD-00-067, USDOT, FHWA

A Policy on Geometric Design of Highways and Streets (Green Book), AASHTO

Highway Capacity Manual (HCM), Special Report 209, Transportation Research Board, National Research Council

NCHRP 279
Intersection Channelization Design Guide

Highway Research Record No. 211
Aspects of Traffic Control Devices, pp 1-18, "Volume Warrants for Left-Turn Storage Lanes at Unsignalized Grade Intersections." Harmelink, M. D.

910.03 Definitions

bulb out A curb and sidewalk bulge or extension out into the roadway used to decrease the length of a pedestrian crossing. (See chapter 1025.)

conflict An event involving two or more road users, in which the action of one user causes the other user to make an evasive maneuver to avoid a collision.

crossroad The minor roadway at an intersection. At a stopped controlled intersection, the crossroad has the stop.

intersection angle The angle between any two intersecting legs at the point that the center lines intersect.

intersection area The area of the intersecting roadways bounded by the edge of traveled ways and the area of the adjacent roadways to the end of the corner radii, any marked crosswalks

adjacent to the intersection, or stop bar, but not less than 10 ft from the edge of shoulder of the intersecting roadway.

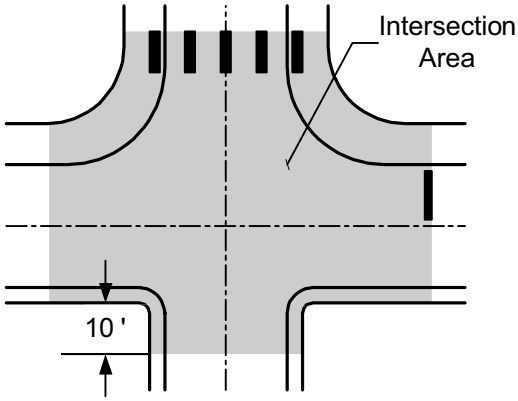

intersection at grade The general area where a state route or ramp terminal is met or crossed at a common grade or elevation by another state route, a county road, or a city street.

four leg intersection An intersection with four legs, as where two highways cross.

tee (T) intersection An intersection with three legs in the general form of a "T."

split tee A four leg intersection with the cross road intersecting the through roadway at two tee intersections. The crossroad must be offset at least the width of the roadway.

wye (Y) intersection An intersection with three legs in the general form of a "Y" and the angle between two legs is less than 60°.

intersection leg Any one of the roadways radiating from and forming part of an intersection.

entrance leg The lanes of an intersection leg for traffic entering the intersection.

exit leg The lanes of an intersection leg for traffic leaving the intersection.

Whether an intersection leg is an entrance leg or an exit leg depends on which movement is being analyzed. For two way roadways, each leg is an entrance leg for some movements and an exit leg for other movements.

intersection sight distance The distance that the driver of a vehicle on the crossroad can see along the through roadway, as compared to the distance required for safe operation.

intersection turning radii The geometric design of the intersection to allow the design vehicle for each turning movement to complete the turn without encroachment.

island A defined area within an intersection, between traffic lanes, for the separation of vehicle movements or for pedestrian refuge. It may be outlined with pavement markings or delineated by curbs. Within an intersection, a median is considered an island.

channelization island An island that separates traffic movements into definite paths of travel and guides traffic into the intended route.

divisional island An island introduced, on an undivided roadway, at an intersection to warn drivers of the crossroad ahead and regulate traffic through the intersection.

refuge island An island at or near a crosswalk or bicycle path to aid and protect pedestrians and bicyclists crossing the roadway.

median crossover An opening in a median provided for crossings by maintenance, law enforcement, emergency, and traffic service vehicles. (See Chapter 960.)

roundabout A circular intersection at which all traffic moves counterclockwise around a central island. (See Chapter 915)

rural intersection An intersection in a nonurban area.

urban intersection An intersection that is in one of the following areas:

- The area within the federal urban area boundary as designated by FHWA.
- An area characterized by intensive use of the land for the location of structures and receiving such urban services as sewers, water, and other public utilities and services normally associated with urbanized areas.
- An area with not more than twenty-five percent undeveloped land.

910.04 Design Considerations

Intersection design requires consideration of all potential users of the facility. This involves addressing the needs of a diverse mix of user groups including passenger cars, heavy vehicles of varying classifications, bicycles, and pedestrians. Often, meeting the needs of one user group requires a compromise in service to others. Intersection design balances these competing needs, resulting in appropriate levels of operation for all users.

In addition to reducing the number of conflicts, minimize the conflict area as much as possible while still providing for the required design vehicle (910.05). This is done to control the speed of turning vehicles and reduce vehicle, bicyclist, and pedestrian exposure.

(1) Traffic Analysis

Conduct a traffic analysis and an accident analysis to determine the design characteristics of each intersection. Include recommendations for channelization, turn lanes, acceleration and deceleration lanes, intersection configurations, illumination, bicycle and pedestrian accommodations, ADA requirements, and traffic control devices in the traffic analysis.

(2) Intersection Configurations

(a) **Intersection angle.** An important intersection design characteristic is the intersection angle. The allowable intersection angles are 75° to 105° for new, reconstructed, or realigned intersections.

Existing intersections with an intersection angle between 60° and 120° may remain. Intersection angles outside this range tend to restrict visibility, increase the area required for turning, increase the difficulty to make a turn, increase the crossing distance and time for vehicles and pedestrians, and make traffic signal arms difficult or impossible to design.

(b) **Lane alignment.** Design intersections with entrance lanes aligned with the exit lanes. Do not put angle points on the roadway alignments within intersection areas or on the through roadway alignment within 100 ft of the edge of traveled way of a crossroad. This includes short radius curves where both the PC and PT are within the intersection area. However, angle points within the intersection are allowed at intersections with a minor through movement, such as at a ramp terminal (Figure 910-19).

When practical, locate intersections so that curves do not begin or end within the intersection area.

(c) **Split Tee.** Avoid split tee intersections where there is less than the intersection spacing for the Highway Access Management Class. See 910.04(4). Split tee intersections with an offset distance to the left greater than the width of the roadway, but less than the intersection spacing, may be designed with justification. Evaluate the anticipated benefits against the increased difficulty in driving through the intersection and a more complicated traffic signal design.

Split tee intersections with the offset to the right have the additional disadvantages of overlapping left-turns, increased possibility of wrong way movements, and traffic signal design that is even more complicated. Do not design a split tee intersection with an offset to the right less than the intersection spacing for the class unless traffic is restricted to right-in right-out only.

(d) **Other Nonstandard Configurations.** Do not design intersections with nonstandard configurations such as:

- Intersections with offset legs.
- Intersections with more than four legs.
- Tee intersections with the major traffic movement making a turn.
- Wye intersections that are not a one-way merge or diverge.

A roundabout may be an alternative to these nonstandard configurations. (See 910.08 and Chapter 915.)

(3) Crossroads

When the crossroad is a city street or county road, design the crossroad crossroad beyond the intersection area according to the applicable standards shown in:

- Chapter 468-18 WAC.
- The LAG manual.

- The standards of the local agency that will be requested to accept the facility.

When the crossroad is a state facility, design the crossroad according to the applicable design level and functional class (Chapters 325, 430, and 440). Continue the cross slope of the through roadway shoulder as the grade for the crossroad. Use a vertical curve that is at least 60 ft long to connect to the grade of the crossroad.

In areas that experience accumulations of snow and ice and for all legs that will require traffic to stop, design a maximum grade of ±4 percent for a length equal to the anticipated queue length for stopped vehicles.

(4) Intersection Spacing

Adequate intersection spacing is required to provide for safety and the desired operational characteristics for the highway. Provide enough space between intersections for left-turn lanes and storage length. Space signalized intersections, and intersections expected to be signalized, to maintain efficient signal operation. It is desirable to space intersections so that queues will not block an adjacent intersection.

The minimum spacing for highways with limited access control is covered in Chapter 1420. For other highways, the minimum spacing is dependent on the Highway Access Management Class. Figure 910-1 gives the minimum spacing between intersections for each Highway Access Management Class.

Highway Access Management Class	Intersection Spacing (mi)
1	1
2	1/2
3(1)	1/2
4(1)	1/2
5(1)	1/4
(1)Spacing is for rural intersections and urban intersections that might require signalization.	

Minimum Intersection Spacing
Figure 910-1

A deviation for less than the minimum spacing in Figure 910-1 will be considered only when no reasonable alternative access exists. For Class 1 highways, intersection spacing less than 1/2 mi is not permitted (WAC 468-52-040).

910.05 Design Vehicle

The physical characteristics of the design vehicle control the geometric design of the intersection. The following design vehicle types are commonly used:

Design Symbol	Vehicle Type
P	Passenger car, including light delivery trucks.
BUS	Single unit bus
A-BUS	Articulated bus
SU	Single unit truck
WB-40	Semitrailer truck, overall wheelbase of 40 ft
WB-50	Semitrailer truck, overall wheelbase of 50 ft
WB-67	Semitrailer truck, overall wheelbase of 67 ft
MH	Motor home
P/T	Passenger car pulling a camper trailer
MH/B	Motor home pulling a boat trailer

Design Vehicle Types
Figure 910-2

The geometric design of an intersection requires identifying and addressing the needs of all intersection users. There are competing design objectives when considering the turning requirements of the larger design vehicles and the crossing requirements of pedestrians. To reduce the operational impacts of large design vehicles, turn radii are designed so that large vehicles can complete their turn without encroaching on the adjacent lanes at either the entrance or the exit

legs of the turn. This results in larger radii that causes increased pavement areas, longer pedestrian crossing distances, and longer traffic signal arms.

To reduce the intersection area, a smaller design vehicle is used or encroachment on the adjacent same direction lanes at exit legs of the turn is allowed. This reduces the potential for vehicle/pedestrian conflicts, decreases pedestrian crossing distance, and controls speeds of turning vehicles. The negative impacts include capacity reductions and greater speed differences between turning vehicles and through vehicles.

Select a design vehicle that is the largest vehicle that normally uses the intersection. The primary use of the design vehicle is to determine turning radius requirements for each leg of the intersection. It is possible for each leg to have a different design vehicle. Figure 910-3 shows the minimum design vehicles. As justification to use a smaller vehicle, include a traffic analysis showing that the proposed vehicle is appropriate.

Intersection Type	Design Vehicle
Junction of Major Truck Routes	WB-67
Junction of State Routes	WB-50
Ramp Terminals	WB-50
Other Rural	WB-50
Industrial	WB-40
Commercial	SU(1)(2)
Residential	SU(1)(2)

(1)To accommodate pedestrians, the P vehicle may be used as the design vehicle if justification, with a traffic analysis, is documented.

(2)When the intersection is on a transit or school bus route, use the BUS design vehicle as a minimum. See Chapter 1060 for additional guidance for transit facilities.

Intersection Design Vehicle
Figure 910-3

To minimize the disruption to other traffic, design the intersection to allow the design vehicles to make each turning movement without encroaching on curbs, opposing lanes, or same-direction lanes at the entrance leg. Use turning path templates (Figures 910-7a through 7c or templates from another published source) to verify that the design vehicle can make the turning movements.

Encroachment on same-direction lanes of the exit leg and the shoulder might be necessary to minimize crosswalk distances; however, this might negatively impact vehicular operations. Document and justify the operational tradeoffs associated with this encroachment. When encroachment on the shoulder is required, increase the pavement structure to support the anticipated traffic.

Design each turning movement so the largest vehicle that is anticipated to occasionally use the intersection can make the turn without leaving the paved shoulders or encroaching on a sidewalk. Use the WB-67 as the largest vehicle at all state route to state route junctions. Document and justify any required encroachment into other lanes, and any degradation of intersection operation.

910.06 Right-Turn Corners

The geometric design of an intersection requires identifying and addressing the needs of all intersection users. For the design of right turn corners, there can be competing design objectives when considering the turning requirements of the design vehicle and the crossing requirements of pedestrians. To reduce the operational impacts of large trucks, right-turn radii are designed so that the truck can complete its turn without encroaching on the adjacent lanes at either the entrance or the exit legs of the turn. This results in larger corner radii, increased pavement area and pedestrian crossing distance, a larger conflict area, and higher vehicle turning speeds.

When pedestrian issues are a primary concern, the design objectives become one of reducing the potential for vehicle/pedestrian conflicts. This is done by minimizing pedestrian crossing distance and controlling speeds of turning vehicles. This normally leads to right-corner designs with smaller turning radii. The negative

impacts include capacity reductions and greater speed differences between turning vehicles and through vehicles.

Pedestrian refuge islands can also improve pedestrian safety. Pedestrian refuge islands minimize the crossing distance, reduce the conflict area, and minimize the impacts on vehicular traffic. When designing islands, speeds can be reduced by designing the turning roadway with a taper or large radius curve at the beginning of the turn and a small radius curve at the end. This allows larger islands while forcing the turning traffic to slow down.

Figure 910-8 shows right-turn corner designs for the design vehicles. These are considered the minimum pavement area to accommodate the design vehicles without encroachment on the adjacent lane at either leg of the curve.

With justification, right-turn corner designs given in Figure 910-8 may be modified. Document the benefits and impacts of the modified design including: changes to vehicle pedestrian conflicts, vehicle encroachment on the shoulder or adjacent same direction lane at the exit leg, capacity restrictions for right-turning vehicles or other degradation of intersection operations, and the effects on other traffic movements. To verify that the design vehicle can make the turn, include a plot of the design showing the design vehicle turning path template.

910.07 Channelization

Channelization is the separation or regulation of traffic movements into delineated paths of travel to facilitate the safe and orderly movement of vehicles, bicycles, and pedestrians.

Painted or plastic pavement markings are normally used to delineate travel paths. (See Chapter 830 and the standard plans for details.)

(1) Left-Turn Lanes

Left-turn lanes provide storage, separate from the through lanes, for left-turning vehicles waiting for a signal to change or for a gap in opposing traffic. (See 910.07(3) for a discussion on speed change lanes.)

Design left-turn channelization to provide sufficient operational flexibility to function under peak loads and adverse conditions.

(a) **One-Way Left-Turn Lanes** are separate storage lanes for vehicles turning left from one roadway onto another. When recommended, one-way left-turn lanes may be an economical way to lessen delays and accident potential involving left-turning vehicles. In addition, they can allow deceleration clear of the through traffic lanes. When considering left-turn lanes, consider impacts to all intersection movements and users.

At signalized intersections, use a traffic signal analysis to determine if a left-turn lane is needed and what the storage requirements are. (See Chapter 850.)

At unsignalized intersections, use the following as a guide to determine whether or not to provide one-way left-turn lanes:

- A traffic analysis indicates that a left-turn lane will reduce congestion. On two-lane highways, use Figure 910-9a, based on total traffic volume (DHV) for both directions and percent left-turn traffic, to determine if further investigation is needed. On four-lane highways, use Figure 910-9b to determine if a left-turn lane is recommended.
- An accident study indicates that a left-turn lane will reduce accidents.
- Restrictive geometrics require left-turning vehicles to slow greatly below the speed of the through traffic.
- There is less than decision sight distance at the approach to the intersection.

An HCM analysis may also be used to determine if left-turn lanes are necessary to maintain the desired level of service.

Determine the storage length required on two-lane highways by using Figures 910-10a through 10c. On four-lane highways use Figure 910-9b. These lengths do not consider trucks. Use Figure 910-4 for storage length when trucks are present.

Storage* Length (ft)	% Trucks in Left-Turn Movement				
	10	20	30	40	50
100	125	125	150	150	150
150	175	200	200	200	200
200	225	250	275	300	300
250	275	300	325	350	375
300	350	375	400	400	400
*Length from Figures 910-9b, 10a, 10b, or 10c.					

Left-Turn Storage With Trucks (ft)
Figure 910-4

Design opposing left-turn vehicle paths with a minimum 4 ft clearance between opposing turning paths.

Where one-way left-turn channelization with curbing is to be provided, ensure that surface water will drain.

Provide illumination at left-turn lanes in accordance with the guidelines in Chapter 840.

At signalized intersections with high left-turn volumes, double left-turn lanes may be needed to maintain the desired level of service. A throat width of 30 to 36 ft is desirable on the exit leg of the turn to offset vehicle offtracking and the difficulty of two vehicles turning abreast. Use turning path templates to verify that the design vehicle can complete the turn. Where the design vehicle is a WB-40 or larger and the truck volumes are low, consider providing for the design vehicle and an SU turning abreast rather than two design vehicles turning abreast.

Figures 910-11a through 11d show one-way left-turn geometrics. Figure 910-11a shows widening to accommodate the new lane. Figures 910-11b and 11c show the use of a median.

1. **Widening (Figure 910-11a).** It is desirable that offsets and pavement widening be symmetrical about the center line or base line. Where right of way or topographic restrictions, crossroad alignments, or other circumstances preclude symmetrical widening, pavement widening may be on one side only.

2. **Divided Highways (Figure 910-11b and 11c).** Widening is not required for left-turn lane channelization where medians are 13 ft wide or wider. The median acceleration lane shown on the figures can also be provided where the median is 23 ft or wider. The median acceleration lane might not be necessary at a signalized intersection. When a median acceleration lane is to be used, design it in accordance with 910.07(3) Speed Change Lanes.

At intersections on divided highways where channelized left turn lanes are not provided, consider a minimum protected storage area as shown on Figure 910-11d.

(b) **Two-Way Left-Turn Lanes** (TWLTL) are located between opposing lanes of traffic. They are used by vehicles making left turns from either direction, either from or onto the roadway.

Use TWLTLs only in an urban setting where there are no more than two through lanes in each direction. Consider installation of TWLTLs where:

- An accident study indicates that a TWLTL will reduce accidents.
- There are closely spaced access points or minor street intersections.
- There are unacceptable through traffic delays or capacity reductions because of left turning vehicles.

TWLTL can reduce delays to through traffic, reduce rear-end accidents, and provide separation between opposing lanes of traffic. However, they do not provide a safe refuge for pedestrians, can create problems with closely spaced access points, and can encourage strip development with closely spaced access points. Consider other alternatives, before using TWLTL, such as prohibiting midblock left-turns and providing for U-turns.

The basic design for a TWLTL is illustrated on Figure 910-11e. Additional criteria are:

- The desirable length of a TWLTL is not less than 250 ft.

- Provide illumination in accordance with the guidelines in Chapter 840.
- Pavement markings, signs, and other traffic control devices must be in accordance with the MUTCD and the Standard Plans.
- Provide clear channelization when changing from TWLTL to one-way left-turn lanes at an intersection.

(2) Right-Turn Lanes and Drop Lanes

Right-turn movements influence intersection capacity even though there is no conflict between right-turning vehicles and opposing traffic. Right-turn lanes might be needed to maintain efficient intersection operation. Use the following as guidelines to determine when to consider right-turn lanes:

- Recommendation from Figure 910-12 based on same direction approach and right-turn traffic volumes.
- An accident study indicates that a right-turn lane will result in an overall accident reduction.
- Presence of pedestrians who require right-turning vehicles to stop in the through lanes.
- Restrictive geometrics that require right-turning vehicles to slow greatly below the speed of the through traffic.
- Less than decision sight distance at the approach to the intersection.

For unsignalized intersections, see 910.07(3) Speed Change Lanes for guidance on right-turn lane lengths. For signalized intersections, use a traffic signal analysis to determine if a right-turn lane is needed and the length requirement. (See Chapter 850.)

A capacity analysis may be used to determine if right-turn lanes are necessary to maintain the desired level of service.

When designing right-turn lanes at signalized intersections, consider reducing the shoulder width to not more than 4 ft. This reduces the pavement widening for the turn lane and removes the temptation for vehicles to use the shoulder to bypass the other vehicles in the turn lane.

Where adequate right of way exists, providing right-turn lanes is relatively inexpensive and can provide increased safety and operational efficiency.

The right-turn pocket or the right-turn taper (Figure 910-13) may be used at any minor intersection where a deceleration lane is not required and turning volumes indicate a need as set forth in Figure 910-12. These designs will cause less interference and delay to the through movement by offering an earlier exit to right-turning vehicles.

If the right-turn pocket is used, Figure 910-13 shows taper lengths for various posted speeds.

A lane may be dropped at an intersection with a turn-only lane or beyond the intersection with an acceleration lane (Figure 910-15.) Do not allow a lane-reduction taper to cross an intersection or end less than 100 ft before an intersection.

When a lane is dropped beyond a signalized intersection, provide a lane of sufficient length to allow smooth merging. For facilities with a posted speed of 45 mph or higher, use a minimum length of 1500 ft. For facilities with a posted speed less than 45 mph, provide a lane of sufficient length so that the advanced lane reduction warning sign will be placed not less than 100 ft beyond the intersection area.

(3) Speed Change Lanes

A speed change lane is an auxiliary lane primarily for the acceleration or deceleration of vehicles entering or leaving the through traveled way. Speed change lanes are normally provided for at-grade intersections on multilane divided highways with access control. Where roadside conditions and right of way allow, speed change lanes may be provided on other through roadways. Justification for a speed change lane depends on many factors such as speed, traffic volumes, capacity, type of highway, the design and frequency of intersections, and accident history.

A deceleration lane is advantageous because, if a deceleration lane is not provided the driver leaving the highway must slow down in the through lane regardless of following traffic.

An acceleration lane is not as advantageous because entering drivers can wait for an opportunity to merge without disrupting through traffic.

When either deceleration or acceleration lanes are to be used, design them in accordance with Figures 910-14 and 15. When the design speed of the turning traffic is greater than 20 mph, design the speed change lane as a ramp in accordance with Chapter 940. When a deceleration lane is used with a left-turn lane, add the deceleration length to the storage length.

(4) Islands

An island is a defined area within an intersection between traffic lanes for the separation of vehicle movements or for pedestrian refuge. Within an intersection, a median is considered an island. Design islands to clearly delineate the traffic channels to drivers and pedestrians.

Traffic islands perform these functions:

- Channelization islands control and direct traffic movement.
- Divisional islands separate traffic movements.
- Refuge islands provide refuge for pedestrians.
- Islands can provide for the placement of traffic control devices and luminaires.
- Islands can provide areas within the roadway for landscaping.

(a) **Size and Shape.** Divisional and refuge islands are normally elongated and at least 4 ft wide and 20 ft long. (Mountable curb, used to discourage turn movements, is not a divisional island.)

Channelization islands are normally triangular. In rural areas, 75 ft^2 is the minimum island area and 100 ft^2 is desirable. In urban areas where posted speeds are 25 mph or less, smaller islands are acceptable. Use islands with at least 200 ft^2 if pedestrians will be crossing or traffic control devices or luminaires will be installed.

Design triangular shaped islands as shown on Figure 910-16a through 16c. The shoulder and offset widths illustrated are for islands with barrier curbs. Where painted islands are used, such as in rural areas, these widths are desirable but may be omitted.

Avoid shoulders wider than 6 ft at islands because the wider shoulders can appear to be another lane.

Island markings may be supplemented with reflective raised pavement markers.

Barrier-free access must be provided at crosswalk locations where raised islands are used. See Chapter 1025.

(b) **Location.** Design the approach ends of islands to provide adequate visibility to alert the motorist of their presence. Position the island so that a smooth transition in vehicle speed and direction is attained. Begin transverse lane shifts far enough in advance of the intersection to allow gradual transitions. Avoid introducing islands on a horizontal or vertical curve. If the use of an island on a curve cannot be avoided, provide adequate sight distance, illumination, or extension of the island.

(c) **Compound Right-Turn Lane.** To design large islands, the common method is to use a large radius curve for the turning traffic. While this does provide a larger island, it also encourages higher turning speeds. Where pedestrians are a concern, higher turning speeds are undesirable. An alternative is a compound curve with a large radius followed by a small radius (Figure 910-16c). This design forces the turning traffic to slow down.

(d) **Curbing.** Provide barrier curb for:

- Islands with luminaires, signals, or other traffic control devices.
- Pedestrian refuge islands.

In addition consider curbing for:

- Divisional and channelizing islands.
- Landscaped islands.

Avoid using curbs if the same objective can be attained with pavement markings.

Where curbing is to be provided, ensure that surface water will drain.

Snow removal operations can be hampered by curbs and raised islands. Contact the region's Operations Engineer when considering raised channelization in areas of heavy snowfall.

In general, neither mountable nor barrier curbs are used on facilities with a posted speed of 45 mph or greater.

910.08 Roundabouts

Modern roundabouts are circular intersections. They can be an effective intersection type.

Modern roundabouts differ from the old rotaries and traffic circles in two important respects: they have a smaller diameter, which lowers speeds; and they have splitter islands that provide entry constraints, slowing down the entering speeds.

When well designed, roundabouts are an efficient form of intersection control. They have fewer conflict points, lower speeds, easier decision making, and they require less maintenance. When properly designed and located, they have been found to reduce injury accidents, traffic delays, fuel consumption, and air pollution. Roundabouts also permit U-turns.

Consider roundabouts at intersections with the following characteristics:

- Where stop signs result in unacceptable delays for the crossroad traffic. Roundabouts reduce the delays for the cross road, but increase the delays for the through roadway.
- With a high left-turn percentage. Unlike most intersection types, roundabouts can operate efficiently with high volumes of left-turning traffic.
- With more than four legs. When the intersection cannot be modified by closing or relocating legs, a roundabout can provide a solution.
- Where a disproportionately high number of accidents involve crossing or turning traffic.
- Where the major traffic movement makes a turn.
- Where traffic growth is expected to be high and future traffic patterns are uncertain.
- Where it is not desirable to give priority to either roadway.

There are some disadvantages with roundabouts. Roundabouts do not allow for a primary roadway to have priority because all legs entering a roundabout are treated the same. Also, all traffic entering a roundabout is required to reduce speed. Therefore, roundabouts are not appropriate on high speed facilities, where traffic flows are unbalanced, or where an arterial intersects a collector or local road.

See Chapter 915 for information and requirements on the design of roundabouts.

910.09 U-Turns

For divided highways without full access control that have access points where a median prevents left turns, consider providing locations designed to allow U-turns. Normally, the U-turn opportunities are provided at intersections; however, where intersections are spaced far apart, consider median openings between intersections to accommodate U-turns. Use the desirable U-turn spacing (Figure 910-5) as a guide to determine when to consider U-turn locations between intersections. When the U-turning volumes are low, use longer spacing.

	U-Turn Spacing	
	Desirable	**Minimum**
Urban(1)	1,000 ft	(2)
Suburban	1/2 mi	1/4 mi(3)
Rural	1 mi	1/2 mi

(1)For design speeds greater than 45 mph use suburban spacing.

(2)The minimum spacing is the acceleration lane length from a stop plus 300 ft.

(3)For design speeds greater than 50 mph, the minimum spacing is the acceleration lane length from a stop plus 300 ft.

U-Turn Spacing
Figure 910-5

When designing U-turn locations, use Figure 910-17 as a guide. Where the median is less than 40 ft wide and a large design vehicle is required, consider the use of a U-turn roadway.

Document the need for U-turn locations, the spacing used, and justify the selected design vehicle.

910.10 Sight Distance at Intersections

For traffic to move safely through intersections, drivers need to be able to see stop signs, traffic signals, and oncoming traffic in time to react accordingly.

Provide decision sight distance, where practical, in advance of stop signs, traffic signals, and roundabouts. See Chapter 650 for guidance.

The driver of a vehicle that is stopped, waiting to cross or enter a through roadway, needs obstruction-free sight triangles in order to see enough of the through roadway to safely complete all legal maneuvers before an approaching vehicle on the through roadway can reach the intersection. Use Figure 910-18a to determine minimum sight distance along the through roadway.

The sight triangle is determined as shown in Figure 910-18b. Within the sight triangle, lay back the cut slopes and remove, lower, or move hedges, trees, signs, utility poles, and anything else large enough to be a sight obstruction. Consider eliminating parking so sight distance is not obstructed.

The 18 ft from the edge of traveled way for the sight triangle in Figure 910-18b is for a vehicle 10 ft from the edge of traveled way. This is the minimum distance for the sight triangle. When the stop bar is placed more than 10 ft from the edge of traveled way, consider providing the sight triangle to a point 8 ft back of the stop bar.

Provide a clear sight triangle for a P vehicle at all intersections. In addition to this, provide a clear sight triangle for the SU vehicle for rural highway conditions. If there is significant combination truck traffic, use the WB-50 or WB-67 rather than the SU. In areas where SU or WB vehicles are minimal, and right of way restrictions prohibit adequate sight triangle clearing, only the P vehicle need be considered.

At some intersections, the turning volume from a stop-controlled crossroad is significant enough to conflict with vehicles on the through roadway. Sight distances shown on Figure 910-6 are desirable at these intersections. This is the sight distance required for a P vehicle to turn left or right onto a two-lane highway and attain average running speed without being overtaken by an approaching vehicle going the same direction at the average running speed.

Design Speed (mph)	Sight Distance (ft)
25	300
30	380
35	480
40	590
45	730
50	860
60	1,150
70	1,560

Sight Distance for Turning Vehicles
Figure 910-6

Designs for movements that cross divided highways are influenced by the median widths. If the median is wide enough to store the design vehicle, sight distances are determined in two steps. The first step is for crossing from a stopped position to the median storage; the second step is for the movement, either across, or left into the through roadway.

Design ramp terminal sight distance as for at-grade intersections with a turning movement. An added element at ramp terminals is the grade separation structure. Figure 910-18b gives the sight distance considerations in the vicinity of a structure. In addition, when the crossroad is an undercrossing, check the sight distance under the structure graphically using a truck eye height of 6 ft and an object height of 1.5 ft.

Document a brief description of the intersection area, sight distance restrictions, and traffic characteristics to support the design vehicle and sight distances chosen.

910.11 Traffic Control at Intersections

Intersection traffic control is the process of moving traffic safely through areas of potential conflict where two or more roadways meet. Signs, signals, channelization, and physical layout are the major tools used to establish intersection control.

There are three objectives to intersection traffic control that can greatly improve intersection operations.

- **Maximize Intersection Capacity.** Since two or more traffic streams cross, converge, or diverge at intersections, capacity of an intersection is normally less than the roadway between intersections. It is usually necessary to assign right of way through the use of traffic control devices to maximize capacity for all users of the intersection. Turn prohibitions may be used to increase intersection capacity.
- **Reduce Conflict Points.** The crossing, converging, and diverging of traffic creates conflicts which increase the potential for accidents involving turning vehicles. Establishing appropriate controls can reduce the possibility of two cars attempting to occupy the same space at the same time. Pedestrian accident potential can also be reduced by appropriate controls.
- **Priority of Major Streets.** Traffic on major routes is normally given the right of way over traffic on minor streets to increase intersection operational efficiency.

If a signal is being considered or exists at an intersection that is to be modified, a preliminary signal plan is required (Chapter 850). If a new signal permit is required, it must be approved before the design is approved.

A proposal to install a traffic signal or a roundabout on a state route, either NHS or Non-NHS, with a posted speed limit of 45 mph or higher requires an analysis of alternatives, approved by the region's Traffic Engineer with review and comment by the Olympia Service Center Design Office, prior to proceeding with the design. Include the following alternatives in the analysis:

- Channelization, providing deceleration lanes, storage, and acceleration lanes for left- and right-turning traffic.
- Right-off /right-on with U-turn opportunities.
- Grade separation.
- Roundabouts.
- Traffic control signals.

Include a copy of the analysis with the preliminary signal plan or roundabout justification.

910.12 Interchange Ramp Terminals

The design to be used or modified for use on one-way ramp terminals with stop or traffic signal control at the local road is shown on Figure 910-19. Higher volume intersections with multiple ramp lanes are designed individually.

Due to probable development of large traffic generators adjacent to an interchange, width for a median on the local road is desirable whenever such development is believed imminent. This allows for future left-turn channelization. Use median channelization when justified by capacity determination and analysis, or by the need to provide a smooth traffic flow.

Determine the number of lanes for each leg by capacity analysis methods assuming a traffic signal cycle, preferably 45 or 60 seconds in length, regardless of whether a signal is used or not. Consider all terminals in the analysis.

Adjust the alignment of the intersection legs to fit the traffic movements and to discourage wrong way movements. Use the allowed intersecting angles of 75° to 105° (60° to 120° for modified design level) to avoid broken back or reverse curves in the ramp alignment.

910.13 Procedures

Document design considerations and conclusions in accordance with Chapter 330. For highways with access control, see Chapter 1420 for access control requirements.

(1) Approval

An intersection is approved in accordance with Chapter 330. When required, the following items must be in the project file before an intersection may be approved:

- Traffic analysis
- Deviations approved in accordance with Chapter 330
- Preliminary traffic signal plan approved by the OSC Traffic Office. (See Chapter 850.)
- Intersections with roundabouts require OSC Design Office approval. See Chapter 915 for approval procedures.

(2) Intersection Plans

Intersection plans are required for any increases in capacity (turn lanes) of an intersection, modification of channelization, or change of intersection geometrics. Support the need for intersection or channelization modifications with history, school bus and mail route studies, hazardous materials route studies, public meeting comments, and so forth.

Include the following as applicable:

- Drawing of the intersection showing existing and new alignment of the main line and crossroad.
- Main line stationing of the intersection and angle between intersection legs.
- Curve data on main line and crossroads.
- Right of way lines.
- Location and type of channelization.
- Width of lanes and shoulders on main line and crossroads (Chapter 440 and 640).
- Proposed access control treatment (Chapter 1420).
- Traffic data including volumes for all movements and vehicle classifications.
- Classes of highway and design speeds for main line and crossroads (Chapter 440).
- Whether or not the intersection will be signalized or illuminated.
- A copy of all deviations, if any.

(3) Local Agency or Developer Initiated Intersections

There is a separate procedure for local agency or developer-initiated projects at intersections with state routes. The project initiator submits an intersection plan, and the documentation of design considerations that led to the plan, to the region for approval. For those plans requiring a deviation, the deviation must be approved in accordance with Chapter 330 prior to approval of the plan. After the plan approval, the region prepares a construction agreement with the project initiator. (See the *Utilities Manual*.)

910.14 Documentation

The following documents are to be preserved for future reference in the project file. See Chapter 330.

- ☐ Traffic analyses
- ☐ Accident studies
- ☐ Split tee intersection evaluation
- ☐ Design vehicle selection justifications
- ☐ Justification for encroachment on other lanes
- ☐ Largest vehicle documentation and justification
- ☐ Justification for right-turn corner design modification
- ☐ Left-turn lane justification
- ☐ Two-way left-turn lane justification
- ☐ Right-turn lane justification
- ☐ U-turn documentation
- ☐ Sight distance documentation
- ☐ Approved traffic signal plans
- ☐ Intersection plans and supporting information

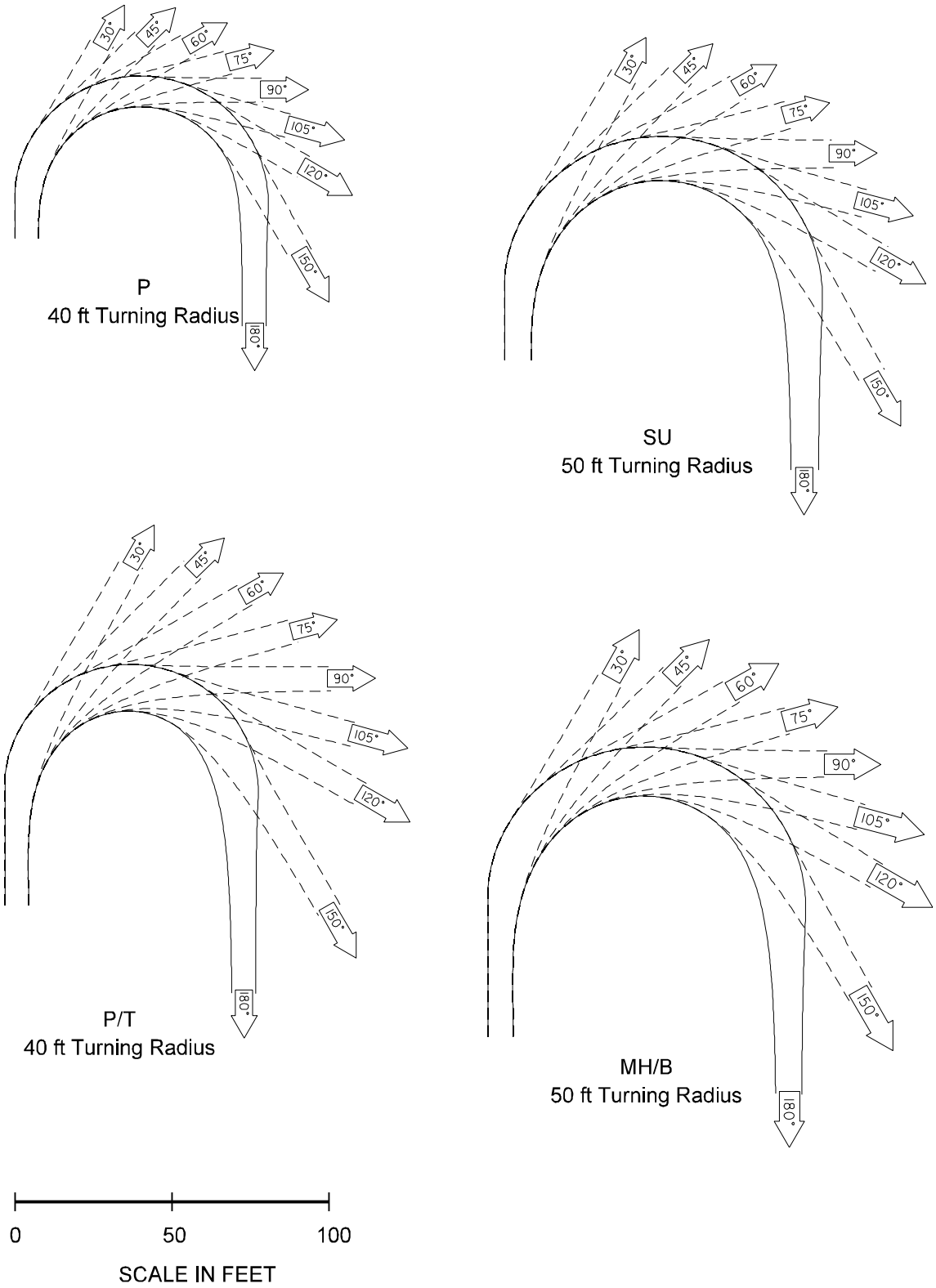

Turning Path Template
Figure 910-7a

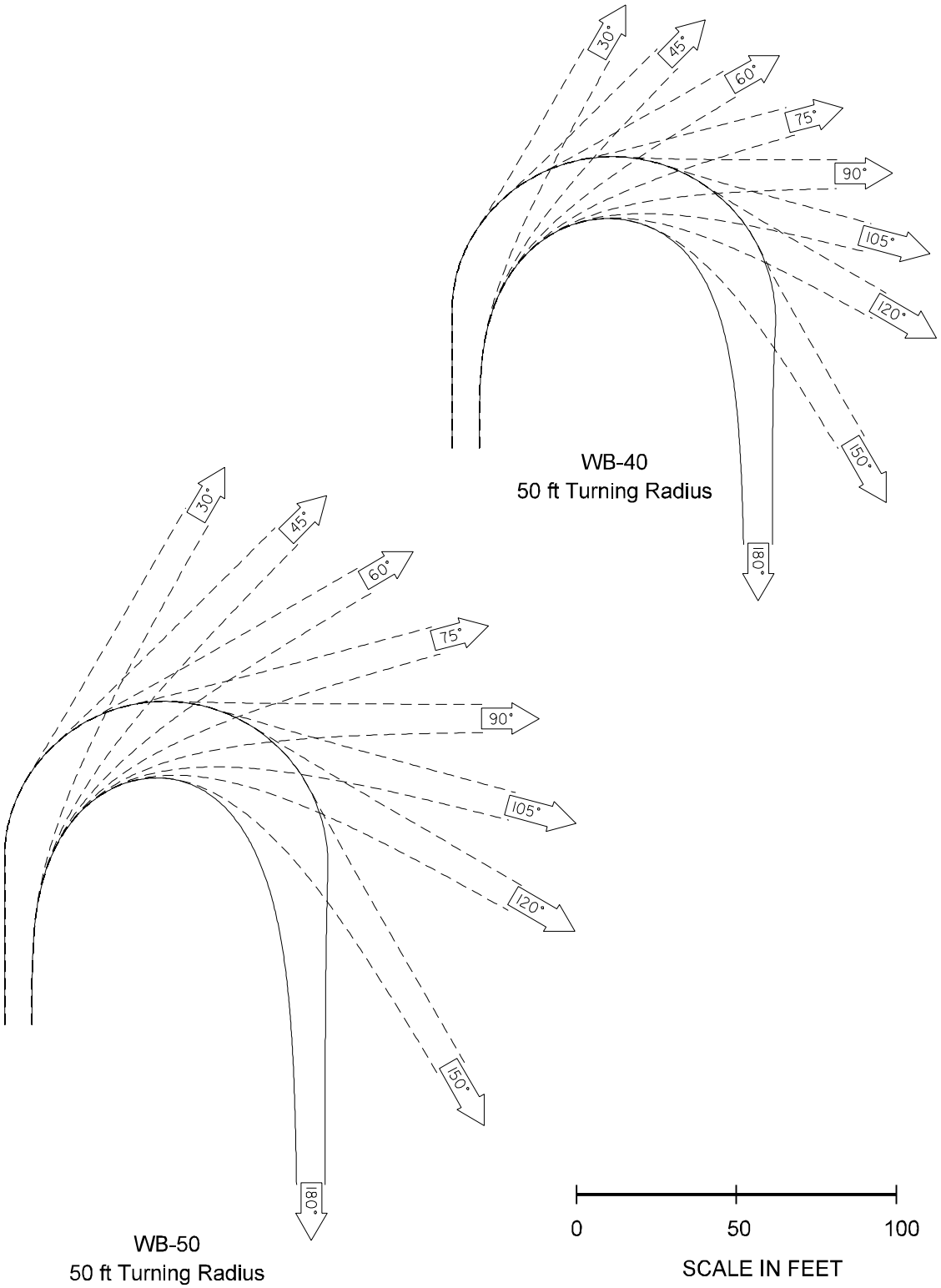

Turning Path Template
Figure 910-7b

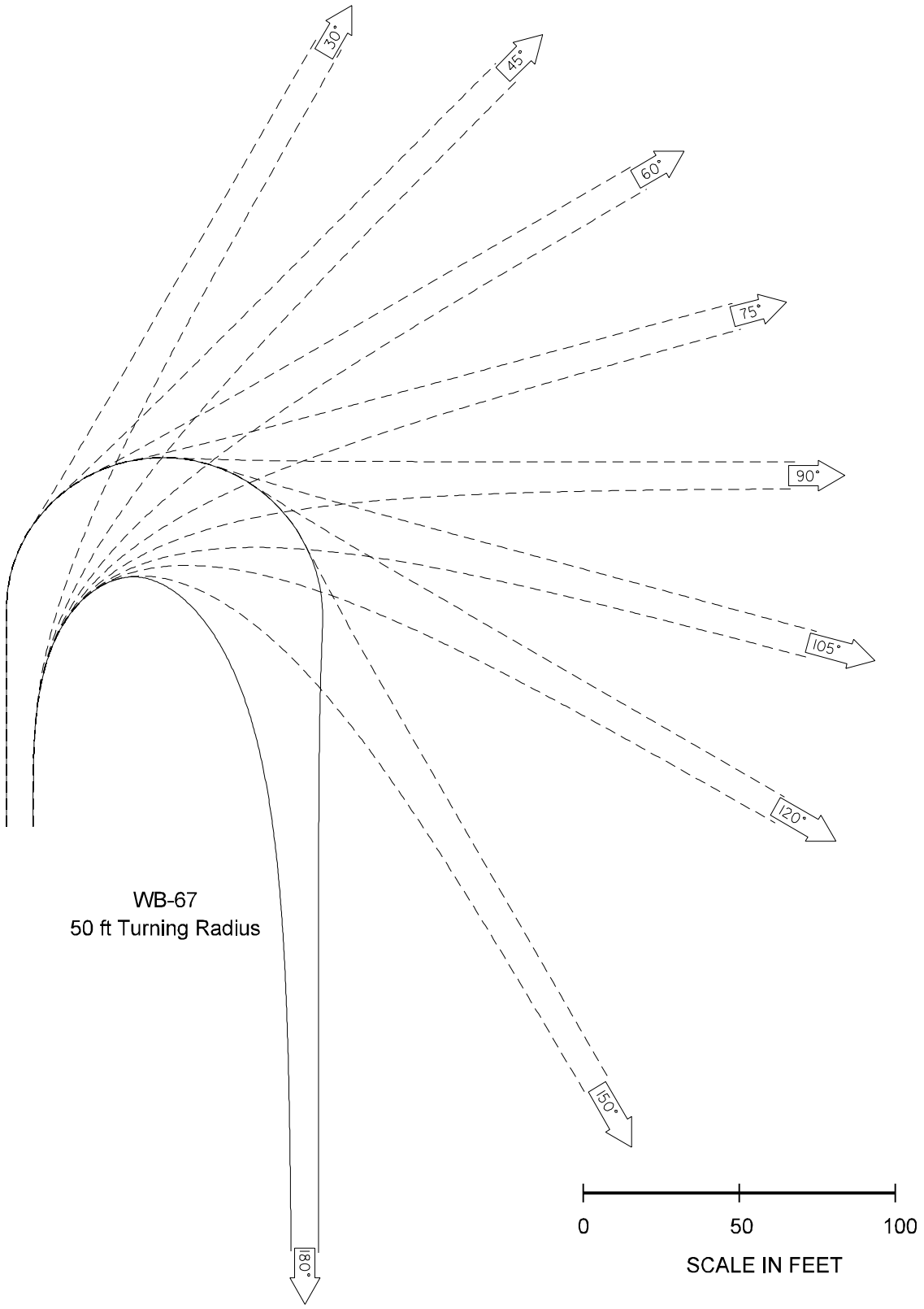

Turning Path Template
Figure 910-7c

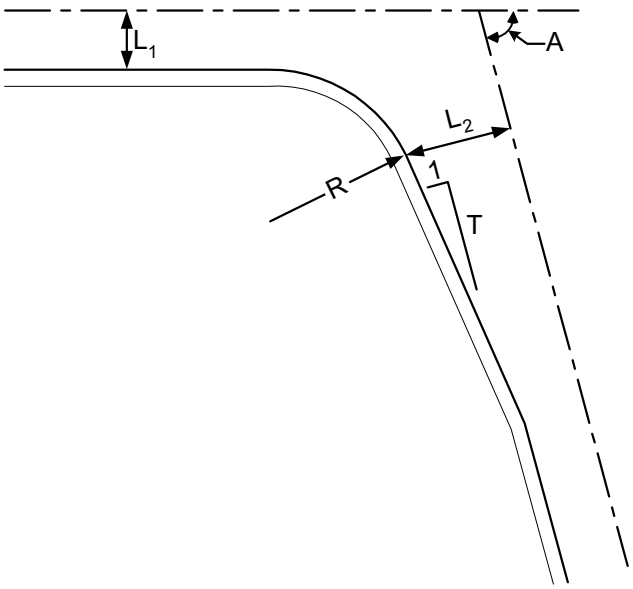

L_1 = Minimum width of the lane that the vehicle is turning from.

L_2 = Minimum width of the roadway that the vehicle is turning into.

R = Radius to the edge of traveled way.

T = Taper rate (length per unit of width of widening)

A = Delta angle of the turning vehicle

Vehicle	A	R	L_1	L_2(1)	T(2)	Vehicle	A	R	L_1	L_2(1)	T(2)
WB-67	60	85	11	22	7	WB-40	60	55	11	15	7.5
	75	75	11	21	8		75	55	11	15	7.5
	90	70	11	21	8		90	55	11	14	7.5
	105	55	11	24	7		105	45	11	16	7.5
	120	50	11	24	7		120	45	11	15	7.5
WB-50	60	55	11	19	6	SU	All	50	11	11	
	75	55	11	18	6	P	All	35	11	11	
	90	55	11	17	6						
	105	50	11	17	6						
	120	45	11	18	6						

(1) At signalized intersections, include all lanes of the exit leg.

(2) When widening is required to obtain the given values of L_1 or L_2 and no taper rate (T) is given, widen at 25:1.

(3) All distances given in feet and angles in degrees

Right-Turn Corner

Figure 910-8

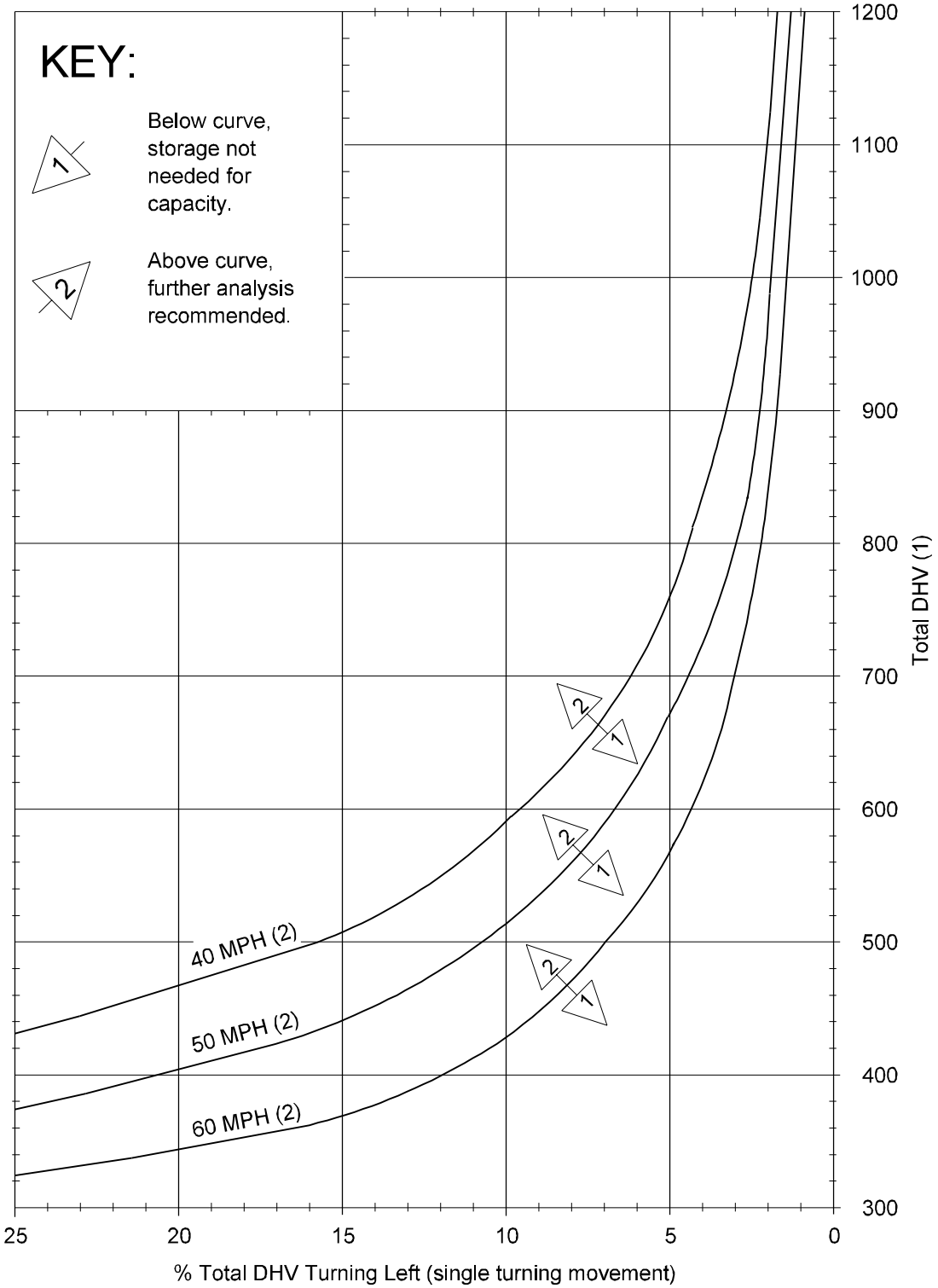

(1) DHV is total volume from both directions.

(2) Speeds are posted speeds.

Left-Turn Storage Guidelines (Two-Lane, Unsignalized)

Figure 910-9a

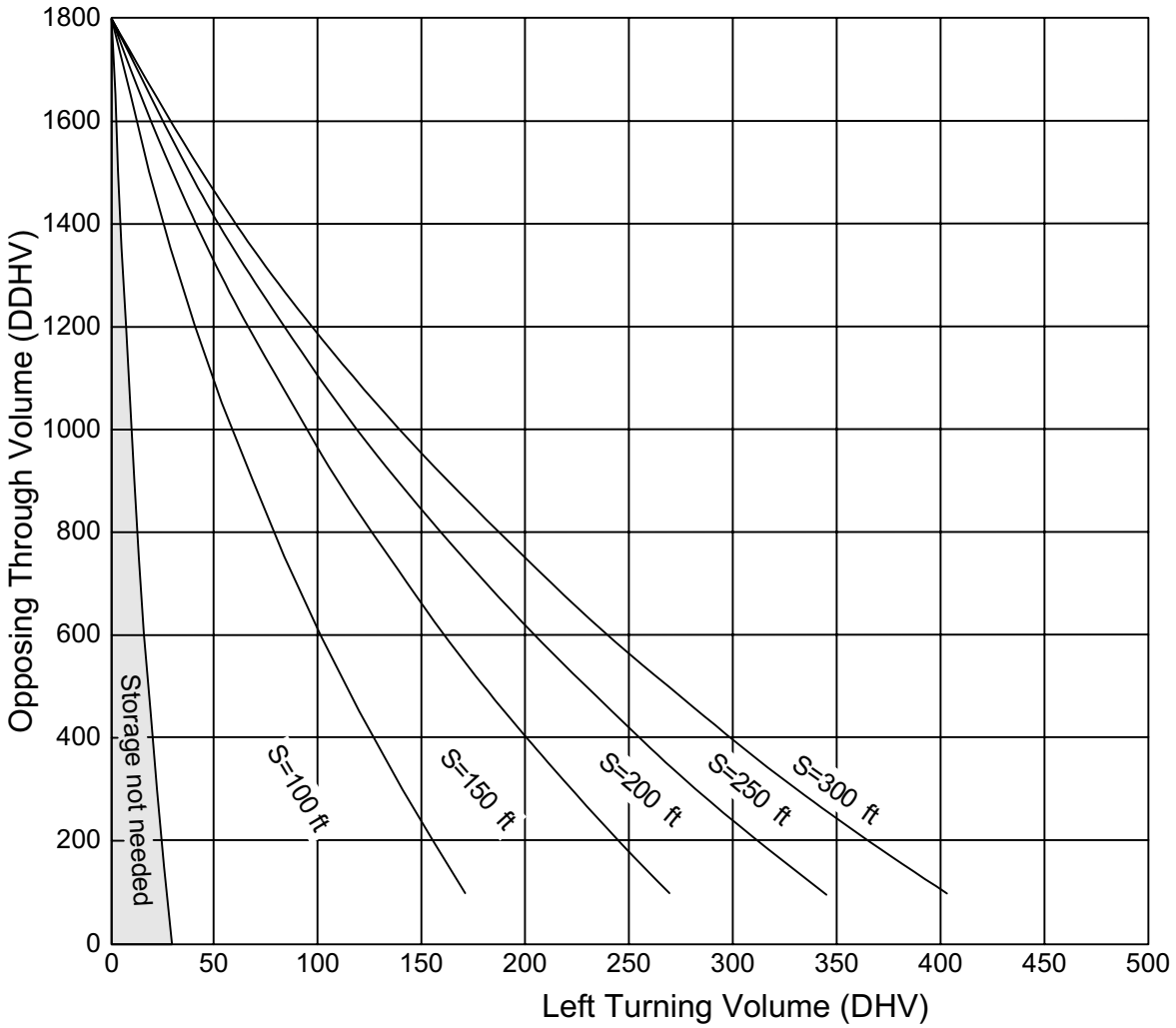

S = Left-Turn storage length

Left-Turn Storage Guidelines (Four-Lane, Unsignalized)
Figure 910-9b

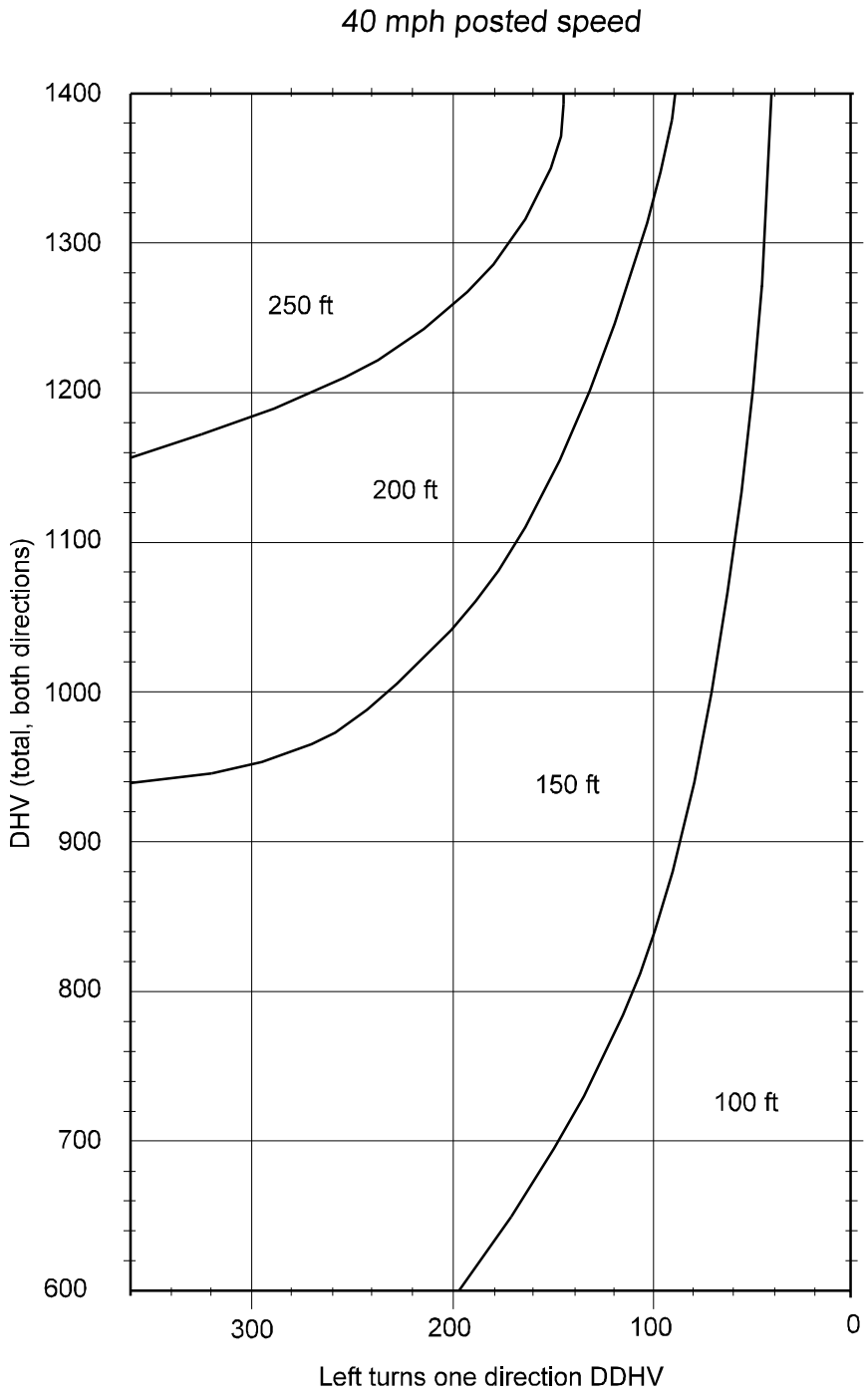

Left-Turn Storage Length (Two-Lane, Unsignalized)
Figure 910-10a

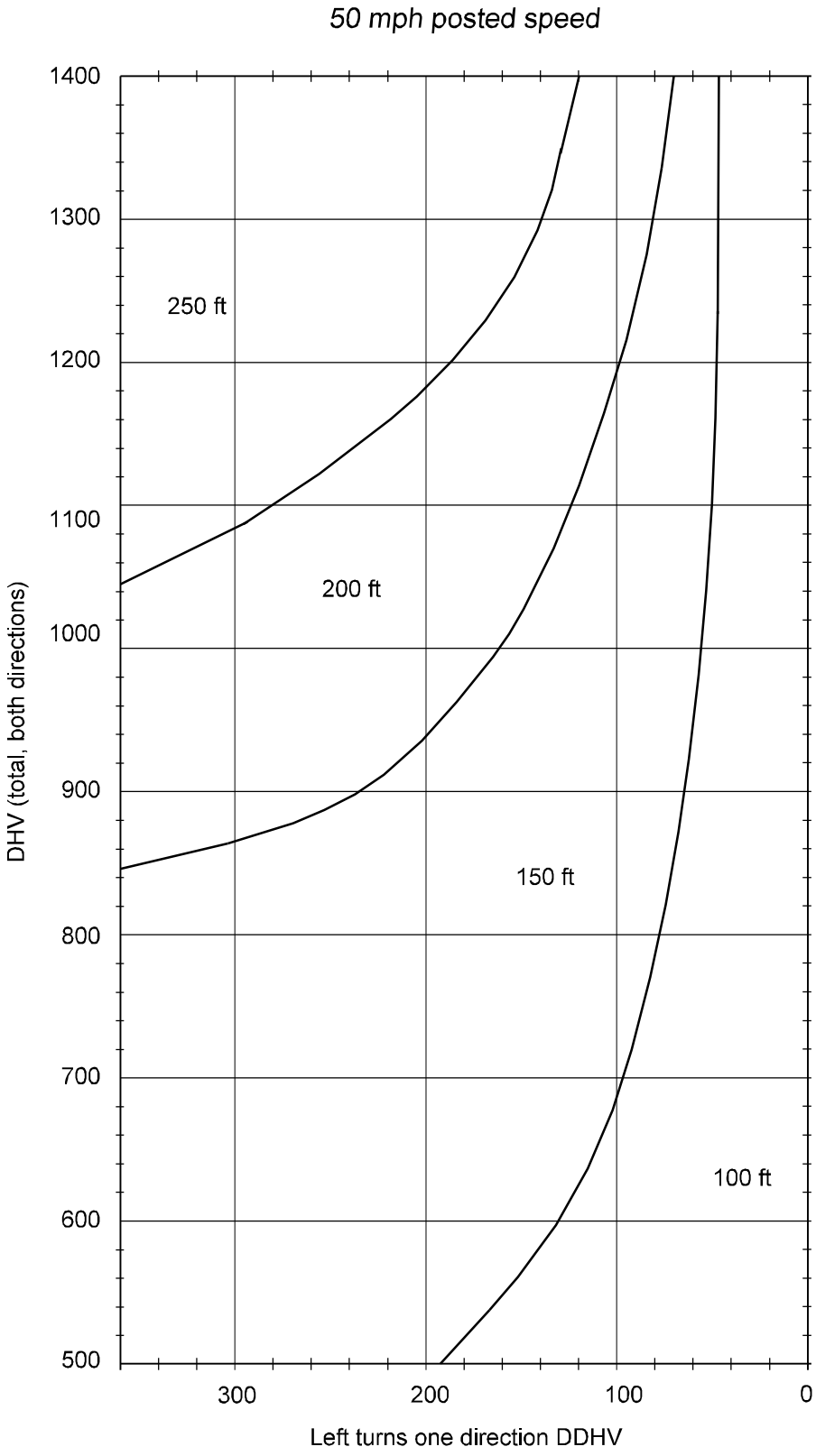

Left-Turn Storage Length (Two-Lane, Unsignalized)

Figure 910-10b

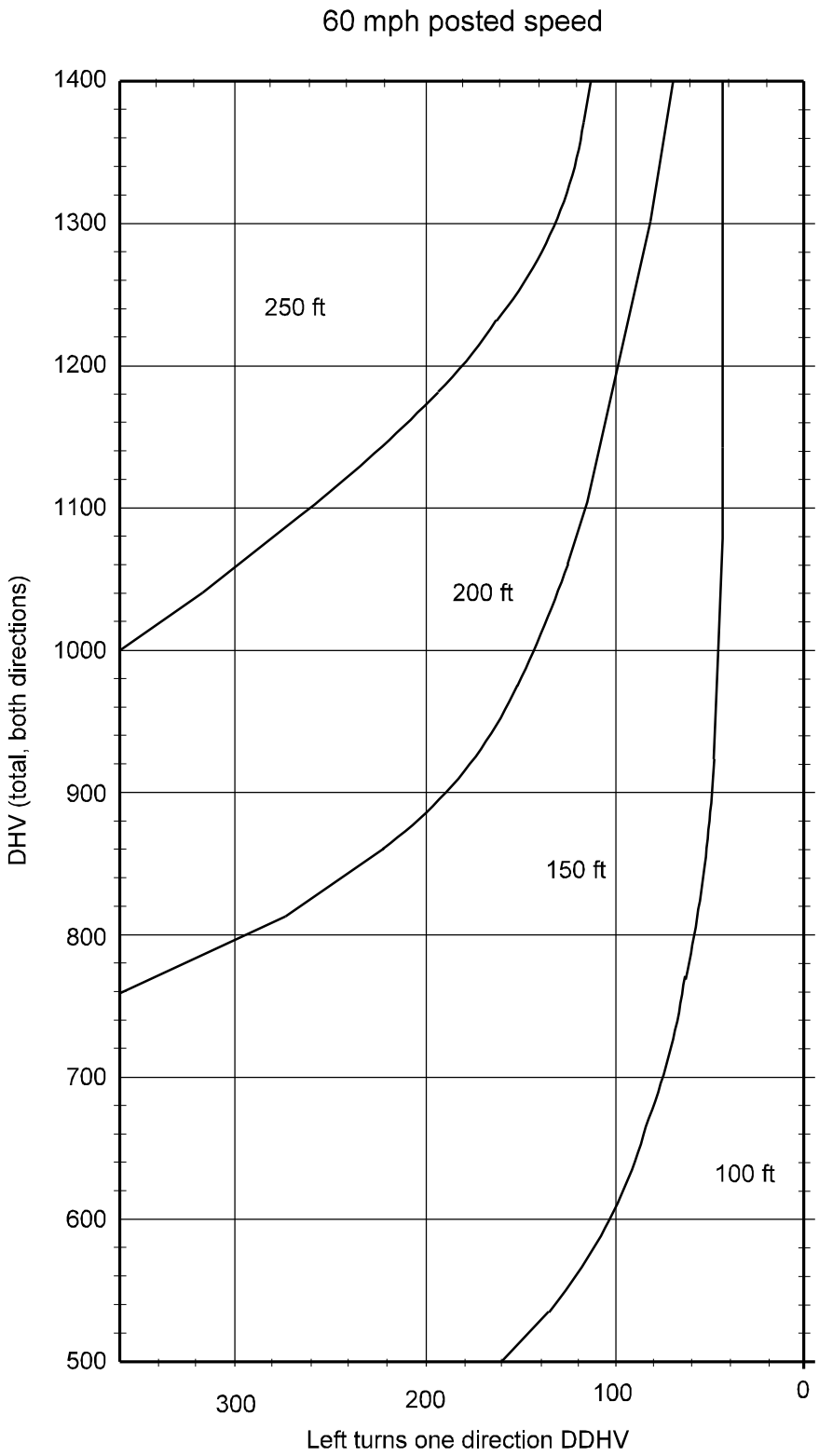

Left-Turn Storage Length (Two-Lane, Unsignalized)

Figure 910-10c

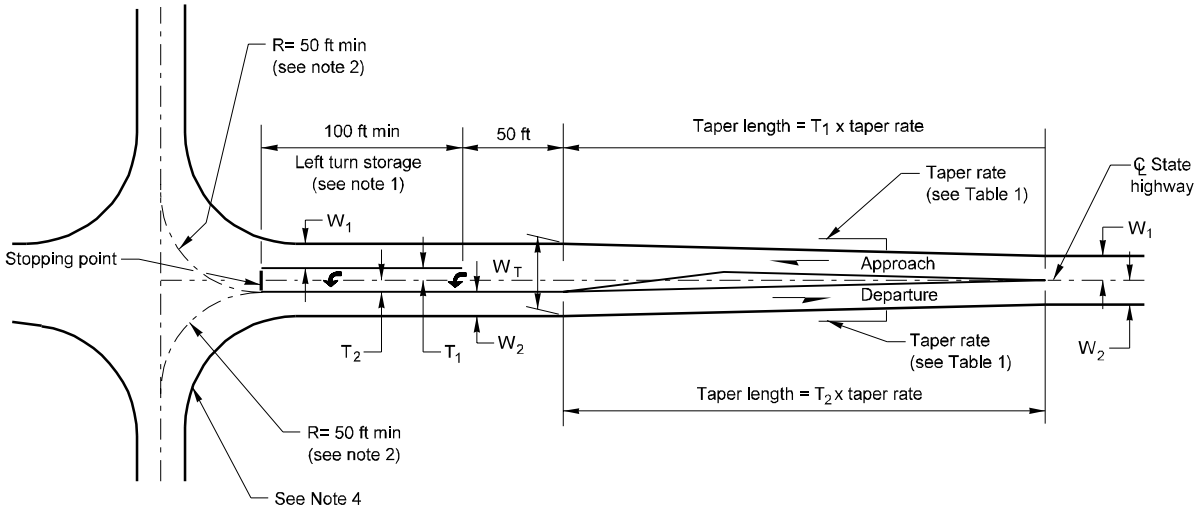

Notes:

(1) The minimum width of the left-turn storage lane (T_1+T_2) is 11 ft. The desirable width is 12 ft. For left-turn storage length, see Figures 910-9b for 4-lane roadways or 10a through 10c for 2-lane roadways.

(2) Use templates for WB-67 design vehicles.

(3) See Standard Plans and MUTCD for pavement marking details.

(4) See Figure 910-8 for right-turn corner design.

W_1 = Approaching through lane.

W_2 = Departing lane.

T_1 = Width of left-turn lane on approach side of center line.

T_2 = Width of left-turn lane on departure side of center line.

W_T = Total width of channelization (W_1+W_2+T_1+T_2)

Posted Speed	Acceleration Taper Rate
55 mph	55:1
50 mph	50:1
45 mph	45:1
40 mph	40:1
35 mph	35:1
30 mph	30:1
25 mph	25:1

Table 1

Median **Channelization (Widening)**
Figure 910-11a

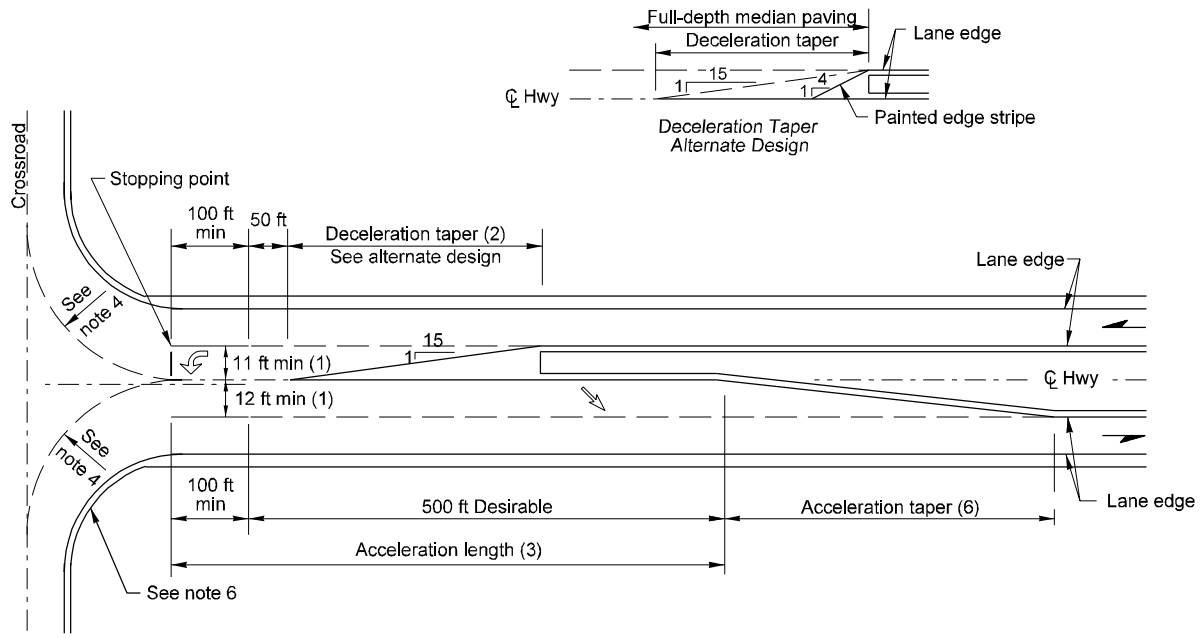

Notes:

(1) Lane widths of 13 ft are desirable for both the left-turn storage lane and the median acceleration lane.

(2) For increased storage capacity, consider the left-turn deceleration taper alternate design.

(3) The minimum total length of the median acceleration lane is shown in Figure 910-15.

(4) R = 50 ft min; use templates for WB-67 design vehicles.

(5) See Figure 910-8 for right-turn corner design.

(6) See Table 2 for acceleration tape rate.

(7) See Standard Plans and MUTCD for pavement marking details.

Posted Speed	Acceleration Taper Rate
55 mph	55:1
50 mph	50:1
45 mph	45:1
40 mph	27:1
35 mph	21:1
30 mph	15:1
25 mph	11:1

Table 2

Median Channelization — Median Width 23 ft to 26 ft
Figure 910-11b

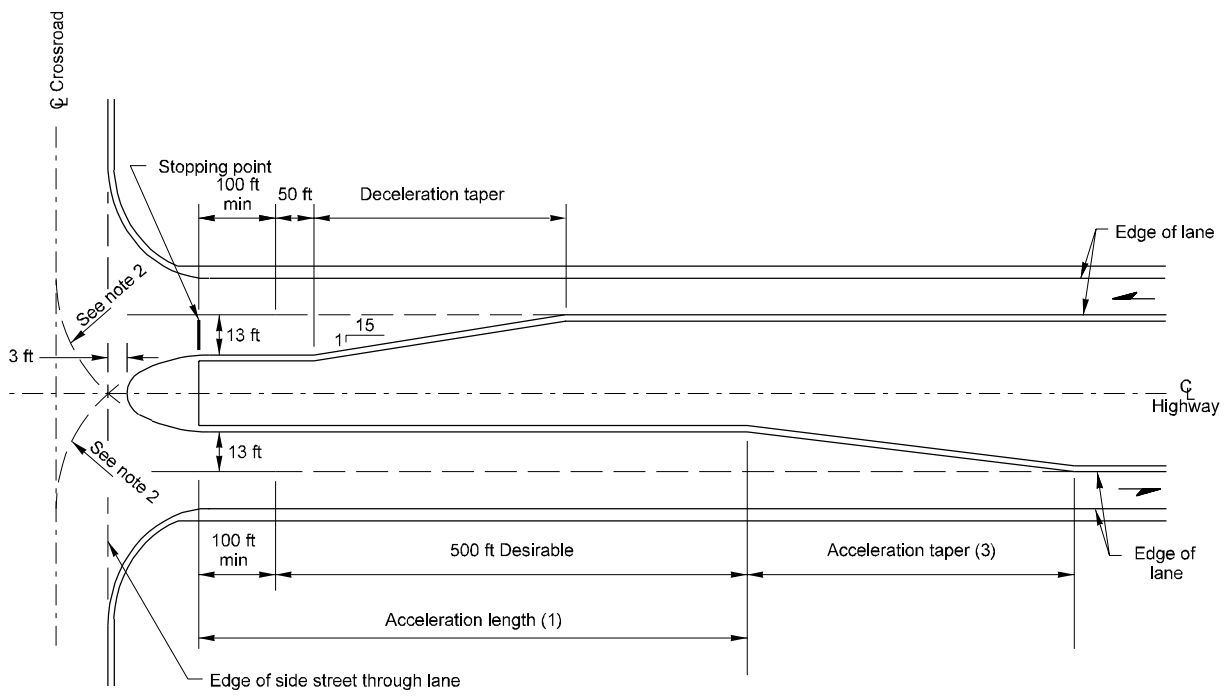

Notes:

(1) The minimum length of the median acceleration lane is shown in Figure 910-15.

(2) R = 50 ft min. Use templates for WB-67 design vehicles.

(3) See Table 2 Figure 910-11b for acceleration tape rate.

(4) See Figure 910-8 for right-turn corner design.

(5) See Standard Plans and MUTCD for pavement marking details.

Median Channelization — Median Width of More Than 26 ft

Figure 910-11c

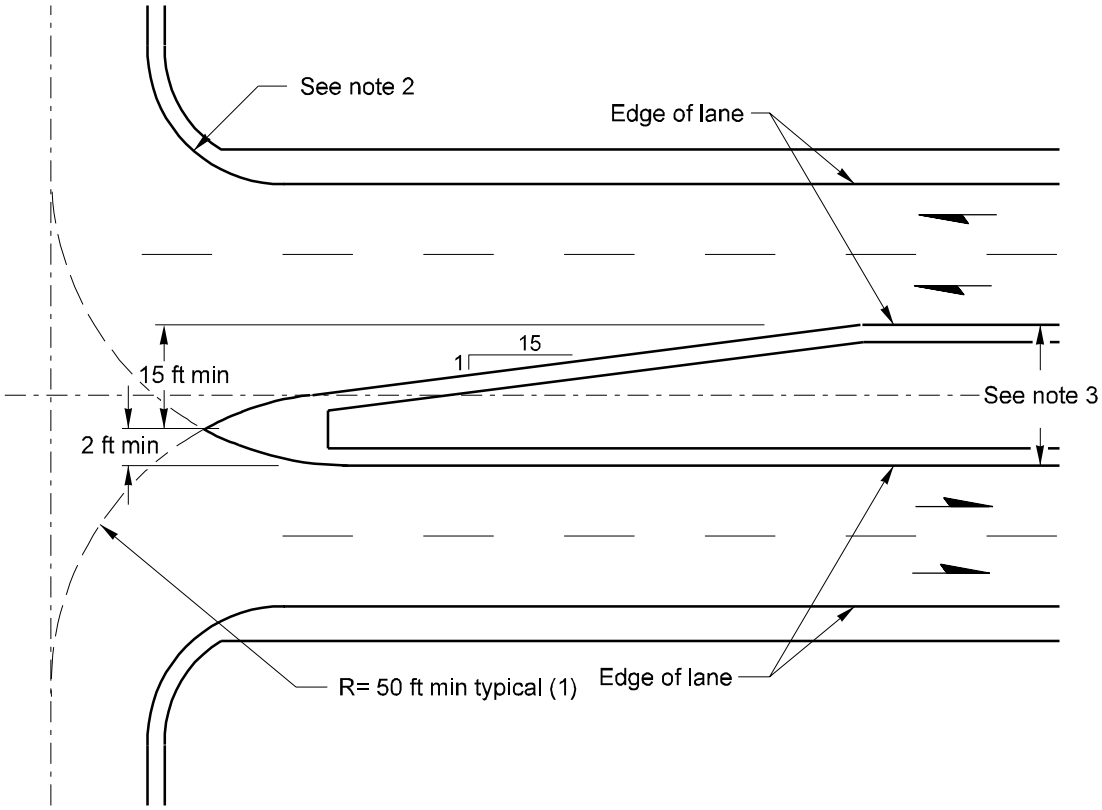

Notes:

(1) Use templates for WB-67 design vehicle.

(2) See Figure 910-8 for right-turn corner design.

(3) For median width 17 ft or more. For median width less than 17 ft, widen to 17 ft or use Figure 910-11b without median acceleration lane.

(4) See Standard Plans and MUTCD for pavement marking details.

Median Channelization (Minor Intersection)

Figure 910-11d

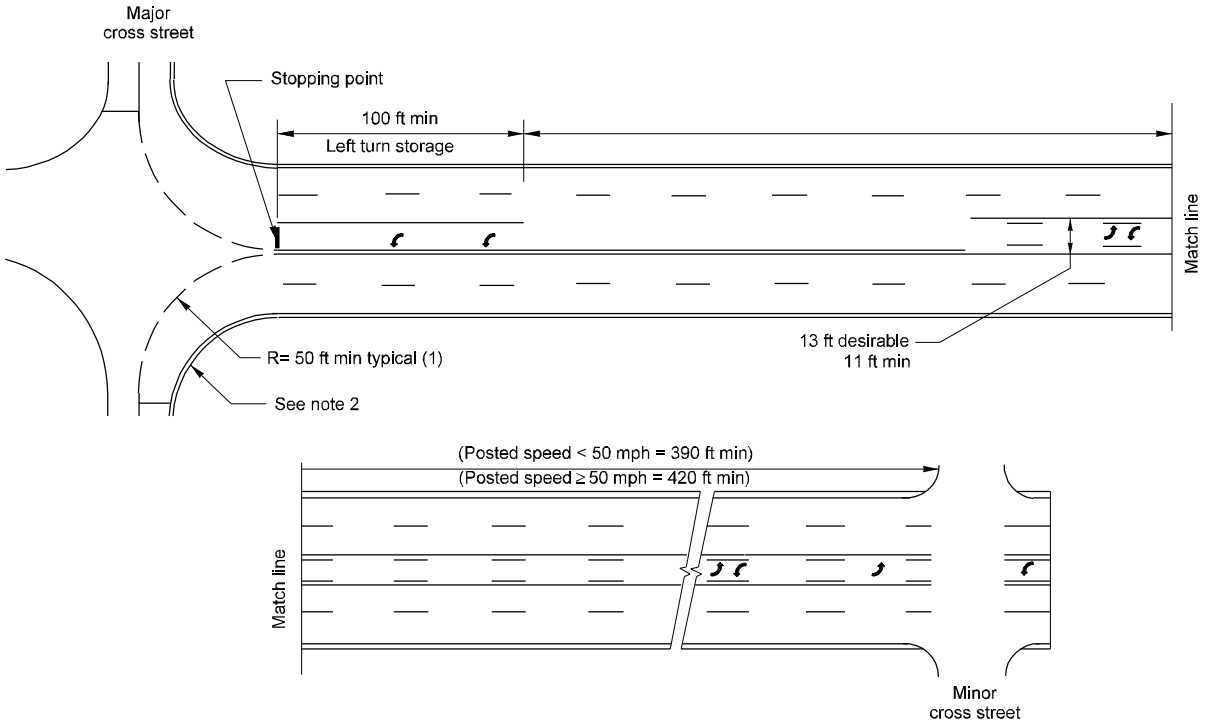

Notes:

(1) Use templates for WB-67 design vehicle.

(2) See Figure 910-8 for right-turn corner design.

(3) See the Standard Plans and the MUTCD for pavement marking details and signing criteria.

Median Channelization (Two-Way Left-Turn Lane)
Figure 910-11e

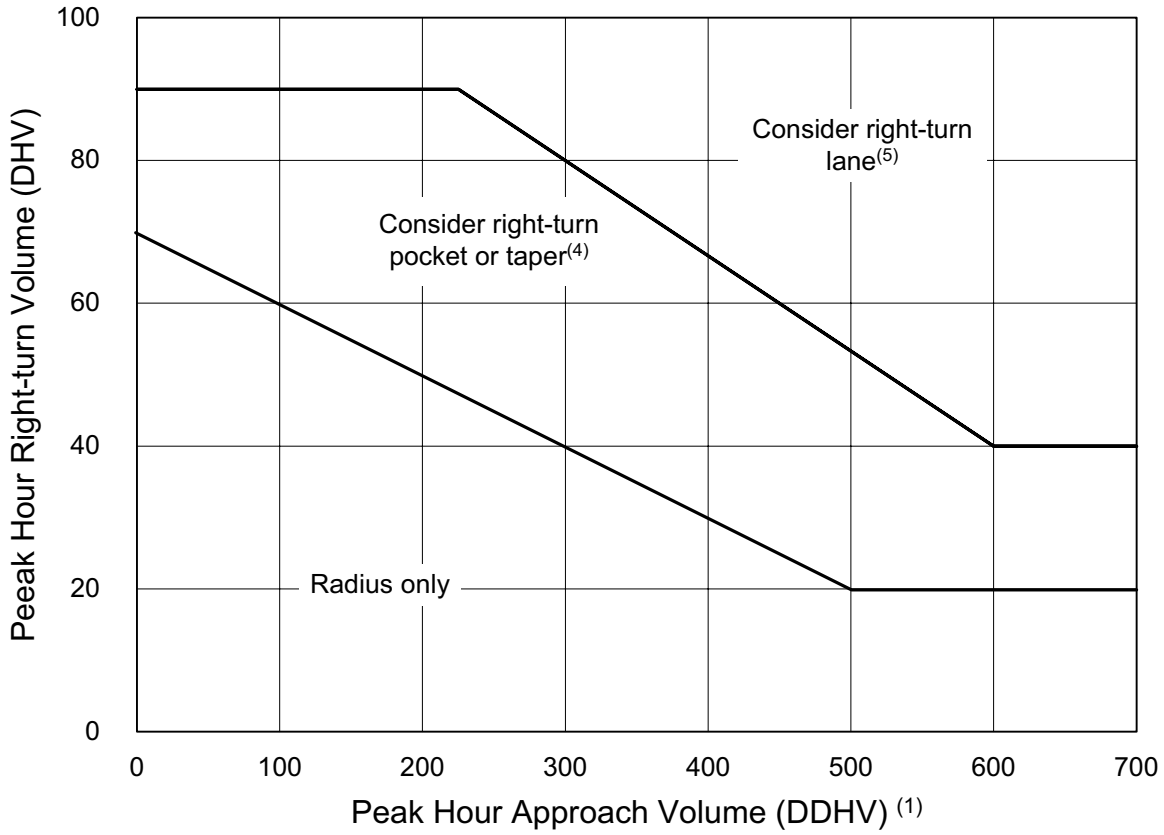

(1) For two-lane highways, use the peak hour DDHV (through + right-turn).

For multilane, high speed highways (posted speed 45 mph or above), use the right-lane peak hour approach volume (through + right-turn).

For multilane, low speed highways (posted speed less than 45 mph), there is no traffic volume right-turn lane or taper requirement.

(2) When all three of the following conditions are met, reduce the right-turn DDHV by 20.

- The posted speed is 45 mph or less
- The right-turn volume is greater than 40 VPH.
- The peak hour approach volume (DDHV) is less than 300 VPH.

(3) See Figure 910-8 for right-turn corner design.

(4) See Figure 910-13 for right-turn pocket or taper design.

(5) See Figure 910-14 for right-turn lane design.

(6) For additional guidance, see 910.07(2) in the text.

Right-Turn Lane Guidelines(6)
Figure 910-12

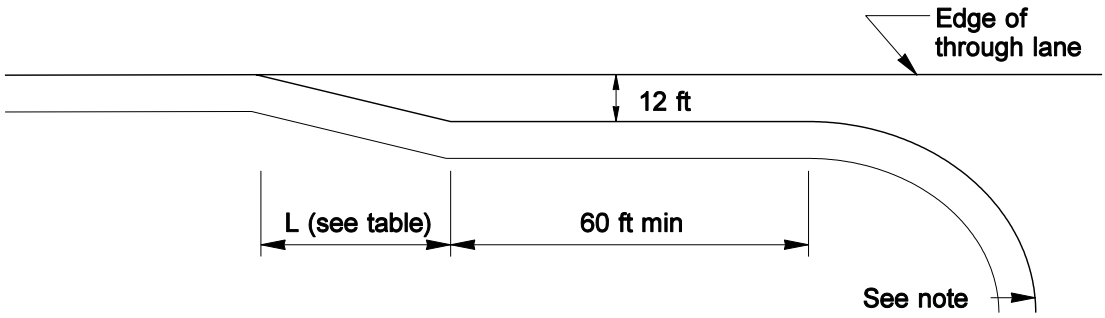

Right-Turn Pocket

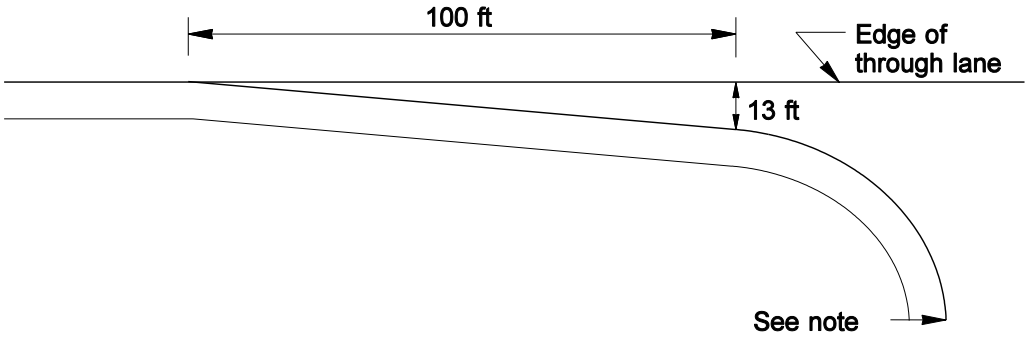

Right-Turn Taper

Posted speed limit	L
Below 40 mph	40 ft
40 mph or above	100 ft

Note: See Figure 910-8 for right-turn corner design.

Right-Turn Pocket and Right-Turn Taper
Figure 910-13

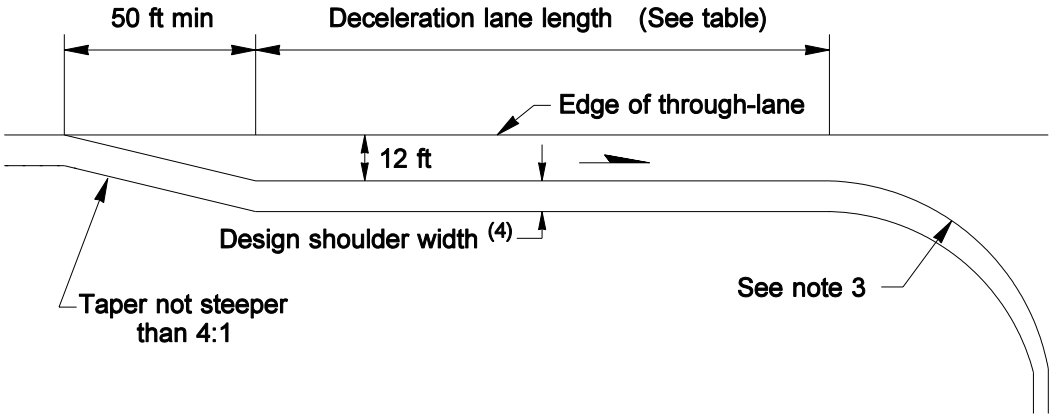

Highway Design Speed (mph)	Turning Roadway design speed (mph)		
	Stop(1)	15	20
30	235	185(2)	160(2)
40	335	305	275
50	425	390	365
60	530	490	470
70	605	580	565

Minimum Deceleration Lane Length (ft)

Grade	Upgrade	Downgrade
3% to less than 5%	0.9	1.2
5% or more	0.8	1.35

Adjustment Multiplier for Grades 3% or Greater

Notes:

(1) For use when the turning traffic is likely to stop before completing the turn. (For example, where pedestrians are present.)

(2) When adjusting for grade, do not reduce the deceleration lane to less than 150 ft.

(3) See Figure 910-8 for right-turn corner design.

(4) May be reduced to 4 ft, see 910.07 (2) in the text.

Right-Turn Lane
Figure 910-14

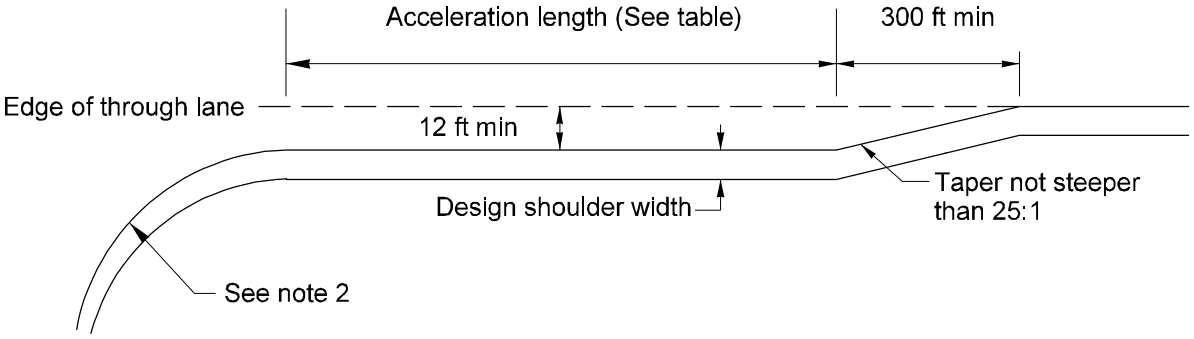

Highway Design Speed (mph)	Turning Roadway Design Speed (mph)		
	Stop	15	20
30	180		
40	395	320	270
50	640	560	510
60	1115	1015	955
70	1495	1415	1350

Minimum Acceleration Lane Length (ft)

Highway Design Speed (mph)	% Grade	Upgrade	Downgrade
40	3% to less than 5%	1.3	0.7
50		1.3	0.65
60		1.4	0.6
70		1.5	0.6
40	5% or more	1.5	0.6
50		1.5	0.55
60		1.7	0.5
70		2.0	0.5

Adjustment Multiplier for Grades 3% or Greater

Notes:

(1) The minimum acceleration lane length for freeways and expressways is 900 ft.

(2) See Figure 910-8 for right-turn corner design.

Acceleration Lane
Figure 910-15

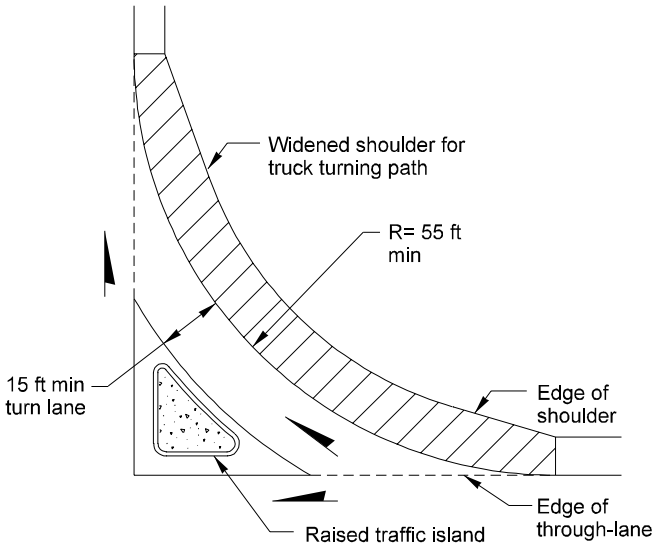

Small Island Design

Notes:

(1) Widen shoulders when adequate right-turn radii or roadway width cannot be provided for large trucks. Design widened shoulder pavement the same depth as the right-turn lane.

(2) Use the truck turning path templates for the design vehicle and a minimum of 2 ft clearance between the wheel paths and the face of a curb or edge of shoulder to determine the width of the widened shoulder.

(3) See Chapter 640 for turning roadway widths.

(4) See Figure 910-16c for additional details on island placement

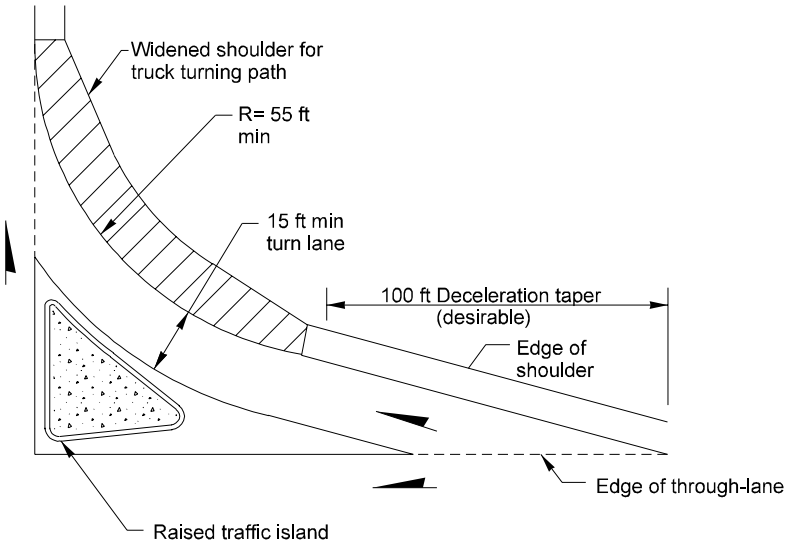

Large Island Design

Traffic Island Designs

Figure 910-16a

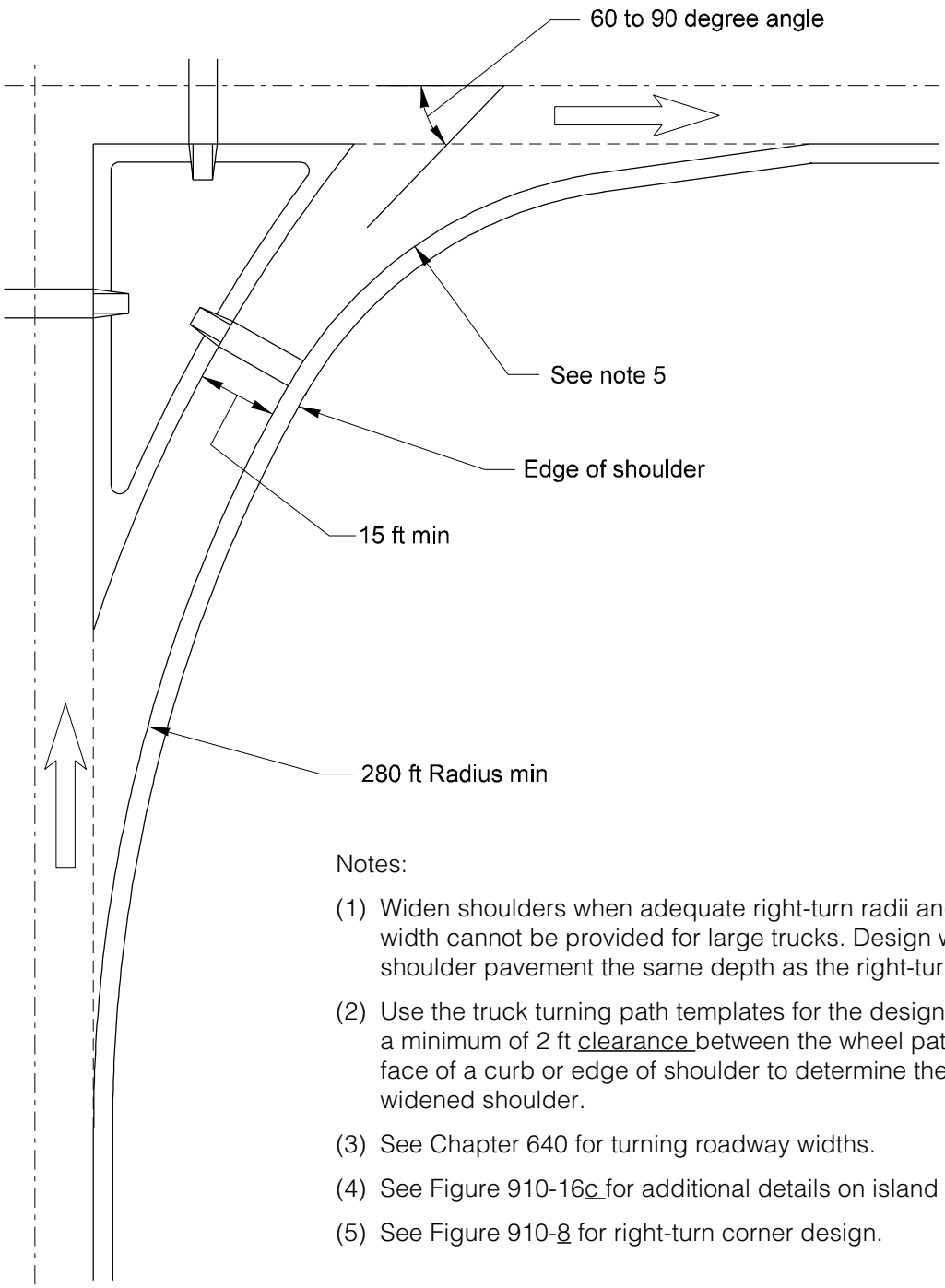

Notes:

(1) Widen shoulders when adequate right-turn radii and roadway width cannot be provided for large trucks. Design widened shoulder pavement the same depth as the right-turn lane.

(2) Use the truck turning path templates for the design vehicle and a minimum of 2 ft clearance between the wheel paths and the face of a curb or edge of shoulder to determine the width of the widened shoulder.

(3) See Chapter 640 for turning roadway widths.

(4) See Figure 910-16c for additional details on island placement

(5) See Figure 910-8 for right-turn corner design.

Traffic Island Designs (Compound Curve)
Figure 910-16b

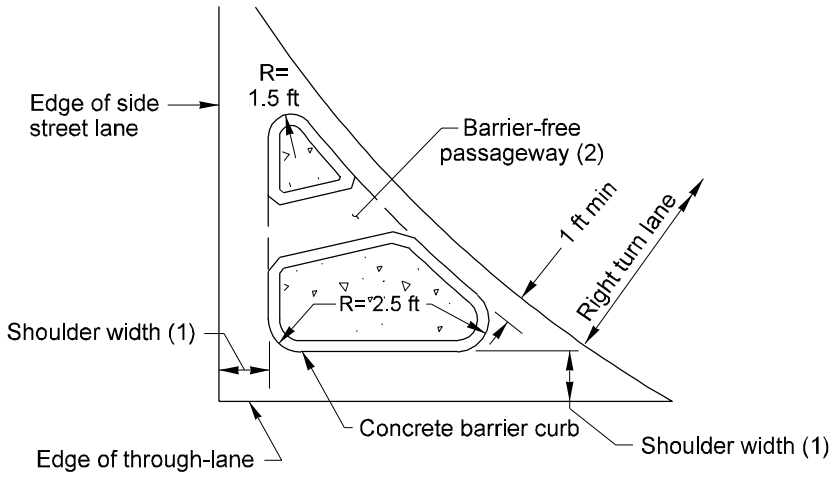

Small Raised Traffic Island

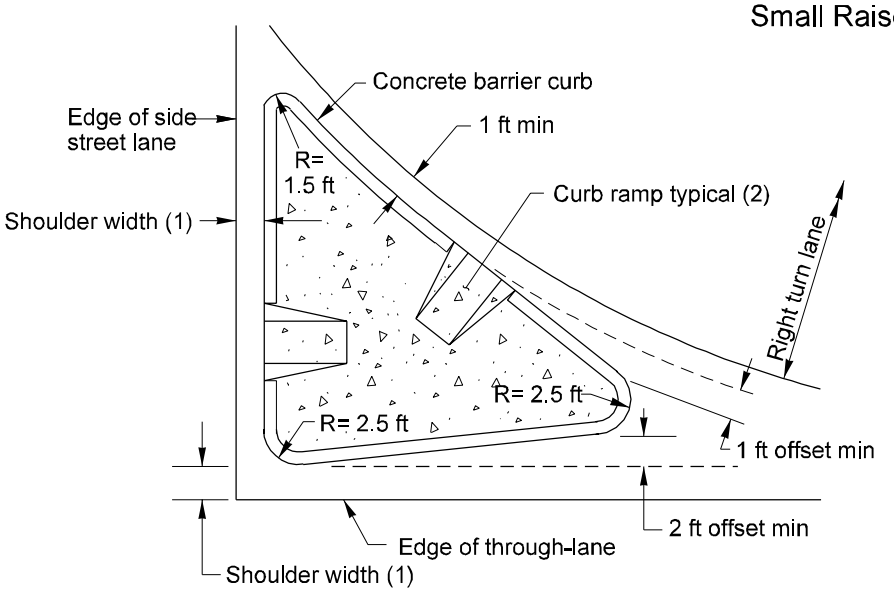

Large Raised Traffic Island

Notes:

(1) See Chapter 440 for minimum shoulder width. See the text for additional information on shoulders at islands.

(2) Provide barrier-free passageways or curb ramps when required, see Chapter 1025.

Traffic Island Designs
Figure 910-16c

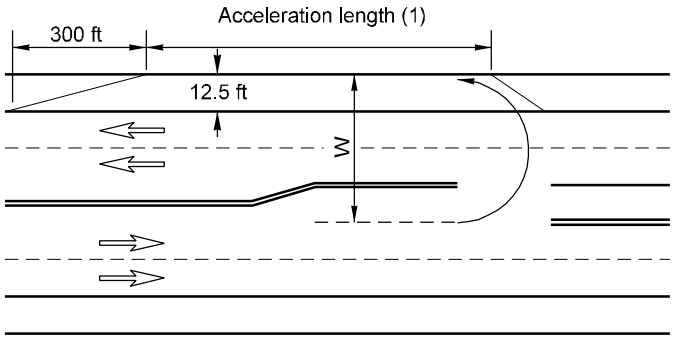

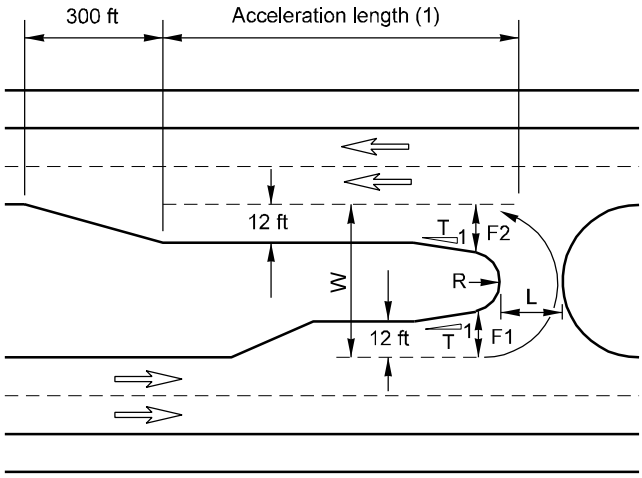

Vehicle	W	R	L	F1	F2	T
P	52	14	14	12	12	—
SU	87	30	20	13	15	10:1
BUS	87	28	23	14	18	10:1
WB-40	84	25	27	15	20	6:1
WB-50	94	26	31	16	25	6:1
WB-67	94	22	49	15	35	6:1
MH	84	27	20	15	16	10:1
P/T	52	11	13	12	18	6:1
MH/B	103	36	22	15	16	10:1

U-Turn Design Dimensions (ft)

Notes:

(1) The minimum length of the median acceleration lane is shown in Figure 910-15.

(2) All dimensions in feet.

(3) When U-turn uses the shoulder, provide 12.5 ft shoulder width and shoulder pavement designed to the same depth as the through lanes for the acceleration length and taper.

U-Turn Locations
Figure 910-17

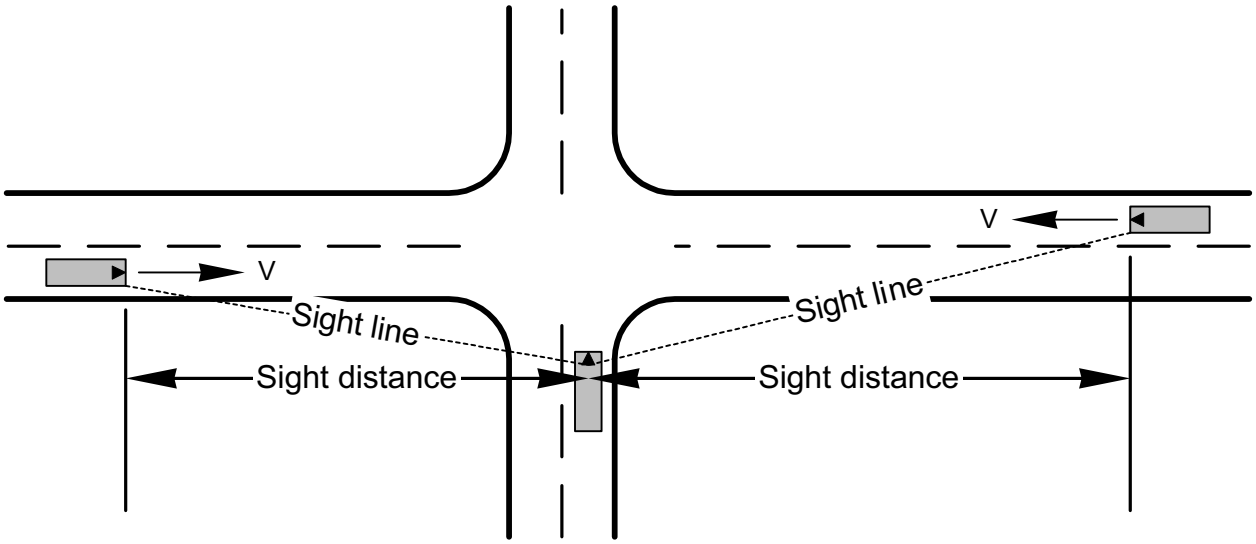

$SD = 1.47Vt_g$
Where: SD = Sight Distance (ft) V = Design speed of the through roadway (mph) t_g = Time gap for the minor roadway traffic to enter or cross the through roadway (s)

Intersection Sight Distance Equation
Table 1

Design Vehicle	Time Gap (t_g) in seconds
Passenger car (P)	9.5
Single unit trucks and buses (SU & BUS)	11.5
Combination trucks (WB-40, WB-50, & WB-67)	13.5

Note: Values are for a stopped vehicle to turn left or right onto a two-lane two-way roadway with no median and grades 3% or less. Includes 2 sec for perception/reaction time.

Intersection Sight Distance
Gap Times (t_g)
Table 2

The t_g values listed in Table 2 require the following adjustments:

Crossing maneuvers:

All vehicles	subtract 1.0 s

Multilane roadways:

Left-turns, for each lane in excess of one to be crossed and for medians wider than 4 ft:

Passenger cars	add 0.5 s
All trucks and buses	add 0.7 s

Crossing maneuvers, for each lane in excess of two to be crossed and for medians wider than 4 ft:

Passenger cars	add 0.5 s
All trucks and buses	add 0.7 s

Note: Where medians are wide enough to store the design vehicle, determine the sight distance as two maneuvers.

Crossroad grade greater than 3%:

All movements upgrade, for each percent that exceeds 3%:

All vehicles	add 0.2 s

Sight Distance for Grade Intersection With Stop Control
Figure 910-18a

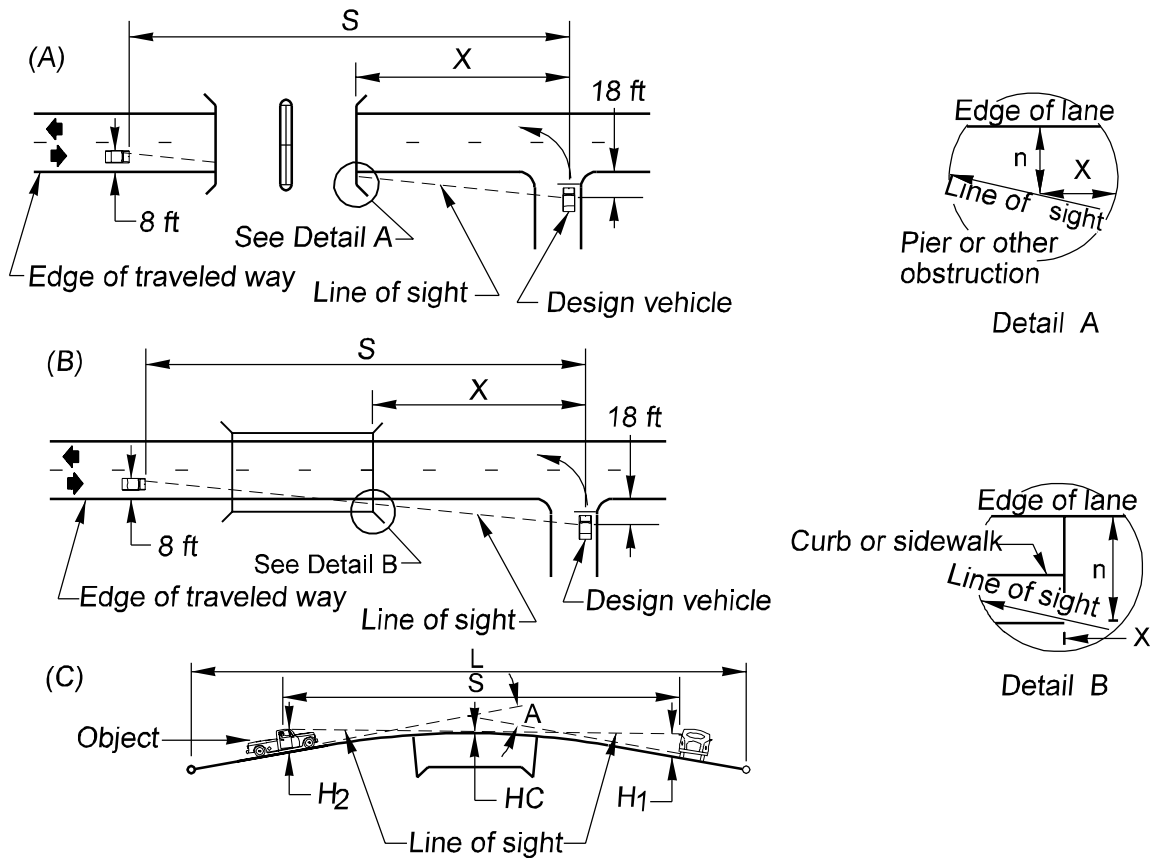

For bridge pier or bridge rail:

$$S = \frac{26(x)}{18 - n}$$

Where:

S = Available sight distance (ft)

n = Offset from sight obstruction to edge of lane (ft)

X = Distance from center line of lane to sight obstruction (ft)

For crest vertical curve over a curb where S<L:

$$S = \sqrt{\frac{100L\left[\sqrt{2(H_1 - HC)} + \sqrt{2(H_2 - HC)}\right]^2}{A}}$$

$$L = \frac{AS^2}{100\left[\sqrt{2(H_1 - HC)} + \sqrt{2(H_2 - HC)}\right]^2}$$

Where:

S = Available sight distance (ft)

H_1 = Eye height (3.5 ft)

H_2 = Object height (4.25 ft)

HC = Curb height (ft)

L = Vertical curve length (ft)

A = Algebraic difference in grades (%)

Sight Distance at Intersections

Figure 910-18b

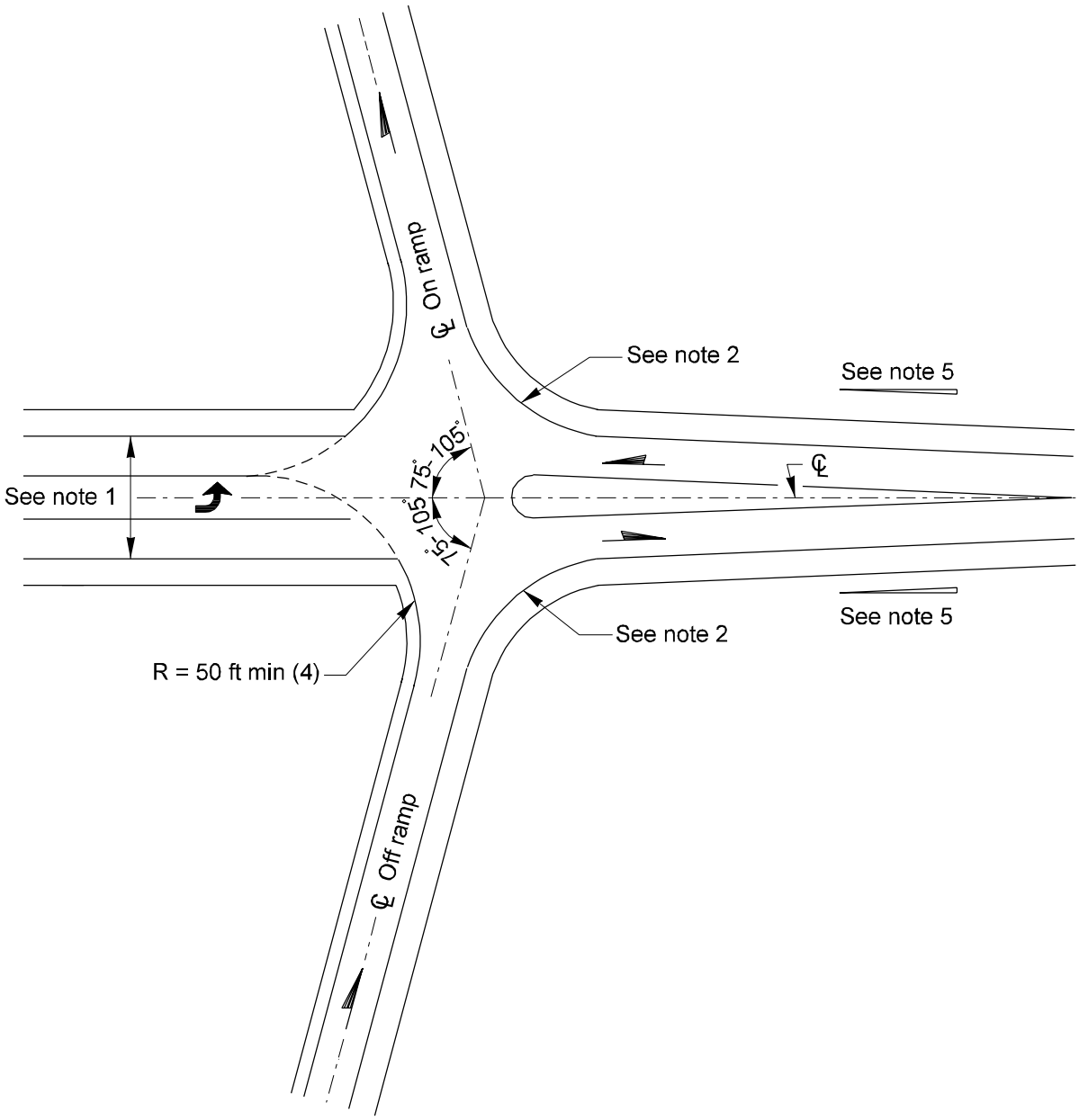

Notes:

(1) 12 ft through-lanes and 13 ft left-turn lane desirable.

(2) For right-turn corner design see Figure 910-8.

(3) Intersections may be designed individually.

(4) Use templates for the WB-67 design vehicle.

(5) See Figure 910-11a, Table 1 for taper rates.

Interchange Ramp Details

Figure 910-19

915 Roundabouts

915.01 General
915.02 References
915.03 Definitions
915.04 Roundabout Categories
915.05 Capacity Analysis
915.06 Geometric Design
915.07 Pedestrians
915.08 Bicycles
915.09 Signing and Pavement Markings
915.10 Illumination
915.11 Access, Parking, and Transit Facilities
915.12 Procedures
915.13 Documentation

915.1 General

Modern roundabouts are circular intersections at grade. They can be an effective intersection type with fewer conflict points, lower speeds, and easier decision making than conventional intersections. They require less maintenance than traffic signals. When well designed, they have been found to reduce fatal and severe injury accidents, traffic delays, fuel consumption, and air pollution. They also can have a traffic calming effect. For additional information and details on roundabouts, see *Roundabouts: An Informational Guide*.

Selection of a roundabout as the preferred intersection type is based on several factors including traffic volume, pedestrian and bicycle volume, space requirements, right of way availability, and traffic speeds. The safety benefits of a roundabout decrease with higher traffic volumes, particularly when pedestrians and bicycles are considered. Select a roundabout only when it is clearly the best intersection type.

Modern roundabouts differ from the old rotaries and traffic circles in three important respects: they have a smaller diameter that constrains circulating speeds; they have raised splitter islands that provide entry deflection, slowing down the entering vehicles; and they have yield at entry, which requires entering vehicles to yield, thus allowing circulating traffic free flow.

Old rotaries and traffic circles are characterized by a large diameter, often in excess of 300 ft. This large diameter typically results in travel speeds within the circulating roadway that exceed 30 mph. They typically provide little or no horizontal deflection of the paths of through traffic. These large diameters also create weaving areas that increase accidents in the circulating roadway. At times, traffic control was imposed on the circulating traffic, such as yield or stop signs that required circulating traffic to yield to entering traffic. In some cases, each entry was controlled with a traffic signal. Circular intersections with any of these features are not an approved intersection type.

(1) Locations Recommended for Roundabouts

Consider roundabouts at intersections:

- Where stop signs result in unacceptable delays for the crossroad traffic.
- With a high left-turn percentage on one or more legs.
- Where a disproportionately high number of accidents involve crossing or turning traffic.
- Where the major traffic movement makes a turn, for example where a state route or city arterial makes a turn.
- Where traffic growth is expected to be high and future traffic patterns are uncertain.
- Where it is not desirable to give priority to either roadway.
- Where major roads intersect at a wye (Y) or tee (T) intersection or with unusual geometry.

(2) Locations Not Normally Recommended for Roundabouts

Roundabouts are not normally recommended, but they may be considered at intersections:

- On a facility with a functional class of collector or above where any leg has a posted speed of 45 mph or higher.

- Where the grade for any leg exceeds 4%.
- Where traffic flows are unbalanced with higher volumes on one or more approaches.
- Where a major road intersects a minor road and a roundabout would result in unacceptable delays to the major road traffic.
- Where there is considerable pedestrian activity and, due to high traffic volumes, it would be difficult for pedestrians to cross either road. This includes special-need pedestrians such as large numbers of children or the elderly.
- Where there is inadequate sight distance.
- Where there is considerable bicycle traffic.
- Where a downstream traffic control device could cause a queue that extends into the roundabout. Examples include traffic signals, signalized pedestrian crossings, railroad crossings, and drawbridges.
- Where a railroad will cross through the roundabout.
- With more than six approach legs.
- Where there is a need for emergency vehicle preemption, such as in the vicinity of a fire station.

(3) Locations Not Recommended for Roundabouts

Roundabouts are not recommended at intersections:

- Where a satisfactory geometric design (deflection, diameter, roadway width, or grade for example) cannot be provided.
- Where peak period reversible lanes are required.
- At a single intersection in a network of linked traffic signals.
- Where a signal interconnect system would provide a better level of service.
- Where it is desirable to be able to modify traffic movements via signal timings.

915.02 References

Americans with Disabilities Act of 1990 (ADA)

Revised Code of Washington (RCW) 47.05.021, Functional classification of highways.

Standard Plans for Road, Bridge, and Municipal Construction (Standard Plans), M 21-01, WSDOT

Standard Specifications for Road, Bridge, and Municipal Construction (Standard Specifications), M 41-10, WSDOT.

Manual on Uniform Traffic Control Devices for Streets and Highways (MUTCD), USDOT, FHWA; including the *Washington State Modifications to the MUTCD*, M 24-01, WSDOT

Local Agency Guidelines (LAG), M 36-63, WSDOT

Roundabouts: An Informational Guide, FHWA-RD-00-067, USDOT, FHWA

A Policy on Geometric Design of Highways and Streets (Green Book), AASHTO

Use of Roundabouts, ITE Technical Council Committee 5B-17 (Feb. 1992)

Highway Capacity Manual (HCM), Special Report 209, Transportation Research Board, National Research Council

NCHRP Synthesis 264, Modern Roundabout Practice in the United States, Transportation Research Board, 1998.

Guide to Traffic Engineering Practice, Part 6-Roundabouts (Austroad Guide), Sydney, Australia: Austroad, 1993.

The Traffic Capacity of Roundabouts, TRRL Laboratory Report 942, Kimber, R.M. Crowthorne, England: Transport and Road Research Laboratory, 1980.

Roundabout Design Guidelines; Ourston & Doctors, Santa Barbara, California (1995)

The Design of Roundabouts. State of the Art Review; Brown, Mike; Transportation Research Laboratory, Department of Transport. London, HMSO, 1995.

Crash Reductions Following Installation of Roundabouts in the United States, Insurance Institute for Highway Safety, March 2000.

ARCADY (Assessment of Roundabout CApacity and DelaY) program, developed by MVA Systematica under contract to Transport Road Research Laboratory (TRRL).

RODEL (ROundabout DELay) program, developed by the Highway Department of Staffordshire County Council in the UK.

aaSIDRA (Signalized Intersection Design and Research Aid) program, developed by The Australian Road Research Board (ARRB).

915.03 Definitions

approach roadway The lane or set of lanes for traffic approaching the roundabout. (See Figure 915-1.)

central island The area of the roundabout surrounded by the circulating roadway.

central island diameter The diameter of the central island. (See Figure 915-1.)

circulating lane A lane circulating in the roundabout.

circulating roadway width The width of the area within the inscribed circle for vehicular movement measured from inscribed circle to the central island. (See Figure 915-1.)

conflict An event involving two or more road users in which the action of one user causes the other user to make an evasive maneuver to avoid a collision.

curb bulb A bulge in a curb line that reduces the width of the roadway.

deflection The change in the path of a vehicle imposed by geometric features of a roundabout resulting in a slowing of vehicles. (See Figures 915-8a and 8b.)

departure roadway The lane or set of lanes for traffic leaving the roundabout. (See Figure 915-1.)

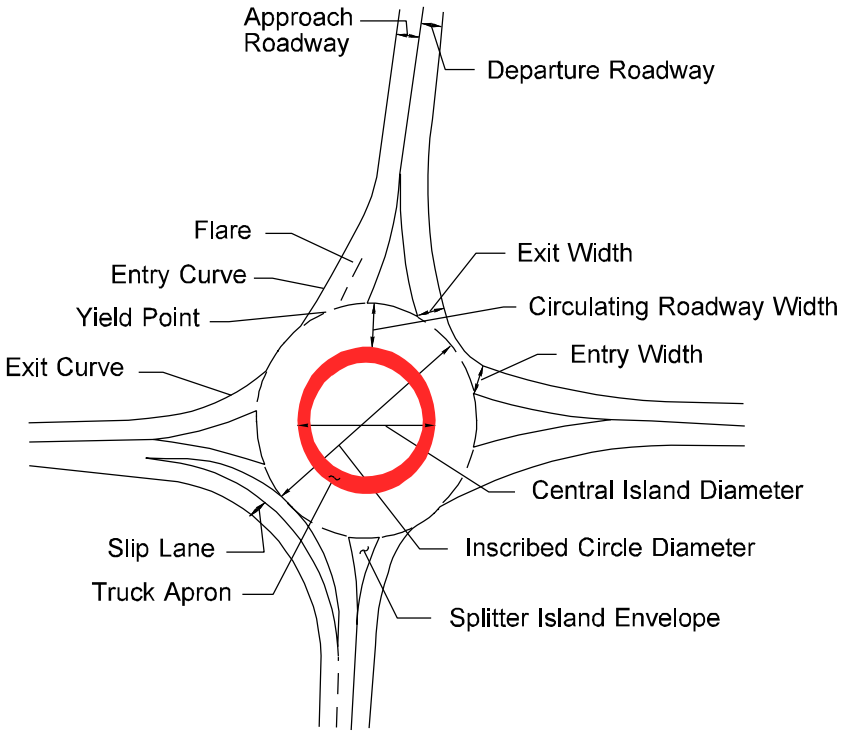

Roundabout Elements
Figure 915-1

design speed The speed used to determine the various geometric design features of the roadway.

design vehicle A vehicle, the dimensions and operating characteristics of which are used to establish the layout geometry.

detectable warning surface A feature of a walking surface to warn visually impaired pedestrians of a hazard. Truncated domes are specified by The Access Board's ADA Accessibility Guidelines.

double-lane roundabout A roundabout with the circulating roadway and one or more entry or exit legs designed as two lanes.

entry angle The angle between the entry roadway and the circulating roadway measured at the yield point. (Figure 915-2)

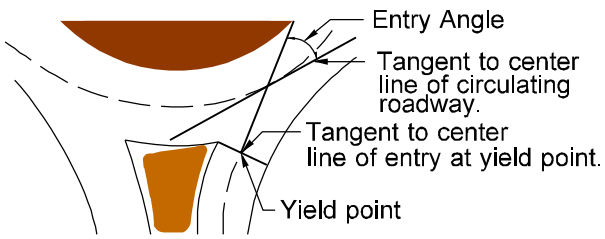

Entry Angle
Figure 915-2

entry curve The curve of the right curb that leads vehicles into the circulating roadway. (See Figure 915-1.)

entry width The width of an entrance leg at the inscribed circle. (See Figure 915-1.)

exit curve The curve of the right curb that leads vehicles out of the circulating roadway. (See Figure 915-1.)

exit width The width of an exit leg at the inscribed circle. (See Figure 915-1.)

flare The widening of the approach to the roundabout to increase capacity. (See Figure 915-1.)

functional classification The grouping of streets and highways according to the character of the service they are intended to provide as provided in RCW 47.05.021.

inscribed circle The entire area within a roundabout between all of the approaches and exits. The inscribed circle is not always circular; ovals and tear drops have been used.

inscribed circle diameter The diameter of the inscribed circle. (See Figure 915-1.)

intersection angle The angle between any two intersection legs at the point that the center lines intersect.

intersection at grade The general area where a roadway or ramp terminal is met or crossed at a common grade or elevation by another roadway

intersection leg Any one of the roadways radiating from and forming part of an intersection.

intersection sight distance The distance that the driver of a vehicle on the crossroad can see along the main roadway, as compared to the distance required for safe operation.

intersection turning radii The geometric design of the intersection to allow the design vehicle for each turning movement to complete the turn without encroachment.

island A defined area within an intersection, between traffic lanes, for the separation of vehicle movements or for pedestrian refuge.

lane A strip of roadway used by a single line of vehicles.

lane width The lateral design width for a single lane, striped as shown in the Standard Plans and the Standard Specifications. The width of an existing lane is measured from the edge of traveled way to the center of the lane line or between the centers of successive lane lines.

roadway The portion of a state highway; a federal, county, or private road; or a city street, including shoulders, for vehicular use. A divided highway has two or more roadways.

roundabout A circular intersection with yield control of all entering traffic, channelized approaches with raised splitter islands, counter-clockwise circulation, and appropriate geometric curvature to ensure that travel speeds on the circulating roadway are typically less than 30 mph.

sight distance The length of roadway visible to the driver.

single-lane roundabout A roundabout with the circulating roadway and all entry and exit legs designed as one lane.

shoulder The portion of the roadway contiguous with the traveled way, primarily for accommodation of stopped vehicles, emergency use, lateral support of the traveled way, and use by pedestrians and bicycles.

slip lane A lane that separates heavy right turn movements from the roundabout circulating traffic. (See Figure 915-1.)

splitter island The raised island at each two-way leg between entering vehicles and exiting vehicles, designed primarily to deflect entering traffic.

splitter island envelope The raised splitter island and the painted channelization surrounding it. (See Figure 915-1.)

stopping sight distance The sight distance required to detect a hazard and safely stop a vehicle traveling at design speed.

superelevation The rotation of the roadway cross section in such a manner as to overcome part of the centrifugal force that acts on a vehicle traversing a curve.

rural area A nonurban area.

truck apron The optional, outer, mountable portion of the central island of a roundabout between the raised, nontraversable area of the central island and the circulating roadway. (See Figure 915-1.)

turning radius The radius that the front wheel on the outside of the curve of the design vehicle travels while making a turn. (See Figure 915-3.)

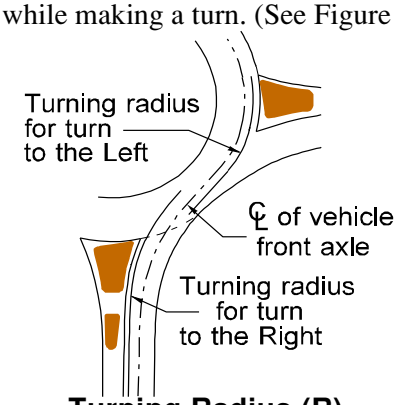

Turning Radius (R)
Figure 915-3

urban area One of the following areas:

- Within the federal urban area boundary as designated by FHWA.
- Characterized by intensive use of the land for the location of structures and receiving such urban services as sewers, water, and other public utilities and services normally associated with urbanized areas.
- With not more than twenty-five percent undeveloped land.

yield-at-entry The requirement that vehicles on all approaches yield to vehicles within the circulating roadway.

yield point The point of entry from an approach into the circulating roadway. If necessary, entering traffic must yield to circulating traffic at this point before entering the circulating roadway.

915.04 Roundabout Categories

Roundabouts have been categorized according to size and environment to facilitate discussion of specific performance or design issues. There are six basic categories based on environment, number of lanes, and size:

- Mini roundabouts
- Urban compact roundabouts
- Urban single-lane roundabouts
- Urban double-lane roundabouts
- Rural single-lane roundabouts
- Rural double-lane roundabouts

Characteristics of the different roundabout categories are summarized on Figure 915-6. Figure 915-6 represents the general characteristics of the roundabout categories, not design limits.

Separate categories have not been identified for suburban environments. Suburban settings combine higher approach speeds common in rural areas with multimodal activity that is more similar to urban settings. Therefore, generally, design suburban roundabouts as urban roundabouts but with the high-speed approach treatments recommended for rural roundabouts.

(1) Mini Roundabouts

Mini roundabouts are small roundabouts used in low-speed urban environments and are not suitable for use on a state route. They can be useful in low-speed urban environments, with average operating speeds of 35 mph or less, where a conventional roundabout is precluded by right of way constraints. In retrofit applications, mini roundabouts are relatively inexpensive because they typically require minimal additional pavement at the intersecting roads. They are mostly recommended when there is insufficient right of way for an urban compact roundabout. Because they are small, mini roundabouts are perceived as pedestrian friendly with short crossing distances and very low vehicle speeds on approaches and exits. The mini roundabout is designed to accommodate passenger cars without requiring them to drive over the central island. A mountable central island is recommended because larger vehicles might be required to cross over it. Provide speed control around the mountable central island in the design by requiring horizontal deflection. Capacity for this type of roundabout is expected to be similar to that of the urban compact roundabout.

(2) Urban Compact Roundabouts

Urban compact roundabouts are also intended to be pedestrian and bicyclist friendly. Because of the smaller design vehicle, they are normally not suitable for use on a state route. Their perpendicular approach legs require very low vehicle speeds. All legs have single-lane entries. However, the urban compact treatment meets all the design requirements of effective roundabouts. The principal objective of this design is to enable pedestrians to have safe and effective use of the intersection. Consider urban compact roundabouts only where capacity is not a critical issue. The geometric design includes raised splitter islands that incorporate at-grade pedestrian storage areas, and a nonmountable central island. There is usually a truck apron surrounding the compact central island to accommodate large vehicles.

(3) Urban Single-Lane Roundabouts

Urban single-lane roundabouts are characterized as having single-lane entries at all legs and one circulating lane. They are distinguished from urban compact roundabouts by their larger inscribed circle diameters and more tangential entries and exits, resulting in higher capacities. Their design allows slightly higher speeds at the entry, on the circulating roadway, and at the exit. This roundabout design is focused on achieving consistent entering and circulating vehicle speeds. The geometric design includes raised splitter islands, a nonmountable central island, and (preferably) no apron. However, a truck apron might be necessary to allow large trucks to make left turns. When a truck apron is used, design the roundabout so that a bus will not need to use it.

(4) Urban Double-Lane Roundabouts

Urban double-lane roundabouts include all roundabouts in urban areas that have at least one entry with two lanes. They include roundabouts with entries on one or more approaches that flare from one to two lanes. These require wider circulating roadways to accommodate two vehicles traveling side by side. The speeds at the entry, on the circulating roadway, and at the exit are similar to those for the urban single-lane roundabouts. It is important that the vehicular speeds be consistent throughout the roundabout. Geometric design includes raised splitter islands, a nonmountable central island, and appropriate horizontal deflection.

Alternate routes may be provided for bicyclists who choose to bypass the roundabout. Delineate bicycle and pedestrian pathways clearly with sidewalks and landscaping to direct users to the appropriate crossing locations and alignment. Urban double-lane roundabouts located in areas with high pedestrian or bicycle volumes might have special design requirements.

When a double-lane roundabout is required for the design year but traffic projections indicate that one lane will be sufficient for 10 years or more, consider restricting it to one lane until traffic volumes require a double-lane roundabout.

(5) Rural Single-Lane Roundabouts

Rural single-lane roundabouts generally have high approach speeds. They require supplementary geometric and traffic control device treatments on approaches to encourage drivers to slow to an appropriate speed before entering the roundabout. Rural roundabouts may have larger diameters than urban roundabouts to allow slightly higher speeds at the entries, on the circulating roadway, and at the exits. This is possible if the current and anticipated future pedestrian volumes are low.

Design rural roundabouts that might become part of an urbanized area with slower speeds and pedestrian treatments. However, in the interim, provide supplementary approach and entry features to achieve safe speed reduction. Supplemental geometric design elements include extended and raised splitter islands, a nonmountable central island, and adequate horizontal deflection.

The geometric design includes a truck apron where necessary for WB-50 and larger trucks to use the roundabout. Design the roundabout so that a WB-40 will not be required to use the truck apron.

(6) Rural Double-Lane Roundabouts

Rural double-lane roundabouts have speed characteristics similar to rural single-lane roundabouts. They differ in having two entry lanes, or entries flared from one to two lanes, on one or more approaches. Consequently, many of the characteristics and design features of rural double-lane roundabouts mirror those of their urban counterparts. The main design differences are designs with higher entry speeds and larger diameters, and recommended supplementary approach treatments. Design rural roundabouts that might become part of an urbanized area for slower speeds, with design details that fully accommodate pedestrians and bicyclists. However, in the interim, design approach and entry features to achieve safe speed reduction.

When a double-lane roundabout is required for the design year but traffic projections indicate that one lane will be sufficient for at least 5 to 10 years, consider restricting it to one lane until traffic volumes require a double-lane roundabout.

915.05 Capacity Analysis

A capacity analysis is required for each proposed roundabout to compare it to other types of intersection control.

Design roundabouts so that the demand volume to capacity ratio is 0.85 or less and the anticipated delays are comparable to other types of intersection control.

There are two methods of performing the capacity analysis:

- An analysis based on gap acceptance (the Australian method). Use the method given in the *Austroad Guide* or the *Highway Capacity Manual*.
- An empirical formula based on measurements at a saturated roundabout (the British method). Use the method given in TRRL Laboratory Report 942.

While each method has advantages, it is felt there is currently not enough United States performance data on which to base the empirical method analysis. Therefore, the gap acceptance method is preferred.

Figure 915-7 may be used to estimate the entry capacity of a roundabout; however, perform a capacity analysis using other methods to verify roundabout capacity.

915.06 Geometric Design

(1) Design Vehicle

The physical characteristics of the design vehicle are one of the elements that control the geometric design of a roundabout. See Chapter 910 for guidance on the selection of a design vehicle. Use the largest vehicle selected for any leg as the design vehicle for the roundabout. For a roundabout on a state highway, this is the WB-50 vehicle. Design a roundabout so that the design vehicle can use it with 2 ft clearance from the turning radius to any curb face. The rear wheel of a semitrailer may encroach on the truck apron.

It is desirable to design the circulating roadway so that a BUS design vehicle in urban areas and a WB-40 in rural areas can use the roundabout without encroaching on the truck apron.

Design roundabouts on state routes so the WB-67 can use it without leaving the truck apron or encroaching on a curb. Use vehicle turning path templates to verify that this vehicle can make all state highway to state highway movements.

The vehicle path through a roundabout will normally contain reverse or compound curves. To check the roundabout for the design vehicles, use a template generated for each path.

(2) Deflection and Design Speed

For a roundabout to work properly, it must be designed to reduce the relative speeds between conflicting traffic streams. The most significant feature that will control the speed is adequate deflection. The deflection is expressed as the radius of the center line of a vehicle path through the roundabout. Figures 915-8a and 8b illustrate the vehicle paths for determining deflection.

The vehicle path can be adjusted by:

- Changing the alignment and width of the entry and the shape, size, and position of the approach splitter island.
- Changing the central island size.
- Staggering alignment between entrance and exit.

The deflection design speed is controlled by the path radius and cross slope of the roadway. Figure 915-4 gives the deflection radii for design speeds for roadways that slope down to the outside of the curve (-2%), that are level (0%), and that slope down to the inside of the curve (2%). Use the following equation to make the final adjustments for speeds between those given:

$$V = \sqrt{\frac{R(c+f)}{6.69}}$$

Where:

V = Design speed in mph

R = The deflection radius in feet.

c = Slope of the roadway in percent

f = Side friction factor from Figure 915-4

Design roundabouts so that deflection limits the entry and circulating speeds to those given on Figure 915-6. In areas with a large number of pedestrians or bicyclists, design roundabouts for a maximum speed of 15 to 20 mph.

Design Speed (mph)	Deflection Radius (ft) Cross Slope -2%	0%	2%	Side Friction Factor f
10	20	20	20	38
15	50	50	45	32
20	110	100	95	27
25	200	185	170	23
30	335	300	275	20
35	515	455	410	18

Deflection
Figure 915-4

In addition to achieving an appropriate design speed, achieving speed consistency for all movements is also important. Speed consistency is achieved when the differences between speeds of paths that merge, cross, or parallel each other do not exceed 12 mph.

Figure 915-9 shows five critical path radii to be checked for each leg. The entry path (R_1) is the minimum radius for through traffic approaching the yield line. The circulating path (R_2) is the minimum radius for through traffic around the central island. The exit path (R_3) is the minimum radius for through traffic into the exit. The left-turn path (R_4) is the minimum radius for the conflicting left-turn movement. The right-turn path (R_5) is the minimum radius for a right-turning vehicle. These vehicular path radii are determined as shown on Figures 915-8a and 8b.

(3) Inscribed Diameter

The inscribed diameter is controlled by the space available, the design speed, and the number of legs. The size of the inscribed diameter is a balance between designing for large vehicles and providing adequate deflection for the design speed. Select a diameter that will result in a speed at or below the desired design speed.

To meet the need to provide an adequate turning radius, the right-turn movement might require that the inscribed diameter be increased for roundabouts with more than four legs or a high skew angle. On state routes, make the turning radius 50 ft minimum with 2 ft clearance to the face of a curb.

The shape of the roundabout does not have to be round when the smaller turning radius is at least 50 ft. When a noncircular roundabout is used, where possible align it so that the heavier traffic uses the larger radius.

(4) Entry

Design the entry width to accommodate the design vehicles and required entry lanes while providing adequate deflection. Design the entry so that the entry angle is between 20° and 60°, preferably between 30° and 40°. Figure 915-10 provides additional guidance for entry design.

When the approach width, including shoulders and parking lanes, is wider than needed for the entry width, consider curb bulbs to reduce the width. For information on parking limitation at roundabouts, see 915.11.

When the roundabout is on a state route, the minimum radius is 50 ft to provide for large trucks. It is desirable for the entry radius to be smaller than both the circulating radius and the exit radius. This makes the speeds the lowest at the roundabout entry. It also helps to reduce the speed differential between entering and circulating traffic.

At single-lane roundabouts, it is not difficult to reduce the value of the entry radius. The curb radius at the entry can be reduced or the alignment of the approach can be shifted to the left to achieve a slower entry speed. This is more difficult at double-lane roundabouts. When entry curve radii are too small, the natural path of adjacent traffic can overlap. Path overlap happens when the geometry leads a vehicle in the left lane to cross the right lane to avoid the central island. (See Figure 915-11.) When path overlap occurs, it can reduce capacity and increase accidents. Take care when designing double-lane roundabouts to avoid path overlap. For more information on path overlap, see *Roundabouts: An Informational Guide*.

Flaring is an effective means of introducing a double-lane roundabout without requiring as much right of way as a full lane addition. 130 ft is the optimum length to add a second lane at a double-lane roundabout. However, if right of way is constrained, shorter lengths may be used with decreased capacity.

At rural locations, consider the speed differential between the approaches and entries. If the posted speed of the approach is greater than 15 mph above the design speed of the entry curve, consider introducing speed reduction measures before the entry curve.

(5) Circulating Roadway

Keep the circulating width constant throughout the roundabout with the minimum width equal to or slightly wider (120%) than the maximum entry width.

At single-lane roundabouts, provide a circulating roadway width plus truck apron to just accommodate the design vehicle. Use appropriate vehicle-turning templates or a computer program to determine the swept path of the design vehicle through each of required turning movements. Provide a minimum clearance of 2 ft between the vehicle's tire track and a barrier curb.

Design the circulating radius, R_2 on Figure 915-9, to be larger than the entry radius. In some cases where capacity is not a concern, it might not be possible for the circulating radius to be greater than the entry radius. In such cases, the entry radius may be greater than the circulating radius, provided the difference in speeds is less than 12 mph and preferably less than 6 mph.

(6) Exit

Design the exit width to accommodate the design vehicles while providing adequate deflection. Figure 915-10 provides additional guidance for exit design.

Generally, design the exit radius, R_3 on Figure 915-9, larger than the entry radius (R_1) or the circulating radius (R_2). The larger exit curve radii improve the ease of exit and minimize the likelihood of congestion at the exits. This, however, is balanced by the need to maintain low speeds at the pedestrian crossing on exit. If the exit path radius is smaller than the circulating path radius, vehicles might be traveling too fast to negotiate the exit and crash into the splitter island or into oncoming traffic. Exit path radius not significantly greater than the circulating path radius will ensure low speeds at the pedestrian crossing.

At single-lane roundabouts with pedestrian activity, design exit radii the same as or slightly larger than the circulating radius in order to minimize exit speeds. However, at double-lane roundabouts, additional care must be taken to minimize the likelihood of exit path overlap. Exit path overlap can occur when a vehicle on the left side of the circulating roadway exits into the right exit lane. Where no pedestrians are expected, make the exit radii large enough to minimize the likelihood of exiting path overlap. Where pedestrians are present, tighter exit curvature might be necessary to ensure low speeds at the pedestrian crossing.

When the departure roadway width, including shoulders and parking lanes, is wider than needed for the exit width, consider curb bulbs to reduce the width.

(7) Turning movements

Evaluate the left- and right-turn radii, R_4 and R_5 on Figure 915-9, to ensure that the maximum speed differential between entering and circulating traffic is no more than 12 mph. The left-turn movement is the lowest circulating speed. The left-turn radius can be determined by adding 5 ft to the central island radius.

(8) Sight Distance

The operator of a vehicle approaching a roundabout needs to have an unobstructed view of the splitter island, central island, yield point, and sufficient lengths of the intersecting roadways to permit recognition of the roundabout and to initiate the required maneuvers to maintain control of the vehicle and to avoid collisions. To do this, two aspects of the sight distance are necessary:

- **Stopping Sight Distance.** Provide the stopping sight distance given on Figure 915-5 at all points on the approach roadways, the circulating roadway, and the departure roadways. See Chapter 650 for additional information on stopping sight distance.

Speed (mph)	Stopping Sight Distance (ft)
10	47
15	77
20	113
25	153
30	198
35	248

Stopping Sight Distance for Roundabouts
Figure 915-5

- **Intersection Sight Distance.** For intersection sight distance at roundabouts, provide traffic a clear view of traffic on the circulating roadway and approaching the roundabout on the leg to the left for a distance equal to that traveled in 4.5 seconds. The required gap is also a function of capacity and, at lower volumes, a larger gap may be required. However, do not use an intersection sight distance less than the stopping sight distance (Figure 915-5).

  Because traffic is approaching a yield condition and might not be required to stop before entering a roundabout, provide the sight distance along the approach for 50 ft. Momentary sight obstructions that do not hide a vehicle, such as poles, sign posts, and

narrow trees, are acceptable in the sight triangles including the central island. Guidance for intersection sight distance at a roundabout is shown on Figure 915-12.

Providing adequate sight distance will also provide clear zone.

(9) Islands

Raised islands are important for effective operation of a roundabout. Their primary purpose is to control deflection.

(a) **Central Island**. The central island is com prised of the raised, nontraversable area and may include a truck apron (Figure 915-13). The truck apron is the outer part of the central island, designed to allow for en croachment by the rear wheels of large trucks.

The primary control of the central island size is the inscribed diameter, the required circulating width, and the required deflection. When the required circulating width for the large vehicles results in a deflection radius larger than the maximum for the design speed, increase the central island diameter to achieve the desired deflection radius and provide a truck apron. Make the surfacing of the truck apron different from the circulating roadway. However, make the surfacing of the apron different from the sidewalks so that pedestrians are not encouraged to cross the circulating roadway. Use a 3 in mountable curb between the circulating roadway and the truck apron.

Use a 6 in or higher barrier curb between the truck apron and the nontraversable area. Landscape the raised, nontraversable area to improve the visual impact of the roundabout to approaching drivers. When designing landscaping, consider sight distance and roadside safety. Also, consider maintenance needs for access to the landscaping in the central island.

When designing the landscaping for the central island, do not use items that might tempt people to take a closer look. Do not place street furniture that may attract pedestrian traffic to the central island, such as benches or monuments with small text. Design fountains or monuments in the central island in a way that will enable proper viewing from the perimeter of the roundabout. In addition, design and locate them to minimize the possibility of impact from an errant vehicle.

(b) **Splitter Island**. Splitter islands are built at each two-way leg. They serve to:

- Control the entry and exit speeds by providing deflection.
- Prevent wrong way movements.
- Provide pedestrian refuge.
- Provide a place to mount signs.

The desirable length of a splitter island envelope is equal to the stopping sight distance for the design speed of the roadway approaching the roundabout. (See Chapter 650.) Make the extensions of the curves that form the splitter islands tangent to the outside edge of the central island. The minimum width of the island at any crosswalk is 6.5 ft. Figure 915-14 gives guidance on the design of splitter islands.

For information on shoulders at islands, island nose radii, nose offsets, and other details, see Chapter 910.

(10) Grades and Superelevation

It is preferred that the grade on all of the intersecting roadways at a roundabout is 4% or flatter and that the grades be constant through the roundabout or that the roundabout be in a sag vertical curve. When a roundabout must be built at or near the crest of a vertical curve on one of the roadways, pay special attention to the sight distances. For additional information on grades at roundabouts, see *Roundabouts: An Informational Guide*.

Do not use superelevation for the circulating roadway. It is desirable to maintain the normal 2% cross slope from the central island to the outside of the circle. (See Figure 915-4) This will improve drainage and help reduce the speed of circulating traffic.

(11) Right-Turn Slip Lane

Right-turn slip lanes may be used, with justification, when a right-turn movement is heavy enough to lead to a breakdown in round-about operation and the radius produces a speed

comparable to the speed through the roundabout. For additional information on channelization for right-turn slip lanes, see right turn lanes at islands in Chapter 910 and *Roundabouts: An Informational Guide*.

(12) Design Clear Zone

For the right side of the circulating roadway, see Chapter 700 using the R_2 speed for the required design clear zone. Do not place light standards or other poles without breakaway features in splitter islands or on the right side just downstream of an exit point. When any approach leg has a posted speed of 45 mph or higher, place no fixed object, water features with a depth of 2 ft or more, or other hazard in the central island. At roundabouts with all approach legs posted at 40 mph or less, avoid water feature with a depth of 2 ft or more in the central island. Avoid fixed objects in central islands when the island diameter is less than 65 ft. Within the central island, clear zone is desirable to provide both a recovery area for errant vehicles and sight distance. When necessary to protect features in the central island, provide a central island barrier curb 18 in high or higher.

915.07 Pedestrians

Pedestrian crossings are unique at roundabouts in that the pedestrian is required to cross at a point behind the vehicles entering the roundabout. The normal crossing point at intersections is in front of these vehicles. For this reason, mark all pedestrian crosswalks at urban roundabouts and at rural roundabouts when pedestrian activity is anticipated. Position the crosswalk one car length, approximately 20 ft, from the yield point and use the raised splitter island as a pedestrian refuge. (See Figures 915-14 and 15.) Consider landscaping strips to discourage pedestrians crossing at undesirable locations.

Provide a barrier-free passageway at least 6 ft wide, 10 ft desirable, through this island for persons with disabilities. Whenever a raised splitter island is provided, also provide pedestrian refuge. This facilitates the pedestrian crossing in two separate movements.

Give special attention to assisting pedestrians who are visually impaired through design elements. These pedestrians typically attempt to maintain their approach alignment to continue across a street in the crosswalk. A roundabout requires deviation from that alignment. Provide appropriate informational cues to pedestrians regarding the location of the sidewalk and the crosswalk.

See Chapter 1025 for sidewalk ramps and additional information on pedestrian needs.

915.08 Bicycles

The operating speed of vehicles within smaller low speed roundabouts is, in most cases, the same speed as that of bicyclists and both can use the same roadway without conflict or special treatment. Larger roundabouts with higher operating speeds can present problems for the bike rider and an alternate bike path, a shared use sidewalk, or warning signs might be necessary. If the bike riders are children, as in the case of a nearby elementary school, consider signing and pavement markings directing them to use the adjacent sidewalk. End all bicycle lanes before they enter a roundabout, with the bicycles either entering traffic to use the circulating roadway or leaving the roadway on a separate path or a shared use sidewalk. See Figure 915-15 for the recommended design for ending a bicycle lane with a shared use sidewalk at a roundabout.

915.09 Signing and Pavement Marking

Roundabouts, being a new concept in Washington State, require standardized signing and pavement markings to familiarize motorists with their intended operation.

Roundabout signing is shown on Figure 915-16. Locate signs where they have maximum visibility for road users but a minimal likelihood of obscuring other signs, pedestrians, or bicyclists. To the extent possible, use standard signs and pavement markings contained in the MUTCD. Advance warning signs depicting the roundabout with a symbol not contained in the MUTCD are not acceptable. A diagrammatic guide sign, as shown in the figure, can be used to provide the

driver with destination information. Provide a route confirmation sign on all state routes shortly after exiting the roundabout.

Pavement markings are shown on Figure 915-17. Lane lines between lanes within the circulating roadway are not normally provided, regardless of the width of the circulating roadway. When lane lines are to be used, include the striping plan with the roundabout approval request.

915.10 Illumination

For a roundabout to operate satisfactorily, a driver must be able to enter, move through, and exit the roundabout in a safe and efficient manner. To accomplish this, a driver must be able to see the layout and operation in time to make the appropriate maneuvers. Adequate lighting is needed for this at night.

Provide illumination for roundabouts with any one of the following:

- At least one leg is a state route or ramp terminal.
- It is necessary to improve the visibility of pedestrians and bicyclists.
- One or more of the legs are illuminated.
- An illuminated area in the vicinity can distract the driver's view.
- Heavy nighttime traffic is anticipated.

Provide illumination for each of the conflict points between circulating and entering traffic in the roundabouts and at the beginning of the raised splitter islands. Figure 915-18 depicts the light standard placement for a four-legged roundabout. See Chapter 840 for additional information and requirements on illumination. A single light source located in the central island is not acceptable. When one or more of the legs are illuminated, provide a light level within the roundabout approximately 50% higher than the highest level on any leg. Use a standard high pressure sodium vapor luminaire with a medium or short cut-off light distribution for the light source. Position the luminaire over the outside edge of the roundabout to use the "house side" lighting to illuminate the pedestrian crosswalks.

915.11 Access, Parking, and Transit Facilities

No road approach connections to the circulating roadway are allowed at roundabouts, unless it is designed as a leg to the roundabout appropriate for the traffic volume using the approach. Road approach connections to the circulating roadway are allowed only when no other reasonable access is available. It is preferred that road approaches not be located on the approach or departure legs within the length of the splitter island. The minimum distance from the circulating roadway to a road approach is controlled by the corner clearance using the circulating roadway as the crossroad. (See Chapter 920.)

Parking is not allowed in the circulating roadway or on the approach roadway past the crosswalk. It is also desirable that no parking be allowed on the approach or departure legs for the length of the splitter island. See Chapter 1025 for additional information on parking limitations near a crosswalk.

Transit stops are not allowed in the circulating roadway or on the approach roadway past the crosswalk. Locate transit stops on departure legs in a pullout or where the pavement is wide enough that a stopped bus will not block the through movement of traffic. Locate transit stops on approach or departure legs where they will not obstruct sight distance.

915.12 Procedures

(1) Selection

Use the following steps when selecting aroundabout for intersection control:

(a) Consider the context. Are there con straints that must be addressed? Are there site-specific and community impact reasons why a roundabout of a particular size would not be a good choice?

(b) Determine the roundabout category (Figure 915-6) and a preliminary lane configuration (Figure 915-7) based on capacity requirements.

(c) Identify the justification category. See 915.12(2). This establishes why a round

about might be the preferred choice and determines the need for specific information.

(d) Perform the analysis appropriate to the selection category. If the selection is to be based on operational performance, use the appropriate comparisons with alternative intersections

(e) Determine the space requirements and feasibility.

(f) If additional space must be acquired or alternative intersection forms are viable, an economic evaluation will be useful.

(g) Contact all approving authorities to obtain concurrence that a roundabout is an acceptable concept at the proposed location. On state routes this includes the HQ Design Office.

(2) Justification

Consider roundabouts only when fulfilling one or more of the following justification categories:

(a) **Safety Improvement.** At high accident location intersections, a roundabout might be a method of reducing accidents by reducing the number of conflict points. At conven tional intersections, many accidents involve left-turning or crossing vehicles; with roundabouts these movements are eliminated. With the low operating speeds and low entry angles, accidents at roundabouts are generally less severe.

Roundabouts in this category require an accident analysis that shows high accidents of a type that a roundabout can reduce in number or severity. In the analysis, consider any potential shift of accidents to another accident type.

(b) **Improve Intersection Capacity.** A roundabout may be analyzed as an alternative to traditional traffic control options to increase the capacity of an intersection. With traffic signals, alternating traffic streams through the intersection can cause a loss of capacity when the intersection clears between phases. In a roundabout, vehicles may enter available gaps simultaneously from multiple approaches. This can result in an advantage in capacity. This advantage becomes greater when the volume of left turning vehicles is high.

Justify roundabouts in this category with a capacity analysis showing that it can provide the required capacity comparable to the optimum design for a conventional intersection. Discuss the effects on “off-peak” traffic.

(c) **Queue Reduction.** Roundabouts can improve operations at locations where the space for queuing is limited. Roadways are often widened for queuing at traffic signals, but the reduced delays and continuous flows at roundabouts allow the use of fewer lanes. Possible applications are at interchanges where left turn volumes are high. Roundabouts at ramp terminals can improve capacity without widening a structure.

Roundabouts in this category require an analysis showing that the roundabout will eliminate the need to build additional lanes or widen a structure without additional impacts to the main line operations.

(d) **Special Conditions.** The special conditions where a roundabout might be preferred over a conventional intersection include locations with unusual geometrics; right of way limitations; closely spaced intersections; wye (Y) intersections; and, on nonstate routes, for traffic calming. Roundabouts might be better suited for intersections with unusual geometrics; such as high skew angle and offset legs. Roundabouts can provide adequate levels of operation without significant realignment or complicated signing or signal phasing.

Roundabouts can avoid the need to obtain additional right of way along the intersection legs. Roundabouts can shift any required right of way from the roadway between the intersections to the area of the intersection.

Roundabouts can eliminate closely spaced intersections, and any associated operational problems, by combining them into one intersection. The ability of roundabouts to serve high turning volumes make them a practical design at wye (Y) or tee (T) intersections.

Roundabouts proposed for a special condition require documentation indicating what the condition is and how the roundabout will address it.

(3) Approval

A proposal to install a roundabout on any route, either NHS or non-NHS, with a posted speed limit of 45 mph or higher requires an analysis of alternatives. See Chapter 910 for requirements.

HQ Design Office approval of the design is required when a roundabout is to be used on a state highway. Submit to the HQ Design Office:

- Supporting engineering data.
- Concurrence that a roundabout is an acceptable concept 915.12(1)(g)
- An intersection plan.
- Roundabout justification from 915.12 (2).
- A comparison of the roundabout to alternative intersection types with an explanation as to why the roundabout is the preferred alternative.
- A traffic analysis of the roundabout and alternative intersection types, including a discussion of any loss in level of service or increase in delay. Include the effects on "off-peak" traffic and discuss any adverse impacts of the roundabout.
- An analysis of pedestrian and bicycle activities.
- An approved analysis of alternatives for roundabouts on any state route with a posted speed of 45 mph or higher.
- The approval of the State Design Engineer or designee for roundabouts within the limits of limited access control.
- The calculated design speeds for the entry path, the circulating path, the exit path, the left-turn path, and the right-turn path for each leg of the roundabout.
- A corridor and network analysis.
- Current or projected traffic control or safety problems at the roundabout.
- Demonstration that the proposed configuration can be implemented and that it will provide adequate capacity on all approaches.
- All potential complicating factors, their relevance to the location, and any mitigation efforts that might be required.
- An economic analysis, indicating that a roundabout compares favorably with alternative control modes from a benefit-cost perspective

915.13 Documentation

The following documents are to be preserved in the project file. See Chapter 330.

- ☐ Roundabout justification
- ☐ HQ Design Office approval
- ☐ Applicable intersection documentation from Chapter 910

	Design Element	Mini (1)	Urban (2) Compact	Urban Single-Lane	Urban Double-Lane	Rural Single-Lane	Rural Double-Lane
General	Number of Lanes	1	1	1	2	1	2
	Typical max. (3) ADT	12,000	15,00	20,00	40,000	20,000	40,000
	Splitter Island Treatment	Painted, raised if possible	Raised	Raised	Raised	Raised and extended	Raised and extended
	Max. Design(4) Vehicle	SU	SU/BUS	WB-50	WB-50	WB-67	WB-67
Circulating	Inscribed Circle Diameter	45'-80'	80'-100'(5)	100'-130'(6)	150'-180'	115'-130'(6)	180'-200'
	Circulatin Roadway Design Speed	15-18 mph	16-20 mph	20-25 mph	22-28 mph	22-27 mph	25-30 mph
	Circulating Roadway Width	14'-19'	14'-19'	14'-19'	29'-32'	14'-19'	29'-32'
Entry	Max. Entry Design Speed	15 mph	15 mph	20 mph	25 mph	25 mph	30 mph
	Entry Radius	25'-45'	25'(7)-100'	35'(7)-100'	100'-200'	40'-120'(7)	130'-260'
	Entry Lane Widths	14'-16'	14'-16'	14'-16'	25'-28'	14'-16'	25'-28'

(1) Mini roundabouts are not suitable for use on a state route.

(2) Urban compact roundabouts are normally not suitable for use on a state route.

(3) Total ADT entering a 4-leg roundabout with 33% of the volume on the minor roadway. Multiply by 1.2 for 4-leg roundabouts with equal volume on both roadways. Multiply by 0.9 for 3-leg roundabouts.

(4) See Chapter 910 for selecting a design vehicle on a state route.

(5) Use 100 ft minimum on state routes.

(6) When roundabout might be expanded to a double-lane roundabout, consider using a double-lane roundabout diameter.

(7) Use 50 ft minimum on state routes.

Roundabout Categories Design Characteristics
Figure 915-6

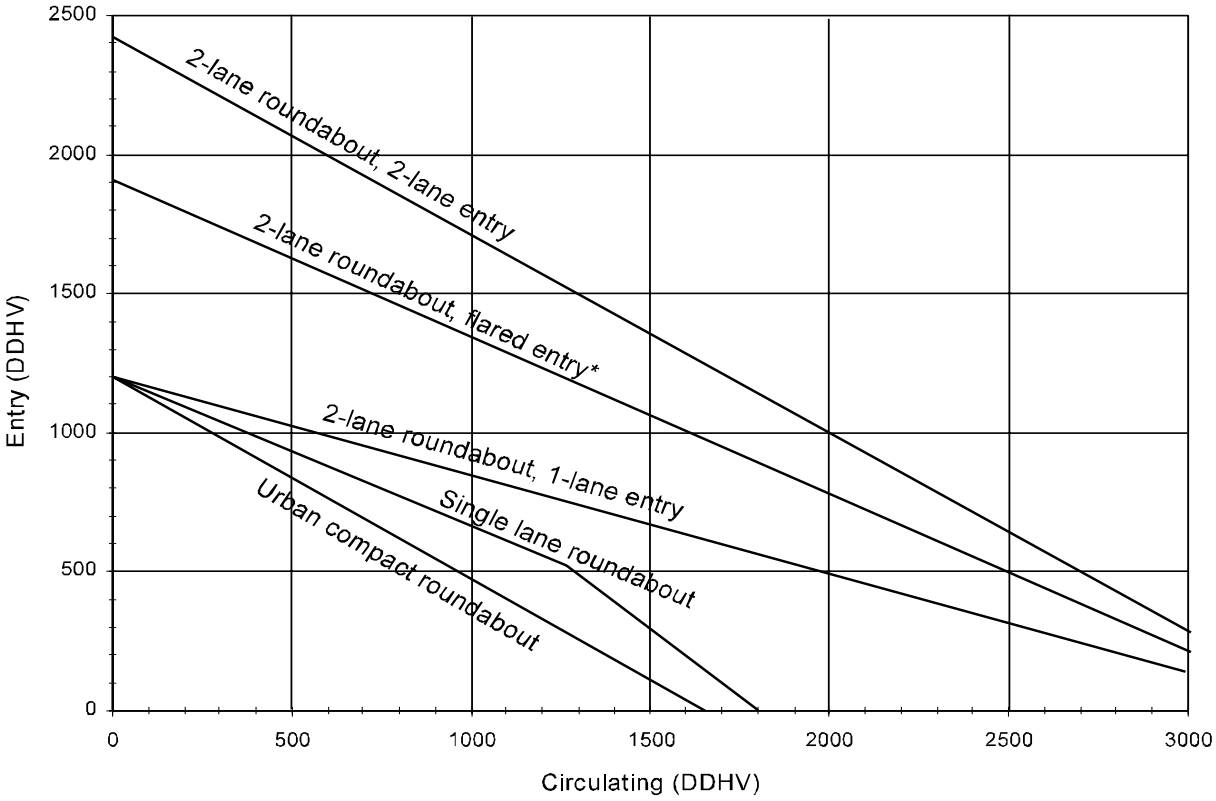

Note:

* with 2 vehicle storage lane.

DDHV in passenger car equivalents

Vehicle Type	Passenger Car Equivalent
Car	1.0
SU or BUS	1.5
Other truck	2.0
Bicycle or Motorcycle	0.5

Approximate Entry Capacity
Figure 915-7

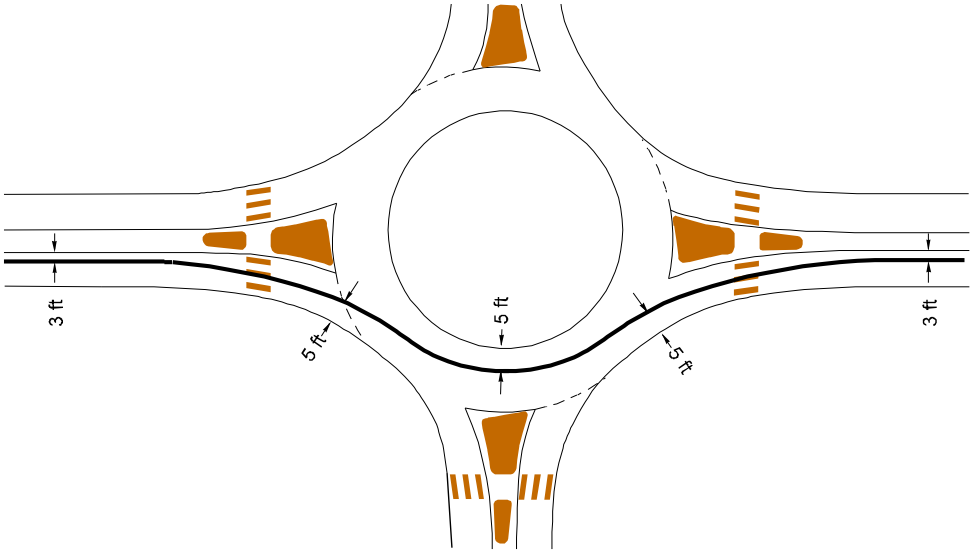

Single Lane Roundabout

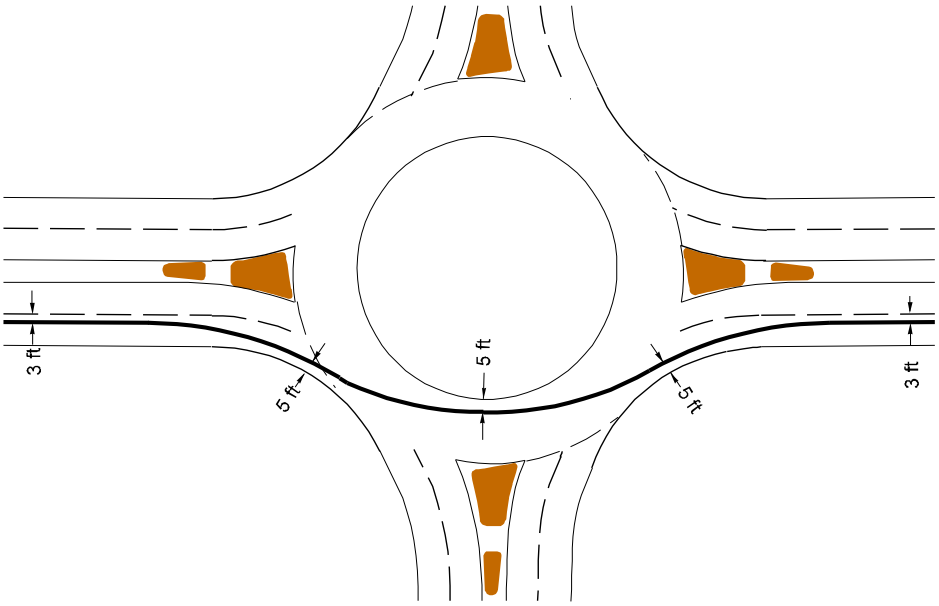

Double Lane Roundabout

Deflection Path

Figure 915-8a

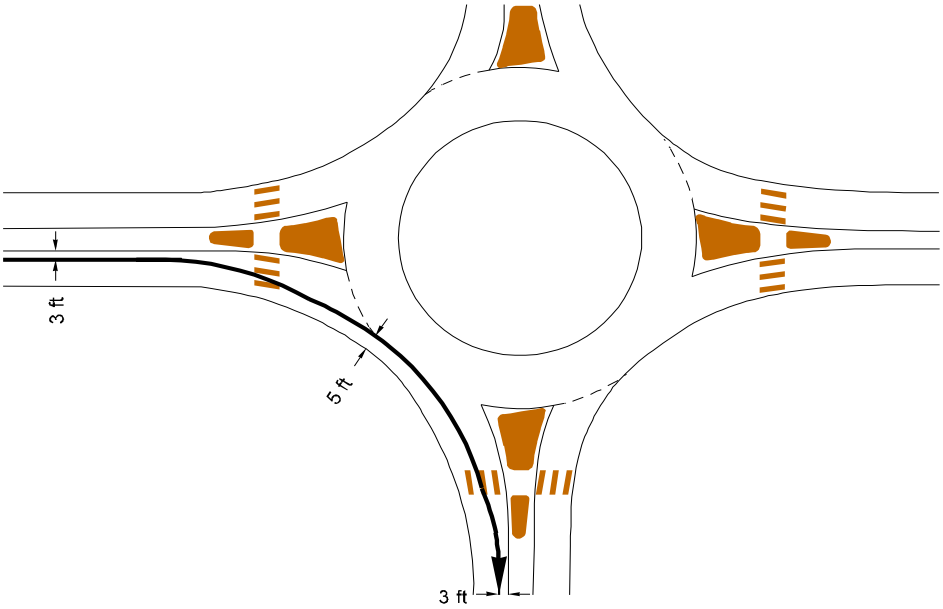

Right-Turn Movement

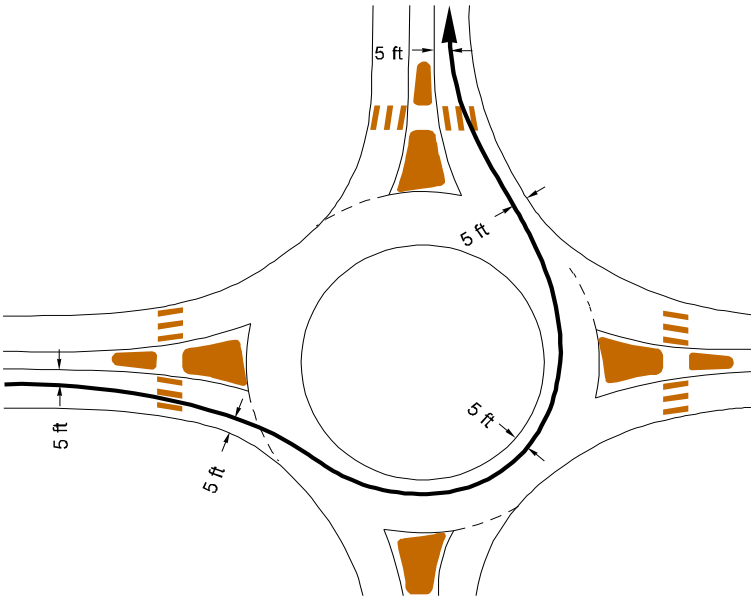

Left-Turn Movement

Deflection Path

Figure 915-8b

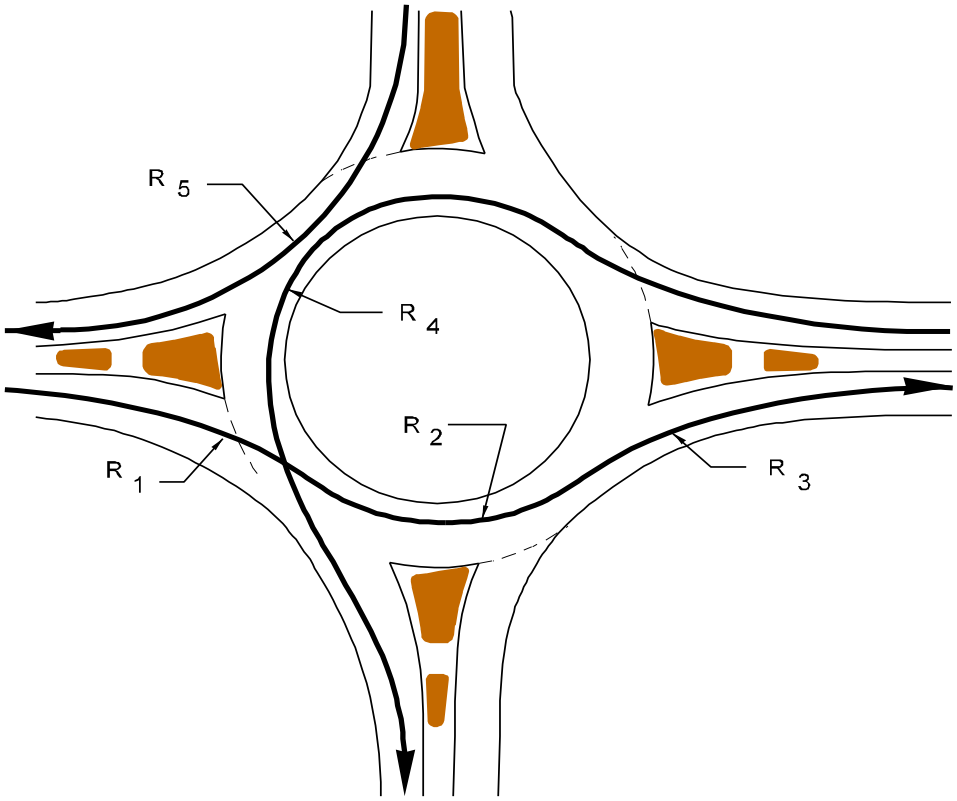

Where:

R_1 = entry path radius.

R_2 = circulating path radius.

R_3 = exit path radius.

R_4 = left-turn path radius.

R_5= right-turn path radius.

Deflection Path Radius
Figure 915-9

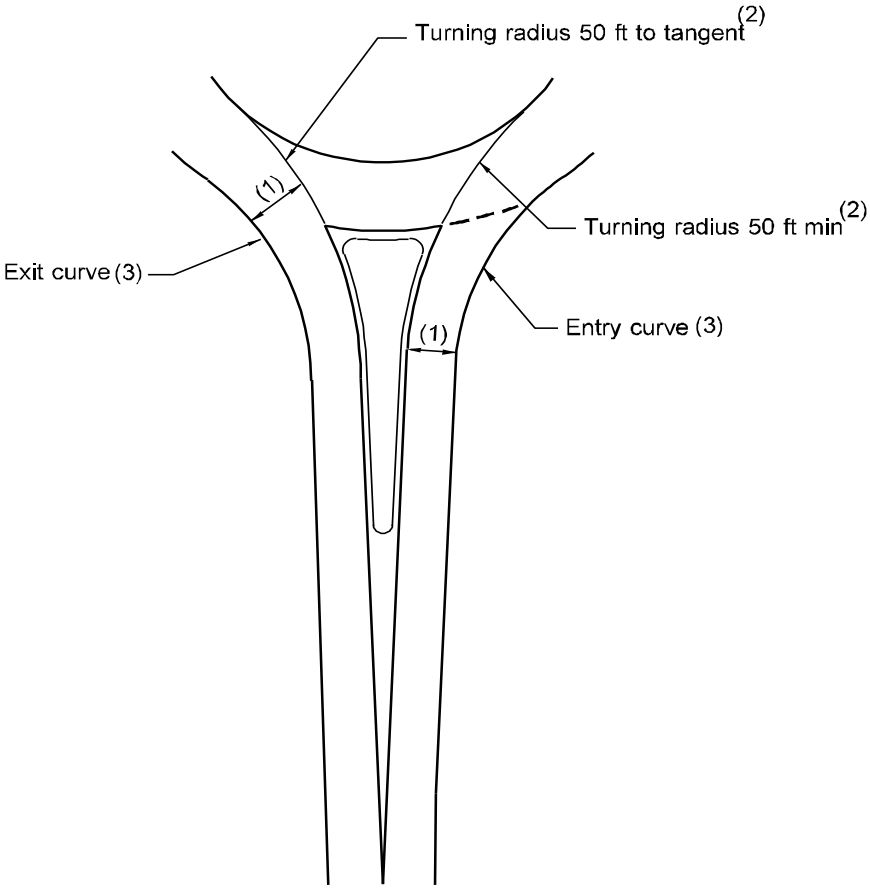

Notes:

(1) Minimum width is 15 ft for 1-lane and 25 ft for 2-lane. Entry and exit widths based on capacity needs (see Figure 915-\h 7) and design vehicle requirements (see Chapter 640 or use templates).

(2) Continuation of splitter island envelope curve tangential to central island.

(3) entry and exit curves tangential to outside edge of circulating roadway.

Entry and Exit
Figure 915-10

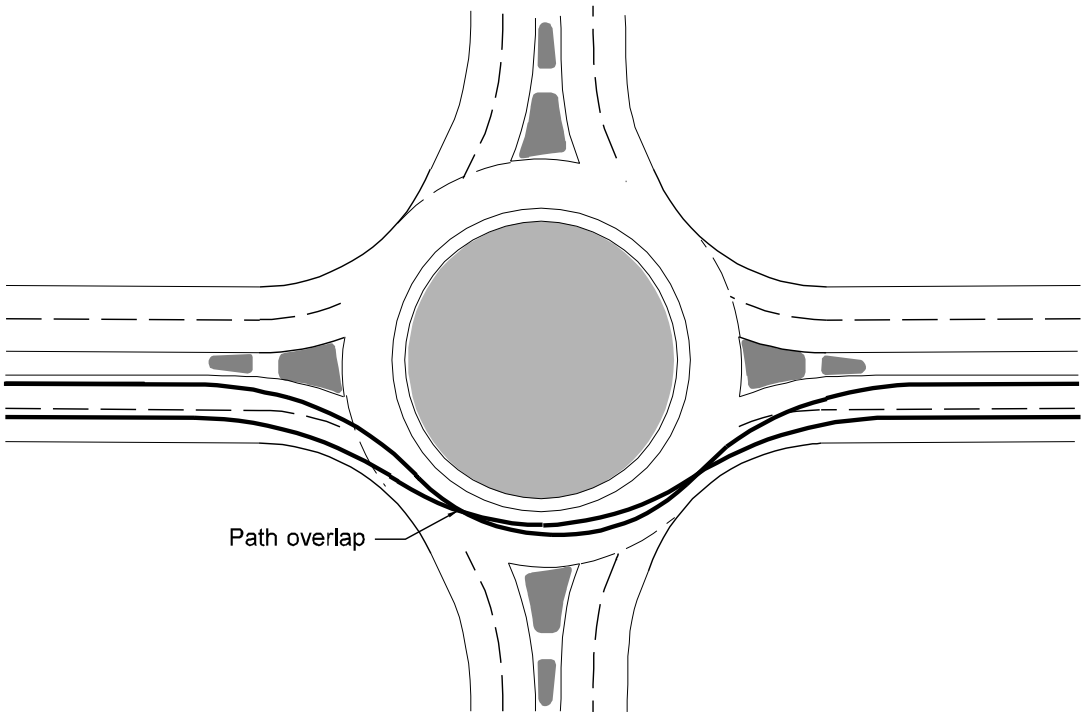

Path Overlap
Figure 915-11

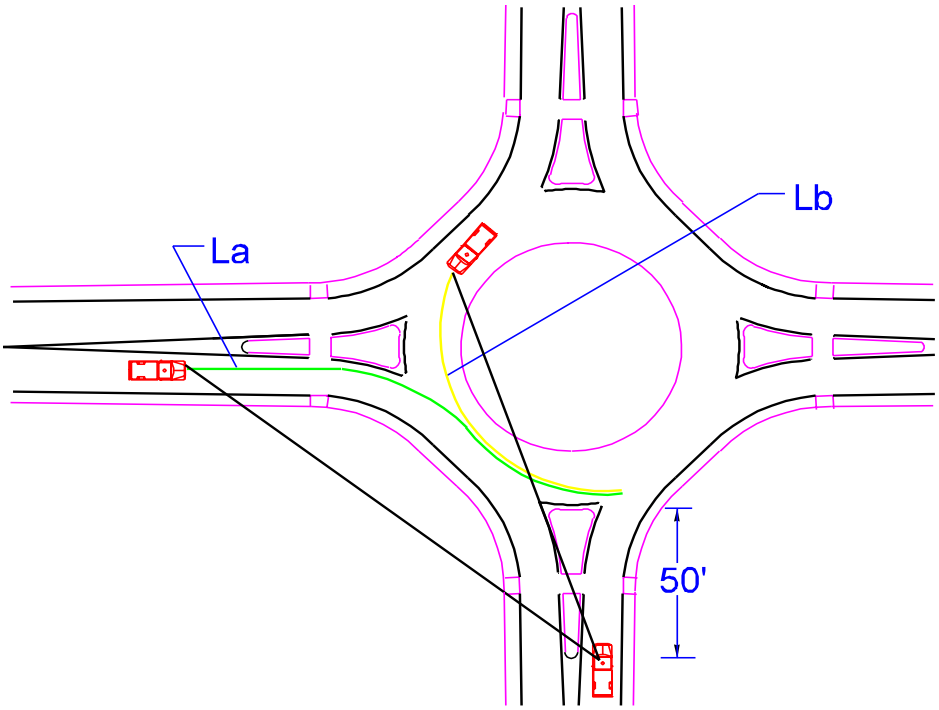

Speed (mph)	Gap Acceptance Length (min), L (ft)
15	115
20	150
25	185
30	225
35	260

Where:

La = Sight distance, measured from the yield point, along approach to the left, the minimum gap acceptance length (L) using the average of the entry speed (R_1) and the circulating speed (R_2).

Lb = Sight distance, from the yield point, on circulating roadway, the minimum gap accep tance Length (L) using the left turning vehicle speed (R_4).

Note:

See 915.06(2) and Figures 915-\h 8a and \h 8b for information on determining R_1, R_2, and R_4 speeds.

Roundabout Intersection Sight Distance
Figure 915-12

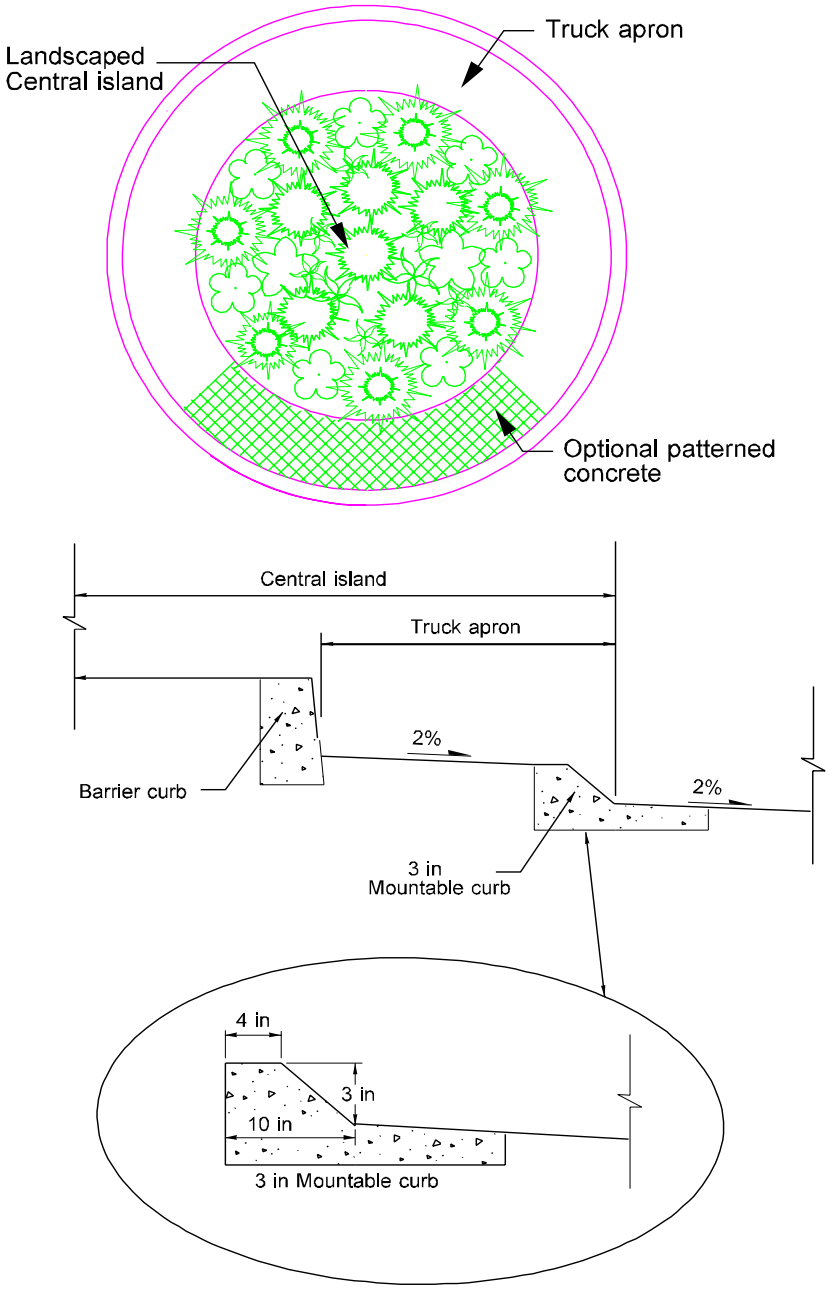

Central Island
Figure 915-13

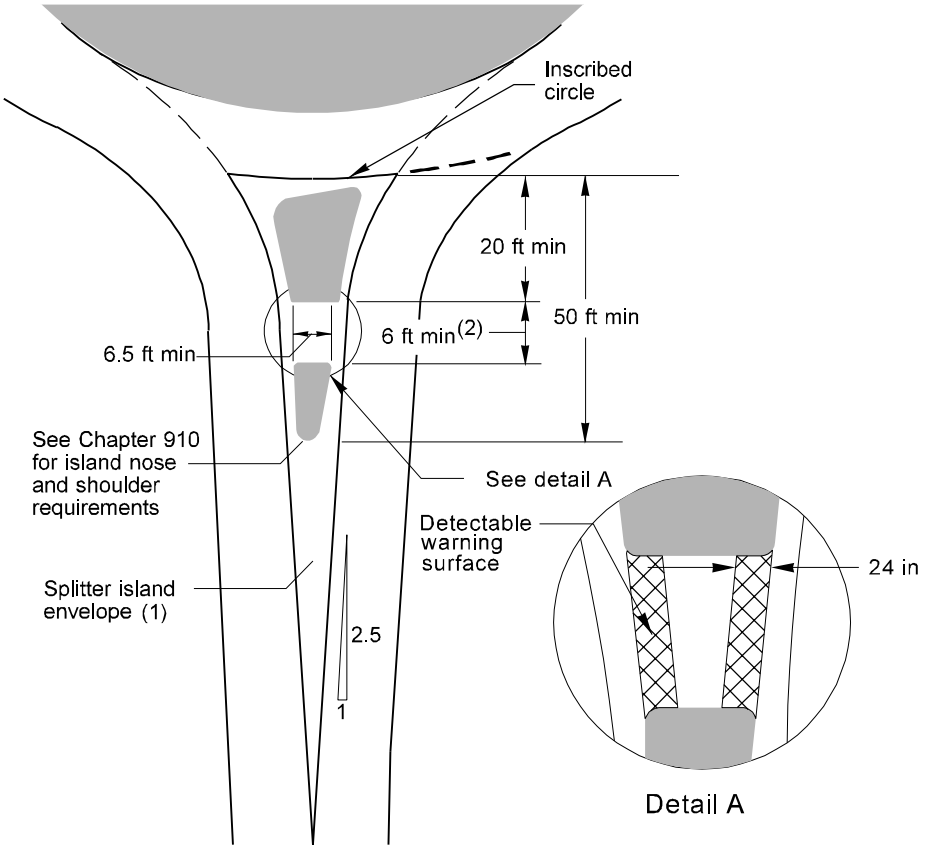

Notes:

(1) Stopping sight distance desirable for length of splitter island envelop.

(2) A 10 ft width to accommodate full crosswalk width is desirable.

Splitter Island
Figure 915-14

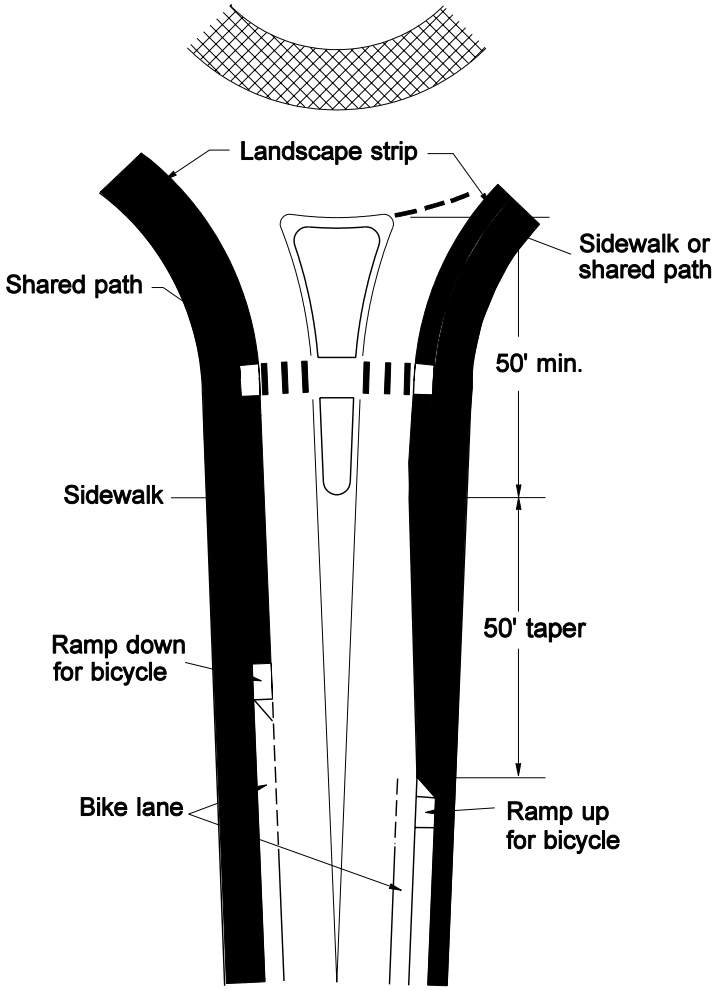

Shared Use Sidewalk
Figure 915-15

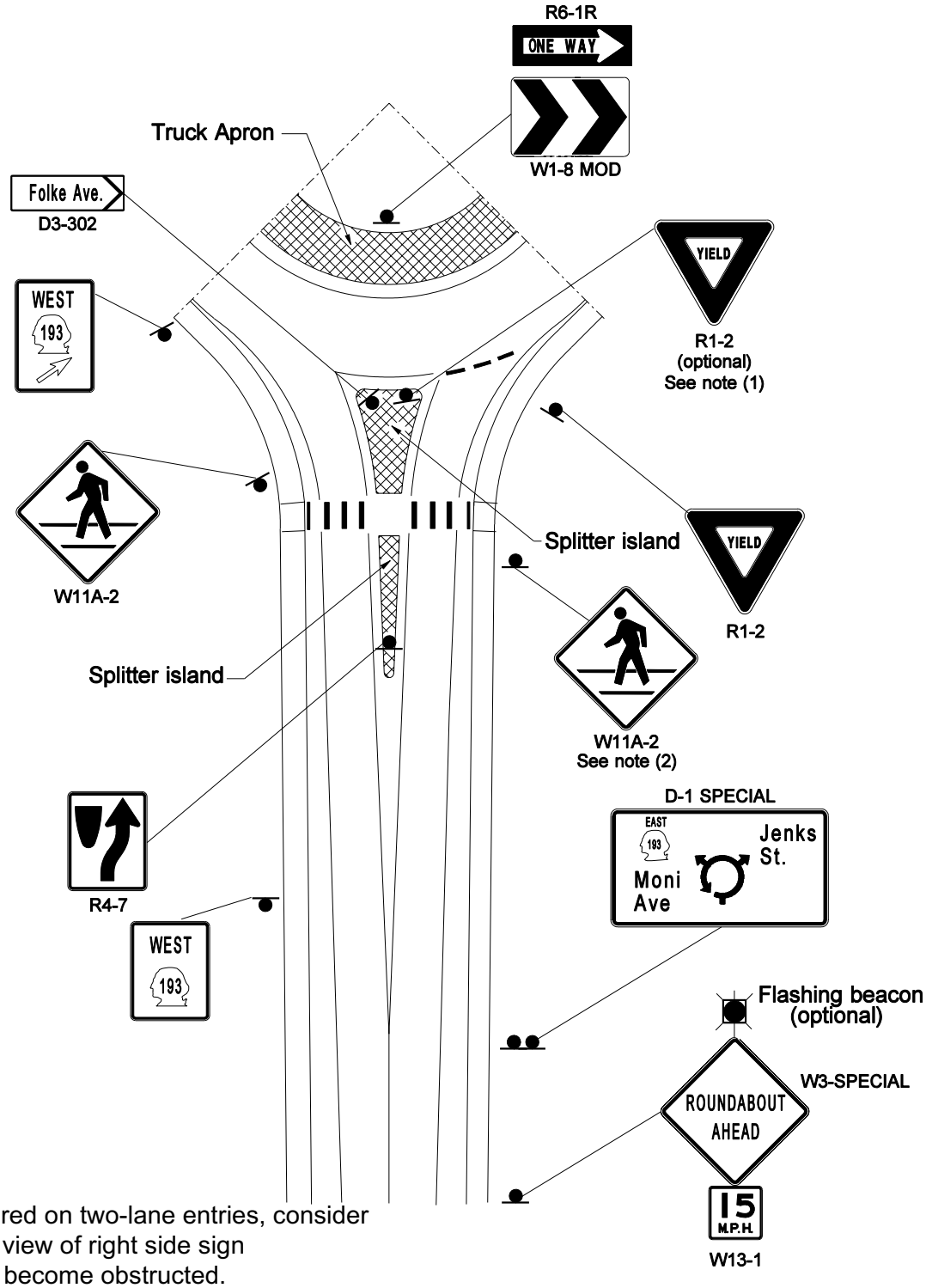

Notes:

(1) Required on two-lane entries, consider when view of right side sign might become obstructed.

(2) Locate in such a way as to not obstruct view of yield sign.

Roundabout Signing
Figure 915-16

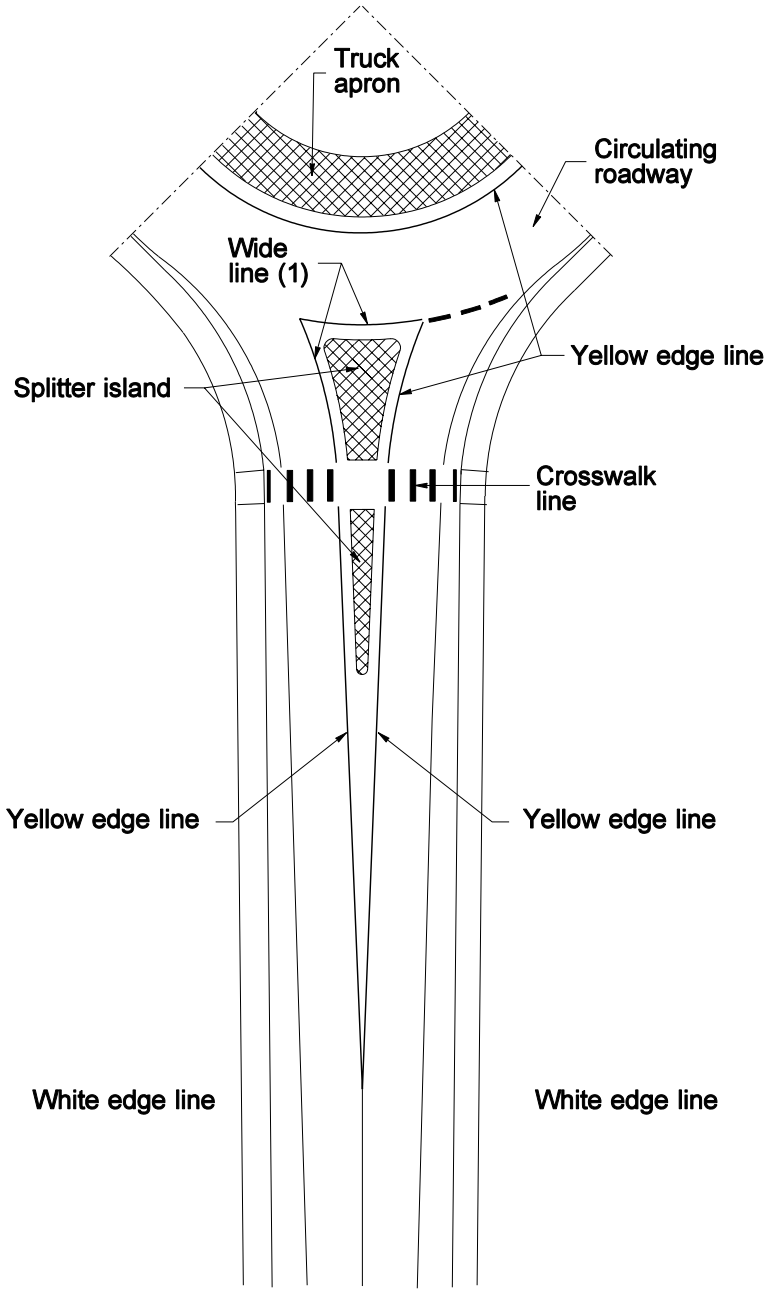

Note:

(1) Extend the wide line to the crosswalk or 25 ft down the exit leg.

Roundabout Pavement Marking
Figure 915-17

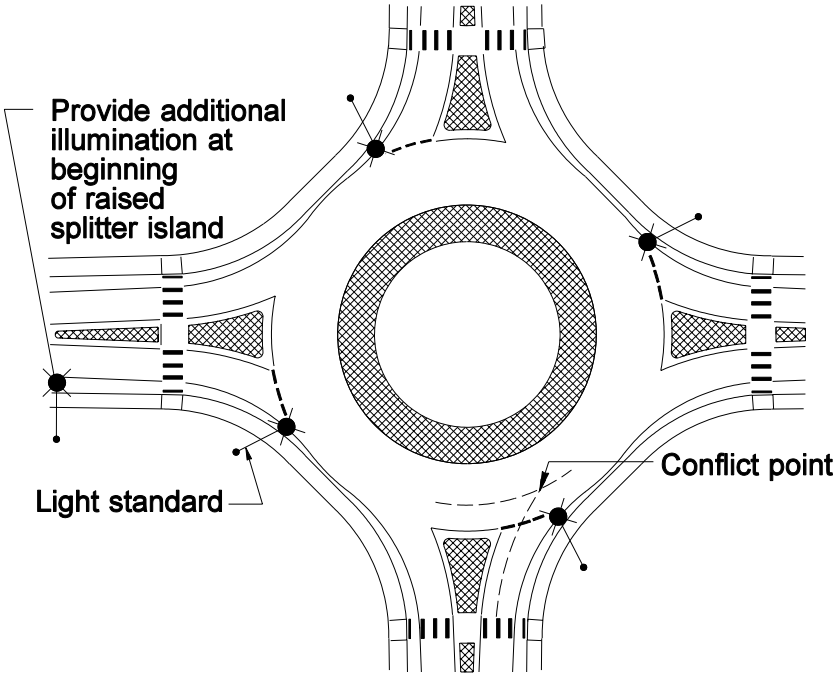

Roundabout Illumination
Figure 915-18

Washington State Department of Transportation

Design Manual Supplement

Effective Date: November 15, 2001
Supercedes: August 1, 2001

/s/ Harold Peterfeso
Acting State Design Engineer

Median Barrier Guidelines (REVISED)

I. Introduction

A. Purpose

To modify the Washington State Department of Transportation's (WSDOT's) guidelines for the installation of median barrier.

B. Background

Currently, guidelines for the use of median barrier on full access control, multilane highways are provided in Chapter 700 of the WSDOT *Design Manual*. These guidelines are essentially the same ones that were adopted in 1975 and were based on a study of California median crossovers performed in the late 1960's. The current WSDOT guidelines are also consistent with the AASHTO *Roadside Design Guide*.

Figure 700-7 of the *Design Manual* indicates that median barriers are warranted based on a combination of median width and ADT. Medians less than 30' wide and with an ADT of greater than 20,000 generally warrant a median barrier. For median widths greater than 30', median barrier is considered optional.

Review of accident history on Washington State highways and of practices in other states suggests that an increased use of median barriers is desirable. In addition, a current NCHRP project is scheduled for completion in the summer of 2001 and it is anticipated that this study will result in a change to the AASHTO guidelines.

Based on the accident history and practices of other states, this *Design Manual* Supplement changes the current median barrier policy. It is recognized that this policy might be revised again based on the results of the NCHRP study.

C. References

Design Manual, M 22-01, WSDOT

D. Implementation

This policy applies when the Standard Run column on the design matrices indicates EU (evaluate upgrade) or F (full design level). See *Design Manual* Chapter 325 for the design matrices.

Implementation of this revision will be phased to reduce impacts to projects currently in the 01-03 program.

For projects that are included in the department's 01-03 Capitol Construction Program (programs I and P), the median barrier may be programmed under a separate project as long as the work is completed within two years after the completion of the paving project. If median barrier is addressed in a separate project, maintain a separate documentation file that addresses the separation of work during the two-year time period.

For projects being developed for 03-05 this policy is effective immediately and will be funded out of the Improvement (I) program.

II. Instructions

A. Revise *Design Manual* Chapter 700

Delete Figure 700-7.

Replace 700.06 with the following.

Medians must be analyzed for the potential of an errant vehicle to cross the median and encounter oncoming traffic. Median barriers are normally used on full access control, multilane, high-speed, high traffic volume facilities. These facilities generally have posted speeds of 45 mph or greater. Median barrier is not normally placed on collector highways or other facilities that do not have full access control. Providing access through median barrier requires openings and, therefore, end-treatments.

Provide median barrier on full access control, multilane highways with median widths of 50' or less and posted speeds of 45 mph or more. Consider median barrier on highways with wider medians or lower posted speeds when there is a history of cross median accidents.

When installing a median barrier, provide left-side shoulder widths as shown in Chapters 430 and 440 and shy distance as shown in Chapter 710. Consider a wider shoulder area when the barrier casts a shadow on the roadway and hinders the melting of ice. See Chapter 640 for additional criteria for placement of median barrier. See Chapter 710 for information on the types of barriers that can be used. See Chapter 650 for lateral

clearance on the inside of a curve to provide the required stopping sight distance.

When median barrier is being placed in an existing median, identify the existing crossovers and enforcement observation points. Provide the necessary median crossovers in accordance with Chapter 960, considering enforcement needs.

B. Revise *Design Manual* Chapter 710

Add the following to the list of references in 710.04(2)(b).

700.06 Median Barrier Guidelines

Add the following to 710.05.

(5) Median Barrier Selection and Placement Considerations

As with all barriers, the most desirable installation uses a system that is the most flexible system appropriate for the location and is placed as far from the traveled way as practical. With median barriers, the deflection characteristics and placement of the barrier for one traveled way can have an impact on the opposing traffic. In addition, the median slopes and environmental issues might influence the type of barrier that is appropriate.

In narrow medians, the deflected system must not become a hazard to oncoming traffic. In addition, narrow medians provide little space for maintenance crews to repair or reposition the barrier. Avoid installing deflecting barriers in medians that provide less than 8 ft from the edge of the traveled way to the face of the barrier. In wider medians, the selection of barrier might depend on the slopes in the median.

In locations where the median slopes are relatively flat (1V:10H or flatter), unrestrained precast concrete barrier, beam guardrail, and cable barrier can be used depending on the available deflection distance. In these locations, position the barrier as close to the center as possible so that the recovery distance can be maximized for both directions. It is understood that the barrier might have to be offset from the flow line to avoid impacts to the drainage flow. Cable barrier is preferred with medians that are 30’ or wider. For medians wider than 30’, provide justification for placing a barrier closer than 15’ from the edge of the traveled way.

In wide medians where the slopes are steeper than 1V:10H but not steeper than 1V:6H, cable barrier placed near the center of the median is preferred. Placement of beam guardrail requires that the barrier be placed

at least 12' from the slope break as is shown on Figure 710-4. Do not use concrete barrier in locations where the foreslope into the face of the barrier is steeper than 1V:10H. For medians wider than 30', provide justification for placing a barrier closer than 15' from the edge of the traveled way.

In locations where the roadways are on independent alignments and there is a difference in elevation between the roadways, the slope from the upper roadway might be steeper than 1V:6H. In these locations, position the median barrier along the upper roadway and provide deflection and shy distance as discussed previously. Barrier is generally not necessary along the lower roadway except where there are fixed objects in the median.

Index

A

Acceleration lane, 940-7
Acceleration lanes, 910-8
Access, 1420-1
    approach criteria, 1420-3, 1420-5
    approach types, 1420-6
    bicycle facilities, 1420-2, 1420-4, 1420-6
    bus stops, 1420-2, 1420-4, 1420-5
    control design policy, 1420-1
    control development, 1430-1
    crossroads at interchange ramps, 1420-1
    frontage roads, 1420-7
    full control, 1420-1
    hearing, 210-12, 1430-2
    hearing plan, 1430-2
    interchanges and intersections, 1420-3, 1420-5
    mailboxes, 1420-2, 1420-4, 1420-5
    modifications to limited access plans, 1420-8
    modified control, 1420-4
    multiple use of right of way, 1420-7
    partial control, 1420-2
    pedestrian facilities, 1420-2, 1420-4, 1420-5, 1420-6
    railroad approaches, 1420-6
    report, 1430-1
    report plan, 1430-1
    road approaches, 1420-1
    roundabouts, 915-13
    utilities, 1420-2, 1420-4, 1420-5
Access control, 120-7
    full, 1420-1
    modified, 1420-4
    partial, 1420-2
Access Point Decision Report (APD Report), 1425-1
    definitions, 1425-2
    documentation, 1425-10
    eight policy topics, 1425-3
    finding of engineering & operational acceptability, 1425-4
    flow chart, 1425-14, 1425-15
    procedures, 1425-2
    references, 1425-1
    report and supporting analysis, 1425-4
    review levels, 1425-11, 1425-12
Accessible route, pedestrian, 1025-1
ADA, definition, 1025-1
ADIEM II impact attenuator, 720-2, 720-9, 720-12
Administrative appeal hearing, 210-15
Agency Request Budget (ARB), 120-15
Agreements, 240-10
    airspace, highway, utility, 1420-7
Air quality, 240-6
Airport System Plan, 120-13
Airport-highway clearance, 240-4, 240-13, 630-3
Airspace agreement, 1420-7
Alignment
    horizontal, 620-1
    monuments, 1450-2
    vertical, 630-1
Americans with Disabilities Act (ADA), 1025-1
Approaches
    full access control, 1420-1
    modified access control, 1420-4
    partial access control, 1420-2
    railroad, 1420-6
    road, 920-1, 1420-1
Approval
    access hearing plan, 1430-2
    access report, 1430-1
    corridor, FHWA, 220-9
    DEIS, 220-6
    design, level of, 330-7
    design reviews and, 330-9, 330-10
    Environmental Classification Summary, 220-2
    FEIS, 220-8
    findings and order, 210-14
    governmental agencies, 240-1
    materials source, 510-2
    PS&E process, 330-11
    Study Plan and a Public Involvement Plan (EIS), 220-3
    Work Order Authorization, CE, 220-9
    Work Order Authorization, EA, 220-10
    Work Order Authorization, EIS, 220-3
Archaeological sites, 220-5, 220-10, 220-11
Army Corps of Engineers, 240-1
Arterial HOV, 1050-1, 1050-10

Asphalt pavement
estimating, 520-3
Attenuator, impact. *See Impact attenuator*
Audible warning signals, 1025-3
Authorized road approach, 920-1
Auxiliary lanes, 620-4, 1010-1
chain-up area, 1010-5
climbing lanes, 1010-2
emergency escape ramps, 1010-4
left-turn, 910-6
one-way left-turn, 910-6
passing lanes, 1010-2
right-turn, 910-8
shoulder driving for slow vehicles, 1010-3
slow moving vehicle turnouts, 1010-3
speed change, 910-8
two-way left-turn, 910-7
Average weekday vehicle trip ends (AWDVTE), 920-1

B

Barrier curbs, 440-6
Barrier delineation, 830-5
Barrier terminal
buried terminals, 710-6
definition, 710-1
flared terminal, 710-7, 710-23
nonflared terminal, 710-7, 710-23
other anchor, 710-8
project requirements, 710-2
Barrier transition
beam guardrail transitions, 710-10
connections, 710-9
definition, 710-1
project requirements, 710-2
transitions and connections, 710-10
Barriers, traffic, 710-1
barrier deflections, 710-4
barrier design, 710-3
beam guardrail, 710-5
bridge rails, 710-15
cable barrier, 710-11
concrete barrier, 710-12
definition, 710-1
delineation, 830-5
documentation, 710-17
dragnet, 710-16
flare rate, 710-4
impact attenuator systems, 720-1
length of need, 710-5, 710-19
moveable, 810-10
project requirements, 710-1
redirectional land forms, 710-15
shared use path (bicycle), 1020-13
shy distance, 710-4
steel backed timber guardrail, 710-14
stone guardwalls, 710-15
water filled barriers, 710-16
Barricades, 810-11
Basic design level, 410-1
minor safety and minor preservation work, 410-1
required safety items of work, 410-1
Basic safety, 410-1
Beam guardrail. *See Guardrail*
Berms, earth
noise barriers, 1140-2
traffic barrier, 710-15
Bicycle Advisory Committee, 1020-4
Bicycle coordinator, 1020-1, 1020-3, 1020-7, 1020-17
Bicycle facilities, 1020-1, 1020-7
access, 1020-6
alignment, horizontal, 1020-13
barriers, traffic, 1020-13
bicycle parking, 1020-7
bicycle route, 1020-1
bike lane, 1020-1, 1020-4, 1020-16
bike lanes cross freeway off and on-ramps, 1020-16
bike route, 1020-17
bikeway, 1020-1
bollards, 1020-15
clearance, 1020-8, 1020-14, 1020-15
crossings, 1020-9
design clear zone, 1020-13
design speed, 1020-13
drainage, 1020-15
drainage grates, 1020-17
intersections, 1020-8
lighting, 1020-7, 1020-15
maintenance, 1020-6
parking, 1020-16
pavement markings, 1020-15, 1020-16, 1020-17
planning, 1020-2
railroad crossing, 1020-12
roundabouts, 915-12
Rules of the Road (RCW 46.61), 1020-3, 1020-16

rural bicycle touring routes, 1020-2
shared roadway, 1020-2, 1020-4, 1020-17
shared use path, 1020-2, 1020-3, 1020-7, 1020-8, 1020-9, 1020-10, 1020-11, 1020-12
sidewalks, 1020-4
sight distance, 1020-14
signed shared roadway, 1020-2
signing, 1020-15
State Highway System Plan, 1020-2
storage facilities, 1020-7
structures, 1020-7, 1020-14
superelevation, 1020-13
traffic signals, 1020-11, 1020-17
tunnels, 1020-15
undercrossings, 1020-15
widths, 1020-8, 1020-15
Bicycle Policy Plan, 120-10
Bituminous surface treatment, 520-5
estimating, 520-5
Bollards, 1020-15
Borrow site. *See Sundry sites*
Boundaries, international, 1410-2
Brakemaster impact attenuator, 720-1, 720-6, 720-12
Bridge rails, 710-15
concrete safety shape, 710-15
pedestrian, 1025-8
project requirements, 710-2
thrie beam bridge rail retrofit criteria, 710-24
thrie beam retrofit, 710-16
Bridge site data, 1110-1
check list, 1110-5
stream crossings, 1110-2
Bridges, 1120-1
approach slab, 1120-3
design, 1120-1
end slopes, 640-9
existing structures, 1120-1
geotechnical investigation, 510-11
horizontal clearance, 1120-2
location, 1120-1
medians, 1120-2
new structures, 1120-1
pedestrian and bicycle facilities, 1120-3
protective screening for highway structures, 1120-4
rail end treatment, 1120-3
railroad, 1120-2
rails, 710-15
site design elements, 1120-1
slope protection, 1120-3
slope protection at watercrossings, 1120-4
structural capacity, 1120-1
vertical clearance, 1120-2
widths for structures, 1120-2
Bridle trail, 1020-1
Budgets, 120-15
Buffer strip, pedestrian, 1025-5
Buffer-separated HOV facility, 1050-1, 1050-3
Bulb out, 1025-1
Bus facilities, 1060-1
berths, 1060-7
disabled accessibility, 1060-12
grades, 1060-11
intersection, 1060-11
lane widths, 1060-11
passenger amenities, 1060-10
paving sections, 1060-10
transfer/transit centers, 1060-6
turning path template, 1060-23, 1060-24, 1060-35, 1060-36
vehicle characteristics, 1060-11
Bus stops and pullouts, 1060-7
designation and location, 1060-7
far-side, 1060-8
mid-block, 1060-9
near-side, 1060-8
placement, 1060-8
pullouts, 1060-9

C

Cable barrier, 710-11
locations on slopes, 710-23
Cantilever sign supports, 820-3
Capacity
analysis, 915-7
highway, 610-1
roundabouts, 915-7
CAT impact attenuator, 720-1, 720-6, 720-12
Cattle passes, R/W, 1410-2
CE, definition, 220-1
Central island, 915-11
Certification of documents, 330-4
Chain link
fencing, 1460-2
gates, 1460-3
Chain-off areas, 1010-5
Chain-up areas, 1010-5

Channelization, 910-6
curbing, 910-9
devices, 810-11
islands, 910-9
left-turn lanes, 910-6
right-turn lanes, 910-8
speed change lanes, 910-8
Checklist, environmental
Class II and III, 220-3, 220-10
definition, 220-1
Circulating roadway, 915-9
City streets, 440-3
Classification
functional, 440-2
terrain, 440-3
Clear zone, 700-2
definition, 700-1
Design Clear Zone, 700-2
distance table, 700-8
ditch section examples, 700-12
ditch sections, 700-2
inventory form, 700-9
recovery area, 700-2
recovery area example, 700-11
roundabouts, 915-12
Clearance
airport-highway, 240-4, 630-3
bikeway, 1020-8
Climbing lanes, 1010-2
Closed circuit television cameras (CCTV), 860-1
Cloverleaf, 940-3
Coast Guard, U.S. (USCG), 240-3, 1110-3
permit, 1110-3
Collector, 440-1, 440-14
Collector distributor roads, 940-8
Combined hearings, 210-15
Commercial approaches, 920-3
Communication towers
geotechnical investigation, 510-7
Comprehensive plans, 120-4, 120-5
Concrete barrier, 710-12
concrete barrier terminals, 710-14
shapes, 710-12
Concurrent flow HOV lane, 1050-1, 1050-3, 1050-7
Condemnations, 1410-5
Cones, 810-11
Conflict, 910-1
Conforming road approach, 920-1
Construction permits, 1410-3
Contour grading, 1310-1
Contraflow HOV lane, 1050-1
Control monuments, 1450-2
Controllers, signal, 850-8
Corner clearance, 920-1, 920-3
Corridor hearing, 210-11
Corridor Management Plan (CMP), 120-11
Corridor or project analysis, 325-1, 330-3
sample, 330-12, 330-13
County roads, 440-3
Crash cushion. *See Impact attenuator*
Critical slope, 700-1
Cross sections
interchange ramp, 940-5
roadways, 640-2
rock cuts, 640-7
side slopes, 640-7
stepped slopes, 640-9
Cross slope, 430-2, 640-4
roadways, 640-2
shoulders, 640-4
traveled way, 640-2
Crossovers, median, 960-1
Crossroads, 910-1, 910-3
ramp terminal intersections, 940-9
Crosswalks, 850-8, 1025-1
marked, 1025-6
unmarked, 1025-6
Crown slope for divided roadways, 640-10
Cul-de-sacs, 1420-7
Culvert ends, 700-4
Curb cuts, 1020-12
shared use path, 1020-12
Curbs, 440-6, 910-9
Current Law Budget (CLB), 120-15
Curves
horizontal, 620-2
superelevation, 640-4
vertical, 630-2
Cut slopes, 640-10, 640-11, 640-12, 640-14, 700-3

D

Datums, surveying, 1440-2
DDS. *See Design Decision Summary*
DE. *See Design exception*
Deceleration lane, 910-8, 940-7
Decision sight distance, 650-4
DEIS, definition, 220-2

Delineation, 830-1
guide posts, 830-4
pavement markings, 830-1
traffic barriers, 830-5
wildlife warning reflectors, 830-5
Department of Defense (DOD), 1120-3
Design
approval level, 330-7
hearing, 210-12
level, 325-4
speed, 430-1, 440-1, 440-3, 940-4
variance, 325-4
variance inventory, 330-3
vehicle, 430-3, 910-4
Design Clear Zone, 700-2
definition, 700-1
distance table, 700-8
ditch section examples, 700-12
ditch sections, 700-2
roundabouts, 915-12
Design considerations for intersections at grade, 910-3
configurations, 910-3
crossroads, 910-3
spacing, 910-4
traffic analysis, 910-3
Design Decisions Summary (DDS), 330-2
Design documentation, approval, and process review, 330-1
design approval, 330-5
design documentation, 330-3
process review, 330-5
project definition phase, 330-2
project development, 330-2
purpose, 330-1
Design Exception (DE), 325-4
Design matrix procedures, 325-1
procedures, 325-3
project type, 325-4
selecting a design matrix, 325-3
terminology, 325-1
using a design matrix, 325-4
Designated state highways map, 120-11
Developer initiated intersections, 910-13
Deviation, 325-5, 330-4, 340-1
documentation, 330-4
documentation content list, 330-14
Diamond interchange, 940-3
Direct access HOV ramp, 1050-1, 1050-5. *See HOV Direct Access Design Guide, Draft M 22-98*
Directional interchange, 940-3
Disabled access, transit, 1060-12
Discipline Report, 220-1
Distribution facilities, 620-2
Ditch inslopes, 430-3
DMS, definition, 860-4
DNS, definition, 220-1
Documentation. *See the last heading of most chapters*
design, 330-1
environmental, 220-1
Draft Environmental Impact Statement (DEIS), 220-2
Drainage, 1210-1
Drainage ditches in embankment areas, 640-9
Drop lanes, 910-8
Drums, 810-11
Dynamic message signs (DMS), 860-4

E

EA, definition, 220-1
Easements, 1420-7
perpetual, 1410-3
right of way, 1410-2
temporary, 1410-3
Ecology, Department of, 240-6
ECS, definition, 220-1
EIS, definition, 220-2
Elevators, 1025-9
Emergency escape ramps, 1010-4
Emergency vehicle preemption, 850-11
Endangered species, 210-7, 220-7, 220-8, 220-10, 240-2, 240-11
Enhanced enforcement, 810-8
Environmental documents
APD report, 1425-9
geotechnical report, 510-5
project, 220-1
Environmental hearing, 210-11
Environmental Impact Statement (EIS) 220-2
Environmental Protection Agency, 240-5
Environmental Review Summary (ERS), 330-2
Erosion prevention, 1350-2
ERS. *See Environmental Review Summary*
Escape ramps, 1010-4
Evaluate Upgrade (EU), 325-5, 330-4
documentation, 330-4
documentation content list, 330-14

F

Farmlands, 210-7, 220-5, 220-10, 220-11, 240-11
Federal agencies, 240-1
Federal aid
    environmental categories, 220-2
    landscape projects, 1320-4
    R/W documents, 1410-6
Federal Aviation Administration (FAA), 240-4
Federal Energy Regulatory Commission (FERC), 240-5
Federal lands
    R/W transactions, 1410-4
FEIS, definition, 220-2
Fencing, 1460-1
    chain link, 1460-2
    design criteria, 1460-1
    documentation, 1460-3
    fencing types, 1460-2
    gates, 1460-3
    limited access highways, 1460-1
    managed access highways, 1460-2
    procedure, 1460-3
    special sites, 1460-2
    wire fencing, 1460-2
Ferry System Plan, 120-13
FHWA - WFLHD, 240-4
Filing requirements, monuments, 1450-3
Fill slopes, 430-3, 640-10, 640-11, 640-12, 640-14, 700-3
Findings
    engineering and operational acceptability, 1425-4
Findings and order, 210-14
    plan, 220-13, 1430-2
Fish and Wildlife, Department of, 240-6
Fixed objects, 700-3
Flood plains, 210-7, 220-5, 220-7, 220-8, 220-10, 220-11, 1210-1
Flyer stops, 1050-5
FONSI, definition, 220-2
Forest Service, U.S. (USFS), 240-3
Freeway lighting applications, 840-11
Freight and Goods Transportation System (FGTS), 120-7
Freight Rail Plan, 120-9
Frontage roads, 620-3, 1420-7
Full design level, 440-1
    city streets and county roads, 440-3
    curbs, 440-6
    design speed, 440-3
    functional classification, 440-2
    geometric design data, 440-3
    grades, 440-7
    medians, 440-5
    parking, 440-6
    pavement type, 440-7
    shoulders, 440-4
    state highway system, 440-3
    state highways as city streets, 440-3
    structure width, 440-7
    terrain classification, 440-3
    traffic lanes, 440-4
Functional classification, 120-6, 440-1, 440-2
Funding. *See Programming*

G

G-R-E-A-T cz impact attenuator, 720-2, 720-12
G-R-E-A-T impact attenuator, 720-3, 720-9, 720-10
Gates, 1460-3
Geographic Information System (GIS), 1440-3
Geometric
    design data, 440-3
Geometric cross section, 640-1
    medians, 640-6
    minimum radius for normal crown section, 640-5
    outer separations, 640-6
    roadsides, 640-7
    roadways, 640-2
    shoulders, 640-4
    superelevation, 640-4
    traveled way cross slope, 640-2
    turning roadway widths, 640-2
Geometric plan elements, 620-1
    arrangement of lanes, 620-3
    distribution facilities, 620-2
    frontage roads, 620-3
    horizontal alignment, 620-1
    horizontal curve radii, 620-2
    lane transitions, 620-4
    median width transitions, 620-4
    number of lanes and arrangement, 620-3
    pavement transitions, 620-4
Geometric profile elements, 630-1
    airport clearance, 630-3
    alignment on structures, 630-2
    coordination of vertical and horizontal alignments, 630-2
    design controls, 630-1

grade length, 630-2
length of grade, 630-2
maximum grades, 630-2
minimum grades, 630-2
minimum length of vertical curves, 630-2
railroad crossings, 630-3
vertical alignment, 630-1
Geometrics
horizontal alignment, 620-1
vertical alignment, 630-1
Geosynthetics, 530-1
applications, 530-2, 530-16
definition, 530-2
design approach, 530-3
design process, 530-12
design responsibility, 530-11
ditch lining, 530-6
documentation, 530-11
erosion control, 530-5
function, 530-2
separation, 530-4
site-specific designs, 530-10
soil stabilization, 530-5
standard specification, 530-9
temporary silt, 530-20
temporary silt fence, 530-6
types, 530-14
types and characteristics, 530-1
underground drainage, 530-3
Geotechnical investigation, design, and reporting, 510-2
bridge foundations, 510-11
buildings, 510-7
cantilever signs, 510-7
communication towers, 510-7
consultants, 510-14
documentation, 510-14
earthwork, 510-4
ferries projects, 510-13
hydraulic structures, 510-5
key contacts, 510-2
luminaire, 510-7
noise walls, 510-8
park and ride lots, 510-7
permits, 510-3
reinforced slopes, 510-8
rest areas, 510-7
retaining walls, 510-8
rockslope, 510-10
sign bridges, 510-7
signals, 510-7
site data, 510-3
surfacing report, 510-14
unstable slopes, 510-9
Geotextiles
descriptions, 530-1
standard specification, 530-9
types, 530-15
Glare screens, 700-6, 700-16
Global Positioning System (GPS), 1440-2
Governmental agencies, 240-1
Grade intersections, 910-1
Grades, 430-2, 440-7
bikeway, 1020-6
change/city and town/adoption, 240-9
maximum, 440-9, 440-10, 440-12, 440-14, 630-2
minimum, 630-2
ramp, 940-4
roundabouts, 915-11
shared use path, 1020-14
vertical alignment, 630-2
Grading, contour, 1310-1
Guardrail
beam guardrail, 710-5
locations on slopes, 710-6
placement cases, 710-9
post installation, 710-20
steel backed timber guardrail, 710-14
terminals and anchors, 710-6
thrie beam, 710-5, 710-24
W-beam, 710-5
Guide posts, 830-4
placement, 830-7
Guide sign plan, 820-4

H

HAR, definition, 860-4
Hazard, 700-1, 700-2
definition, 700-1
fixed objects, 700-3
median considerations, 700-5
side slopes, 700-3
water, 700-5
Headlight glare, 700-6
Hearings, 210-6
access, 210-12, 1430-2
administrative appeal, 210-15
advertising, 210-7
combined, 210-15

corridor, 210-11
design, 210-12
environmental, 210-11, 220-7, 220-12
examiner, 210-13
findings and order, 210-14
formal, 210-4
informal, 210-4
notice, 210-7
open format, 210-4
preparation, 210-8
requirements, 210-6
sequence, 210-16
study plan, 210-3, 210-11
Heritage tour route
barrier, 710-4
designations, 120-11
Hex-Foam Sandwich impact attenuator, 720-3, 720-11
High accident corridor (HAC), 1025-2
High accident locations (HAL), 1025-2
High occupancy vehicle (HOV) facilities, 1050-1
arterial HOV, 1050-10
design criteria, 1050-7
direct access. *See HOV Direct Access Design Guide, Draft M 22-98*
enforcement, 1050-6
enforcement areas, 1050-9
hours of operation, 1050-6
lane termination, 1050-8
operational alternatives, 1050-3
planning elements, 1050-2
ramp meter bypass, 1050-8
SC&DI, 1050-6
signs and pavement markings, 1050-9
type, 1050-3
vehicle occupancy designation, 1050-5
Highway
airport clearance, 240-4
as city streets, 440-3
Highway Access Management Classification Reports, 120-7
Highway advisory radio (HAR), 860-4
Highway-highway separation, 1110-3
Highway-railroad separation, 1110-3
Highways and Local Programs Service Center, 120-10
Horizontal alignment, 620-1
Horizontal curve radii, 620-2
HOV facilities. *See High occupancy vehicle facilities*
Hydraulic considerations, 1210-1
channel changes, 1210-2
flood plain, 1210-1
roadway drainage, 1210-2
runoff, 1210-3
stream crossings, 1210-2
subsurface discharge, 1210-3
subsurface drainage, 1210-3
Hydraulic design, 1210-1
design responsibility, 1210-3
geotechnical investigation, 510-5
hydraulic considerations, 1210-1
safety considerations, 1210-3

I

IDT, 220-3
Illumination, 840-1
additional illumination, 840-3
bridges, 840-5
construction zones and detours, 840-4
design criteria, 840-5
illumination calculation example, 840-21
required illumination, 840-2
roundabouts, 915-13
Impact attenuator systems, 720-1
comparison, 720-12
design criteria, 720-3
documentation, 720-5
object markers, 830-5
older systems, 720-3, 720-10
permanent installations, 720-1, 720-6
selection, 720-4
sizes, 720-4
work zone installations, 720-2, 720-9
Inertial barrier, 720-2, 720-3, 720-8, 720-12
Inscribed Diameter, 915-9
Intelligent transportation systems (ITS), 860-1
closed circuit television cameras, 860-1
dynamic message signs, 860-4
highway advisory radio, 860-4
HOV bypass, 860-4
motorist information, 860-4
National ITS Architecture, 860-1
public information components, 860-4
surveillance, control, and driver information, 860-1
traffic data collection, 860-2
traffic flow control, 860-3
traffic operations center (TOC), 860-2

Traffic Systems Management Center (TSMC), 860-2
Venture Washington, 860-1
Interchanges, 940-1
collector distributor roads, 940-8
connections, 940-6, 940-8
design, 940-2
lane balance, 940-6
on two-lane highways, 940-9
patterns, 940-2
plans, 940-10
ramp design speed, 940-4
ramp grade, 940-4
ramp terminals, 910-12, 940-9
ramp widths, 940-5
ramps, 940-4
sight distance, 940-4, 940-6
spacing, 940-3
weaving sections, 940-8
International boundaries, R/W, 1410-2
Intersections at grade, 430-3, 910-1, 910-2
angle, 430-3
channelization, 910-6
configurations, 910-3
design considerations, 910-3
design vehicle, 430-3
documentation, 910-13
four leg intersection, 910-2
interchange ramp terminals, 910-12
island, 910-2, 910-9
leg, 910-2
median crossover, 910-2
plans, 910-13
right-turn corners, 910-5
roundabouts, 910-2, 910-10, 915-1
sight distance, 910-11
spacing, 910-4
tee (T) intersection, 910-2
traffic control, 910-12
transit, 1060-11
U-turns, 910-10
wye (Y) intersection, 910-2
Interstate, 440-2, 440-9
Irrigation, 1330-1
Islands, 910-2, 910-9
compound right-turn lane, 910-9
location, 910-9
roundabouts, 915-11
size and shape, 910-9
ITS, definition, 860-1

J

Joint use approach, 920-2

L

Labor and Industries, Department of (L&I), 240-9
Land corner record (form), 1450-7
Landscaping, 1300-2, 1320-1, 1330-1, 1350-1
Lane, 940-6
balance, 940-6
bike, 1020-1, 1020-4
drop, 910-8
number and arrangement, 620-3
reduction, 940-6
transitions, 620-4
width, 430-1, 440-4
Lane lines. *See Pavement markings*
Left-turn lanes, 910-6
one-way, 910-6
storage, 910-6
two-way, 910-7
Length of need, traffic barrier, 710-5
calculation, 710-19
definition, 710-1
on curves, 710-20
Level of Development Plan, 330-2
Licensed professionals, certification by, 330-4, 1450-2, 1450-3
Light standards, 840-7
geotechnical investigation, 510-7
LMA impact attenuator, 720-3, 720-11
Load rating, bridges, 1120-1
Local agency initiated intersections, 910-13
Longitudinal barrier. *See Traffic barrier*
Low clearance warning signs, 1120-3
Luminaire. *See Light standards*

M

Mailboxes, 700-4
location and turnout design, 700-14
Maintenance site. *See Sundry sites*
Manual on Uniform Traffic Control Devices (MUTCD), 820-1, 830-1, 850-1, 860-2, 1025-1, 1120-3
Maps. *See also Plans*
monumentation, 1450-3
Marked crosswalks, 1025-6
Mast arm signal standards, 850-14
Master Plan for Limited Access Highways, 120-7, 330-2

Materials sources, 510-1, 510-16
Matrix. *See Design matrix procedures*
Median, 440-5, 640-6
design, 640-6
safety considerations, 700-5
transitions, 620-4
warrants for median barrier, 700-15
width, 440-5
Median barrier, 700-5
Median crossovers, 960-1
analysis, 960-1
approval, 960-2
design, 960-1
Memorandum of Agreement
Advisory Council, SHPO, and FHWA, 220-7
Historic Preservation, 220-9
Memorandum of Understanding
Conservation Commission, 220-6
Fish and Wildlife, 240-6
Highways Over National Forest Lands, 240-3
USCG and FHWA, 240-3
WSP, 1040-2
Metropolitan Planning Organizations (MPO), 120-3
Metropolitan Transportation Improvement Program (MTIP), 120-4, 120-14
Midblock pedestrian crossing, 1025-1
Mileposts
markers, 820-4
sign, 820-4
Military Traffic Management Command Transportation Engineering Agency (MTMCTEA), 1120-3
Minor arterial, 440-2, 440-12
Minor operational enhancement projects, 340-1
matrix procedures, 340-3
project approval, 340-5
project type, 340-4
project types, 340-2
selecting a matrix, 340-4
using a matrix, 340-4
Minor safety and minor preservation work, 410-1
Modified design level, 430-1
bridges, 430-3
cross slope, 430-2
design speed, 430-1
fill slopes and ditch inslopes, 430-3
intersections, 430-3
profile grades, 430-2
ramp lane widths, 430-1
roadway widths, 430-1
stopping sight distance, 430-2
Monotube cantilever sign supports, 820-3
Monotube sign bridges, 820-3
Monument Database, WSDOT, 1440-2
Monumentation, 1450-1
alignment monuments, 1450-2
control monuments, 1450-2
DNR permit, 1450-3
filing requirements, 1450-3
land corner record, 1450-3
monumentation map, 1450-3
other monuments, 1450-3
property corners, 1450-3
Mopeds, 1020-1
Motorist information, 860-4
additional public information components, 860-4
dynamic message signs, 860-4
highway advisory radio, 860-4
Mountable curbs, 440-6
Moveable barriers, 810-10
MTMCTEA, 1120-3
MUTCD, 820-1, 830-1, 850-1, 860-2, 1025-1

N

N-E-A-T impact attenuator, 720-2, 720-9, 720-12
National Highway System (NHS), 325-6, 325-7, 440-2
National ITS Architecture, 860-1
Natural Resources, Department of, 240-8
Navigable waters, 240-3
NEPA, definition, 220-1
New Jersey shape barrier, 710-13
Noise barriers, 1140-1
design, 1140-1
documentation, 1140-4
earth berm, 1140-2
geotechnical investigation, 510-8
noise wall, 1140-2
procedures, 1140-3
wall types, 1140-3
Noncommercial approaches, 920-3
Nonconforming road approach, 920-2
Nonrecoverable slope, 700-1
Notional live load, 1120-1

O

Object markers, 830-5
Occupancy designation for HOV facilities, 1050-2, 1050-5
Office of Urban Mobility, 120-12
One-way left-turn geometrics, 910-7
Open house meetings, 210-4
Outer separations, 640-2, 640-6
Overhead sign installations, 820-3

P

PAL, 1025-2
Park and ride lots, 1060-1
    access, 1060-3
    bicycle facilities, 1060-5
    design, 1060-2
    drainage, 1060-5
    fencing, 1060-6
    geotechnical investigation, 510-7
    illumination, 1060-5
    internal circulation, 1060-3
    landscape, 1060-6
    maintenance, 1060-6
    motorcycle facilities, 1060-5
    pavement design, 1060-5
    pedestrian movement, 1060-4
    shelters, 1060-5
    site selection, 1060-2
    stall size, 1060-4
    traffic control, 1060-5
Parking, 440-6
    roundabouts, 915-13
Partial cloverleaf, 940-3
Passing lanes, 1010-2
Passing sight distance, 650-1
    horizontal curves, 650-2
    no passing zone markings, 650-2
    vertical curves, 650-2
Path, bicycle. *See Shared use path*
Pavement
    transitions, 620-4
    widening, 620-4
Pavement markings
    longitudinal, 830-1
    materials, 830-6
    roundabouts, 915-12
    transverse, 830-2
Pavement structure, 520-1
    asphalt concrete pavement, 520-3
    base and surfacing quantities, 520-7
    bituminous surface treatment, 520-5
    estimating tables, 520-1
    typical section, 520-6
PCMS, 810-10
PD. *See Project Definition*
Pedestrian accident locations (PAL), 1025-2
Pedestrian bridge, 1120-2
Pedestrian connectivity, 1025-3
Pedestrian crossings at-grade, 1025-6
Pedestrian design considerations, 1025-1
    activity generators, 1025-4
    bulb out, 1025-1
    cross slope, 1025-6
    crosswalk, 1025-1
    diagonal ramps, 1025-7
    facilities, 1025-1, 1025-4
    funding programs, 1025-2
    grade, 1025-6
    grade separations, 1025-8
    human factors, 1025-3
    illumination and signing, 1025-9
    landing, 1025-1
    midblock pedestrian crossing, 1025-1
    policy, 1025-2
    raised median, 1025-2
    refuge island, 1025-2
    roundabouts, 915-12
    shared use paths, 1025-5
    shoulders, 1025-5
    sidewalk ramps, 1025-7
    sidewalks, 1025-5
    transit stops, 1025-9
    walking and hiking trails, 1025-5
    walking rates, 1025-3
Pedestrian Policy Plan, 120-10
Pedestrian risk projects, 1025-2
Pedestrian-friendly, 1025-1
Permits
    construction, 1410-3
    geotechnical permits, 510-3
    governmental agencies, 240-1
    remove/destroy monument, 1450-5
    right of way, 1410-2
    traffic signal, 850-2
Photogrammetry, 1440-3
Physical barriers, 810-9
Pit sites, R/W, 1410-2
Planning, 120-1
    definitions, 120-2
    legislation and policy development, 120-2

linking transportation plans, 120-13
planning and programming, 120-16
planning at WSDOT, 120-7
planning to programming, 120-15
references, 120-1
Plans
access hearing, 210-13, 1410-6, 1430-2
access report, 1430-1
environmental study, 210-3, 220-2, 220-3, 220-4
findings and order, 220-13, 1430-2
guide sign, 820-4
interchange, 940-10
intersection, 910-13
limited access, 1410-2
limited access, modifications to, 1420-8
PS&E, R/W, 1410-4
public involvement, 210-3, 220-2
right of way, 1410-1, 1410-3, 1410-4
Water Pollution Control (WPCP), 240-7
Pollution control, 240-6
Portable changeable message signs, 810-10
Portable traffic signals, 810-12
Preliminary signal plan, 850-14
Principal arterial, 440-2, 440-10
Private land
R/W transactions, 1410-4
Profile grades, 440-7
Program Management Office, 120-15
Programming
R/W appraisal and acquisition, 1410-6
R/W funding, 1410-4
Project analysis, 325-1, 330-3
sample, 330-12, 330-13
Project definition phase, 330-2
Design Decisions Summary (DDS), 330-2
Environmental Review Summary (ERS), 330-2
Project Definition (PD), 330-3
project summary, 330-2
Property corners, 1450-3
Proprietary items
impact attenuators, 720-5
Protective screening for highway structures, 1025-8, 1120-4
Public information, 810-1
Public Involvement Plan, 220-2
Public Transportation and Intercity Rail Passenger Plan for Washington State, 120-8
Public Transportation and Rail Division, 120-8

Q

Q Program, 340-1
QuadGuard cz impact attenuator, 720-2
QuadGuard Elite impact attenuator, 720-1, 720-7, 720-12
QuadGuard impact attenuator, 720-1, 720-7, 720-12
QuadTrend - 350 impact attenuator, 720-1, 720-6, 720-12
Quarry site. *See Sundry sites*

R

Railroad
approaches, access control, 1420-6
crossings, 630-3
preemption, 850-7, 850-11
R/W transactions, 1410-4
Ramp, 940-4
cross section, 940-5
design speed, 940-4
grade, 940-5
HOV ramp meter bypass, 1050-8
lane increases, 940-5
lane widths, 430-1, 940-5
meters, 940-5
sight distance, 940-4
terminals, 910-12
REACT 350 impact attenuator, 720-2, 720-8, 720-12
Recoverable slope, 700-1
Recovery area, 700-2
Redirectional land forms, 710-15
Regional Transportation Improvement Program (RTIP), 120-14
Regional Transportation Planning Organizations (RTPO), 120-4, 120-6
Reinforced slopes, 1130-1
geotechnical investigation, 510-8
Regulatory traffic control strategies, 810-8
Reports
access, 1430-1
discipline, 220-5
Required safety items of work, 410-1
Rest areas, 1030-1
geotechnical investigation, 510-7
Retaining walls, 1130-1
classifications, 1130-1
design principles, 1130-2
design requirements, 1130-2
design responsibility and process, 1130-9

geotechnical investigation, 510-8
selection, 1130-5
Revegetation, 1300-2, 1320-1
Reviews and approvals
design, 330-9, 330-10
PS&E Process, 330-11
Right of way, 1410-1
appraisal and acquisition, 1410-4
easements and permits, 1410-2
multiple use, 1420-7
plans, 1410-1
programming for funds, 1410-4
special features, 1410-2
transactions, 1410-4
Right-turn at intersections, 910-5
corners, 910-5
lanes, 910-8
pocket and taper, 910-8
Road approaches, 920-1, 1420-1
commercial, 920-3
connection category, 920-2
corner clearance, 920-3
design considerations, 920-2
design template, 920-2
drainage requirements, 920-4
noncommercial, 920-3
right of way, 1410-2
sight distance, 920-3
spacing, 920-3
type, 920-3
Road closures, 810-5
Roadside Classification Plan, 1300-2
Roadside development, 1300-1
documentation, 1300-2
recommendations, 1300-3
requirements, 1300-2
Roadside Classification Plan, 1300-2
Roadside Manual, 1300-2
Roadside safety, 700-1
clear zone, 700-2
definitions, 700-1
documentation, 700-7
fixed objects, 700-3
guidelines for embankment barrier, 700-13
hazard, 700-2
headlight glare, 700-6
median considerations, 700-5
rumble strips, 700-5
side slopes, 700-3
warrants for median barrier, 700-15
water, 700-5
Roadsides, 640-7
bridge end slopes, 640-9
drainage ditches in embankment areas, 640-9
roadway sections in rock cuts, 640-7
side slopes, 640-7
stepped slopes, 640-9
Roadway lighting applications, 840-13
Roadways, 640-2
shoulders, 640-4
traveled way cross slope, 640-2
turning roadway widths, 640-2
widths, HOV facilities, 1050-7
Rock cuts, 640-7
geotechnical investigation, 510-10
Rock, investigation, 510-1
ROD, definition, 220-2
Roundabouts, 910-2, 910-10, 915-1.
access, 915-13
bicycles, 915-12
capacity analysis, 915-7
capacity roundabouts, 915-7
categories, 915-5
circulating roadway, 915-9
deflection, 915-8
design clear zone, 915-12
design speed, 915-8
elements, 915-3
entry, 915-9
exit, 915-10
geometric design, 915-7
grades, 915-11
illumination, 915-13
inscribed diameter, 915-9
islands, 915-11
locations not normally recommended, 915-1
locations not recommended, 915-2
parking, 915-13
pavement marking, 915-12
pedestrians, 915-12
recommended locations, 915-1
sight distance, 915-10
signing, 915-12
superelevation, 915-11
transit facilities, 915-13
Route, bicycle, 1020-1, 1020-17
Route continuity, 940-4
Route Development Plans, 120-11, 330-2
Rumble strips, 700-5
Runoff, 1210-3

S

Safety, basic, 410-1
Safety rest areas, 1030-1
SC&DI, 860-1
Scale sites, 1040-1
Scenic byway, 120-11
    barrier, 710-4
School walk route, 1025-7
Scoping, 220-3
Screening, 810-12
Section 4(f), 220-6, 220-9, 220-10, 220-11
    definition, 220-2
    lands, 210-7, 220-7, 220-8, 240-4
Semidirectional interchange, 940-3
Sentre impact attenuator, 720-3, 720-10
SEPA, definition, 220-1
Separated HOV facilities, 1050-2, 1050-7
Shared roadway, 1020-4, 1020-17
Shared use paths, 1020-2, 1025-5
Shoreline Development Permit, 240-9
Shoulders
    cross slope, 640-4
    driving for slow vehicles, 1010-3
    functions, 440-4
    islands, 910-9
    slope, 640-4
    turnouts, 1010-3
    width, 430-1, 440-4
    width for curb, 440-6
Shy distance, 710-4
    definition, 710-1
    structure, 440-7
Side slopes, 700-3
Sidewalk ramps, 1025-7
Sidewalks, 1020-4, 1025-5
Sight distance, 650-1, 940-4
    bicycle, 1020-14
    decision, 650-4
    intersections, 910-11
    passing, 650-1
    road approaches, 920-3
    roundabouts, 915-10
    stopping, 650-2
Sight triangle, 910-11
Signal
    geotechnical investigation, 510-7
    intersection warning sign, 850-13
    phasing, 850-4
    supports, 850-13
    warrants, 850-4
Signed shared roadway. *See Bike route*
Signing, 820-1
    bikeways, 1020-15, 1020-17
    bridges, 820-3
    cantilever sign structures, 820-3
    design components, 820-2
    foundations, 820-3
    geotechnical investigation, 510-7
    ground mounted signs, 820-3
    guide sign plan, 820-4
    heights, 820-2
    horizontal placement, 820-4
    illumination, 820-3
    lateral clearance, 820-2
    lighting fixtures, 820-3
    location, 820-2
    longitudinal placement, 820-2
    mileposts, 820-4
    overhead installation, 820-3
    posts, 820-3
    roundabouts, 915-12
    service walkways, 820-4
    structure mounted sign mountings, 820-3
    vertical clearance, 820-4
Silt fence, 530-6
Single point (urban) interchange, 940-3
Single slope barrier, 710-13
Site data for structures, 1110-1
    additional data for grade separations, 1110-3
    additional data for waterway crossings, 1110-2
    additional data for widenings, 1110-4
    CAD files and supplemental drawings, 1110-1
    highway-highway separation, 1110-3
    highway-railroad separation, 1110-3
    required data for all structures, 1110-1
Slope
    bridge end, 640-9
    geotechnical investigation, 510-8
    protection, 1120-3
    protection at watercrossings, 1120-4
    roadways, 640-2
    rock cuts, 640-7
    shoulders, 640-4
    side slopes, 640-7
    stabilization, 1350-2
    stepped, 640-9
    traveled way, 640-2

Slow moving vehicle
turnouts, 1010-3
Soil bioengineering, 1350-1
design responsibilities and considerations, 1350-3
streambank stabilization, 1350-2
upland slope stabilization, 1350-2
Soils, 510-1
investigation, 510-1
Spacing
interchanges, 940-3
intersections, 910-4
road approaches, 920-3
Span wire, 850-14
Special permits and approvals, 240-1
Speed change lanes, 910-8, 940-7
Speed, design, 440-3, 940-4
Splitter Island, 915-11
Stairways, 1025-9
State Commute Trip Reduction Program, 120-8
State Highway System Plan, 120-5, 120-10, 120-11, 330-2
rural bicycle touring routes, 1020-2
urban bicycle projects, 1020-2
State highways as city streets, 440-3
Statewide Transportation Improvement Program (STIP), 120-5, 120-14
Steel backed timber guardrail, 710-14
Stepped slopes, 640-9
Stockpiles, R/W, 1410-2
Stone guardwalls, 710-15
Stopping sight distance, 430-2, 650-2
crest vertical curves, 650-3
effects of grade, 650-3
existing, 650-3
horizontal curves, 430-2, 650-4
sag vertical curves, 650-4
vertical curves, 430-2
Storage length, left-turn lane, 910-6
Strain poles
steel, 850-14
timber, 850-14
Streambank stabilization, 1350-2
Striping. *See Pavement markings*
Structural capacity, 1120-1
Structure width, 440-7
Structures. *See Bridges*
Study plan
environmental, 220-2, 220-3, 220-4
value engineering, 315-2
Sundry sites
public lands, 240-8
right of way, 1410-2
source of materials, 510-1
Superelevation, 640-4
existing curves, 640-5
intersections, 640-5, 640-27
rates, 640-4, 640-24, 640-25, 640-26
roundabouts, 915-11
runoff for highway curves, 640-5
runoff for ramp curves, 640-6
shared use path, 1020-13
Supplement bridge site data, 1110-3
Surface Transportation Program, 120-7
Surfacing materials, 510-1
base and surfacing quantities, 520-7
investigation, 510-1
pavement structure, 520-1
surfacing report, 510-14
Surveying and mapping, 1440-1
after construction is completed, 1440-2
datums, 1440-2
during design and development of the PS&E, 1440-1
during the project definition phase, 1440-1
geographic information system (GIS), 1440-3
global positioning system (GPS), 1440-2
photogrammetric surveys, 1440-3
procedures, 1440-1
WSDOT monument database, 1440-2

T

Taper, See Lane transitions, 620-4
TDM Strategic Plan, 120-9
Temporary concrete barriers, 810-10
Temporary pavement markings, 810-12
Temporary road approach, 920-2
Terrain classification, 440-3
Textured crosswalks, 1025-6
Thrie beam. *See Guardrail*
TMA, 810-10
Traffic
data collection, 860-2
islands, 910-9
lanes, 440-4
operations center (TOC), 860-2
signal design, 850-4
signal permit, 850-2

Traffic analysis
intersections, 910-3
Traffic barrier. *See Barrier, traffic*
Traffic control, 810-1
channelization, 910-6
intersections, 910-12
plan, 810-9
Traffic control signals, 850-1
control equipment, 850-8
crosswalks and pedestrians, 850-8
detection systems, 850-10
electrical design, 850-15
foundation design, 850-14
funding, construction, maintenance, & operation, 850-3
intersection design considerations, 850-7
preemption systems, 850-11
preliminary signal plan, 850-14
signal displays, 850-12
signal phasing, 850-4
signal supports, 850-13
signal warrants, 850-4
strain poles, 850-14
third party agreement signals, 850-3
Traffic flow control, 860-3
HOV bypass, 860-4
ramp meters, 860-3
Traffic interchanges, 940-1
collector distributor roads, 940-8
connections, 940-6, 940-8
design, 940-2
lane balance, 940-6
on two-lane highways, 940-9
patterns, 940-2
plans, 940-10
ramp design speed, 940-4
ramp grade, 940-4
ramp terminal intersections, 940-9
ramp widths, 940-5
ramps, 940-4
sight distance, 940-4, 940-6
spacing, 940-3
weaving sections, 940-8
Traffic Systems Management Center (TSMC), 860-2
Transit benefit facilities, 1060-1
bus stops and pullouts, 1060-7
disabled accessibility, 1060-12
flyer stops, 1050-5
grades, 1060-11
intersection, 1060-11
lane widths, 1060-11
park and ride lots, 1060-1
passenger amenities, 1060-10
paving sections, 1060-10
priority preemption, 850-11
roundabouts, 915-13
transfer/transit centers, 1060-6
vehicle characteristics, 1060-11
Transitions and connections, traffic barrier, 710-8
Transitions, pavement, 620-4
Transportation Demand Management Office, 120-9
Transportation Facilities and Services of Statewide Significance, 120-6
Travel Demand Management Program (TDM), 120-12
Traveled way, 440-2, 640-2
Traveled way cross slope, 640-2
Traveler services, 1030-1
Trees, 700-4
TREND impact attenuator, 720-3, 720-10
Truck
climbing lanes, 1010-2
escape ramps, 1010-4
weigh sites, 1040-1
Truck-mounted attenuator (TMA), 720-3, 810-10
Tubular markers, 810-11
Turnbacks, 1420-7
Turning path template, 910-14, 910-15, 910-16, 1060-23, 1060-24, 1060-35, 1060-36
Turning roadway widths, 640-2
HOV facilities, 1050-7
Turnouts, 1010-3
Two-way left-turn lanes, 910-7

U

U-turns, 910-10
U.S. Coast Guard, 240-3, 1110-3
Unmarked crosswalk, 1025-6
Utilities
agreements, 240-10
R/W transactions, 1410-4

V

Value Engineering (VE), 315-1
implementation phase, 315-3
job plan, 315-5
procedure, 315-1
selection phase, 315-1
team tools, 315-7

Vegetation, 1320-1
Vehicle turning path template, 910-14, 910-15, 910-16, 1060-23, 1060-24, 1060-35, 1060-36
Venture Washington, 860-1
Vertical alignment, 630-1
    design controls, 630-1
    length of grade, 630-2
    maximum grades, 630-2
    minimum grades, 630-2
    minimum length of vertical curves, 630-2
    structures, 630-2
Vertical clearance
    new bridge, railroad, 1120-2
    new bridge, roadway, 1120-2
    pedestrian bridge, 1120-2
    structures, 1120-2

W

W-beam guardrail. *See Guardrail*
Walking and hiking trails, 1025-5
Walls
    geotechnical investigation, 510-8
    noise, 1140-2
    retaining, 1130-1
Warrants, 850-4, 1010-2
Washington State Patrol
    median crossovers, 960-2
    weigh sites, 1040-1
Washington's Transportation Plan (WTP), 120-4, 120-8
Waste Sites, R/W, 1410-2
Watchable Wildlife Program, 120-12
Water-filled barriers, 810-9
Water, hazard, 700-5
Water quality, 240-6
Weaving sections, 940-8
Weigh sites, 1040-1
    federal participation, 1040-4
    permanent facilities, 1040-2
    planning, development, and responsibilities, 1040-1
    portable facilities, 1040-3
    shoulder sites, 1040-4
Wetlands, 210-7, 220-5, 220-7, 220-8, 220-10, 220-11, 240-1, 1210-2
Wheelchair, 1025-4
Wide QuadGuard impact attenuator, 720-7
Wide REACT 350 impact attenuator, 720-8, 720-12
Widening
    pavement, 620-4
Width
    bridge, 440-7
    HOV facilities, 1050-7
    lane, 430-1, 440-4
    shoulder, 430-1, 440-4
Wildlife, Department of, 240-6
Wildlife warning reflectors, 830-5
Wire fencing, 1460-2
Work zone traffic control, 810-1
    documentation, 330-4
    intermediate-term stationary work zones, 810-2
    long-term stationary work zones, 810-2
    mobile work zones, 810-2
    short-duration work zones, 810-2
    short-term stationary work zones, 810-2
Work zone safety, 810-6
    flaggers, 810-7
    road users, 810-7
    workers, 810-6
Work zone traffic control, 810-1
Work zone types, 810-3
    crossover, 810-3
    detour, 810-3
    intermittent closure, 810-3
    lane closure, 810-3
    lane constriction, 810-3
    median use, 810-3
    multiple lane separation, 810-3
    shared right of way, 810-3
    shoulder use, 810-3
    temporary bypass, 810-3

Z

Zones, transition
    shared use path, 1020-12