REV. #	DESCRIPTION	DATE	CHKD
4	CONVERTED TO CAD	12/01/03	RSG

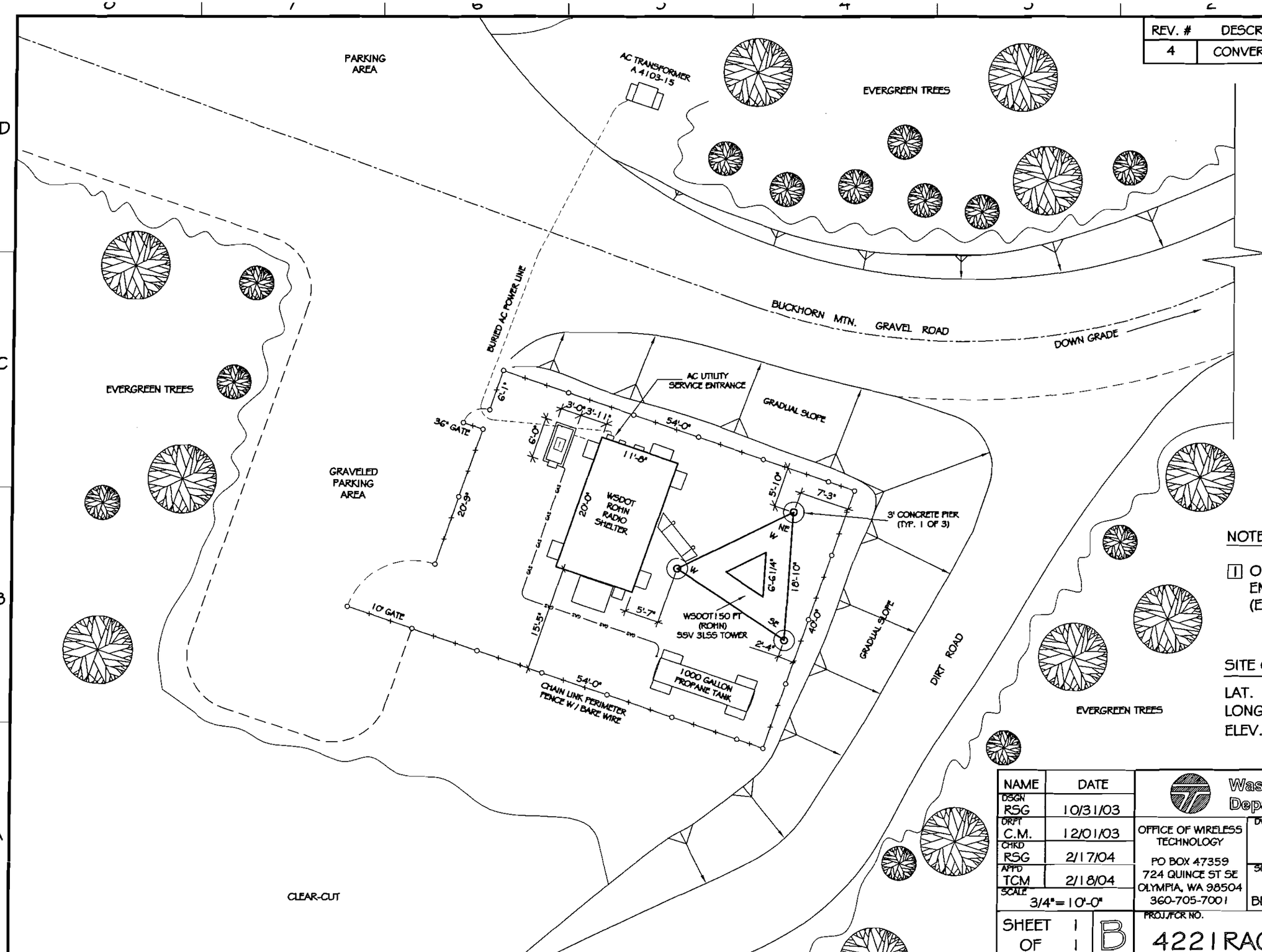

NOTES:

1. ONAN 16 KW PROPANE EMERGENCY GENERATOR (EG) W 28", L 58-1/2", H37".

SITE COORDINATES (NAD 83) :

LAT. 46° 31' 52.4" N
LONG. 122° 59' 50.4" W
ELEV. 1020 FT AMSL

NAME	DATE
DSGN RSG	10/31/03
DRFT C.M.	12/01/03
CHKD RSG	2/17/04
APPD TCM	2/18/04
SCALE 3/4"=10'-0"	

Washington State Department of Transportation

OFFICE OF WIRELESS TECHNOLOGY
PO BOX 47359
724 QUINCE ST SE
OLYMPIA, WA 98504
360-705-7001

DWG TITLE: SITE PLAN

SITE NAME: RADIO FACILITY
BUCKHORN MTN. WA

SHEET 1 OF 1 | B

PROJ./FCR NO.: 4221RA00-

DWG NO.: SP-1

REV. #	DESCRIPTION	DATE	CHKD
0	ORIGINAL-ISSUE	12/ /92	RSG
1	CONVERTED TO CAD	11/06/03	RSG

			151'
10 FT	7N13	7B	140'
20 FT	7N63	7A	120'
20 FT	8N66	8	100'
20 FT	9N6	9	80'
20 FT	10N7	10	
20 FT	11N65	11	40'
20 FT	12N26	12	20'
20 FT	13N41	13	0'

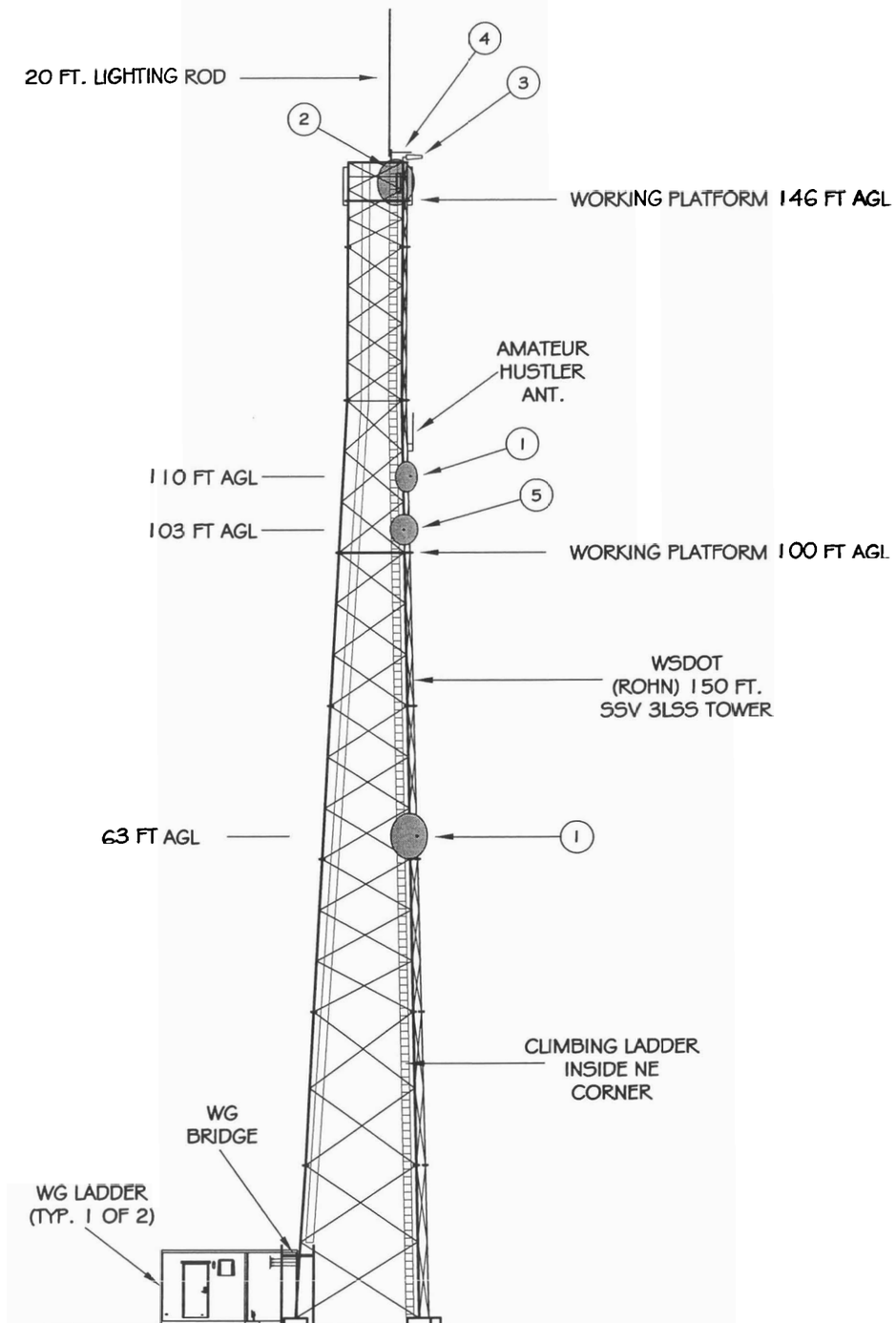

ELEVATION VIEW

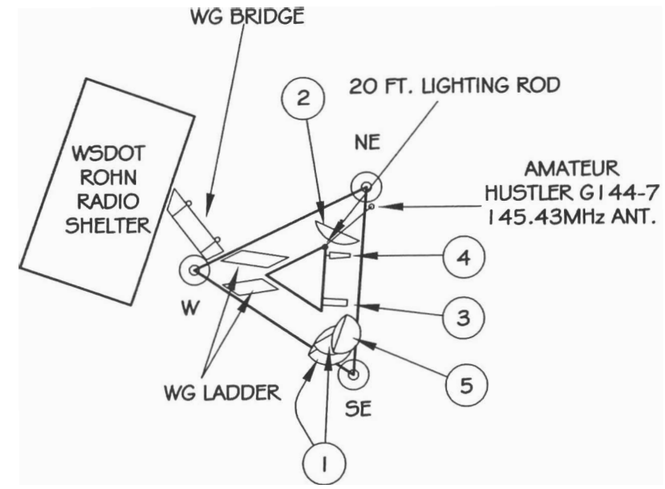

PLAN VIEW

NOTE:

1. FOR NUMERAL CLARIFICATION AND DESCRIPTION, SEE DWG: 4221RA01-ANT-1, 3 OF 3
2. BOTTOM SPREAD OF TOWER: 18' - 10"
   TOP SPREAD OF TOWER: 6'- 6 1/4"

NAME	DATE
DSGN RSG	11/06/03
DRFT C.M.	01/14/04
CHKD RSG	2/18/04
APPD TCM	2/18/04
SCALE N.T.S.	

Washington State Department of Transportation

OFFICE OF WIRELESS TECHNOLOGY
PO BOX 47359
724 QUINCE ST SE
OLYMPIA, WA 98504
360-705-7001

DWG TITLE: TOWER & ANTENNA ELEVATIONS

SITE NAME: RADIO FACILITY
BUCKHORN MTN. WA

SHEET 1 OF 3 — B

PROJ./FCR NO.: 4221RA01-

DWG NO.: ANT-1

REV. #	DESCRIPTION	DATE	CHKD
0	ORIGINAL-ISSUE	12/16/03	RSG
1	UPDATED TABLE FOR 2ND TOWER UPGRADE STRESS ANALYSIS	02/08/05	RSG

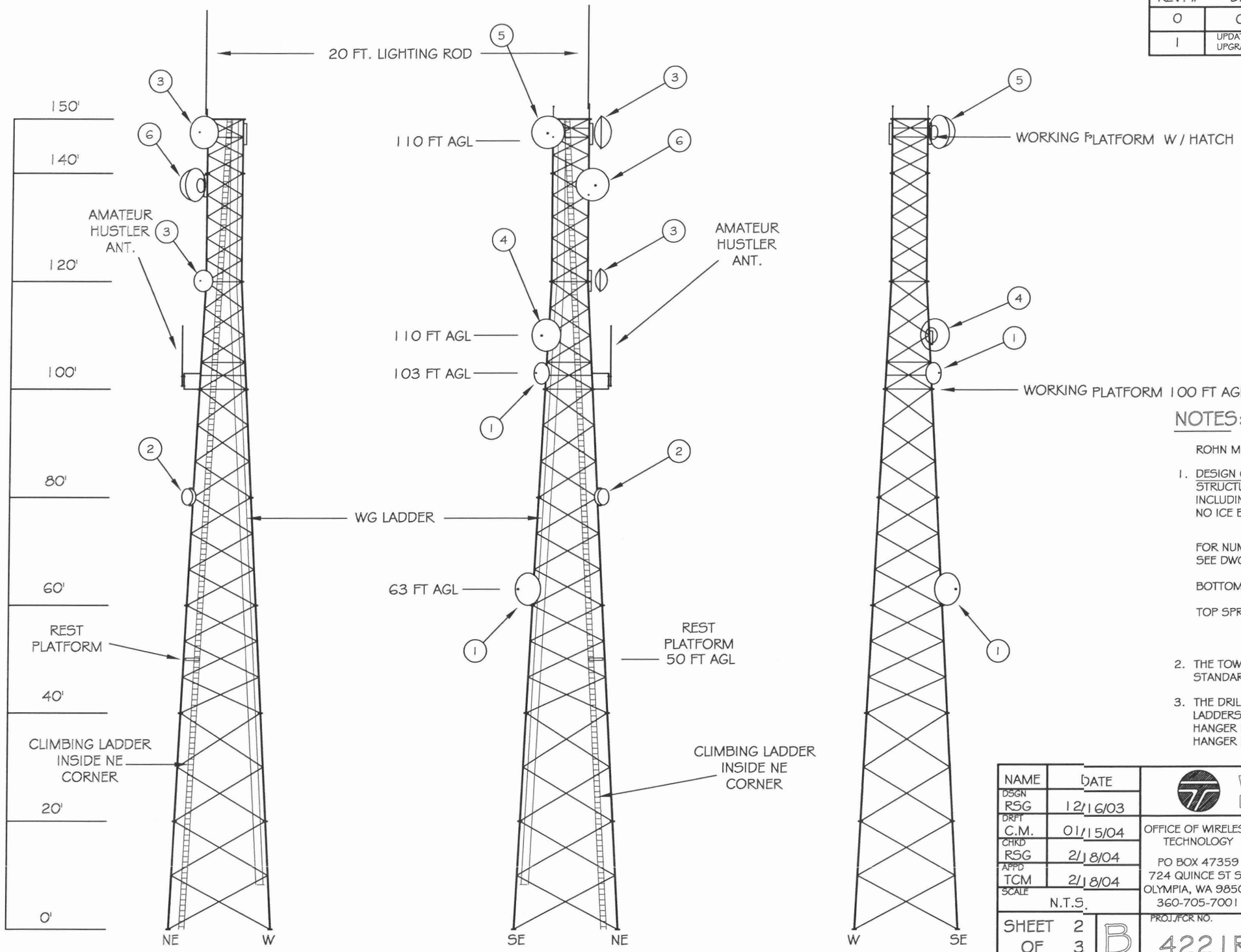

NOTES:

ROHN MODEL 150 FT SSV 3LSS TOWER

1. DESIGN CRITERIA
   STRUCTURE DESIGNED CONFORMS TO EIA/TIA-222-F INCLUDING: 100 MPH BASIC WIND SPEEDS WITH NO ICE BASED ON ROHN FILE NO. 27183AE.

   FOR NUMERAL CLARIFICATION AND DESCRIPTION, SEE DWG: 4221RA01-ANT-1, 1 OF 1

   BOTTOM SPREAD OF TOWER: 18' - 10"

   TOP SPREAD OF TOWER: 6' - 6 1/4"

2. THE TOWER CLIMBING LADDER UTILIZES A STANDARD SAFETY CLIMB CABLE SYSTEM.

3. THE DRILLED HOLES IN THE RUNGS OF THE WG LADDERS SHALL ACCEPT STANDARD SNAP-IN HANGER KITS AND STANDARD 3/8" NUT & BOLT HANGER KITS.

NAME	DATE
DSGN RSG	12/16/03
DRFT C.M.	01/15/04
CHKD RSG	2/18/04
APPD TCM	2/18/04
SCALE N.T.S.	

Washington State Department of Transportation

OFFICE OF WIRELESS TECHNOLOGY
PO BOX 47359
724 QUINCE ST SE
OLYMPIA, WA 98504
360-705-7001

DWG TITLE: TOWER ANTENNAE ELEVATIONS

SITE NAME: RADIO FACILITY
BUCKHORN MTN. WA

SHEET 2 OF 3

B

PROJ./CR NO.: 4221RA01-

DWG NO.: TWR-1

REV. #	DESCRIPTION	DATE	CHKD
0	ORIGINAL-ISSUE	12/01/92	RSG

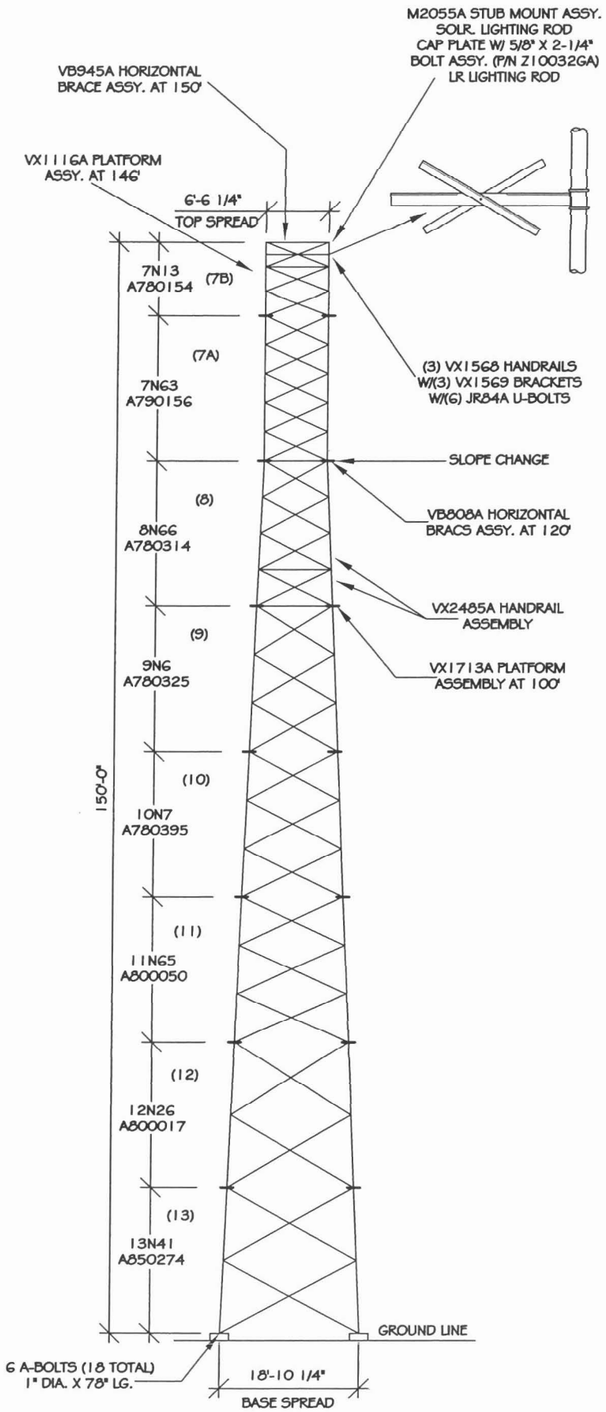

DESIGN WIND LOAD PER ANSI/EIA-222-E-191 100MPH
BASIC WIND SPEED (1/2 INCH RADIAL ICE LOAD)

TWIST & SWAY DESIGN BASED ON 960MHZ MW OPERATION
This tower is designed to support the following loads:

ELEVATION (ft.)	ANTENNA TYPE	E.P.A (SF)	
		NO ICE	WITH ICE
150	3-PD10017 ANTENNAS ON STUB MOUNTS	11.0 Total	17.0 Total
145	3-6' DIA. DISHES W/RADOMES (120° separation)	57.0 Total	57.0 Total
100	6-PD220 ANTENNAS W/6-3' SIDE ARMS	38.0 Total	68.0 Total

General Notes

1. **See indiv**idual section assembly drawings for part numbers and section assembly details.
2. Fabrication drawings, if referenced, are for shop use only.
3. Step bolts are provided on one leg only for sections 6-11, and all three legs for sections 12-16 and all MW sections.
4. PAL nuts are provided for all tower and anchor bolts (see drawing A790135).
5. The leg part number is stamped at the bottom of each leg of each section.
6. Tower design assumes level grade at tower site.
7. Work shall be in accordance with E.I.A.-222-E, "Structural Standard Steel Antenna Towers and Antenna Supporting Structures".
8. Rohn shall have the option to review final dish locations, azimuths, and mounts to verify that assumed torque valves and local stresses are not exceeded.
9. Design assumes PD type antennae are mounted as symmetrically as possible to minimize accumulated effect of torque.
10. The design assumes that antenna transmission lines and (19-hole) W/G ladders are evenly distributed over two tower faces.
11. Tower orientation and dish azimuths, determined by others, must be compatible with dish mounts provided.
12. Heavy-duty inside corner ladder with Rohn-Loc safety device w/extra safety belt is provided for climbing the entire tower height.
13. Mount one (19-hole) W/G ladder on each of 2 tower faces from 10' +/- to 150'+/- elevation. (Mount all W/G ladders on outside of the tower face).
14. Each tower leg base is anchored to 6 each 1"0 x 78" anchor bolts for the F16 foundation per Rohn drawing D870532.

Reference Drawings
(Drawings submitted are the latest versions)

Quantity	Part No.	Description	Drawing No.
N/A	REF.	Grouting & Drainage Detail	SK720305
N/A	REF.	Step Bolt Detail	BG51264
3	BGK8	Grounding Detail	C731105
N/A	REF.	Foundation & Anchor Tolerance	AB10214
N/A	REF.	Anchor Bolt Template Installation	B730521
3	135AT	Anchor Bolt Template Fab. (Top)	SK730360
3	135AB	Anchor Bolt Template Fab. (Bottom)	SK730360
N/A	ABLG4	Anchor Bolt Layout	C880726
N/A	REF.	Foundation Detail (Pier & Pad)	A911152.1-3
18	1X78AB	Anchor Bolts	N/A
N/A	REF.	Bolt Assembly Installation	A790135
1	VB945A	Horizontal Brace Assembly at 150' +/-	D880699
1	VB808A	Horizontal Brace Assembly at 120' +/-	D880698
1	RL150LAD	Rohn Loc Safety Climbing Device	C741170
1	LR	6' Aluminum Lightning Rod	C621308
1	RLBELTM	Rohn Loc Safety Belt (Extra)	N/A
3	WGB52410	10' W/G Bridge Assembly	D890736
1	ACLADHH	Anti-Climb Assembly (Ladder)	A901137
2	VY1423	Safety Clamp Rest. Assy at 104' +/- & 145 +/-	B790421
12	WL20F194KD1	20' W/G Ladder Assembly (19-hole)	C840398
4	WL10F194KD1	10' W/G Ladder Assembly (19-hole)	C840398
12	KY693	W/G Ladder Mounting Clip Assembly	C840398
24	KY695	W/G Ladder Mounting Clip Assembly	C840398
4	KY697	W/G Ladder Mounting Clip Assembly	C840398
4	KY1287A	W/G Ladder Mounting Clip Assembly	C840398
6	VY3098A	20' H.D. Inside Corner Ladder Assembly	C830242
2	VY3100A	20' H.D. Inside Corner Ladder Assembly	C830242
6	SA325PL	3' Side Arm Assembly at 102' +/-	C820355
3	520UM	Dish Mount Assembly at 145'+/-	C800121
1	VX1071A	Rest Platform Assembly at 75'+/-	C810233
1	VX1713A	Platform Assembly at 102'	C750858
1	VX1116A	Platform Assembly at 146'+/-	C810478
1	50LR	Lightning Rod Cap Plate	SK7208608
4	210032GA	5/8 x 2-1/4 Bolt Assembly	C770404
2	M2055A	Stub Mount Assembly at Top	BU731113
3	VX1568	Handrail Angle at Top	B830890
3	VX1569	Handrail Bracket at Top	B830890
6	JR84A	U-Bolt Kit Assembly (For Handrail at Top)	B651028
1	VX2485A	Handrail Assembly	B911248

TOWER REACTIONS

COMPRESSION	179.0 KIPS
TENSION	163.8 KIPS
TOTLE SHEAR	33.7 KIPS
D.T.M.	2737.6 FT. -KIPS

TUBULAR MEMBER PROPERTIES

MEMBER	SIZE	
	O.D. (IN)	THICK. (IN)
PIPE 2 STD.	2.375	0.154
PIPE 2 E.H.	2.375	0.218
PIPE 2.5 E.H.	2.875	0.276
PIPE 3 E.H.	3.500	0.300
PIPE 3.5 E.H.	4.000	0.318
PIPE 4 E.H.	4.500	0.337
PIPE 5 E.H.	5.500	0.375
PIPE 6 E.H.S.	6.525	0.340

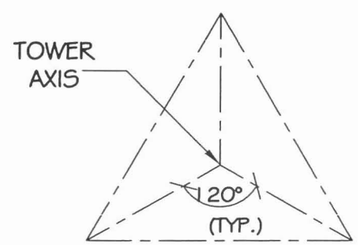

TOWER ORIENTATION DETERMINED BY OTHERS

N.T.S.

REDRAWN FROM ROHM DWG. C911238R2

NAME	DATE
DSGN RSG	12/01/92
DRFT C.M.	12/11/03
CHKD RSG	2/17/04
APPD TCM	2/18/04
SCALE N.T.S.	

Washington State Department of Transportation

OFFICE OF WIRELESS TECHNOLOGY
PO BOX 47359
724 QUINCE ST SE
OLYMPIA, WA 98504
360-705-7001

DWG TITLE: TOWER ASSEMBLY DRAWING

SITE NAME: RADIO FACILITY
BUCKHORN MTN. WA

SHEET 1 OF 1 B

PROJ./FCR NO. 4221RA01-

DWG NO. TWR-1

REV. #	DESCRIPTION	DATE	CHKD
0	ORIGINAL-ISSUE	6/19/91	RSG
1	CONVERTED TO CAD	12/08/03	RSG

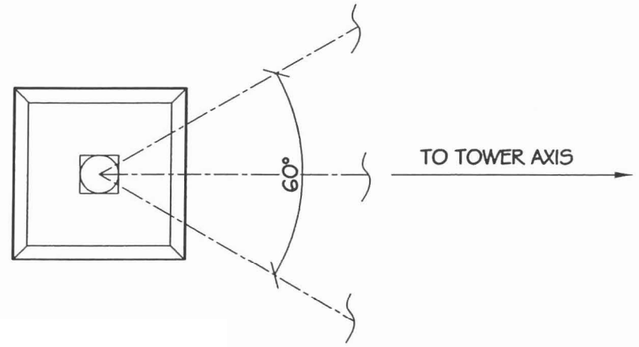

ELEVATION VIEW

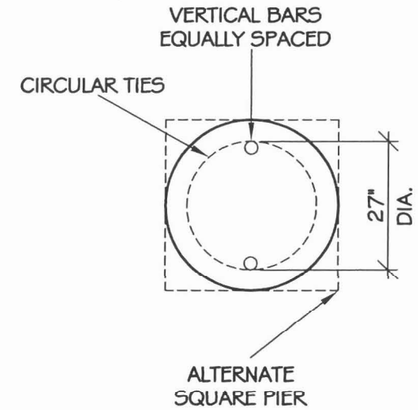

SECTION A-A

FOUNDATION SCHEDULE				
"A"	"B"	"C"	"D"	"E"
10'-0"	9'-6"	3'-0"	14'-0"	2'-0"

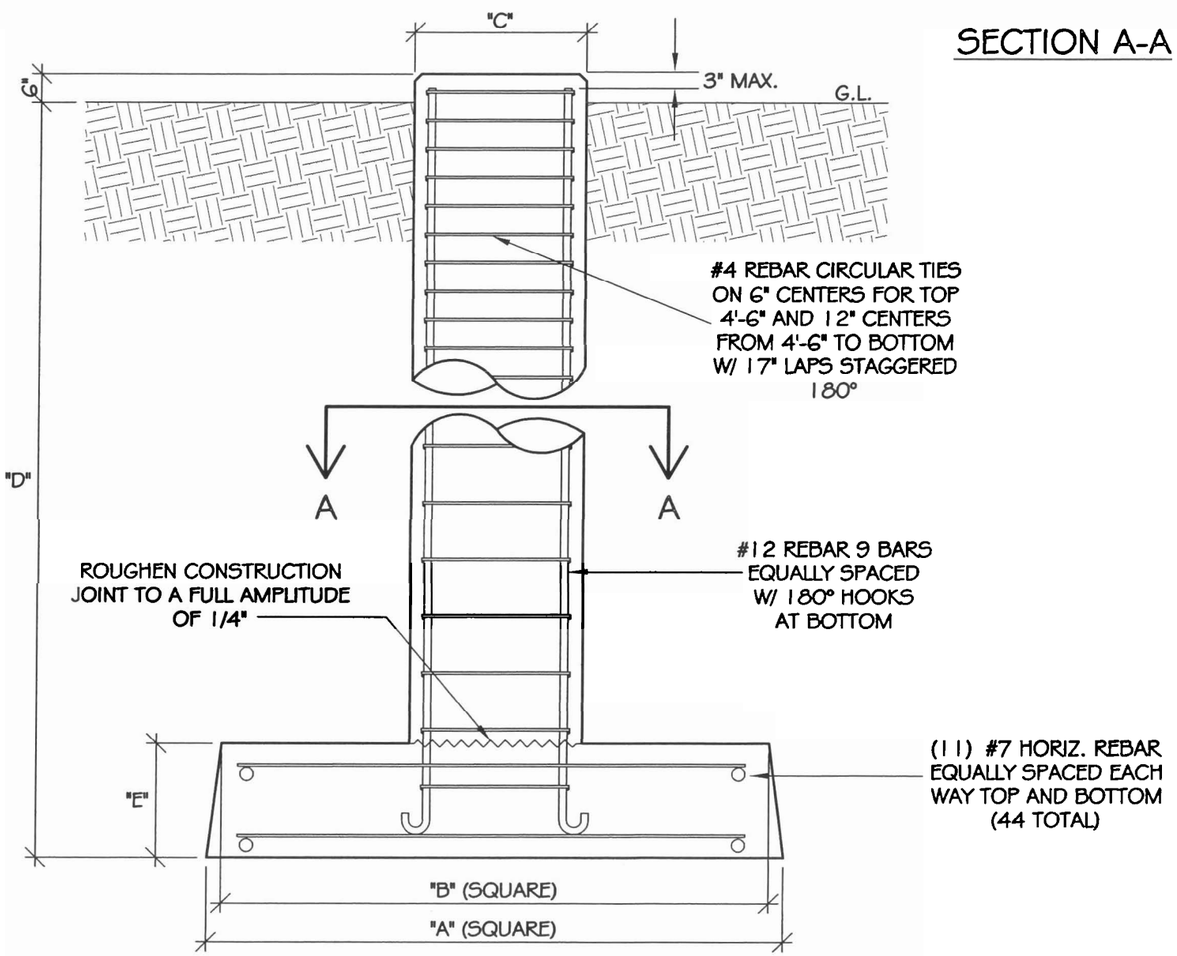

ELEVATION VIEW

NOTE:

SEE TOWER ASSEMBLY DRAWING FOR FOUNDATION LAYOUT AND ANCHORAGE EMBEDMENT DRAWING NUMBER.

VOLUME OF CONCRETE

ROUND PIER:
10.3 CU. YDS. (PER LEG)
30.9 CU. YDS. (PER 3 LEGS)

REACTIONS / LEG

UPLIFT = 163.8 KIP
DOWNLOAD = 179.0 KIP
SHEAR = 22.4 KIP

REDRAWN FROM ROHN DWG. A911152-1

NAME	DATE
DSGN RSG	6/19/91
DRFT C.M.	01/15/04
CHKD RSG	2/17/04
APPD TCM	2/18/04
SCALE 3/8"=1"	

Washington State Department of Transportation

OFFICE OF WIRELESS TECHNOLOGY
PO BOX 47359
724 QUINCE ST SE
OLYMPIA, WA 98504
360-705-7001

DWG TITLE: TOWER FOUNDATION

SITE NAME: RADIO FACILITY
BUCKHORN MTN. WA

SHEET 1 OF 2

B

PROJ./FCR NO. 4221RA01-

DWG NO. FNDN-1

FOUNDATION GENERAL NOTES:

REV. #	DESCRIPTION	DATE	CHKD
0	ORIGINAL-ISSUE	12/01/92	RSG

1. Work shall be in accordance with local codes, safety regulations and unless otherwise noted, the latest revision of ACI 318, "Building Code Requirements for Reinforced Concrete." Procedures for the protection of excavations, existing construction and utilities shall be established prior to foundation installation.

2. Concrete materials shall conform to the appropriate state requirements for exposed structural concrete.

3. Proportions of concrete materials shall be suitable for the installation method utilized and shall result in durable concrete for resistance to local anticipated aggressive actions. The durability requirements of ACI 318 Chapter 4 shall be satisfied based on the conditions expected at the site. As a minimum, concrete shall develop a minimum compressive strength of 3000 psi (20.7 MPa) in 28 days.

4. Maximum size of aggregate shall not exceed 1 inch; size suitable for installation method utilized; or 1/3 clear distance behind or between reinforcing.

5. Reinforcement shall be deformed and conform to the requirements of ASTM A615 grade 60 unless otherwise noted. Splices in reinforcement shall not be allowed unless otherwise indicated.

6. Welding is prohibited on reinforcing steel and embedments.

7. Minimum concrete cover for reinforcement shall be 3 inches (76 mm) unless otherwise noted. Approved spacers shall be used to insure a 3 inch (76mm) minimum cover on reinforcement.

8. Concrete cover from top of foundation to ends of vertical reinforcement shell not exceed 3 inches (76mm) nor be less than 2 inches (51mm).

9. Foundation design assumes structural backfill to be compacted in 8 inch (200mm) maximum layers to 95% of maximum dry density at optimum moisture content in accordance with ASTM D698. Additionally, structural backfill must have a minimum compacted unit weight of 100 pounds per cubic foot (16 kn/m^3).

10. Foundation design has been based on geotechnical report no. MS1604 dated: 6/7/91 by: Department of Highways, Washington Sate highway Commission.

11. Foundation design has been developed in accordance with generally accepted professional engineering principles and practices within the limits of the subsurface data provided. Foundation design modifications may be required in the event the following design parameters are not applicable for the subsurface conditions encountered.
    (A) Allowable bearing pressure at 14' depth = 2000 psf
    (B) Vp lift angle with vertical = 20 degrees.
    (C) Ground water table below foundation depth.

12. Foundation design assumes level grade at tower.

13. Foundation installation shall be supervised by personnel knowledgeable and experienced with the proposed foundation type. Construction shall be in accordance with generally accepted installation practices.

14. Foundation design assumes field inspections will be performed to verify that construction materials, installation methods and assumed design parameters are acceptable based on conditions existing at the site.

15. For foundation and anchor tolerances see drawing A810214.

16. Loose material shall be removed from bottom of excavation prior to concrete placement. Sides of excavation shall be rough and free of loose cuttings.

17. Concrete shall be placed in a manner that will prevent segregation of concrete materials, infiltration of water or soil and other occurrences which may decrease the strength or durability of the foundation.

18. Construction joints, if required in piers, must be at least 12 inches (305mm) below bottom of embedments and must be intentionally roughned to a full amplitude of 1/4 inch (6mm). Foundation design assumes no other construction joints.

19. Top of foundation outside limits of anchor bolts shall be sloped to drain with a floated finish. Area inside limits of anchor bolts shall be level with a scratched finish.

20. Exposed edges of concrete shall be chamfered 3/4" x 3/4" (19mm x 19mm) minimum.

SECTION NUMBER SCHEDULE

SECTOIN	LEG					BRACE				
	SIZE	MAXIMUM TENSION/ COMPRESSION LOAD (KIPS)	MAXIMUM TENSION/ COMPRESSION CAPACITY (KIPS)	BOLTED FLANGE CONNECTION NO.	BOLTED FLANGE CONNECTION SIZE (IN.)	SIZE	MAXIMUM LOAD (KIPS)	MAXIMUM CAPACITY (KIPS)	END CONNECTION NO.	END CONNECTION (IN.)
7B	PIPE 2 STD	6.07	33.73	4	5/8	L 1.5 X 1/8	2.07	2.91	1	1/2
7A	PIPE 2 E.H.	30.84	46.02	4	5/8	L 1.5 X 3/16	3.35	3.74	1	1/2
8	PIPE 2.5 E.H.	52.66	68.52	4	3/4	L 1.75 X 1/8	3.05	3.29	1	1/2
9	PIPE 3 E.H.	78.47	87.12	4	7/8	L 2 X 2 X 3/16	3.75	4.31	1	1/2
10	PIPE 3.5 E.H.	103.65	113.57	4	7/8	L 2.5 X 3/16	4.27	5.44	1	1/2
11	PIPE 4 E.H.	128.75	142.37	4	1	L 2 X 1/2 X 1/4	4.95	6.73	1	1/2
12	PIPE 5 E.H.	153.84	181.57	4	1	L 3 X 3 X 1/4	5.87	7.98	1	5/8
13	PIPE 6 E.H.	178.99	214.57	5	1	L 3.5 X 1/4	6.31	8.59	1	5/8

NOTE: SECTION NUMBERS ARE FOR REFERENCE ONLY

REDRAWN FROM ROHN DWG. A911152-2 & A911152-3

TUBULAR MEMBER PROPERTIES

MEMBER	SIZE O.D. (IN.)	SIZE THICK. (IN.)
PIPE 2 STD	2.375	0.154
PIPE 2 E.H.	2.375	0.218
PIPE 2.5 E.H.	2.875	0.276
PIPE 3 E.H.	3.500	0.300
PIPE 3.5 E.H.	4.000	0.318
PIPE 4 E.H.	4.500	0.337
PIPE 5 E.H.	5.500	0.375
PIPE 6 E.H.	6.625	0.340

	NAME	DATE
DSGN	RSG	12/01/92
DRFT	C.M.	01/15/04
CHKD	RSG	2/17/04
APPD	TCM	2/18/04
SCALE		

SHEET 2 OF 2

B

Washington State Department of Transportation

OFFICE OF WIRELESS TECHNOLOGY
PO BOX 47359
724 QUINCE ST SE
OLYMPIA, WA 98504
360-705-7001

DWG TITLE: TOWER FOUNDATION

SITE NAME: RADIO FACILITY
BUCKHORN MT. WA

PROJ./FCR NO.: 4221RA01-

DWG NO.: FNDN-1

REV. #	DESCRIPTION	DATE	CHKD
0	ORIGINAL-ISSUE	10/31/03	RSG

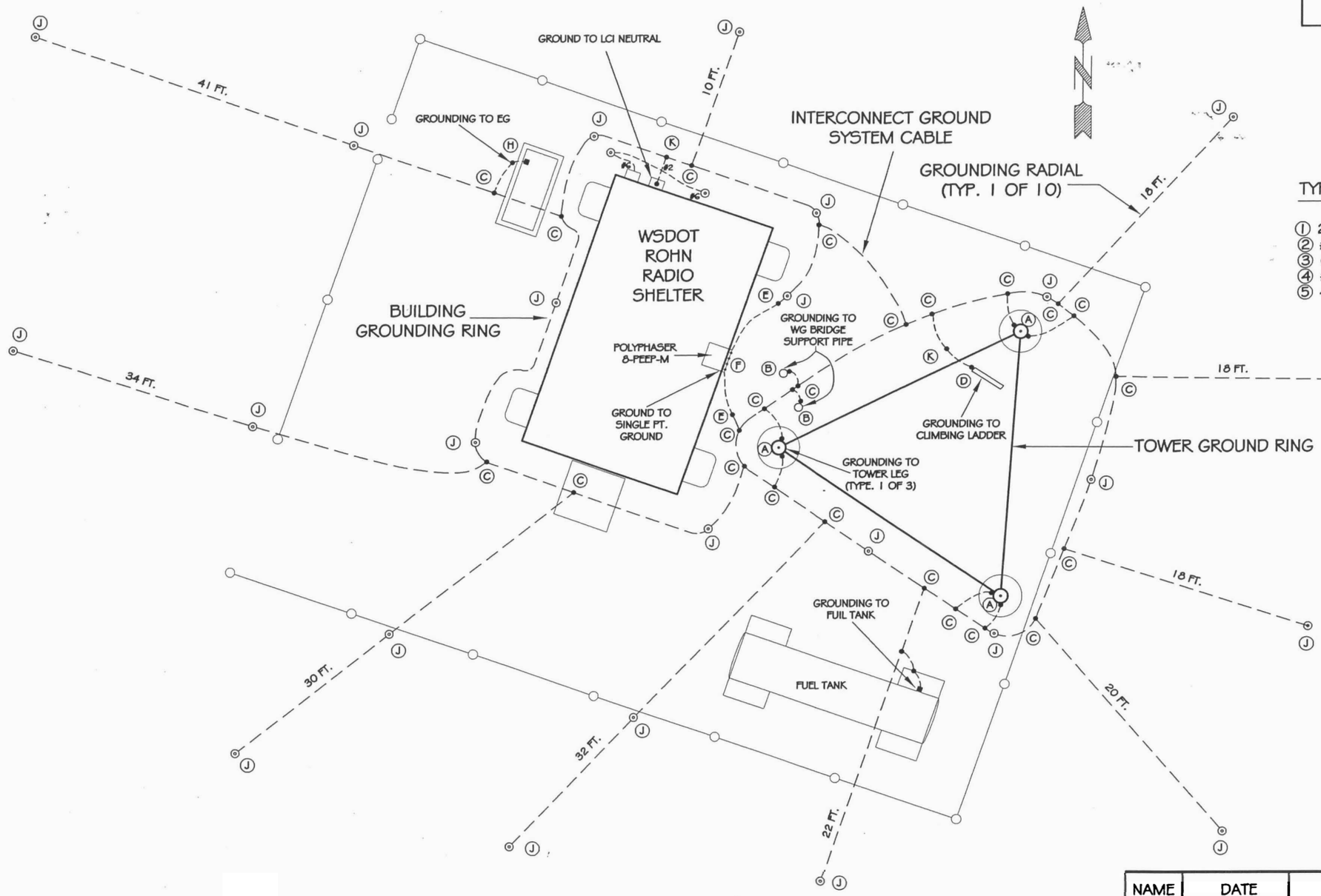

TYPE OF GROUNDING MATERIALS

1. 2/0-19 BARE 19-STRANDED COPPER CABLE
2. #2 BARE SOLID COPPER TINNED CLAD GROUND CABLE
3. 6" WIDE SOLID COPPER FLATSTRAP 26 GA.
4. #2 STRANDED COPPER GRN. JACKETED GROUND CABLE
5. 4/0-19 BARE 19- STRANDED COPPER CABLE

NOTES:

- 5/8" X 10' COPPER CLAD STEEL GROUND ROD
- EXOTHERMIC MOLECULAR (CAD WELD) BOND
- 2/0-19 BARE STRANDED COPPER 19-STRAND GROUND CABLE BURIED MIN. 2 FT.
- 6" WIDE 26 GA. SOLID COPPER FLATSTRAP BURIED VERTICALLY MIN. 2 FT.
- MECHANICAL COMPRESSION BOND (FLAT-FLAT W/CONDUCTIVE JOINT COMPOUND)
- TYPE OF ERICO CADWELD MOLD AND WELD METAL

ALL CABLE BENDS SHALL BE GRADUAL, 8 INCH MIN. BENDING RADIUS.

NAME	DATE
DSGN RSG	10/31/03
DRFT C.M.	12/11/03
CHKD RSG	2/18/04
APPD TCM	2/18/04
SCALE 1/8"=1'-0"	

Washington State Department of Transportation

OFFICE OF WIRELESS TECHNOLOGY
PO BOX 47359
724 QUINCE ST SE
OLYMPIA, WA 98504
360-705-7001

DWG TITLE: EXTERIOR SITE GROUNDING PLAN

SITE NAME: RADIO FACILITY
BUCKHORN MTN. WA

SHEET 1 OF 4 | B

PROJ./FCR NO.: 4221RA01-

DWG NO.: GND-1

REV. #	DESCRIPTION	DATE	CHKD
0	ORIGINAL-ISSUE	10/31/03	RSG

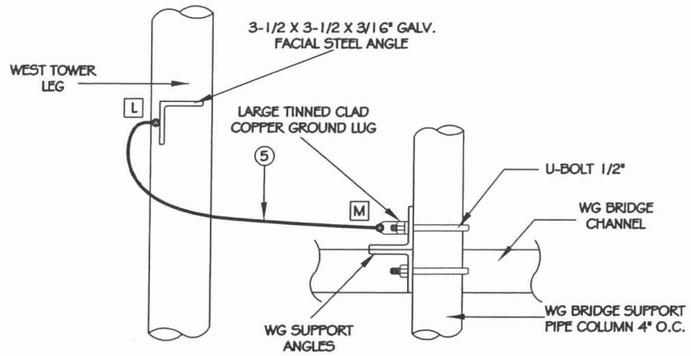

TOWER TO WG BRIDGE GROUNDING

N.T.S.

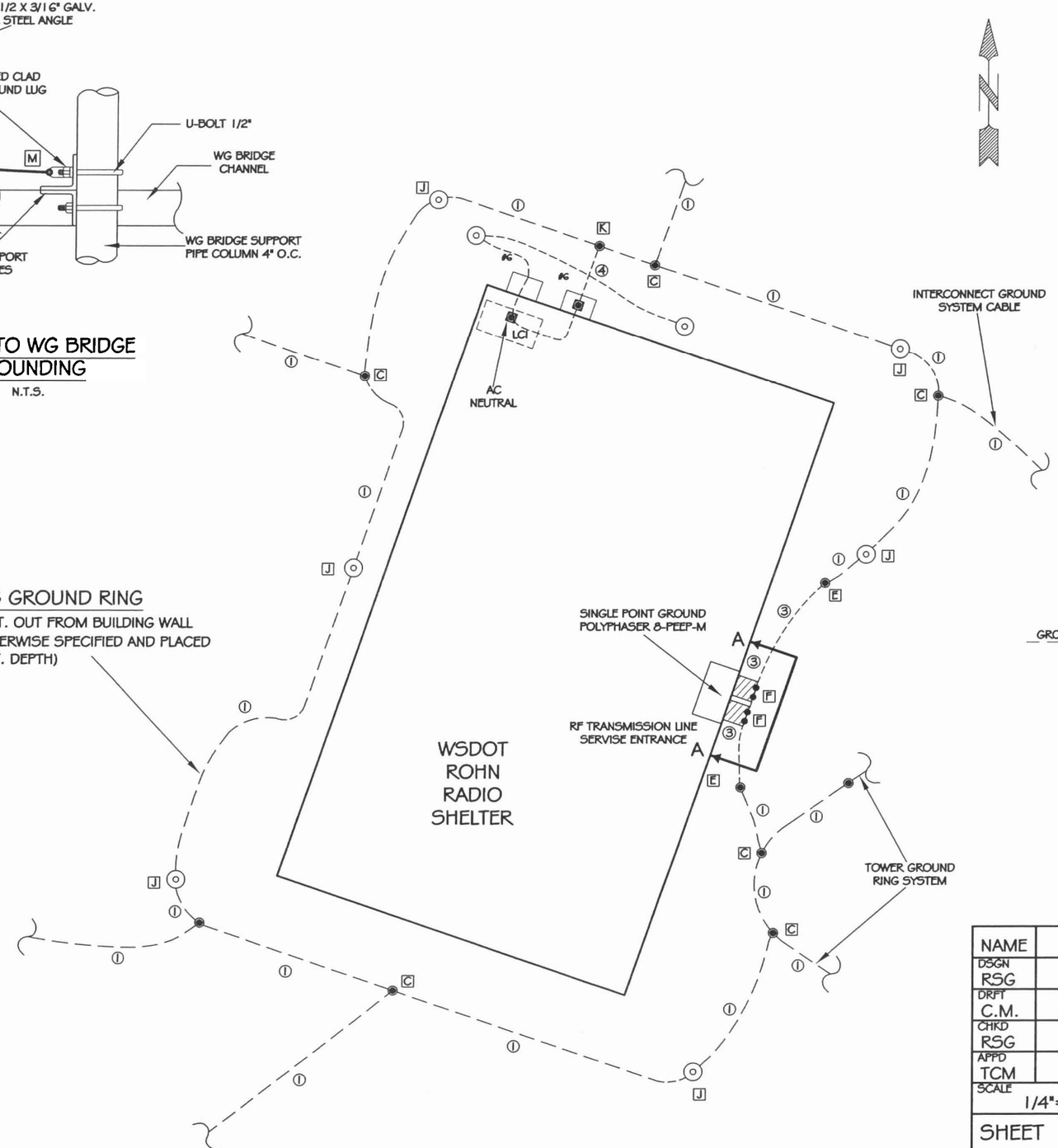

BUILDING GROUND RING

(PLACED 2 FT. OUT FROM BUILDING WALL UNLESS OTHERWISE SPECIFIED AND PLACED AT MIN. 2 FT. DEPTH)

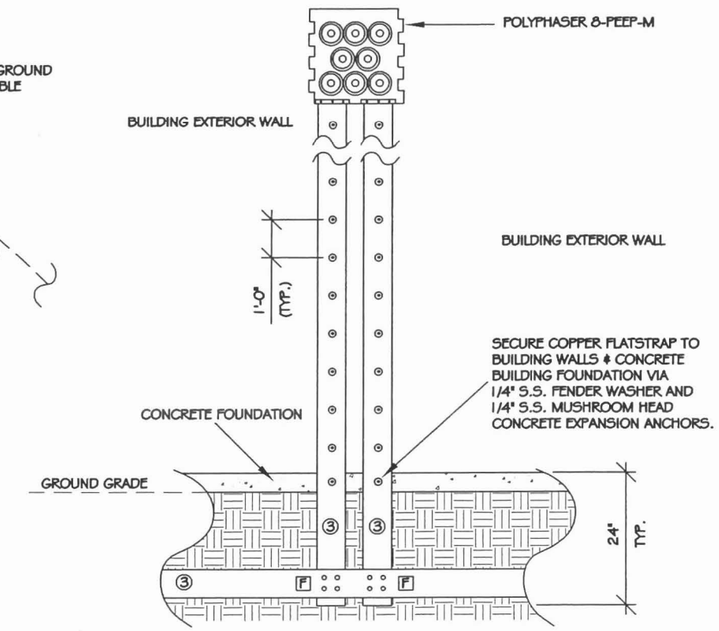

SECTION A-A

N.T.S.

NAME	DATE
DSGN RSG	10/31/03
DRFT C.M.	12/15/03
CHKD RSG	2/18/04
APPD TCM	2/18/04
SCALE 1/4"=1'-0"	

Washington State Department of Transportation

OFFICE OF WIRELESS TECHNOLOGY
PO BOX 47359
724 QUINCE ST SE
OLYMPIA, WA 98504
360-705-7001

DWG TITLE: EXTERIOR SITE GROUNDING PLAN

SITE NAME: RADIO FACILITY
BUCKHORN MTN. WA

SHEET 2 OF 4 | B | PROJ./FCR NO. 4221RA01- | DWG NO. GND-1

REV. #	DESCRIPTION	DATE	CHKD
0	ORIGINAL-ISSUE	10/31/03	RSG

VS

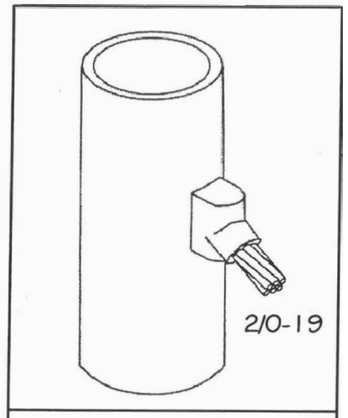

CADWELD CONNECTION,
2/0 COPPER CABLE TO 6"-10" VERTICAL PIPE,
MOLD VSC2GV3C, WELDMETAL 90

VS

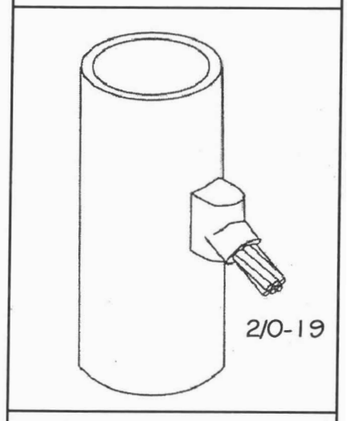

CADWELD CONNECTION,
2/0 COPPER CABLE TO 2"-4" VERTICAL PIPE,
MOLD VSC2GV3C, WELDMETAL 90

TA

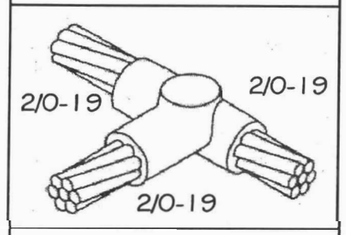

CADWELD CONNECTION,
2/0 CABLE RUN TO 2/0 CABLE TAP,
MOLD TAC2G2G, WELDMETAL 90

VS

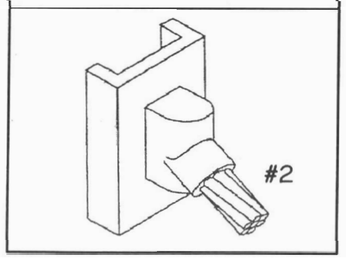

CADWELD CONNECTION,
#2 COPPER CABLE TO FLAT SURFACE,
MOLD VSC1V, WELDMETAL 45

LJC

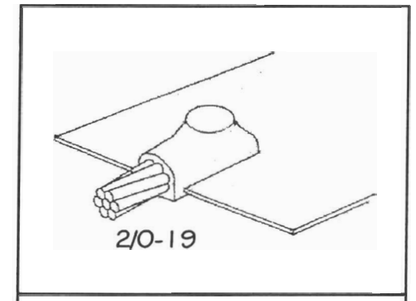

E CADWELD CONNECTION,
2/0 COPPER CABLE TO SOLID COPPER
FLATSTRAP 26GA, MOLD L JC2G006,
WELDMETAL 65

TWR

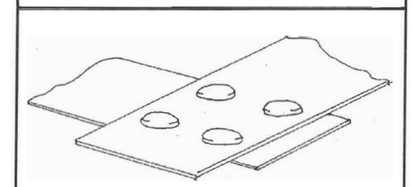

F CADWELD CONNECTION,
SOLID COPPER STRAP 26GA TO SOLID COPPER
STRAP 26GA, MOLD TWR107A3, WELDMETAL 32

VV

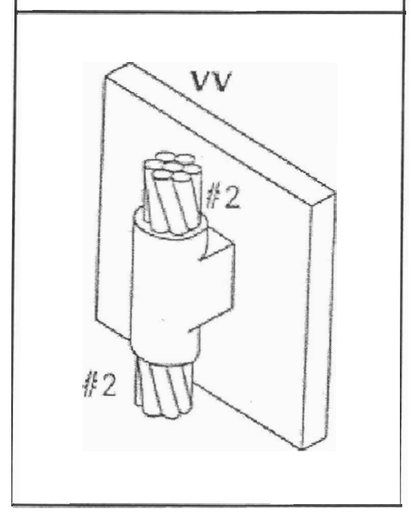

CADWELD CONNECTION,
#2 COPPER CABLE TO VERTICAL FLAT SURFACE,
MOLD VVCIT, WELDMETAL 115

NAME	DATE
DSGN RSG	10/31/03
DRFT C.M.	12/15/03
CHKD RSG	2/10/04
APPD TCM	2/18/04
SCALE	

Washington State Department of Transportation

OFFICE OF WIRELESS TECHNOLOGY
PO BOX 47359
724 QUINCE ST SE
OLYMPIA, WA 98504
360-705-7001

DWG TITLE: EXTERIOR SITE GROUNDING PLAN

SITE NAME: RADIO FACILITY
BUCKHORN MTN. WA

SHEET 3 OF 4 | B | PROJ./FCR NO. 4221RA01- | DWG NO. GND-1

REV. #	DESCRIPTION	DATE	CHKD
0	ORIGINAL-ISSUE	10/31/03	RSG

SS

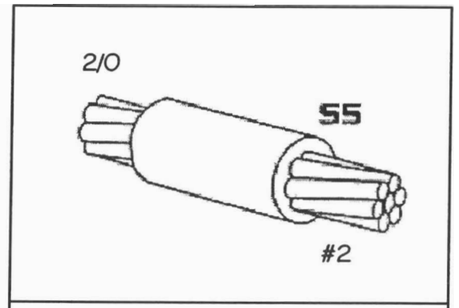

H CADWELD CONNECTION,
2/0 COPPER CABLE TO 2/0 COPPER CABLE,
MOLD SSC1T2G, WELDMETAL 45

GT

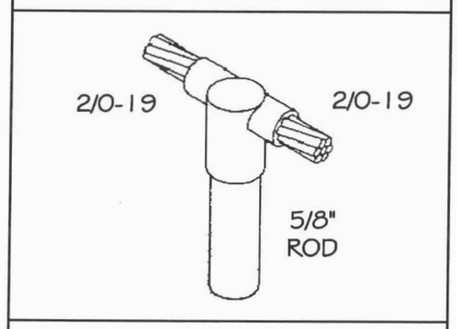

J CADWELD CONNECTION,
2/0 AWG CONC. COPPER CABLE TO 5/8 CAP
CLAD ROD MOLD GTC162G, WELDMETAL 115

TA

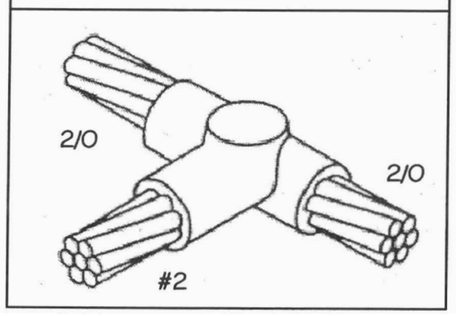

K CADWELD CONNECTION,
2/0 CABLE RUN TO #2 CABLE TAP,
MOLD TAC2G1V, WELDMETAL 45

VS

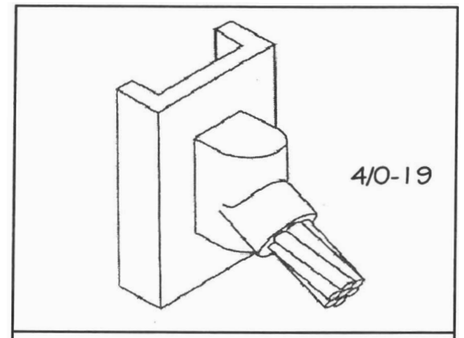

L CADWELD CONNECTION,
4/0 COPPER CABLE TO 8"-10" VERTICAL STEEL
SURFACE, MOLD VSC2Q, WELDMETAL 115

LA

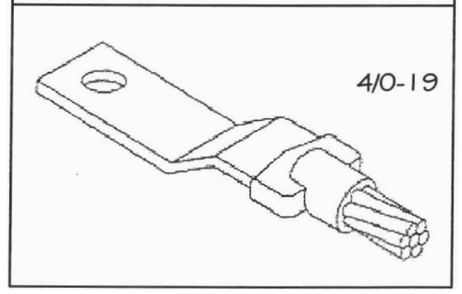

M CADWELD CONNECTION,
4/0 COPPER CABLE TO COPPER LVG,
MOLD LAC2QDE, WELDMETAL 90

NAME	DATE
DSGN RSG	10/31/03
DRFT C.M.	12/15/03
CHKD RSG	2/17/04
APPD TCM	2/18/04
SCALE	

Washington State Department of Transportation

OFFICE OF WIRELESS TECHNOLOGY
PO BOX 47359
724 QUINCE ST SE
OLYMPIA, WA 98504
360-705-7001

DWG TITLE: EXTERIOR SITE GROUNDING PLAN

SITE NAME: RADIO FACILITY
BUCKHORN MTN. WA

SHEET 4 OF 4 | B | PROJ./FCR NO. 4221RA01- | DWG NO. GND-1